NOTES:

1. SITE B WELL AND PIPELINE FROM SITE B TO HNWR-1A WELL IS CONTINGENT AND MAY BE CONSTRUCTED.
2. HYDRAULIC PROFILE BASED ON CALCULATIONS AND SUBJECT TO CHANGE DEPENDING ON FIELD CONDITIONS.
3. DEPTH OF NEW WELLS ARE APPROXIMATE AND WILL BE DETERMINED DURING CONSTRUCTION.

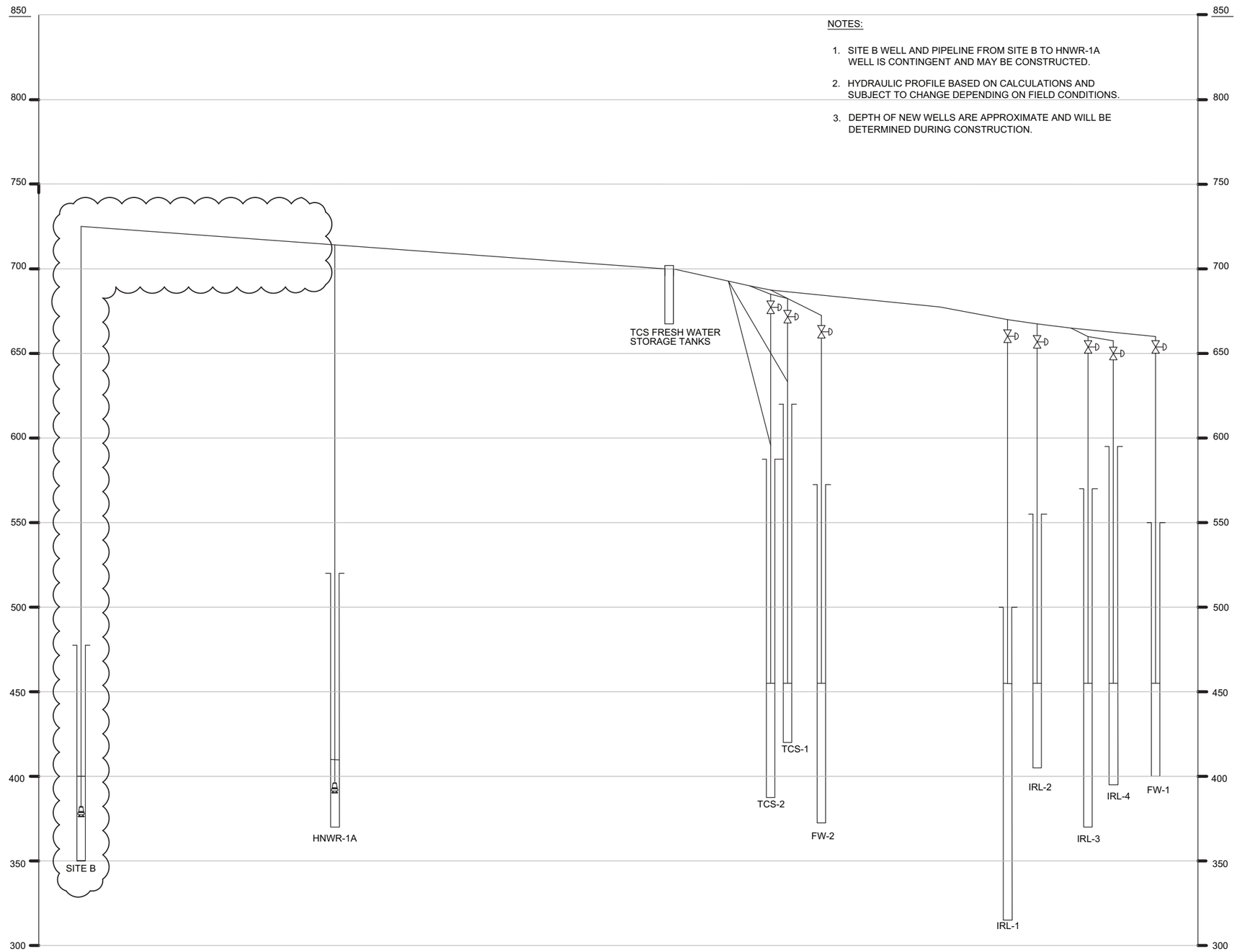

DRAFT
NOT FOR
CONSTRUCTION

E2 Consulting Engineers, Inc.
1900 Powell Street, Ste. 250
Emeryville, CA 94608
(510) 652-1164

CH2MHILL.

NO.	DATE	DESCRIPTION	GM/SPEC	DWN	CHKD	SUPV	APVD BY
2	9/8/14	PRE-FINAL (90%) DESIGN		PH	PT	VMB	VMB
1	4/5/13	INTERMEDIATE (60%) DESIGN		PC	PC	PT	VMB
0	11/18/11	PRELIMINARY (30%) DESIGN		PC	PC	PT	VMB

REVISIONS

APPROVED BY
SO
SUPV VMB
DSGN PT
DWN PC
CHKD VMB
OK VMB
DATE 09/08/14
SCALES N.T.S.

TOPOCK GROUNDWATER REMEDIATION PROJECT
HYDRAULIC PROFILE
FRESHWATER INJECTION SYSTEM
GAS TRANSMISSION & DISTRIBUTION
PACIFIC GAS AND ELECTRIC COMPANY
SAN FRANCISCO, CALIFORNIA

MICROFILM
BILL OF MATL
DWG LIST
SUPSDS
SUPSD BY
SHEET NO. of SHEETS
G-07-01
REV 2

FILENAME: E2-G-XXX-0701.d
PLOT DATE: PLOTDATE PLOT TIME: PLOTTIME

N1808

C:\Users\peter.hubbard\CAD\Topock\E2-G-XXX-0701.dwg, 22X34, 8/21/2014 7:30:38 AM

NOTES:

1. HYDRAULIC PROFILE BASED ON CALCULATIONS AND SUBJECT TO CHANGE DEPENDING ON FIELD CONDITIONS.
2. DEPTH OF NEW WELLS ARE APPROXIMATE AND WILL BE DETERMINED DURING CONSTRUCTION.

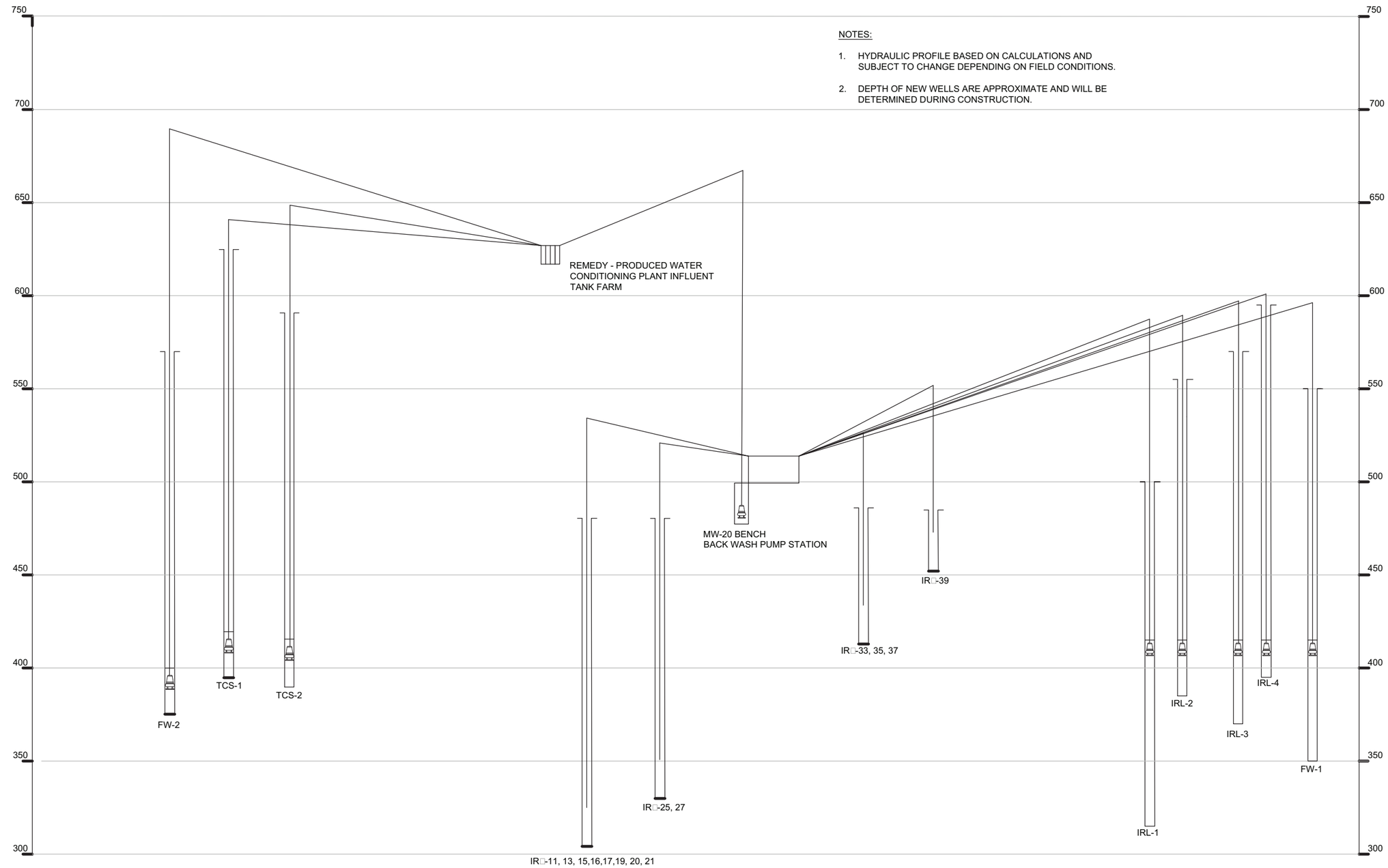

DRAFT
NOT FOR
CONSTRUCTION

E2 Consulting Engineers, Inc.
1900 Powell Street, Ste. 250
Emeryville, CA 94608
(510) 652-1164

CH2MHILL.

NO.	DATE	DESCRIPTION	GM/SPEC	DWN	CHKD	SUPV	APVD BY
2	9/8/14	PRE-FINAL (90%) DESIGN		PH	PT	VMB	VMB
1	4/5/13	INTERMEDIATE (60%) DESIGN		PC	PC	PT	VMB
0	11/18/11	PRELIMINARY (30%) DESIGN		PC	PC	PT	VMB

REVISIONS

APPROVED BY
SO
SUPV VMB
DSGN PT
DWN PC
CHKD VMB
OK VMB
DATE 09/08/14
SCALES NTS

TOPOCK GROUNDWATER REMEDIATION PROJECT
HYDRAULIC PROFILE
REMEDY-PRODUCED
WATER SYSTEM
GAS TRANSMISSION & DISTRIBUTION
PACIFIC GAS AND ELECTRIC COMPANY
SAN FRANCISCO, CALIFORNIA

MICROFILM
BILL OF MATL
DWG LIST
SUPSDS
SUPSD BY
SHEET NO. of SHEETS
G-07-02
REV 2

FILENAME: E2-G-XXX-0702.d□□
PLOT DATE: PLOTDATE PLOT TIME: PLOTTIME

N1808

C:\Users\peter.hubbard\CAD\Topock\E2-G-XXX-0702.dwg, 22X34, 8/18/2014 10:52:38 AM

FOR CONTINUATION SEE INSET BELOW

NATIONAL TRAIL HWY

PIPELINE "C"

PIPELINE "G"

PIPELINE "A"

PIPELINE "H"

BNSF RAILROAD

COLORADO RIVER

MOHAVE COUNTY HIGHWAY 10

PIPELINE "B"

NATIONAL TRAIL HWY

PIPELINE "E"

PIPELINE "F"

PG& E TOPOCK COMPRESSOR STATION

PIPELINE "N"

PIPELINE "T"

PIPELINE "M"

PIPELINE "P"

PIPELINE "I"

PIPELINE "L"

PIPELINE "K"

PIPELINE "D"

TCS

PIPE 300 ACCESS ROAD

TCS MAIN ACCESS ROAD

PIPELINE "J"

PIPELINE "C-18"

ARCH BRIDGE

COLORADO RIVER

C-07-20 C-07-21 C-07-22 C-07-23 C-07-24 C-07-25 C-07-26 C-07-27 C-07-28 C-07-29 C-07-30 C-07-31 C-07-32 C-07-33 C-07-34 C-07-35 C-07-36 C-07-37 C-07-39 C-07-40 C-07-41 C-07-42 C-07-43 C-07-44 C-07-45 C-07-46 C-07-47 C-07-48 C-07-49 C-07-50 C-07-51 C-07-52 C-07-53 C-07-54 C-07-55 C-07-56 C-07-57 C-07-58 C-07-59 C-07-68 C-07-69 C-07-70 C-07-71 C-07-72 C-07-73 C-07-74 C-07-75 C-07-76 C-07-77 C-07-78 C-07-79 C-07-80 C-07-81

INSET

PIPELINE KEY MAP

1" = 300'

0 300 600

SCALE: 1"=300'

LEGEND

- ABOVE GROUND PIPE
- UNDERGROUND PIPE
- B&J BORE AND JACK PIPE
- ON EXISTING BRIDGE

- PIPELINE "A"
- PIPELINE "B"
- PIPELINE "C"
- PIPELINE "D"
- PIPELINE "E"
- PIPELINE "F"
- PIPELINE "G"
- PIPELINE "H"
- PIPELINE "I"
- PIPELINE "J"
- PIPELINE "K"
- PIPELINE "L
- PIPELINE "M"
- PIPELINE "N"
- PIPELINE "P"
- PIPELINE "T"

DRAFT NOT FOR CONSTRUCTION

E2 Consulting Engineers, Inc.
1900 Powell Street, Ste. 250
Emeryville, CA 94608
(510) 652-1164

CH2MHILL.

NO.	DATE	DESCRIPTION	GM/SPEC	DWN	CHKD	SUPV	APVD BY
2	9/8/14	PRE-FINAL (90%) DESIGN		PH	VMB	VMB	VMB
1	4/5/13	INTERMEDIATE (60%) DESIGN		PC	VMB	VMB	VMB
0	11/11/11	PRELIMINARY (30%) DESIGN		PC	VMB	VMB	VMB

REVISIONS

APPROVED BY: SO; SUPV VMB; DSGN PT; DWN PC; CHKD VMB; OK VMB; DATE 09/08/14; SCALES 1"=300'

TOPOCK GROUNDWATER REMEDIATION PROJECT

PIPELINE KEY MAP

GAS TRANSMISSION & DISTRIBUTION
PACIFIC GAS AND ELECTRIC COMPANY
SAN FRANCISCO, CALIFORNIA

MICROFILM
BILL OF MATL
DWG LIST
SUPSDS
SUPSD BY
SHEET NO. of SHEETS
C-07-01 REV 2

FILENAME: E2-C-XXX-0701.dwg

PLOT DATE: PLOTDATE PLOT TIME: PLOTTIME

N1808

C:\Users\peter.hubbard\CAD\Topock\E2-C-XXX-0701.dwg, 22X34, 8/26/2014 5:52:01 PM

FOR CONTINUATION SEE INSET BELOW

NATIONAL TRAIL HWY

COLORADO RIVER

MOHAVE COUNTY HIGHWAY 10

BNSF RAILROAD

BNSF RAILROAD

NATIONAL TRAIL HWY

PG E TOPOCK
COMPRESSOR STATION
APPROX. BOUNDARY

ARCH BRIDGE

COLORADO RIVER

PIPE 300 ACCESS ROAD

TCS MAIN ACCESS ROAD

INSET

LEGEND

- ABOVE GROUND PIPE
- UNDERGROUND PIPE
- BORE AND JACK PIPE
- ON EXISTING BRIDGE

- PIPELINE "A"
- PIPELINE "B"
- PIPELINE "C"
- PIPELINE "D"
- PIPELINE "E"
- PIPELINE "F"
- PIPELINE "G"
- PIPELINE "H"
- PIPELINE "I"
- PIPELINE "J"
- PIPELINE "K"
- PIPELINE "L"
- PIPELINE "M"
- PIPELINE "N"
- PIPELINE "P"
- PIPELINE "T"

PIPELINE SEGMENT MAP

1" = 300'

0 300 600

SCALE: 1"=300'

DRAFT
NOT FOR
CONSTRUCTION

E2 Consulting Engineers, Inc.
1900 Powell Street, Ste. 250
Emeryville, CA 94608
(510) 652-1164

CH2MHILL.

NO.	DATE	DESCRIPTION	GM/SPEC	DWN	CHKD	SUPV	APVD BY
2	9/8/14	PRE-FINAL (90%) DESIGN		PH	VMB	VMB	VMB
1	4/5/13	INTERMEDIATE (60%) DESIGN		PH	VMB	VMB	VMB
0	11/18/11	PRELIMINARY (30%) DESIGN		PC	VMB	VMB	VMB

REVISIONS

APPROVED BY
SO
SUPV VMB
DSGN PT
DWN PC/PH
CHKD PT
OK PT VMB
DATE 09/08/14
SCALES

TOPOCK GROUNDWATER REMEDIATION PROJECT

PIPELINE SEGMENT MAP

GAS TRANSMISSION & DISTRIBUTION
PACIFIC GAS AND ELECTRIC COMPANY
SAN FRANCISCO, CALIFORNIA

MICROFILM
BILL OF MATL
DWG LIST
SUPSDS
SUPSD BY
SHEET NO. of SHEETS
C-07-02
REV 2

FILENAME: E2-C-XXX-0702
PLOT DATE: PLOTDATE PLOT TIME: PLOTTIME

C:\Users\peter.hubbard\CAD\Topock\E2-C-XXX-0702.dwg, 11X17, 8/26/2014 5:53:08 PM

Pipe Section No.	Plan and Profile Sht	Trench Section Sht/Detail	Beg Sta	End Sta	Total Length	Construction Method: UT	CT	AG	BJ	BA	Pipe Service (Diameter in inches): FW	RW	BW	TW	TWB	CA	EX	IRZ	ELECT 480V	ELECT 12kV	FO	PROV	SPARE W	SPARE FO	ACID	CAU	COAG	DR	SL	CW	WS	UA	FRW	SC	IA	GRIT
A1	C-07-20	C-07-100/A1	12+50	18+61	611	611					6	6							2		2		6	2												
A2	C-07-20,21	C-07-100/A2	18+61	21+50	289		289				6	6							4		2			2												
A3	C-07-21	C-07-100/A3	21+50	23+06	156		156				2 - 6	6				6			2 - 2	4 (Encased)	4, 2 - 2			2												
A4	C-07-21	C-07-100/A4	23+06	26+91	385		385				2 - 6	6				6			2	4 (Encased)	4, 2			2												
A5	C-07-21	C-07-100/A5	26+91	28+40	149	149					2 - 6	6				6			2	4 (Encased)	4, 2		6	2												
A6	C-07-21,22	C-07-100/A6	28+40	31+37	297	297					2 - 6	8				6				4 (Encased)	4		8	4												
A6	C-07-22	S-07-04	31+37	33+17	180					180	2 - 6	8				6				4	4															
A6	C-07-22	C-07-100/A6	33+17	35+51	234	234					2 - 6	8				6				4 (Encased)	4		8	4												
A7	C-07-22	C-07-101/A7	35+51	37+21	170		170				2 - 6	8				6				4 (Encased)	4			4												
A6	C-07-22,23	C-07-100/A6	37+21	54+93	1772	1772					2 - 6	8				6				4 (Encased)	4		8	4												
B1	C-07-26,27	C-07-103/B1	3+05	20+43	1738	1738					12									Buried Cable			6													
B2	C-07-27,28	C-07-103/B2	20+43	30+50	1007	1007					12												6													
B3	C-07-29	C-07-83	30+50	40+18	968					968	12																									
B4	C-07-30	C-07-101/B4	40+18	43+30	312	312					12																									
B5	C-07-30	C-07-101/B5	43+30	45+15	185				185		12																									
B4	C-07-30	C-07-101/B4	45+15	46+63	148	148					12																									
B6	C-07-30	C-07-101/B6	46+63	48+12	149	149					12																									
B4	C-07-30,31,32,33	C-07-101/B4	48+12	77+35	2923	2923					12																									
B4	C-07-33,34,35,36,37	C-07-101/B4	77+35	109+10	3175	3175					12																									
B7	C-07-37	C-07-09/6	109+10	110+10	100	100					12																									
B4	C-07-37	C-07-101/B4	110+10	112+59	249	249																														
C1	C-07-39	C-07-108	10+00	10+39	39	39											6		2, 2		2		6	2												
C2	C-07-39	C-07-108	10+39	13+11	272	272							2				6	4	2, 2, 2, 2,3,3,3		2		6	2												
C3	C-07-39,40,41	C-07-108	13+11	21+22	811	811							2				6, 6	6	2,2,2,2,2,2,2,2,3,3,3	YES	2		6	2												
C4	C-07-41	C-07-108	21+22	22+75	153	153					8,8,8		6, 2				6, 6	6	2,2,2	YES	2		6, 6	2												
C5	C-07-43,44	C-07-108	10+00	18+98	898	898					8, 8	6	2	2	6		6, 4	6	2,2,2,2	YES	2		6, 6, 6, 6	2									6	10		
C6	C-07-41	C-07-108	22+75	26+00	325	325					2, 8, 8	6	6, 2, 2	2	6		6, 6	6, 6	2,2,2,2,2,2,3	YES	2	3x6"	6,6,6,6,6,6	2									6	10		
C7	C-07-44	C-07-73/G	18+98	20+48	150	150					8, 8	6	2	2	6			6	3,3,3,3,3,3	YES	2	3x6"	6, 6, 6, 6	2									6	10		
C8	C-07-44,45,46	C-07-74/A	20+48	27+00	652	652					8, 8	6	2	2	6			4		YES	2	3x6"	6, 6, 6, 6	2									6	10		
C9	C-07-46	C-07-74/B	27-00	28+88	188				188		8, 8	6	2	2	6			4		YES	2	3x6"	6, 6, 6, 6	2									6	10		
C8	C-07-46	C-07-74/A	28+88	29+50	62	62					8, 8	6	2	2	6			4		YES	2	3x6"	6, 6, 6, 6	2									6	10		
C10	C-07-47	C-07-74/C	29+50	30+55	105	105					8, 8	6		2	6		4		2,2	YES	2	3x6"	6, 6, 4	2									6			
C11	C-07-47,48	C-07-74/E	30+55	38+93	838	838											2		2,2,2,2,2	YES	2			2												
C13	C-07-42	C-07-74/G	10+25	12+70	245		245					2	2					6	4 x 2		2		4													
C14	C-07-49,50	C-07-75/1	10+00	14+50	450	450						2	2				6	4	3,3,3,3,3,3,2,2,2,2	YES	2		4	2										10		
C15	C-07-50	C-07-75/1	10+00	11+93	193	193						2	2				6	4	4 x 2		2		4													
C16	C-07-50	C-07-75/1	11+93	15+74	381	381						2	2				6	4	4 x 2		2		4													
C17	C-07-51	C-07-75/2	10+00	12+46	246		246					2	2				4	6					4													
C18	C-07-59	C-07-76/E	10+00	16+45	645	645											2		2		2			2												
D1	C-07-79	C-07-103A/D1	75+00	75+81	81	81								2					4		4							6								
D2	C-07-79	C-07-103A/D2	75+00	77+75	275	275													4		4															
E1	C-07-53	C-07-75/3	10+00	14+43	443		443				3	2	2	2	6	3	4, 2, 2		8 x 2	YES	2		6										6			
F1	C-07-52	C-07-75/4	10+00	14+00	400		400				8, 8	6	6	2	6		2		2,2,2,2,2,2,2	YES	2		6, 6, 4	2									6			
F2	C-07-52	C-07-75/4	14+00	14+40	40		40				3	6	6	2	6		2		2,2,2,2,2,2,2	YES	2		6, 6, 4	2									6			
F3	C-07-52	C-07-75/4	14+40	15+00	100		100				2	6		2		3	2			YES	2		6,6													
F4	C-07-52	C-07-75/4	15+00	16+10	110		110				2	6		2		3	2			YES	2		6,6													
F5	C-07-70,	C-07-104/F5	15+33	17+75	242		242				2	8		2		3					4	2-6											6			
F6	C-07-70, 71	C-07-104/F6	17+75	20+93	318		318				2	8		2		3					4	2-6											6			
F7	C-07-71	C-07-104/F7	20+93	23+00	207		207				2	8		2		3					4	2-7											6	4		
F8	C-07-72	C-07-104/F8	23+00	26+25	325		325				2	8		2		3					4	2-8											6			
G1	C-07-54,55	C-07-76/A	10+00	13+78	378	378											6		3, 3, 3		2			2												
G2	C-07-55,56	C-07-76/B	13+78	19+47	569	569											6		3, 3		2			2												
G3	C-07-56	C-07-76/C	19+47	22+65	318	318											6		3		2			2												
G4	C-07-56, 57	C-07-76/A	22+65	25+57	292	292											6		3, 3		2			2												
G5	C-07-57, 58	C-07-76/D	25+57	30+35	478	478											6		3, 3, 3		2			2												
G6	C-07-58	C-07-76/B	30+35	33+21	286	286											6		3, 3, 3, 3, 3		2			2												
H1	C-07-25	C-07-101/H1	10+00	14+18	409	409					6	6				6			3 - 2		2		6	2				4						10		
H2	C-07-25	C-07-101/H2	14+18	15+33	124	124					6	6				6			4		2		6	2												
I1	C-07-78	C-07-101/I1	8+00	9+90	190	190					2	4							4		2		4	2												
I2	C-07-78	S-07-12	9+90	11+50	160					160	4	4							4		4															
I3	C-07-78	C-07-101/I1	11+50	12+89	139	139					2	4							4		2		4	2												
J1	C-07-68, 69	C-07-103A/J1	8+31	15+83	752	752					2 - 8									Buried Cable																
K1	C-07-73	C-07-107/K1	90+00	91+11	111		111				4	4		2 - 2					4		4	2 - 2						6			2					
L1	C-07-74	C-07-106/L1	80+00	80+75	75		75				6			2 - 2					4		4	2 - 2			2	2						2			2	
L2	C-07-74	C-07-106/L2	80+75	81+48	73		73				6			2 - 2					4		4	2 - 2			2	2		6				2			2	
L3	C-07-74	C-07-106/L3	81+48	83+95	247		247				3	4		3 - 2					4		4	2 - 2			2	2					2 - 2	2			2	
M1	C-07-75	C-07-105/M1	59+27	59+75	48		48				4	8, 2 - 2		2		3			4		4	2 - 2			2	2	2		2	2 - 1-1/4	2 - 2	2	6		2	
M2	C-07-75	C-07-105/M2	59+75	61+35	160		160					8		2		3			4		4	2 - 2									2 - 2					2
M3	C-07-75	C-07-105/M3	61+35	62+05	70		70				4	3		2 - 2		3			4		4	2 - 2									2					2
M4	C-07-75,76	C-07-105/M4	62+05	67+02	497		497				4	3				3			4		4	2 - 3														2
M5	C-07-76	C-07-106/M5	67+02	68+15	113		113				4	3				3			4		4	2 - 3												4		
M4	C-07-76	C-07-105/M4	68+15	70+30	215		215				4	3				3			4		4	2 - 3														2
N1	C-07-77	C-07-107/N1	85+00	86+38	138	138					4	3				3			4		4													4		
P1	C-07-80	C-07-107/P1	50+00	51+42	142	142								2 - 2																	2					
T1	C-07-81	C-07-107/T1	60+00	60+85	85	85																														2
				Totals	30,460	23,494	5,285	0	373	1,308	45,703	15,371	6,387	5,529	3,263	6,862	18,969	4,701	49,301	11,558	19,127	12,542	21,396	13,274	443	443	48	674	48	0	323	48	4,403	3,592	443	1,027

UT - Underground Trench; CT - Concrete Trench; AG - Above Ground Piping; BJ - Bore and Jack; BA - Bridge Attachment; FW - Freshwater; RW - Remedy Wastewater (force main); TW - Treated Water; CA - Carbon Amended Water (FW, TW or EX treated with carbon); DR - Drain

EX - Extracted water (from wells); IRZ - Insitu reactive zone (water recirculated from IRZ wells); ELECT 480V - Three phase power and distribution; ELECT 12kV - Electrical power and transmission conduit; FO - Fiber Optic; PROV - Provisional for future wells;

Spare W - Spare water lines; Spare FO - Spare fiber optic; ACID - Acid; CAU - Caustic; COAG - Coagulant; DR - Drain; SL - Slurry; CW - Chilled Water; WS - Wastewater; UA - Utility Air; FRW - Fire water suppression; IA - Instrument air; SC - Secondary Containment

DRAFT
NOT FOR
CONSTRUCTION

E2 Consulting Engineers, Inc.
1900 Powell Street, Ste. 250
Emeryville, CA 94608
(510) 652-1164

CH2MHILL.

NO.	DATE	DESCRIPTION	GM/SPEC	DWN	CHKD	SUPV	APVD BY
2	9/8/14	PRE-FINAL (90%) DESIGN		PH	PT	VMB	VMB
1	4/5/13	INTERMEDIATE (60%) DESIGN		PC	PT	VMB	VMB
0	11/1/11	PRELIMINARY (30%) DESIGN		PC	PT	VMB	VMB

REVISIONS

APPROVED BY
SO
SUPV VMB
DSGN PT
DWN PC
CHKD VMB
OK VMB
DATE 09/08/14
SCALES N/A

TOPOCK GROUNDWATER REMEDIATION PROJECT

PIPE SCHEDULE

GAS TRANSMISSION & DISTRIBUTION
PACIFIC GAS AND ELECTRIC COMPANY
SAN FRANCISCO, CALIFORNIA

MICROFILM
BILL OF MATL
DWG LIST
SUPSDS
SUPSD BY
SHEET NO. of SHEETS
C-07-03
REV 2

FILENAME: E2-C-XXX-0703AD.DWG
PLOT DATE: PLOTDATE PLOT TIME: PLOTTIME

N1808

C:\Users\peter.hubbard\CAD\Topock\E2-C-XXX-0703.DWG, 22X34, 8/27/2014 7:36:58 AM

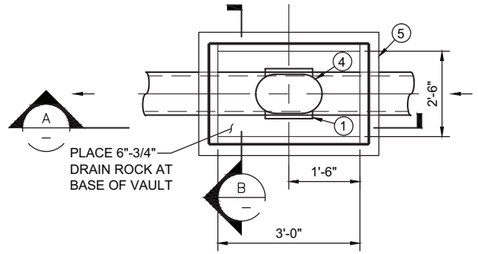

PLAN VIEW

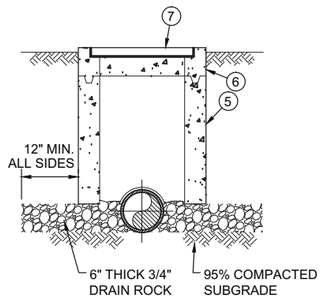

SECTION B

1 DETAIL
3/4" = 1'-0"

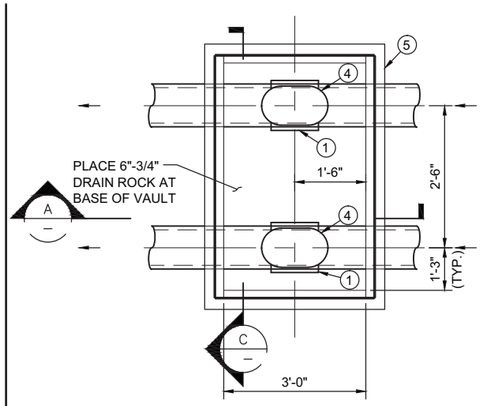

PLAN VIEW

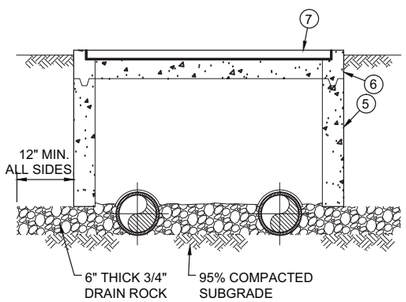

SECTION C

2 DETAIL
3/4" = 1'-0"

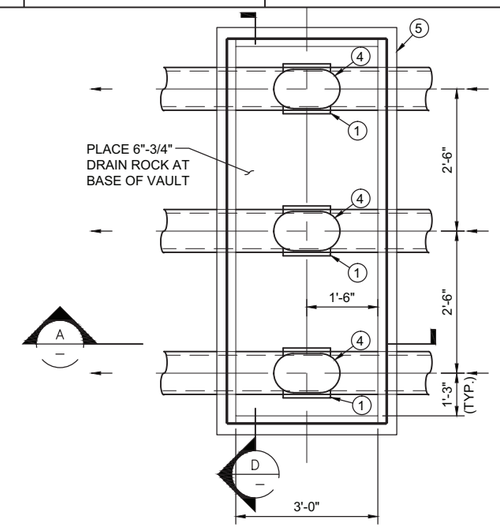

PLAN VIEW

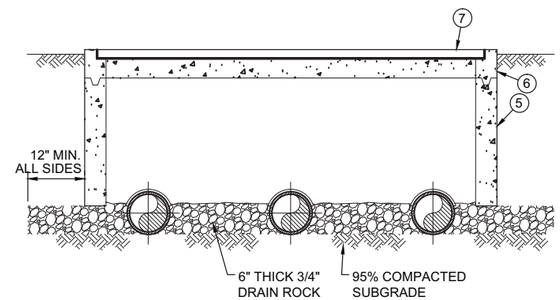

SECTION D

3 DETAIL
3/4" = 1'-0"

KEY

1. STAINLESS STEEL SERVICE SADDLE WITH 2 INCH FEMALE PIPE THREAD TAP
2. 2 INCH DIAMETER BRASS NIPPLE WITH MALE THREADED PIPE ENDS.
3. 2 INCH DIAMETER BRASS GATE VALVE WITH HANDWHEEL AND FEMALE THREADED PIPE ENDS.
4. 2 INCH DIAMETER SINGLE BODY COMBINATION AIR VALVE AND VACUUM VALVE
5. PRECAST UTILITY VAULT LOWER SECTION. WALL OPENINGS PROVIDED AS SHOWN ON PLAN AND SECTIONS. PROVIDE KEYED CONSTRUCTION JOINT WITH PREFORMED CONCRETE JOINT SEALANT. PROVIDE WATERSTOP AT ALL JOINTS.
6. PRECAST UTILITY VAULT TOP SECTION. PROVIDE KEYED CONSTRUCTION JOINT WITH PREFORMED CONCRETE JOINT SEALANT. PROVIDE WATERSTOP AT ALL JOINTS. PROVIDE CAST IN FRAME FOR TRAFFIC COVER
7. ONE PIECE TRAFFIC COVER DESIGNED FOR AASHTO H20-44 TRAFFIC LOADING. FOUR ½ INCH DIAMETER 13NC THREADED BOLTS SHALL BE SUPPLIED FOR SECURING COVER TO FRAME IN TOP SECTION. PROVIDE RED PRIMER PAINT FINISH.

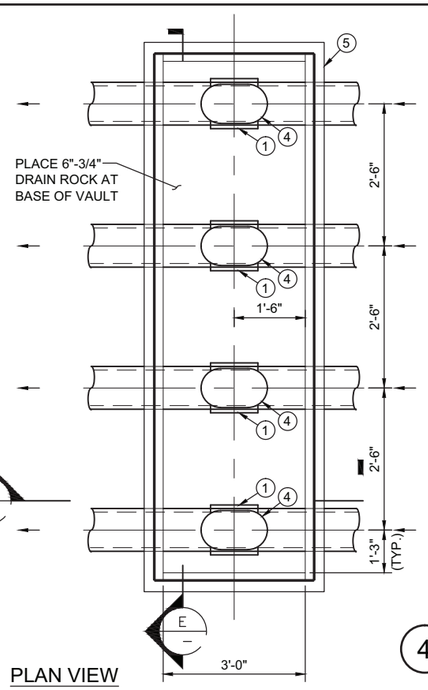

PLAN VIEW

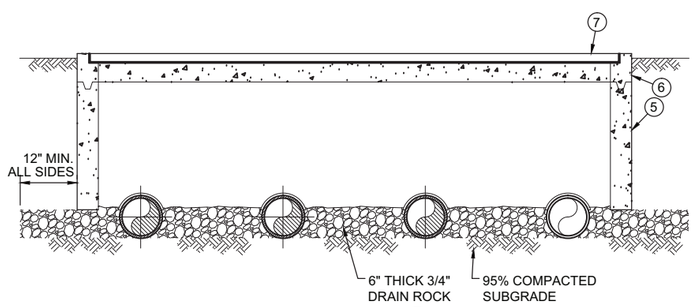

SECTION E

4 DETAIL
3/4" = 1'-0"

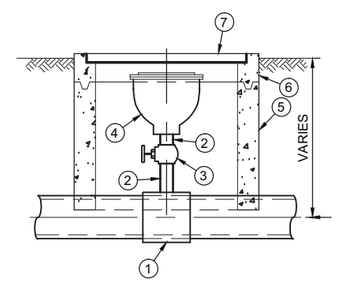

A SECTION
3/4" = 1'-0"

DRAFT
NOT FOR
CONSTRUCTION

E2 Consulting Engineers, Inc.
1900 Powell Street, Ste. 250
Emeryville, CA 94608
(510) 652-1164

CH2MHILL.

NO.	DATE	DESCRIPTION	GM/SPEC	DWN	CHKD	SUPV	APVD BY
1	9/8/14	PRE-FINAL (90%) DESIGN		PH	PT	VMB	VMB
0	4/5/13	INTERMEDIATE (60%) DESIGN		PC	PT	PT	VMB

REVISIONS

APPROVED BY
SO
SUPV VMB
DSGN PT
DWN PH
CHKD VMB
OK VMB
DATE 09/08/14
SCALES 3/4" = 1'-0"

TOPOCK GROUNDWATER REMEDIATION PROJECT
COMBINATION AIR RELIEF AND VACUUM VALVE DETAILS

GAS TRANSMISSION & DISTRIBUTION
PACIFIC GAS AND ELECTRIC COMPANY
SAN FRANCISCO, CALIFORNIA

MICROFILM
BILL OF MATL
DWG LIST
SUPSDS
SUPSD BY
SHEET NO. of SHEETS
C-07-07
REV 1

PLOT DATE: PLOTDATE PLOT TIME: PLOTTIME
FILENAME: E2-C-XXX-0707.dwg

N1808

C:\Users\peter.hubbard\CAD\Topock\E2-C-XXX-0707.DWG, 22X34, 8/20/2014 4:12:28 PM

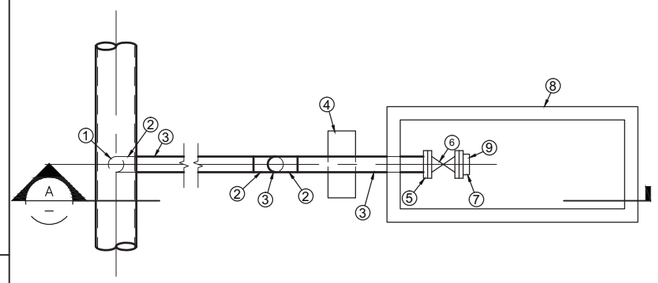

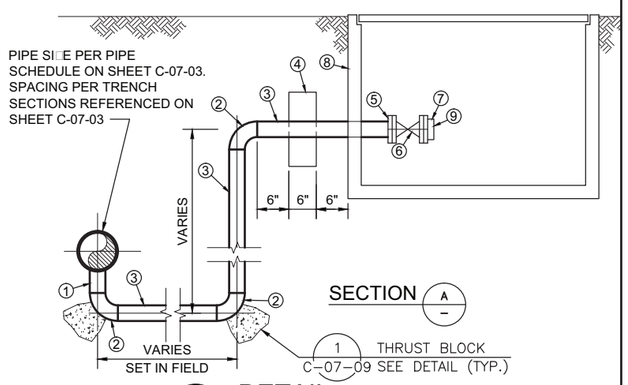

1 DETAIL
3/4" = 1'-0"

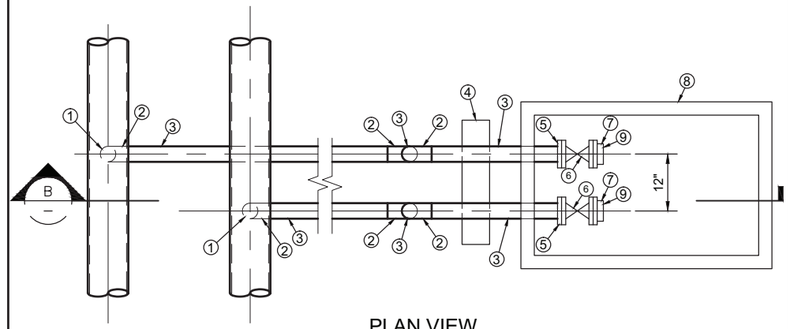

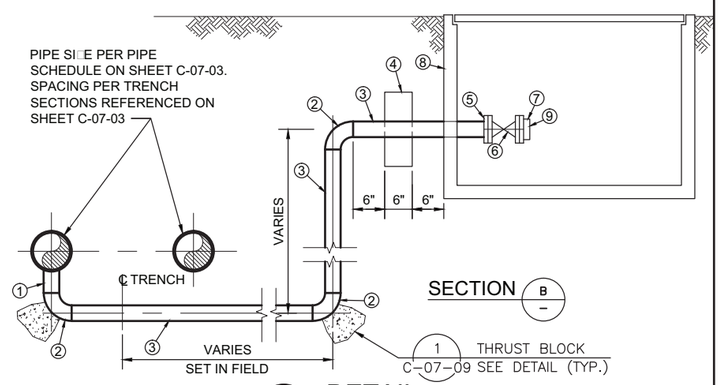

2 DETAIL
3/4" = 1'-0"

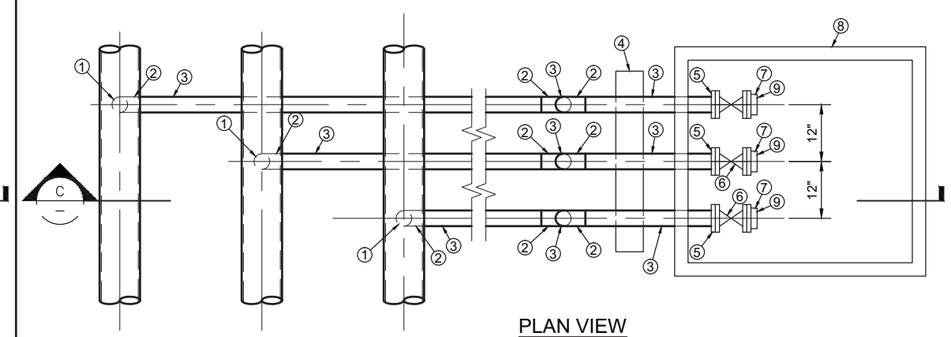

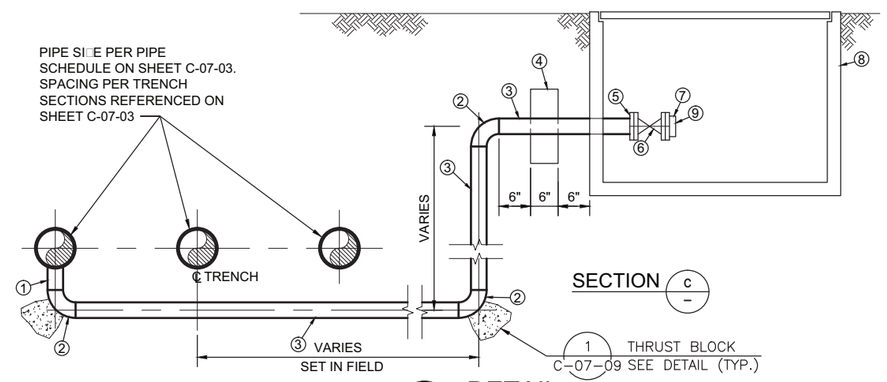

3 DETAIL
3/4" = 1'-0"

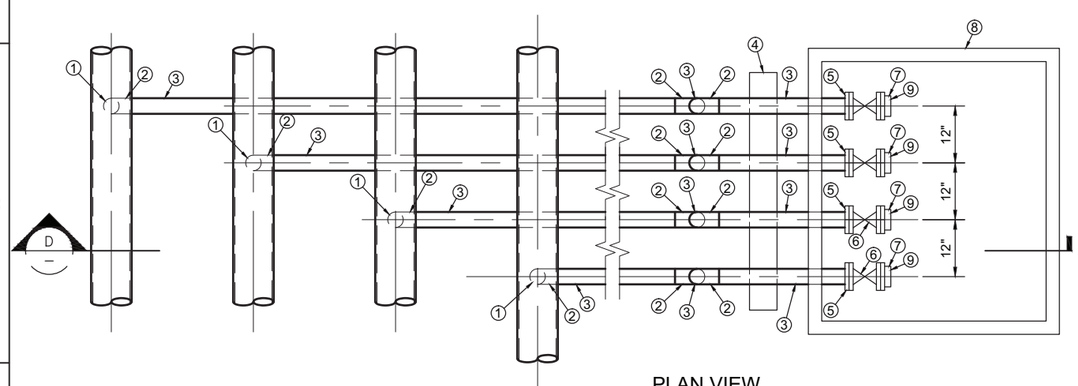

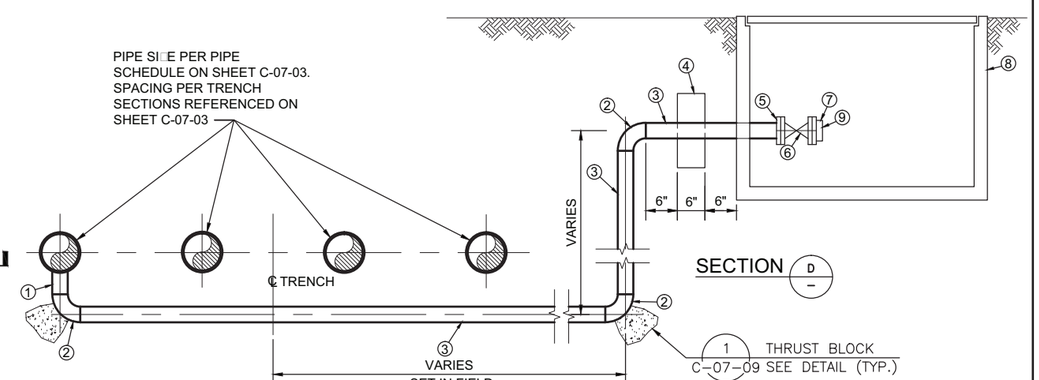

4 DETAIL
3/4" = 1'-0"

KEY

1. ELECTROFUSION TYPE HDPE BRANCH SADDLE MAIN SIZE PER TABLE 7-3 WITH 2 INCH DIAMETER BUTT OUTLET.
2. 2 INCH DIAMETER HDPE 90 DEGREE ELBOW WITH BUTT ENDS.
3. 2 INCH DIAMETER HDPE PIPE.
4. CONCRETE THRUST COLLAR TO ENCASE EACH BLOW OFF LATERAL IN ONE MONOLITH. THRUST COLLAR TO EXTEND SIX INCHES ABOVE AND BELOW EACH PIPE AND ALONG THE OPPOSITE ENDS NOT JOINED IN THE MIDDLE.
5. VAN STONE STYLE FLANGE WITH TYPE 316 STAINLESS STEEL BACKING RING. BACKING RINGS TO MEET STANDARD DIMENSIONAL SPECIFICATIONS.
6. FLANGED RESILIENT WEDGE GATE VALVE WITH HAND WHEEL OPERATOR.
7. 2X1 REDUCING FLANGE WITH FEMALE IRON PIPE THREADS.
8. PRECAST UTILITY VAULT. WALL OPENINGS PROVIDED AS SHOWN ON PLAN AND SECTIONS. PROVIDE KEYED CONSTRUCTION JOINT WITH PREFORMED CONCRETE JOINT SEALANT. PROVIDE WATERSTOP AT ALL JOINTS. PROVIDE CAST IN FRAME FOR TRAFFIC COVER. ONE PIECE TRAFFIC COVER DESIGNED FOR AASHTO H20-44 TRAFFIC LOADING. FOUR ½ INCH DIAMETER 13NC THREADED BOLTS SHALL BE SUPPLIED FOR SECURING COVER TO FRAME IN TOP SECTION.
9. 1 INCH DIAMETER NIPPLE WITH MALE PIPE THREADS. SUPPLY WITH CAP FOR HOSE THREADED END.

DRAFT
NOT FOR
CONSTRUCTION

E2 Consulting Engineers, Inc.
1900 Powell Street, Ste. 250
Emeryville, CA 94608
(510) 652-1164

CH2MHILL.

REVISIONS

NO.	DATE	DESCRIPTION	GM/SPEC	DWN	CHKD	SUPV	APVD BY
1	9/8/14	PRE-FINAL (90%) DESIGN		PH	VMB	VMB	VMB
0	4/5/13	INTERMEDIATE (60%) DESIGN		PC	VMB	VMB	VMB

APPROVED BY	
SO	
SUPV	VMB
DSGN	PT
DWN	PH
CHKD	VMB
OK	VMB
DATE	09/08/14
SCALES	3/4" = 1'-0"

TOPOCK GROUNDWATER REMEDIATION PROJECT
BLOW OFF DETAILS

GAS TRANSMISSION & DISTRIBUTION
PACIFIC GAS AND ELECTRIC COMPANY
SAN FRANCISCO, CALIFORNIA

MICROFILM	
BILL OF MATL	
DWG LIST	
SUPSDS	
SUPSD BY	
SHEET NO. of SHEETS	
C-07-08	REV 1

FILENAME: E2-C-XXX-0708.dwg
PLOT DATE: PLOTDATE PLOT TIME: PLOTTIME
C:\Users\peter.hubbard\CAD\Topock\E2-C-XXX-0708.dwg, 22X34, 8/20/2014 3:57:07 PM
N1808

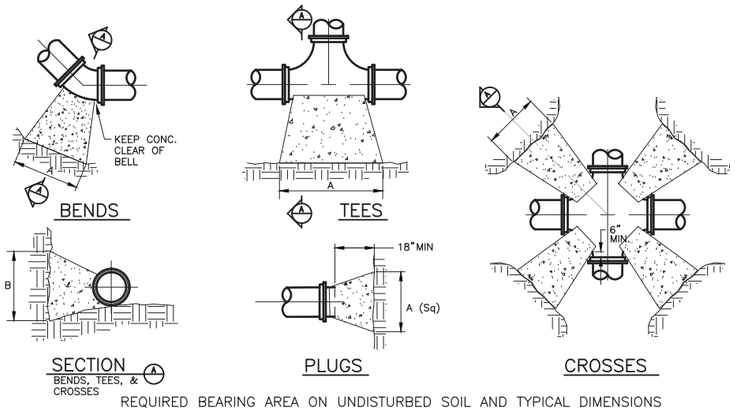

REQUIRED BEARING AREA ON UNDISTURBED SOIL AND TYPICAL DIMENSIONS

SIZE	CROSSES/90° BENDS			45° BENDS			22° BENDS			TEES & PLUGS		
	AREA SQ. FT.	"A"(in)	"B"(in)	AREA SQ. FT.	"A"(in)	"B"(in)	AREA SQ. FT.	"A"(in)	"B"(in)	AREA SQ. FT.	"A"	"B"
4"	1.8	22	12	1.0	12	12	0.5	10	7	1.3	22	8
6"	4.0	32	18	2.2	18	18	1.1	16	10	2.8	34	12
8"	7.1	42	24	3.8	23	24	2.0	21	14	5.0	45	16
12"	16.0	64	36	8.7	35	36	4.4	30	21	11.3	68	24

NOTES

1. BASED ON 115 PSI PRESSURE PLUS 60 PSI WATER HAMMER AND 2,000 PSF SOIL BEARING
2. FOR UNSTABLE SOIL CONDITIONS, CHECK WITH ENGINEER FOR THRUST BLOCK DIMENSIONS
3. MINIMUM ALLOWABLE 28 DAY COMPRESSIVE STRENGTH OF 3,000 psi.
4. COARSE AGGREGATE: 1 INCH AND SMALLER.
5. SLUMP 3 TO 5 INCHES.
6. AIR ENTRAINMENT: 3 TO 6 PERCENT BY VOLUME.

1 THRUST BLOCK DETAILS

N.T.S.

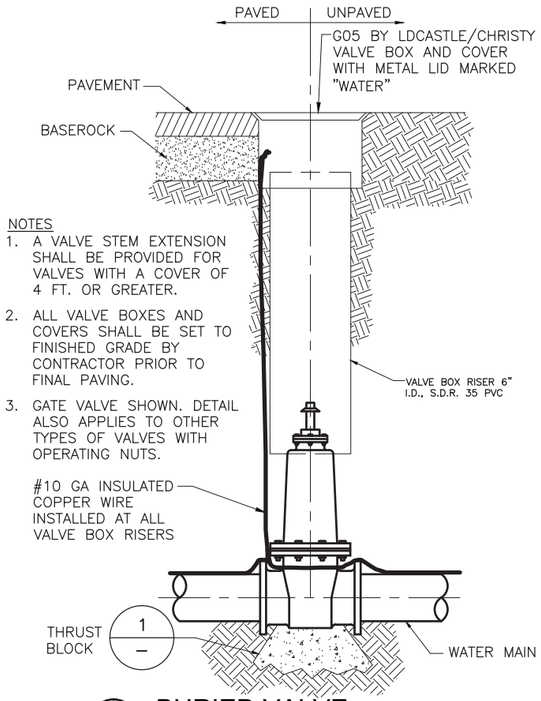

NOTES

1. A VALVE STEM EXTENSION SHALL BE PROVIDED FOR VALVES WITH A COVER OF 4 FT. OR GREATER.
2. ALL VALVE BOXES AND COVERS SHALL BE SET TO FINISHED GRADE BY CONTRACTOR PRIOR TO FINAL PAVING.
3. GATE VALVE SHOWN. DETAIL ALSO APPLIES TO OTHER TYPES OF VALVES WITH OPERATING NUTS.

2 BURIED VALVE

N.T.S.

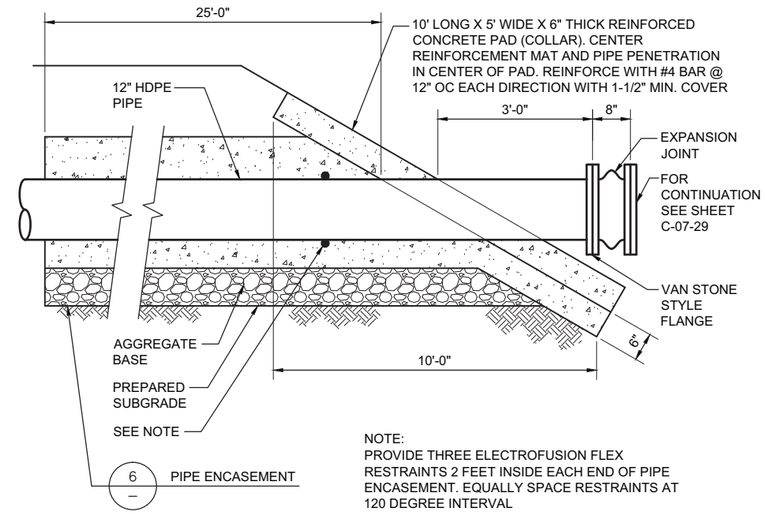

NOTE:
PROVIDE THREE ELECTROFUSION FLEX RESTRAINTS 2 FEET INSIDE EACH END OF PIPE ENCASEMENT. EQUALLY SPACE RESTRAINTS AT 120 DEGREE INTERVAL

3 PIPE DAYLIGHT DETAIL

N.T.S.

C-07-31

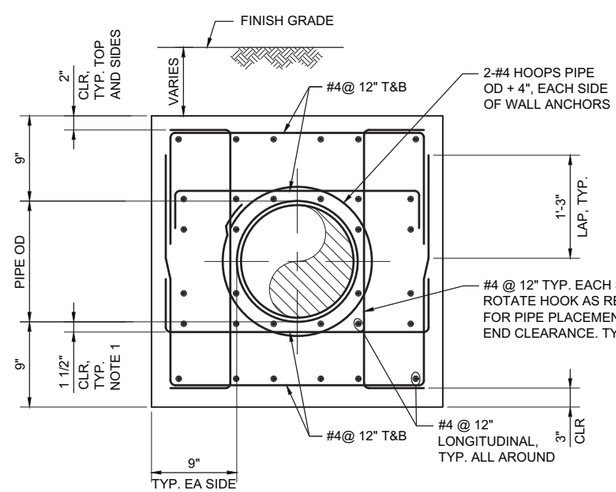

NOTE:
END LONGITUDINAL STEEL CLOSEST TO THE PIPE OD AT #4 HOOPS AND CENTER LATERAL STEEL BETWEEN WALL ANCHORS.

4 PIPE ENCASMENT

N.T.S.

DRAFT
NOT FOR
CONSTRUCTION

E2 Consulting Engineers, Inc.
1900 Powell Street, Ste. 250
Emeryville, CA 94608
(510) 652-1164

CH2MHILL.

NO.	DATE	DESCRIPTION	GM/SPEC	DWN	CHKD	SUPV	APVD BY
0	9/8/14	PRE-FINAL (90%) DESIGN		PH	VMB	VMB	VMB

REVISIONS

APPROVED BY	
SO	
SUPV	VMB
DSGN	PT
DWN	PH
CHKD	VMB
OK	VMB
DATE	09/08/14
SCALES	NTS

TOPOCK GROUNDWATER REMEDIATION PROJECT
PIPELINE DETAILS

GAS TRANSMISSION & DISTRIBUTION
PACIFIC GAS AND ELECTRIC COMPANY
SAN FRANCISCO, CALIFORNIA

MICROFILM
BILL OF MATL
DWG LIST
SUPSDS
SUPSD BY
SHEET NO. of SHEETS
C-07-09
REV 0

FILENAME: E2-C-XXX-0709.dwg
PLOT DATE: $PLOTDATE PLOT TIME: $PLOTTIME
C:\Users\peter.hubbard\CAD\Topock\E2-C-XXX-0709.dwg, 22/34, 9/5/2014 12:08:12 PM
N1808

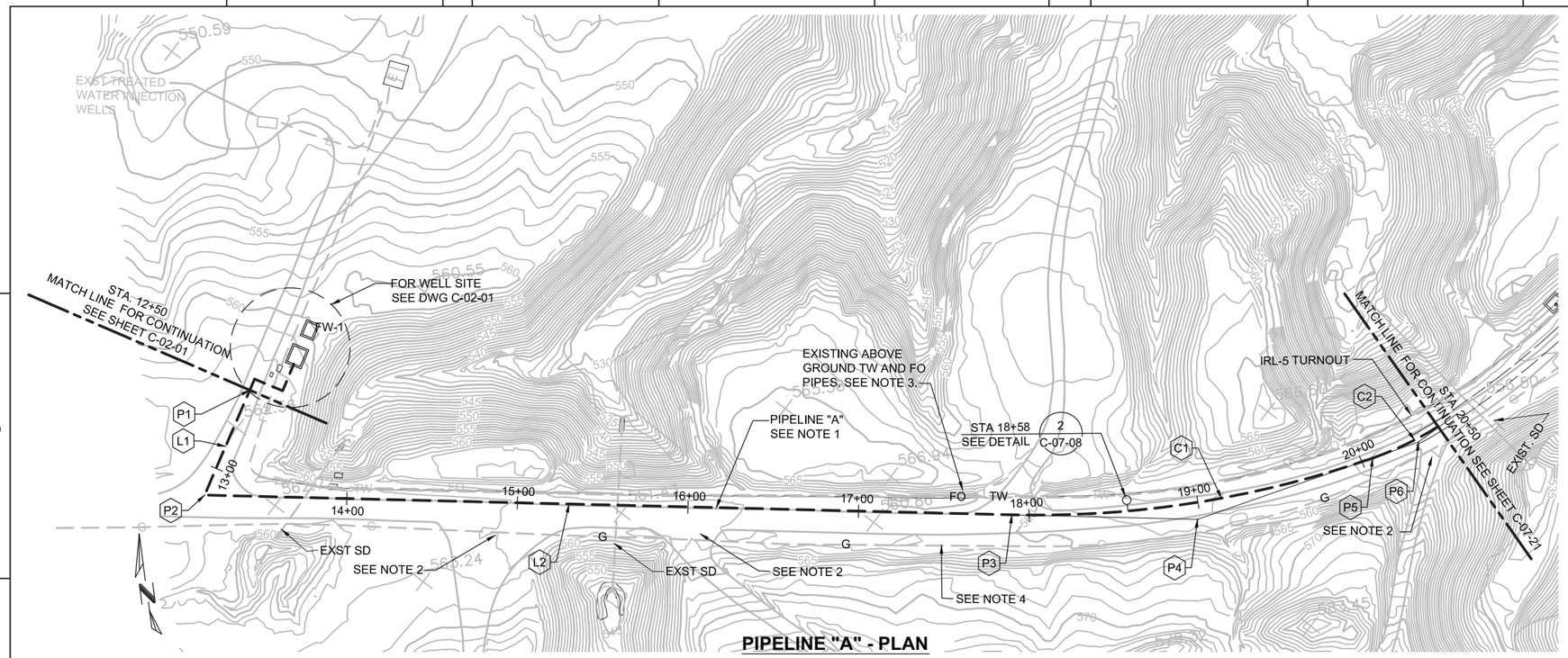

PIPELINE "A" - PLAN

(SCALE: 1" = 40' H)

NOTES:

1. THE NEW PIPELINE ALIGNMENT SHOWS CENTER OF TRENCH.
2. PROVIDE VEHICLE ACCESS AT OWNER'S DIRECTION.
3. PROTECT ABOVE GROUND PIPES IN PLACE.
4. MAINTAIN 3' MINIMUM HORIZONTAL CLEARANCE FROM EXISTING GAS LINE.

Point Table

Point	Descrip-tion	Sta	Northing	Easting
P1	FW-1	12+50.00	2102853.17	7613210.70
P2	PI	13+17.01	2102795.79	7163176.10
P3	BC	17+90.36	2102720.38	7613643.40
P4	PI	18+99.16	2102703.05	7613750.81
P5	EC, BC	20+05.60	2102724.74	7613857.43
P6	PI	20+34.05	2102730.40	7613885.31

Line Table

Line	Beg Point	End Point	Distance	Bearing
L1	P1	P2	67.01	S 31° 05' 24" W
L2	P2	P3	473.35	S 80° 49' 59" W

Curve Table

Curve	Beg Point	End Point	Distance	Δ	Radius	Tangent
C1	P3	P5	215.24	20° 39' 26"	597.00	108.80
C2	P5	P7	56.48	17° 07' 16"	189.00	28.45

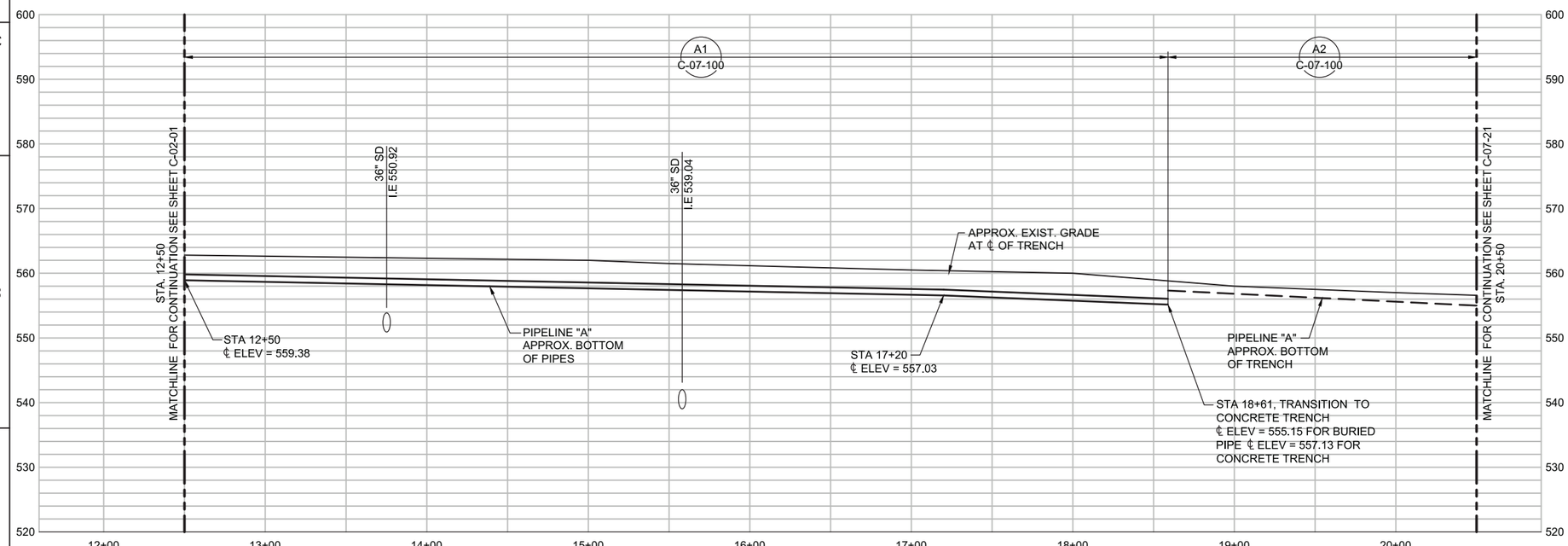

PIPELINE "A" - PROFILE

(SCALE: 1" = 40' H; 1" = 10' V)

HORZ: SCALE: 1"=40' (0, 40, 80, 120)

VERT: SCALE: 1"=10' (0, 10, 20, 30)

DRAFT NOT FOR CONSTRUCTION

E2 Consulting Engineers, Inc.
1900 Powell Street, Ste. 250
Emeryville, CA 94608
(510) 652-1164

CH2MHILL.

NO.	DATE	DESCRIPTION	GM/SPEC	DWN	CHKD	SUPV	APVD	BY
2	9/8/14	PRE-FINAL (90%) DESIGN		PH	PT	PT	VMB	
1	4/5/13	INTERMEDIATE (60%) DESIGN		PC/EE	PT	PT	VMB	
0	11/18/11	PRELIMINARY (30%) DESIGN		EE	PT	PT	VMB	

REVISIONS

APPROVED BY: SO
SUPV VMB
DSGN PT
DWN PH
CHKD VMB
OK VMB
DATE 09/08/14
SCALES

TOPOCK GROUNDWATER REMEDIATION PROJECT
PLAN AND PROFILE
PIPELINE "A"
STA 12+50 TO STA 20+50
GAS TRANSMISSION & DISTRIBUTION
PACIFIC GAS AND ELECTRIC COMPANY
SAN FRANCISCO, CALIFORNIA

MICROFILM
BILL OF MATL
DWG LIST
SUPSDS
SUPSD BY
SHEET NO. of SHEETS
C-07-20
REV 2

FILENAME: E2-C-XXX-07209.dwg
PLOT DATE: $PLOTDATE PLOT TIME: $PLOTTIME
C:\Users\peter.hubbard\CAD\Topock\E2-C-XXX-0720.dwg, 22X34, 9/5/2014 12:09:59 PM
N1808

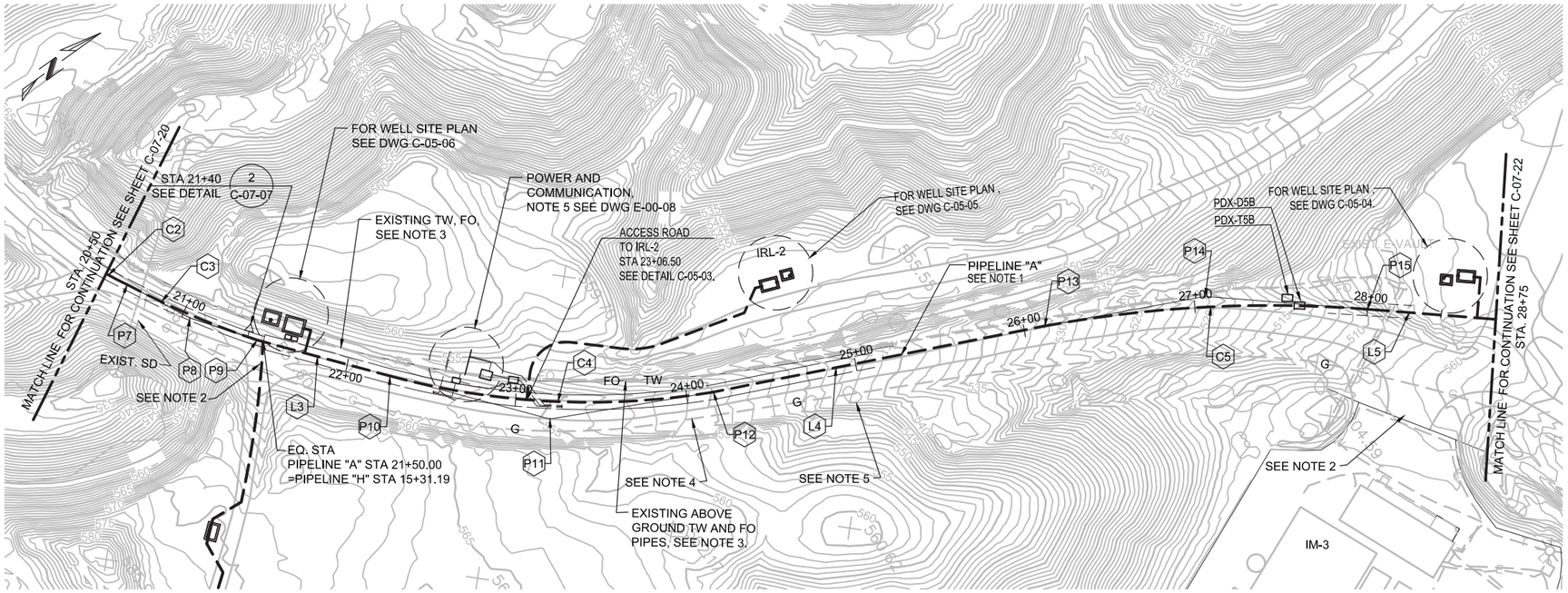

PIPELINE "A" - PLAN

(SCALE: 1" = 40' H)

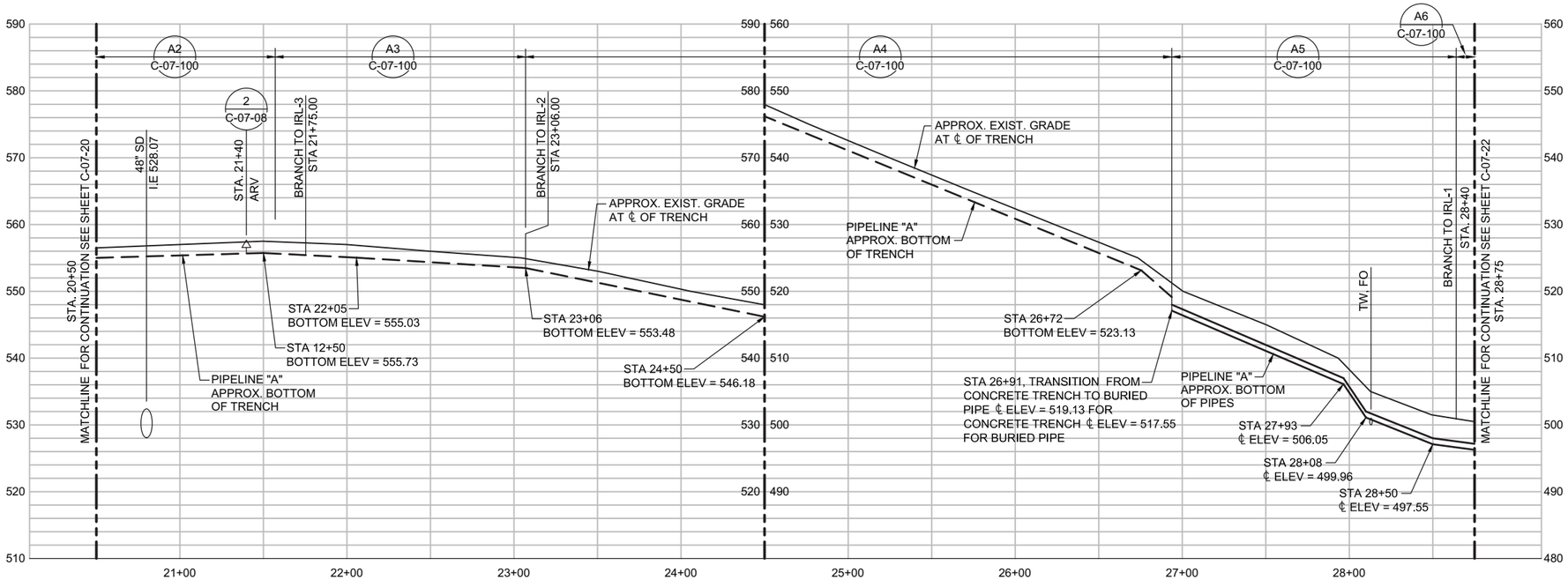

PIPELINE "A" - PROFILE

(SCALE: 1" = 40' H; 1" = 10' V)

NOTES:

1. THE NEW PIPELINE ALIGNMENT SHOWS CENTER OF TRENCH.
2. PROVIDE VEHICLE ACCESS AT OWNER'S DIRECTION - AT ALL TIMES FOR IM-3 ENTRANCE ROAD
3. PROTECT ABOVE GROUND PIPES IN PLACE.
4. MAINTAIN 3' MINIMUM HORIZONTAL CLEARANCE FROM EXISTING GAS LINE.
5. PROTECT EXISTING FLAGSTONE CUTTER IN PLACE.
6. FOR ELECTRICAL (PDX-DXX) COMMUNICATIONS (PDX-TXX) SEE DWGS E-00-07 AND E-00-08.

Point Table

Point	Description	Sta	Northing	Easting
P7	EC,BC	20+62.08	2102744.04	7613910.28
P8	PI	20+90.53	2102762.08	7613947.32
P9	EC	21+44.29	2102786.06	7613980.83
P10	BC	22+24.40	2102836.23	7614043.28
P11	PI	23+20.66	2102896.59	7614118.27
P12	EC	24+13.99	2102982.56	7614161.58
P13	BC	26+10.49	2103160.89	7614244.11
P14	PI	27+05.27	2103246.29	7614285.21
P15	EC	27+98.97	2103318.24	7614346.90

Line Table

Line	Beg Point	End Point	Distance	Bearing
L3	P9	P10	80.11	N 38° 46' 38" E
L4	P12	P13	196.50	S 24° 50' 04" E
L5	P15	P16	85.16	S 40° 35' 59" E

Curve Table

Curve	Beg Point	End Point	Distance	Δ	Radius	Tangent
C2	P5	P7	56.48	17° 07' 16"	189.00	28.45
C3	P7	P9	82.21	09° 36' 47"	490.00	41.20
C4	P10	P12	189.59	24° 27' 57"	444.00	96.26
C5	P13	P15	188.48	14° 53' 44"	725.00	94.78

0 40 80 120
HORZ: SCALE: 1"=40'
0 10 20 30
VERT: SCALE: 1"=10'

DRAFT
NOT FOR
CONSTRUCTION

E2 Consulting Engineers, Inc.
1900 Powell Street, Ste. 250
Emeryville, CA 94608
(510) 652-1164

CH2MHILL.

NO.	DATE	DESCRIPTION	GM/SPEC	DWN	CHKD	SUPV	APVD BY
2	9/8/14	PRE-FINAL (90%) DESIGN		PH	VMB	VMB	VMB
1	4/5/13	INTERMEDIATE (60%) DESIGN		PC	VMB	VMB	VMB
0	11/18/11	PRELIMINARY (30%) DESIGN		PC	VMB	VMB	VMB

REVISIONS

APPROVED BY: SO
SUPV VMB
DSGN PT
DWN PH
CHKD VMB
OK VMB
DATE 09/08/14
SCALES

TOPOCK GROUNDWATER REMEDIATION PROJECT
PLAN AND PROFILE
PIPELINE "A"
STA 20+50 TO STA 28+75
GAS TRANSMISSION & DISTRIBUTION
PACIFIC GAS AND ELECTRIC COMPANY
SAN FRANCISCO, CALIFORNIA

MICROFILM
BILL OF MATL
DWG LIST
SUPSDS
SUPSD BY
SHEET NO. of SHEETS
C-07-21
REV 2

FILENAME: E2-C-XXX-0721.dwg
PLOT DATE: $PLOTDATE PLOT TIME: $PLOTTIME
C:\Users\peter.hubbard\CAD\Topock\E2-C-XXX-0721.dwg, 22X34, 9/5/2014 12:11:20 PM
N1808

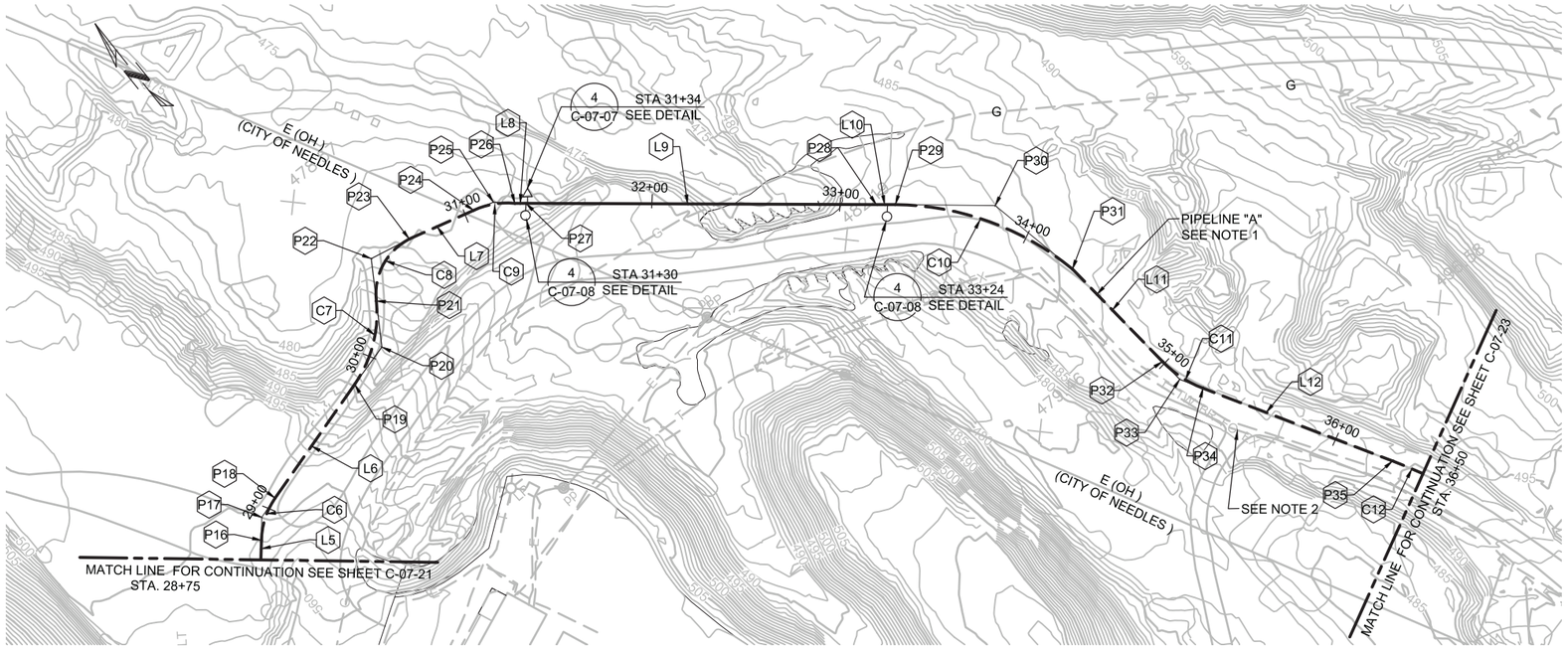

PIPELINE "A" - PLAN

(SCALE: 1" = 40' H)

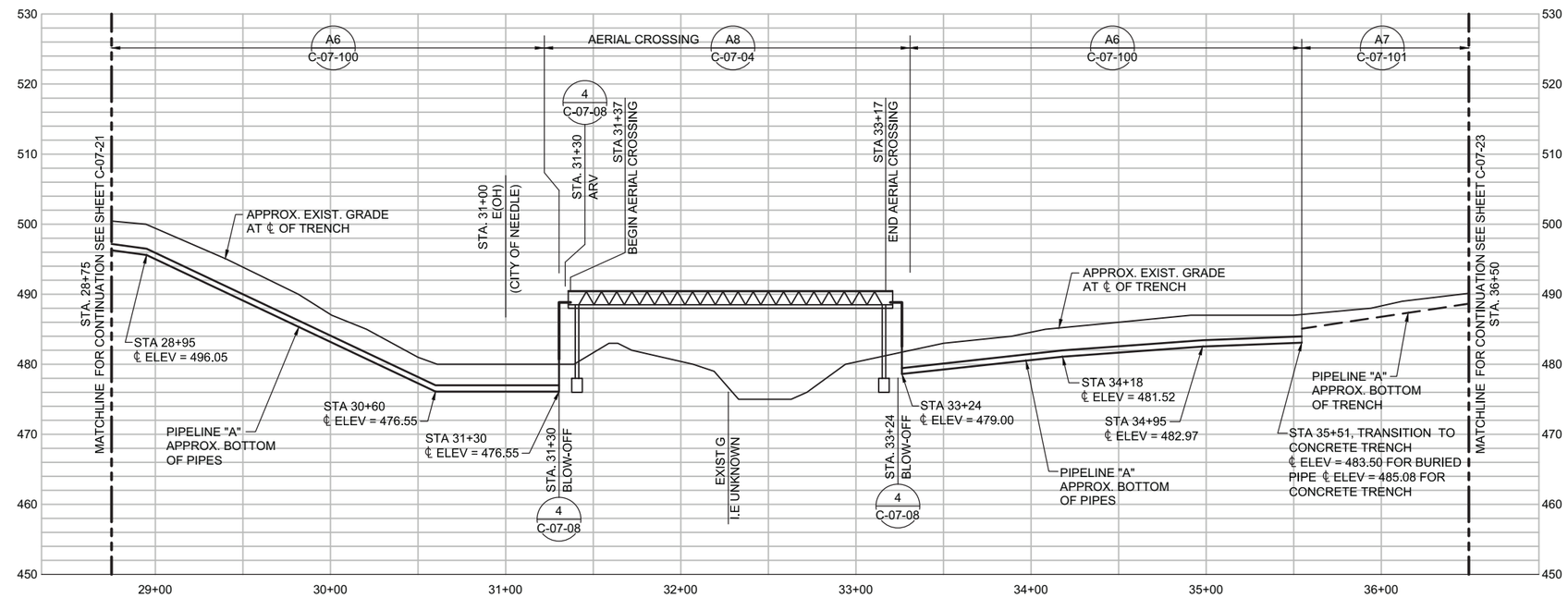

PIPELINE "A" - PROFILE

(SCALE: 1" = 40' H; 1" = 10' V)

NOTES:

1. THE NEW PIPELINE ALIGNMENT SHOWS CENTER OF TRENCH.
2. PROVIDE VEHICLE ACCESS AT OWNER'S DIRECTION.
3. MAINTAIN 3' MINIMUM HORIZONTAL CLEARANCE FROM EXISTING IM-3 PIPING (E, T, TW, BR & FO)

Point Table

Point	Descrip-tion	Sta	Northing	Easting
P16	BC	28+84.13	2103382.90	7614402.32
P17	PI	28+96.44	2103392.37	7614410.18
P18	EC	29+08.01	2103395.79	7614422.00
P19	BC	29+81.73	2103416.25	7614492.82
P20	PI	30+06.33	2103422.60	7614516.59
P21	EC, BC	30+28.57	2103443.45	7614529.65
P22	PI	30+51.26	2103462.68	7614541.70
P23	EC	30+68.32	2103458.11	7614563.92
P24	BC	31+05.78	2103448.43	7614600.11
P25	PI	31+17.11	2103445.25	7614610.99
P26	EC	31+28.06	2103437.69	7614619.42
P27	VPI	31+34.06	2103433.90	7614624.07
P28	VPI	33+20.05	2103316.52	7614768.34
P29	BC	33+30.16	2103310.14	7614776.18
P30	PI	33+83.22	2103276.39	7614817.13
P31	EC	34+32.16	2103224.42	7614827.82
P32	BC	35+00.68	2103156.19	7614834.11
P33	PI	35+13.88	2103143.05	7614835.32
P34	EC	35+26.66	2103131.63	7614841.93
P35	BC	36+34.49	2103038.31	7614895.96

Line Table

Line	Beg Point	End Point	Distance	Bearing
L5	P15	P16	85.16	S 40° 35' 59" W
L6	P18	P19	73.72	N 73° 42' 58" E
L7	P23	P24	37.46	S 75° 01' 31" E
L8	P26	P27	6.00	S 50° 52' 04" E
L9	P27	P28	185.99	S 50° 52' 04" E
L10	P28	P29	10.11	S 50° 52' 04" E
L11	P31	P32	68.52	S 05° 16' 02" E
L12	P34	P35	107.83	S 40° 35' 59" W

Curve Table

Curve	Beg Point	End Point	Distance	Δ	Radius	Tangent
C6	P16	P18	23.88	34° 12' 03"	40.00	12.31
C7	P19	P21	46.84	43° 17' 19"	62.00	24.60
C8	P21	P23	39.75	69° 01' 17"	33.00	22.69
C9	P24	P26	22.28	25° 31' 50"	50.00	11.33
C10	P29	P31	102.00	38° 57' 43"	150.00	53.06
C11	P32	P34	25.98	24° 48' 23"	60.00	13.20
C12	P35	P37	86.87	16° 35' 29"	300.00	43.74

0 40 80 120
HORZ: SCALE: 1"=40'
0 10 20 30
VERT: SCALE: 1"=10'

DRAFT
NOT FOR
CONSTRUCTION

E2 Consulting Engineers, Inc.
1900 Powell Street, Ste. 250
Emeryville, CA 94608
(510) 652-1164

CH2MHILL.

NO.	DATE	DESCRIPTION	GM/SPEC	DWN	CHKD	SUPV	APVD BY
2	9/8/14	PRE-FINAL (90%) DESIGN		PH	PT	PT	VMB
1	4/5/13	INTERMEDIATE (60%) DESIGN		PC/EE	PT	PT	VMB
0	11/18/11	PRELIMINARY (30%) DESIGN		PC	PT	PT	VMB

REVISIONS

APPROVED BY: SO
SUPV VMB
DSGN PT
DWN PC/EE
CHKD VMB
OK VMB
DATE 09/08/14
SCALES

TOPOCK GROUNDWATER REMEDIATION PROJECT
PLAN AND PROFILE
PIPELINE "A"
STA 28+75 TO STA 36+50
GAS TRANSMISSION & DISTRIBUTION
PACIFIC GAS AND ELECTRIC COMPANY
SAN FRANCISCO, CALIFORNIA

MICROFILM
BILL OF MATL
DWG LIST
SUPSDS
SUPSD BY
SHEET NO. C-07-22 of SHEETS REV 2

FILENAME: E2-C-XXX-0722.dwg
PLOT DATE: $PLOTDATE PLOT TIME: $PLOTTIME
C:\Users\peter.hubbard\CAD\Topock\E2-C-XXX-0722.dwg 22X34 9/5/2014 2:26:02 PM
N1808

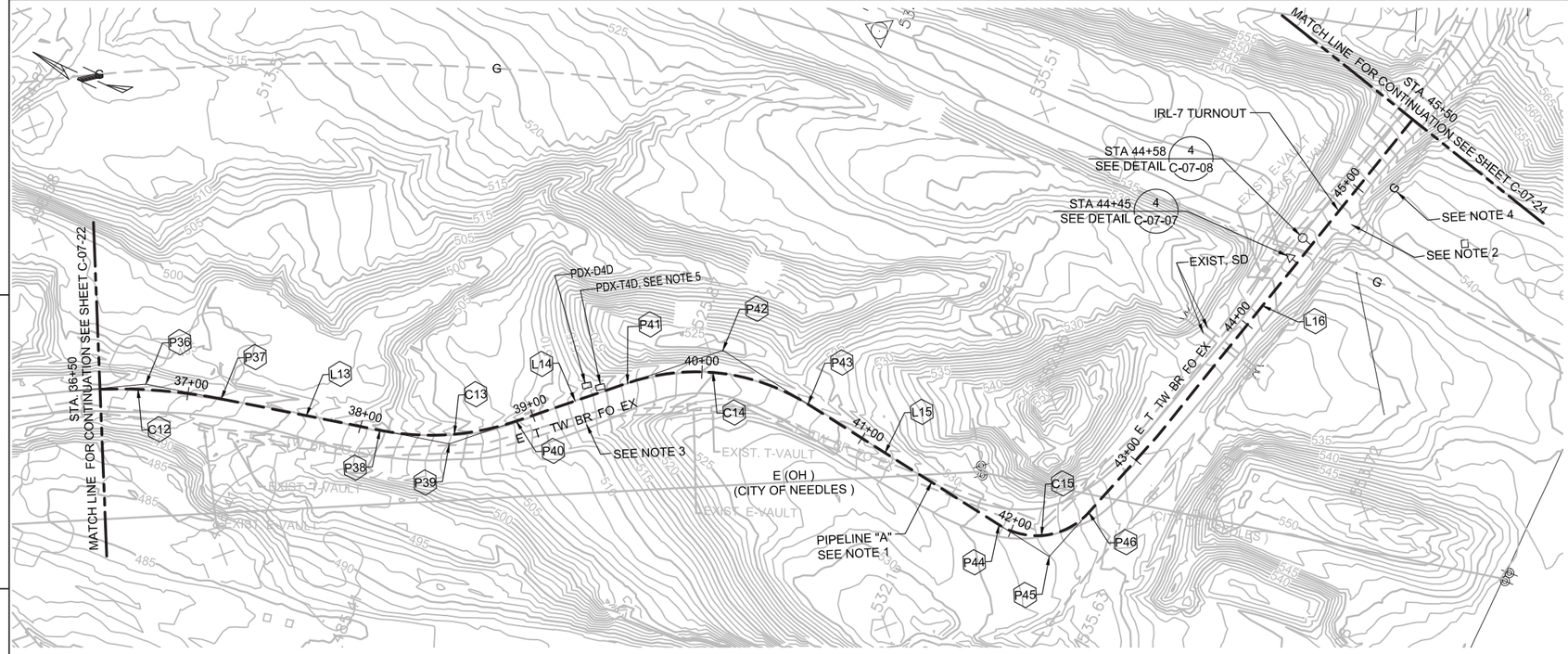

PIPELINE "A" - PLAN

(SCALE: 1" = 40' H)

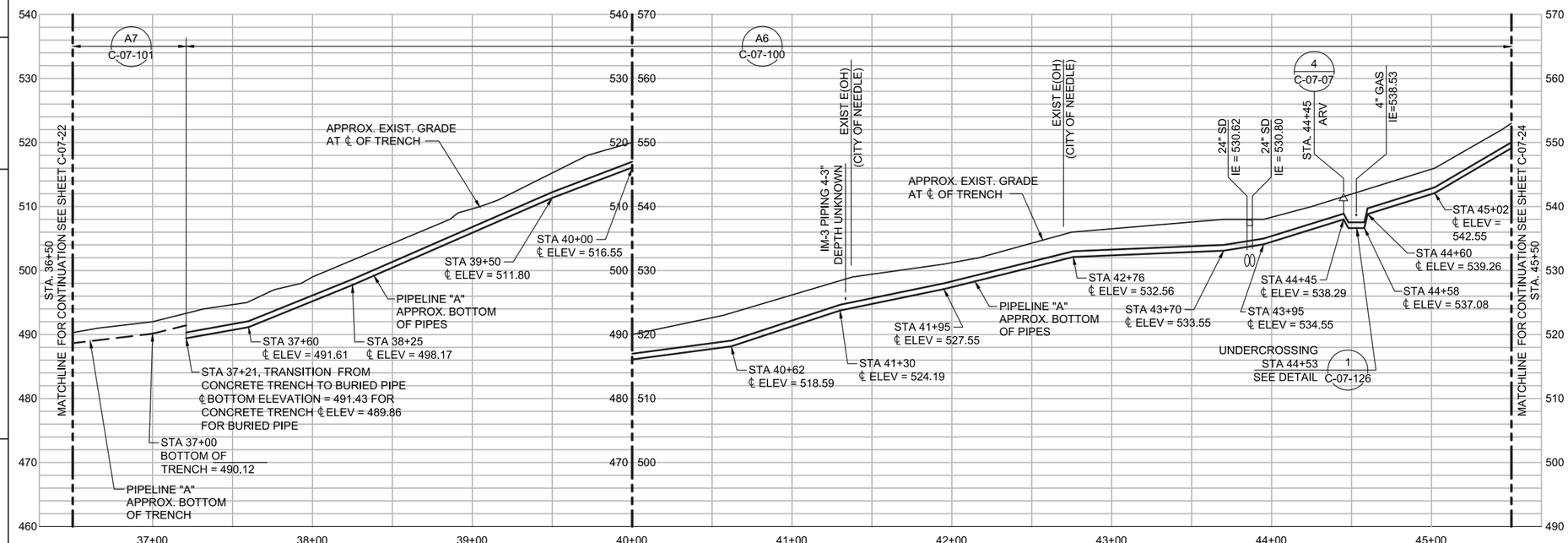

PIPELINE "A" - PROFILE

(SCALE: 1" = 40' H; 1" = 10' V)

NOTES:

1. THE NEW PIPELINE ALIGNMENT SHOWS CENTER OF TRENCH.
2. PROVIDE VEHICLE ACCESS AT OWNER'S DIRECTION.
3. MAINTAIN 3' MINIMUM HORIZONTAL CLEARANCE FROM EXISTING IM-3 PIPING (E, T, TW, BR & FO)
4. MAINTAIN 3' MINIMUM HORIZONTAL CLEARANCE FROM EXISTING GAS PIPING.
5. FOR ELECTRICAL (PDX-DXX) AND COMMUNICATIONS (PDX-TXX) SEE DWGS E-00-07 AND E-00-08

Point Table

Point	Descrip-tion	Sta	Northing	Easting
P36	PI	36+78.23	2103000.45	7614917.88
P37	EC	37+21.36	2102957.92	7614928.08
P38	BC	38+13.50	2102868.32	7614949.55
P39	PI	38+53.72	2102829.20	7614958.93
P40	EC	38+92.10	2102800.03	7614986.62
P41	BC	39+59.06	2102751.46	7615032.71
P42	PI	40+16.42	2102709.85	7615072.20
P43	EC	40+66.08	2102652.99	7615064.62
P44	BC	41+94.72	2102525.48	7615047.61
P45	PI	42+28.45	2102492.05	7615043.15
P46	EC	42+50.76	2102482.01	7615075.35

Line Table

Line	Beg Point	End Point	Distance	Bearing
L13	P37	P38	92.14	S 13° 28' 31" E
L14	P40	P41	66.96	S 43° 29' 57" E
L15	P43	P44	128.64	S 07° 05' 24" E
L16	P46	P47	328.70	S 75° 12' 36" E

Curve Table

Curve	Beg Point	End Point	Distance	Δ	Radius	Tangent
C12	P35	P37	86.87	30° 35' 29"	300.00	43.74
C13	P38	P40	78.60	30° 01' 22"	150.00	40.22
C14	P41	P43	107.02	51° 05' 57"	120.00	57.36
C15	P44	P46	56.04	80° 16' 28"	40.00	33.73

0 40 80 120
HORZ: SCALE: 1"=40'

0 10 20 30
VERT: SCALE: 1"=10'

DRAFT
NOT FOR
CONSTRUCTION

E2 Consulting Engineers, Inc.
1900 Powell Street, Ste. 250
Emeryville, CA 94608
(510) 652-1164

CH2MHILL.

NO.	DATE	DESCRIPTION	GM/SPEC	DWN	CHKD	SUPV	APVD BY
2	9/8/14	PRE-FINAL (90%) DESIGN		PH	PT	PT	VMB
1	4/5/13	INTERMEDIATE (60%) DESIGN		PC/EE	PT	PT	VMB
0	11/18/11	PRELIMINARY (30%) DESIGN		EE	PT	PT	VMB

REVISIONS

APPROVED BY
ISO
SUPV VMB
DSGN PT
DWN PC/EE
CHKD VMB
OK VMB
DATE 09/08/14
SCALES

TOPOCK GROUNDWATER REMEDIATION PROJECT
PLAN AND PROFILE
PIPELINE "A"
STA 36+50 TO STA 45+00
GAS TRANSMISSION & DISTRIBUTION
PACIFIC GAS AND ELECTRIC COMPANY
SAN FRANCISCO, CALIFORNIA

MICROFILM
BILL OF MATL
DWG LIST
SUPSDS
SUPSD BY
SHEET NO. of SHEETS
C-07-23
REV 2

FILENAME: E2-C-XXX-0723.dwg
PLOT DATE: $PLOTDATE PLOT TIME: $PLOTTIME
C:\Users\peter.hubbard\CAD\Topock\E2-C-XXX-0723.dwg, 22X34, 9/5/2014 2:26:37 PM
N1808

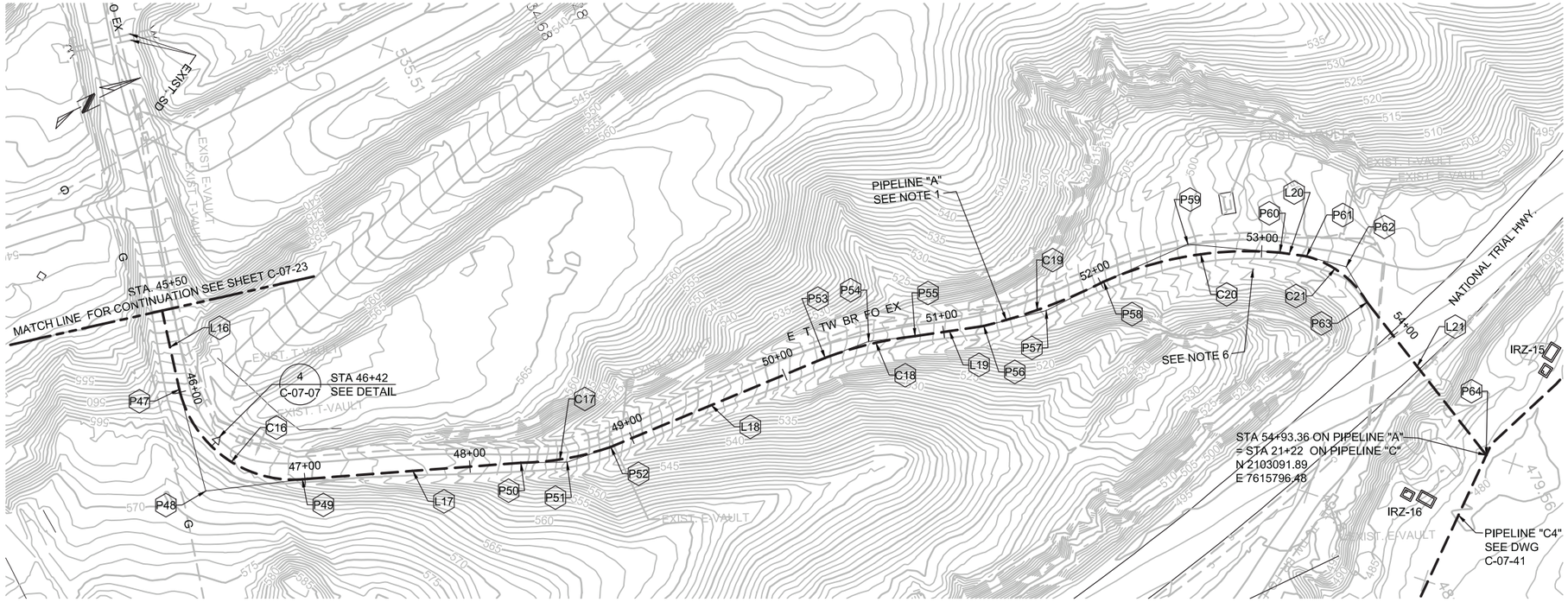

PIPELINE "A" - PLAN

(SCALE: 1" = 40' H)

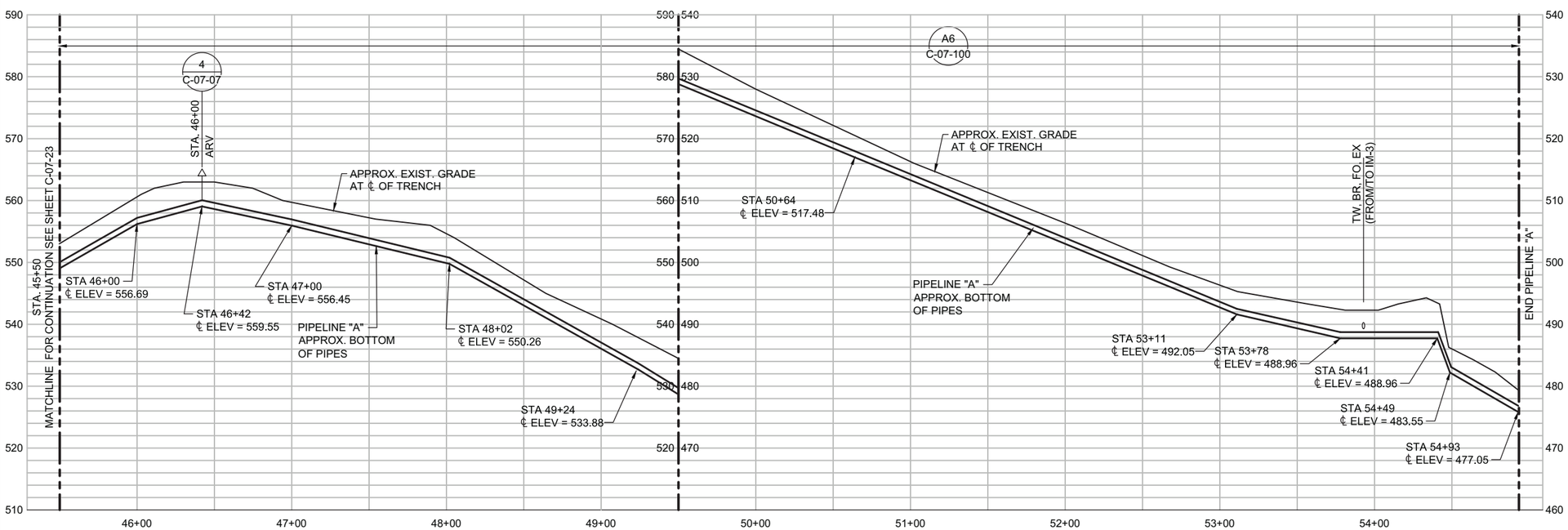

PIPELINE "A" - PROFILE

(SCALE: 1" = 40' H; 1" = 10' V)

NOTES:

1. THE NEW PIPELINE ALIGNMENT SHOWS CENTER OF TRENCH.
2. PROVIDE TRAFFIC CONTROL WHEN WORKING IN / NEAR ROADWAYS. COMPLY WITH OWNER'S ENCROACHMENT PERMIT WHEN WORKING IN ROAD RIGHT OF WAY.
3. PROVIDE VEHICLE ACCESS AT OWNER'S DIRECTION.
4. MAINTAIN 3' MINIMUM HORIZONTAL CLEARANCE FROM EXISTING IM-3 PIPING (E, T, TW, BR & FO)
5. MAINTAIN 3' MINIMUM HORIZONTAL CLEARANCE FROM EXISTING GAS PIPING.
6. PRESERVE AND MAINTAIN EXISTING DRAINAGE DITCH

Point Table

Point	Description	Sta	Northing	Easting
P47	BC	45+91.43	2102395.16	7615404.76
P48	PI	46+54.02	2102382.21	7615465.99
P49	EC	46+94.39	2102441.12	7615487.18
P50	BC	48+25.18	2102562.16	7615536.73
P51	PI	48+53.43	2102587.61	7615549.00
P52	EC	48+81.21	2102615.63	7615552.64
P53	BC	50+23.07	2102757.14	7615562.56
P54	PI	50+51.56	2102785.48	7615565.51
P55	EC	50+79.76	2102812.23	7615575.30
P56	BC	51+22.20	2102852.56	7615588.53
P57	PI	51+61.49	2102890.87	7615597.22
P58	EC, BC	52+00.44	2102930.16	7615597.10
P59	PI	52+56.89	2102986.55	7615599.66
P60	EC	53+10.88	2103034.52	7615629.42
P61	BC	53+27.24	2103048.01	7615638.68
P62	PI	53+52.37	2103066.90	7615655.25
P63	EC	53+74.89	2103068.58	7615680.32
P64	PI	54+93.36	2103091.89	7615796.48

Line Table

Line	Beg Point	End Point	Distance	Bearing
L16	P46	P47	340.67	S 75° 13' 48" E
L17	P49	P50	130.79	N 22° 15' 46" E
L18	P52	P53	141.86	N 04° 00' 36" E
L19	P55	P56	42.44	N 18° 09' 42" E
L20	P60	P61	16.36	N 34° 28' 01" E
L21	P63	P64	118.47	N 78° 39' 11" E

Curve Table

Curve	Beg Point	End Point	Distance	Δ	Radius	Tangent
C16	P47	P49	102.96	82° 09' 48"	71.80	62.59
C17	P50	P52	56.03	18° 18' 55"	175.27	28.25
C18	P53	P55	56.69	14° 10' 35"	229.11	28.49
C19	P56	P58	78.24	12° 57' 00"	346.16	39.29
C20	P58	P60	110.44	29° 12' 09"	216.70	56.45
C21	P61	P63	47.65	44° 54' 45"	60.79	25.13

0 40 80 120
HORZ: SCALE: 1"=40'

0 10 20 30
VERT: SCALE: 1"=10'

DRAFT
NOT FOR
CONSTRUCTION

E2 Consulting Engineers, Inc.
1900 Powell Street, Ste. 250
Emeryville, CA 94608
(510) 652-1164

CH2MHILL.

NO.	DATE	DESCRIPTION	GM/SPEC	DWN	CHKD	SUPV	APVD BY
2	9/8/14	PRE-FINAL (90%) DESIGN		PH	PT	PT	VMB
1	4/5/13	INTERMEDIATE (60%) DESIGN		PC/EE	PT	PT	VMB
0	11/18/11	PRELIMINARY (30%) DESIGN		EE	PT	PT	VMB

REVISIONS

APPROVED BY: SO
SUPV VMB
DSGN PT
DWN PC/EE
CHKD VMB
OK VMB
DATE 09/08/14
SCALES

TOPOCK GROUNDWATER REMEDIATION PROJECT
PLAN AND PROFILE
PIPELINE "A"
STA 45+50 TO STA 54+93.36
GAS TRANSMISSION & DISTRIBUTION
PACIFIC GAS AND ELECTRIC COMPANY
SAN FRANCISCO, CALIFORNIA

MICROFILM
BILL OF MATL
DWG LIST
SUPSDS
SUPSD BY
SHEET NO. of SHEETS
C-07-24
REV 2

FILENAME: E2-C-XXX-0724.dwg
PLOT DATE: $PLOTDATE PLOT TIME: $PLOTTIME
C:\Users\peter.hubbard\CAD\Topock\E2-C-XXX-0724.dwg 22X34 9/5/2014 2:27:09 PM
N1808

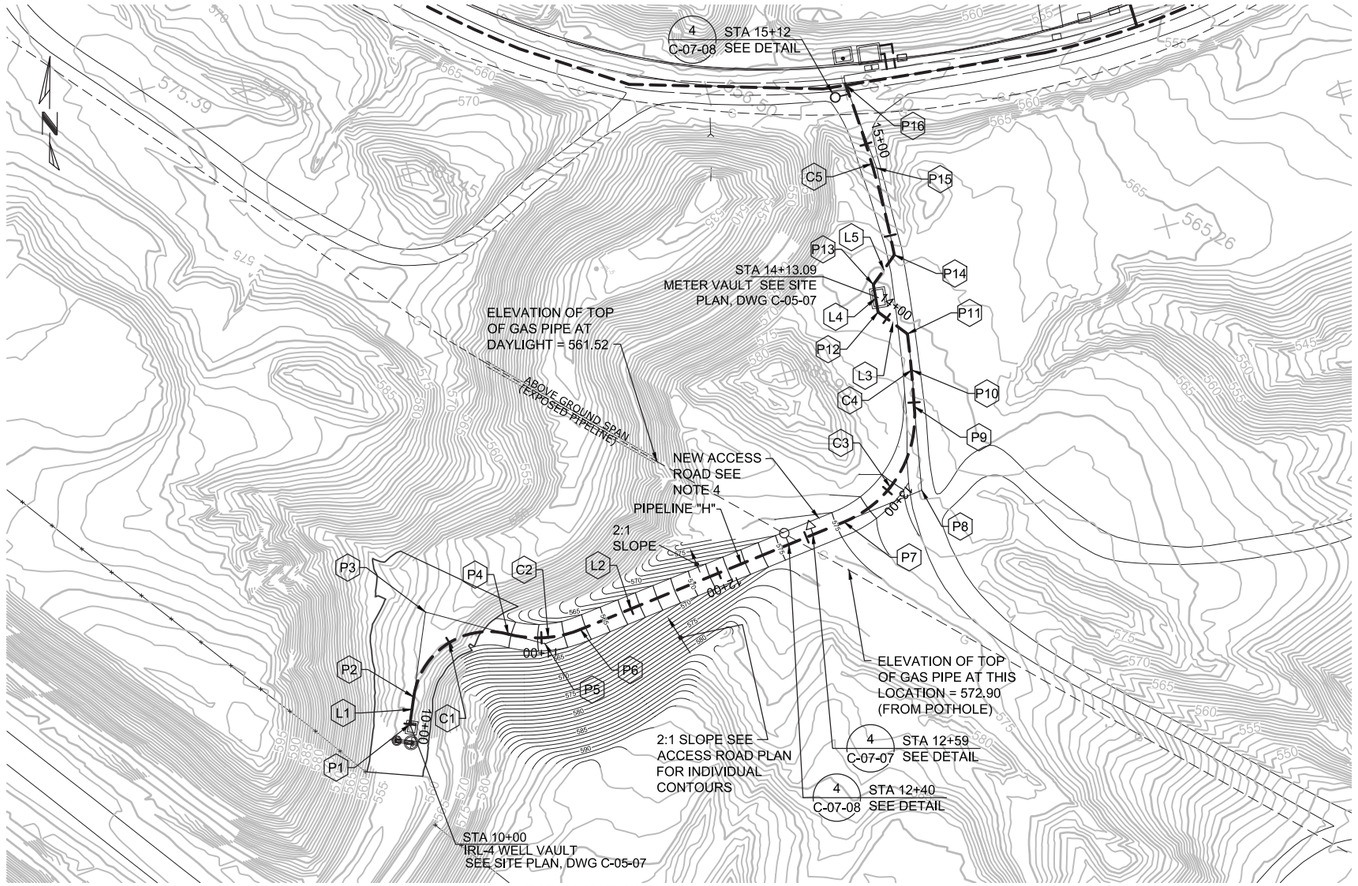

PIPELINE "H" - PLAN

(SCALE: 1" = 40' H)

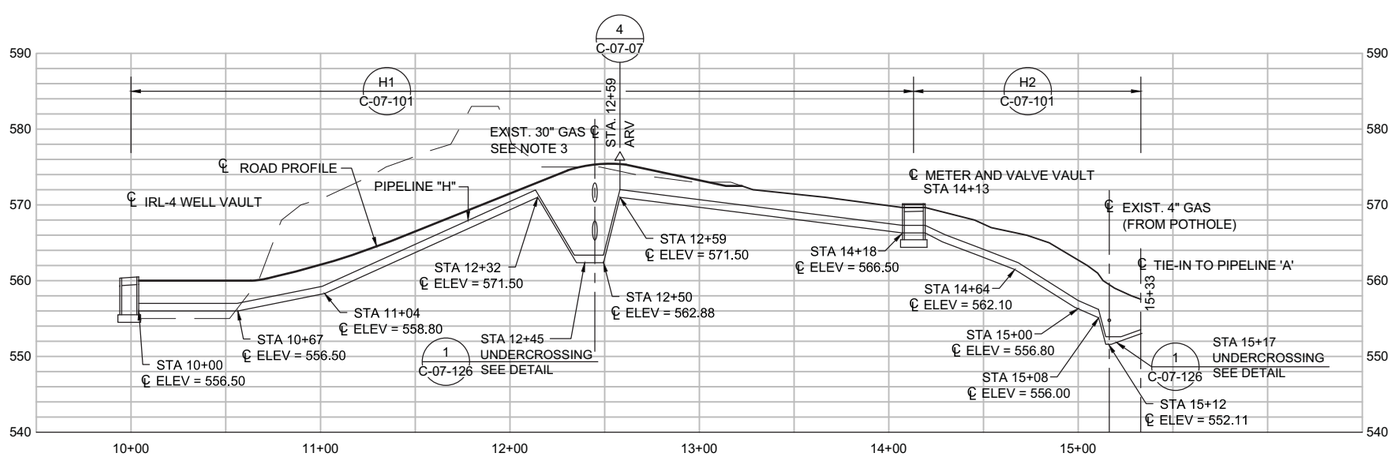

PIPELINE "H" - PROFILE

(SCALE: 1" = 40' H; 1" = 10' V)

Point Table				
Point	Description	Sta	Northing	Easting
P1	Well	10+00.00	2102380.66	7613953.83
P2	BC	10+14.59	2102394.17	7613948.33
P3	PI	10+59.83	2102436.07	7613931.28
P4	EC, BC	10+82.33	2102447.87	7613974.95
P5	PI	11+02.43	2102453.14	7613994.35
P6	EC	11+19.58	2102468.99	7614006.71
P7	BC	12+69.91	2102587.76	7614098.87
P8	PI	13+14.24	2102622.78	7614126.04
P9	EC, BC	13+46.26	2102659.05	7614100.55
P10	PI	13+65.54	2102675.12	7614089.90
P11	EC	13+84.80	2102690.45	7614078.21
P12	PI	14+04.04	2102692.69	7614059.10
P13	PI	14+18.94	2102704.24	7614049.68
P14	BC	14+37.90	2102723.12	7614051.41
P15	PI	14+84.64	2102758.16	7614020.48
P16	EC	15+31.19	2102787.86	7613984.38

Line Table				
Line	Beg Point	End Point	Distance	Bearing
L1	P1	P2	14.59	N 22° 09' 05"W
L2	P6	P7	150.33	N 37° 48' 35"E
L3	P11	P12	19.24	N 83° 18' 52"W
L4	P12	P13	14.90	N 39° 12' 01"W
L6	P13	P14	18.96	N 22° 09' 05"W

Curve Table						
Curve	Beg Point	End Point	Distance	Δ	Radius	Tangent
C1	P2	P4	67.74	97° 01' 50"	40.00	45.24
C2	P4	P6	37.25	53° 21' 43"	40.00	20.10
C3	P7	P9	76.35	72° 54' 48"	60.00	44.33
C4	P9	P11	38.54	03° 45' 58"	586.36	19.28
C5	P14	P16	93.29	09° 06' 56"	586.36	46.74

NOTES:

1. THE NEW PIPELINE ALIGNMENT SHOWS CENTER OF TRENCH.
2. ASSUMED DEPTH AND APPROXIMATE LOCATION ARE SHOWN. LOCATE BY POTHOLING BEFORE STARTING CONSTRUCTION. COORDINATE WITH PG&E TO RELOCATE INTERFERING UTILITIES AS NECESSARY TO ACCOMMODATE PIPELINE H.
3. TWO POTENTIAL ELEVATIONS ARE SHOWN FOR THE EXISTING 30 INCH GAS PIPELINE. ONE ELEVATION DENOTES A STRAIGHT LINE INTERPOLATION BETWEEN POTHOLE ELEVATION 35' EAST OF NEW PIPELINE CROSSING AND DAYLIGHT ELEVATION OF PIPE 85' WEST OF NEW PIPELINE CROSSING TOP OF PIPE = 567.88' AND BOTTOM OF PIPE = 565.38. THE OTHER ELEVATION ASSUMES THAT GAS PIPELINE IS LEVEL FROM POTHOLE TO PIPELINE CROSSING AND THAT PIPE DESCENDS AFTER PIPELINE CROSSING. TOP OF PIPE = 572.90 BOTTOM OF PIPE = 570.40. CONTRACTOR SHALL POTHOLE AT NEW PIPELINE CROSSING TO DETERMINE EXACT LOCATION.
4. FOR NEW ACCESS ROAD PLAN, PROFILE AND SECTIONS SEE DRAWINGS C-05-01 & C-05-02

0 40 80 120
HORZ: SCALE: 1"=40'
0 10 20 30
VERT: SCALE: 1"=10'

DRAFT NOT FOR CONSTRUCTION

E2 Consulting Engineers, Inc.
1900 Powell Street, Ste. 250
Emeryville, CA 94608
(510) 652-1164

CH2MHILL.

NO.	DATE	DESCRIPTION	GM/SPEC	DWN	CHKD	SUPV	APVD BY
2	9/8/14	PRE-FINAL (90%) DESIGN		PH	PT	PT	VMB

REVISIONS

APPROVED BY
SO
SUPV VMB
DSGN PT
DWN PC
CHKD VMB
OK VMB
DATE 09/08/14
SCALES

TOPOCK GROUNDWATER REMEDIATION PROJECT
PLAN AND PROFILE
PIPELINE "H"
STA 10+00 TO STA 15+33
GAS TRANSMISSION & DISTRIBUTION
PACIFIC GAS AND ELECTRIC COMPANY
SAN FRANCISCO, CALIFORNIA

MICROFILM
BILL OF MATL
DWG LIST
SUPSDS
SUPSD BY
SHEET NO. of SHEETS
C-07-25 REV 2

PLOT DATE: $PLOTDATE PLOT TIME: $PLOTTIME
FILENAME: E2-C-XXX-0725.dwg

N1808
C:\Users\peter.hubbard\CAD\Topock\E2-C-XXX-0725.dwg, 22x34, 9/8/2014 2:21:55 PM

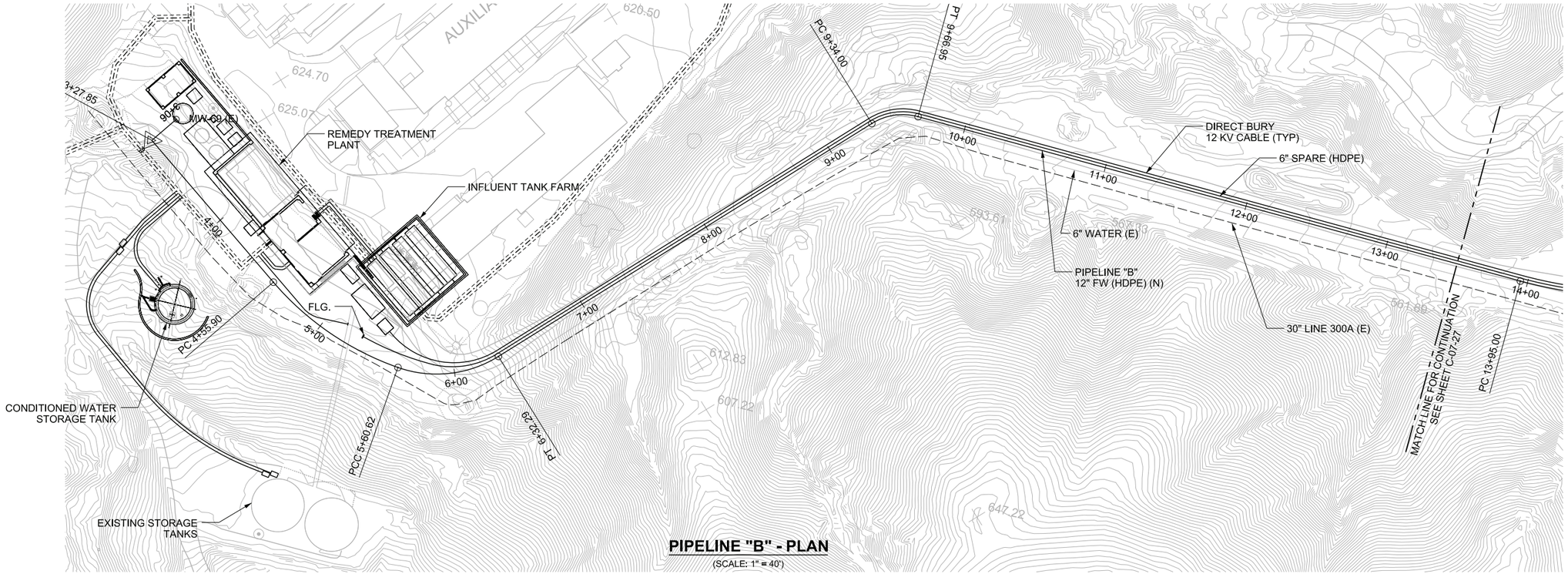

PIPELINE "B" - PLAN

(SCALE: 1" = 40')

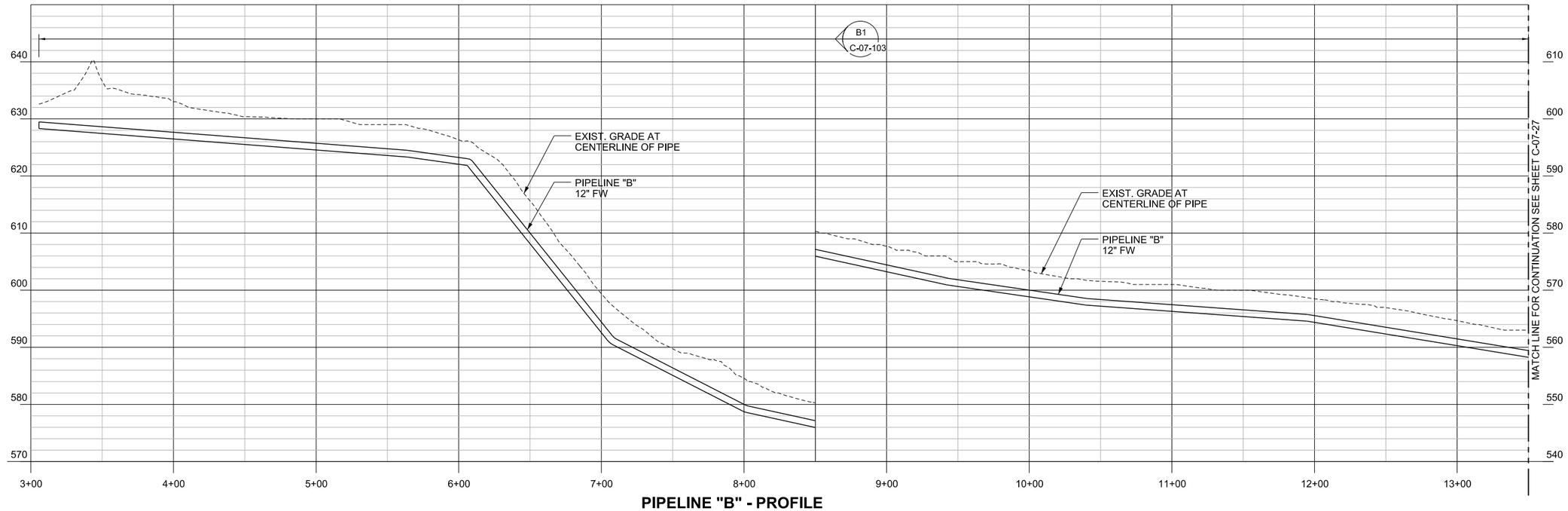

PIPELINE "B" - PROFILE

(SCALE: 1" = 40' H; 1" = 10' V)

0 40 80 120
HORIZ: SCALE: 1"=40'

0 10 20 30
VERT: SCALE: 1"=10'

- DRAFT - NOT FOR CONSTRUCTION

AECOM
2101 WEBSTER STREET SUITE 1000
OAKLAND, CA 94612-3060
PROJECT NO. 60272335

NO.	DATE	DESCRIPTION	GM/SPEC	DWN	CHKD	SUPV	APVD BY
1	9/8/14	PRE-FINAL(90%) DESIGN					
0	4/5/13	INTERMEDIATE (60%) DESIGN					

REVISIONS

APPROVED BY

SO	XXXXX
SUPV	PD
DSGN	GO
DWN	LD
CHKD	JM
OK	PD
DATE	9/8/14
SCALES	1" = 40'-0"

TOPOCK GROUNDWATER REMEDIATION PROJECT
PLAN AND PROFILE
PIPELINE "B"
STA 3+05 TO STA 13+50
GAS TRANSMISSION & DISTRIBUTION
PACIFIC GAS AND ELECTRIC COMPANY
SAN FRANCISCO, CALIFORNIA

MICROFILM
BILL OF MATL
DWG LIST
SUPSDS
SUPSD BY
SHEET NO. OF SHEETS
C-07-26
REV 1

N1808

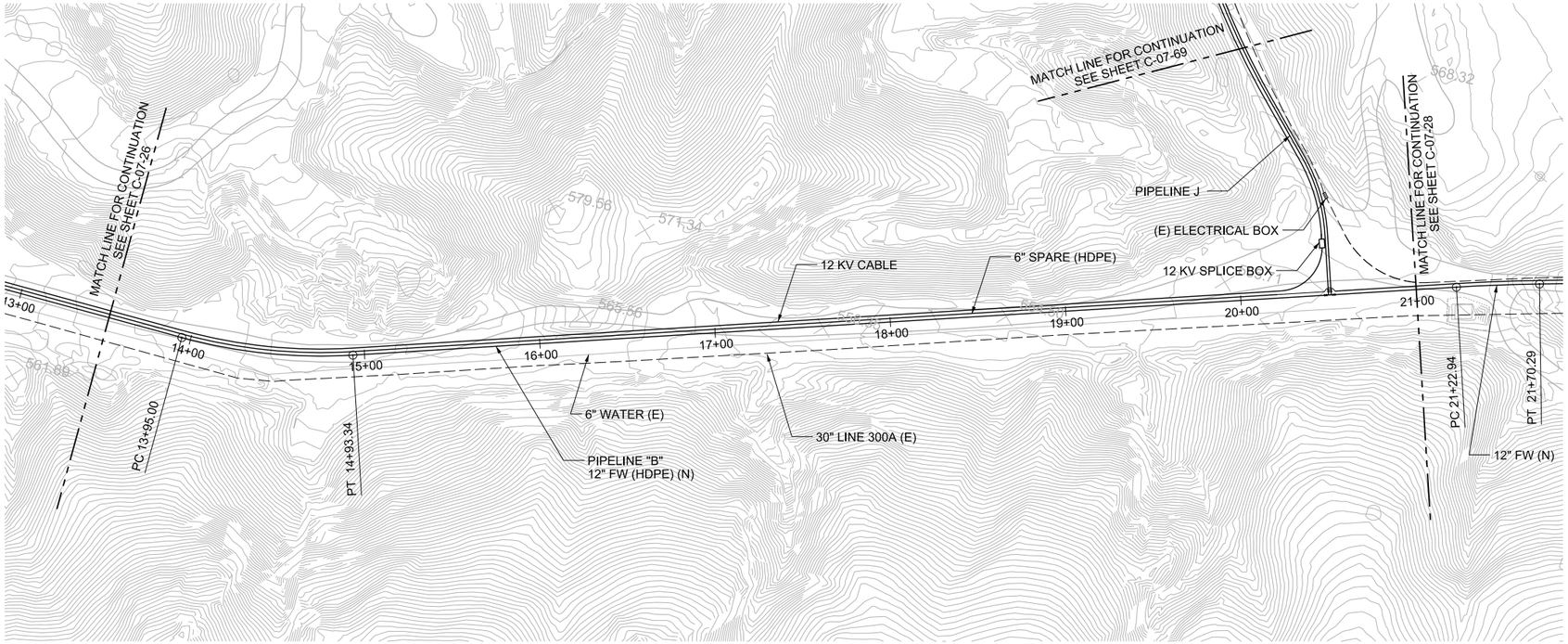

PIPELINE "B" - PLAN

(SCALE: 1" = 40')

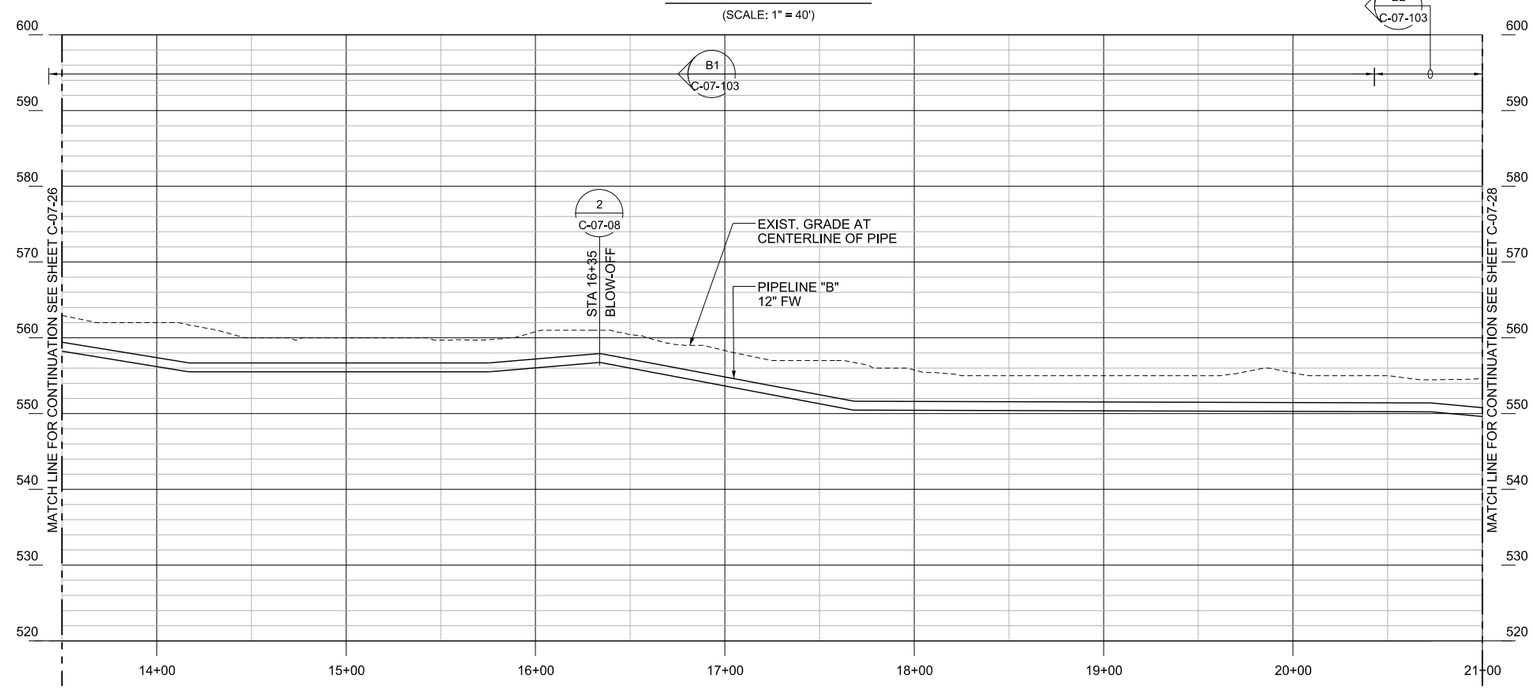

PIPELINE "B" - PROFILE

(SCALE: 1" = 40' H; 1" = 10' V)

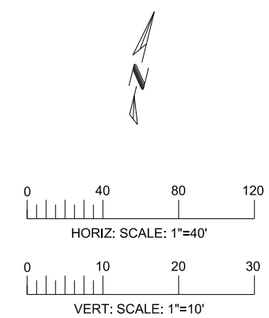

- DRAFT -
NOT FOR CONSTRUCTION

AECOM

2101 WEBSTER STREET SUITE 1000
OAKLAND, CA 94612-3060

PROJECT NO. 60272335

NO.	DATE	DESCRIPTION	GM/SPEC	DWN	CHKD	SUPV	APVD BY
1	9/8/14	PRE-FINAL (90%) DESIGN					
0	4/5/13	INTERMEDIATE (60%) DESIGN					

REVISIONS

APPROVED BY	
SO	XXXXX
SUPV	PD
DSGN	GO
DWN	LD
CHKD	JM
OK	PD
DATE	9/8/14
SCALES	1" = 40'-0"

TOPOCK GROUNDWATER REMEDIATION PROJECT
PLAN AND PROFILE
PIPELINE "B"
STA 13+50 TO STA 21+00
GAS TRANSMISSION & DISTRIBUTION
PACIFIC GAS AND ELECTRIC COMPANY
SAN FRANCISCO, CALIFORNIA

MICROFILM
BILL OF MATL
DWG LIST
SUPSDS
SUPSD BY

SHEET NO. C-07-27 OF SHEETS REV 1

N1808

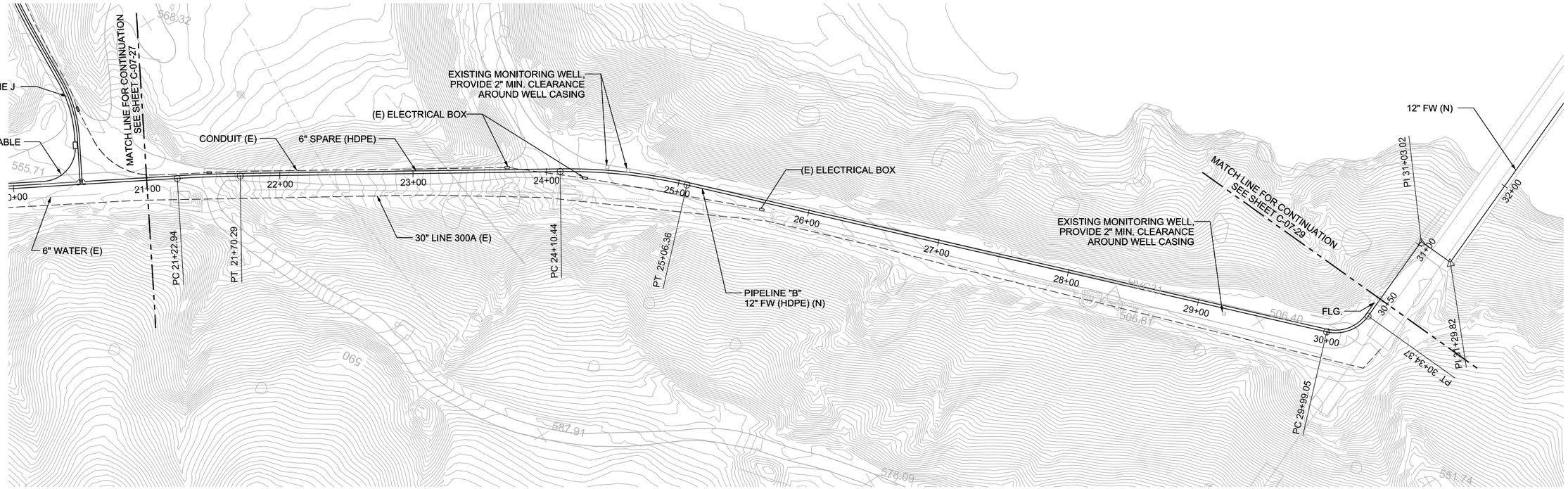

PIPELINE "B" - PLAN

(SCALE: 1" = 40')

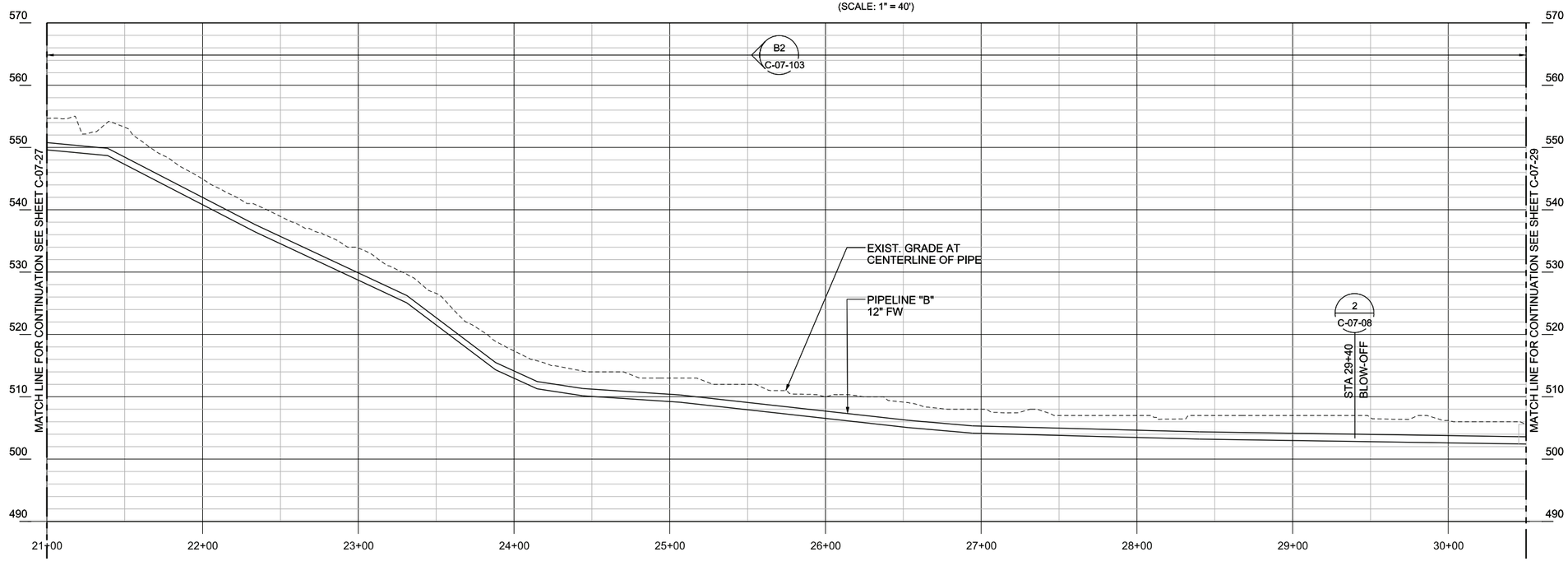

PIPELINE "B" - PROFILE

(SCALE: 1" = 40' H; 1" = 10' V)

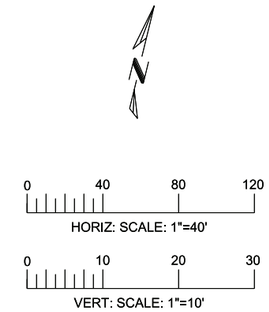

B2
C-07-103

- DRAFT - NOT FOR CONSTRUCTION

AECOM

2101 WEBSTER STREET SUITE 1000
OAKLAND, CA 94612-3060

PROJECT NO. 60272335

NO.	DATE	DESCRIPTION	GM/SPEC	DWN	CHKD	SUPV	APVD BY
0	9/8/14	PRE-FINAL (90%) DESIGN					

REVISIONS

APPROVED BY		
	SO	XXXXX
	SUPV	PD
	DSGN	GO
	DWN	LD
	CHKD	JM
	OK	PD
	DATE	9/8/14
	SCALES	1" = 40'-0"

TOPOCK GROUNDWATER REMEDIATION PROJECT
PLAN AND PROFILE
PIPELINE "B"
STA 21+00 TO STA 30+50
GAS TRANSMISSION & DISTRIBUTION
PACIFIC GAS AND ELECTRIC COMPANY
SAN FRANCISCO, CALIFORNIA

MICROFILM	
BILL OF MATL	
DWG LIST	
SUPSDS	
SUPSD BY	
SHEET NO. OF SHEETS	
C-07-28	REV 0

N1808

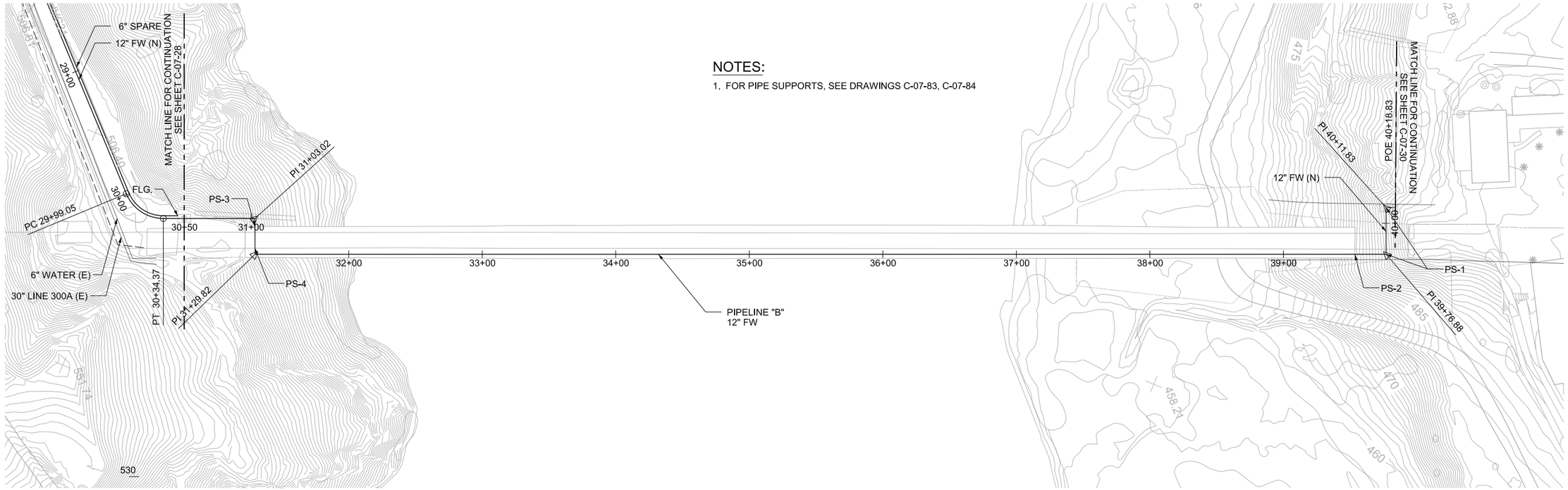

NOTES:

1. FOR PIPE SUPPORTS, SEE DRAWINGS C-07-83, C-07-84

PIPELINE "B" - PLAN

(SCALE: 1" = 40')

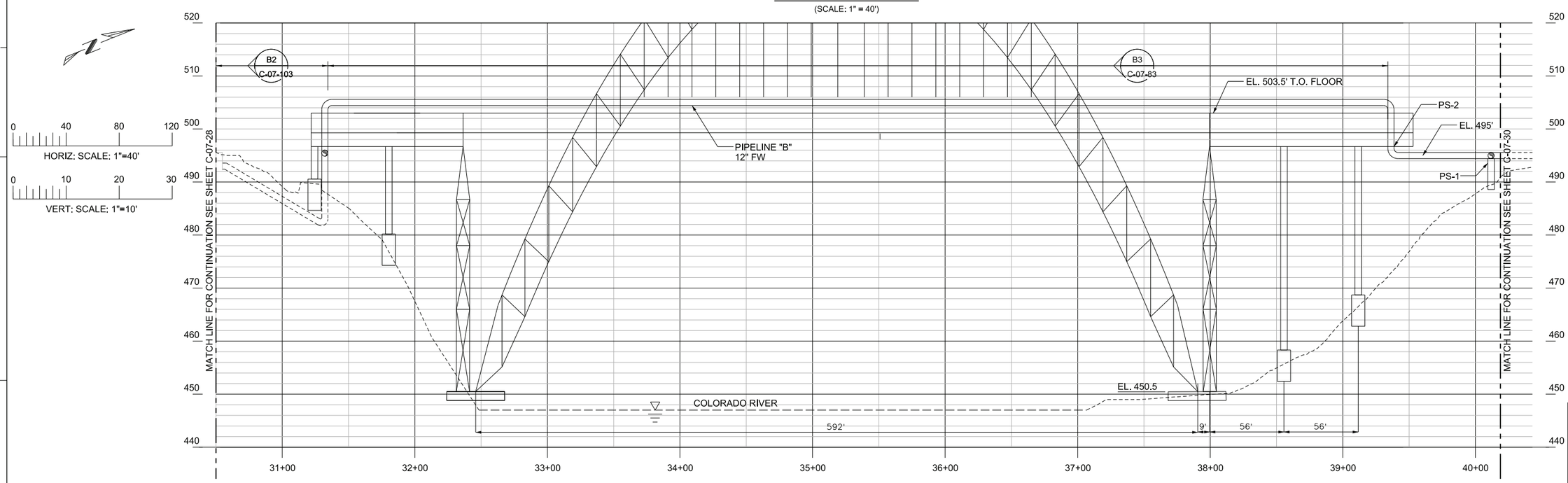

PIPELINE "B" - PROFILE

(SCALE: 1" = 40' H; 1" = 10' V)

- DRAFT - NOT FOR CONSTRUCTION

AECOM
2101 WEBSTER STREET SUITE 1000
OAKLAND, CA 94612-3060
PROJECT NO. 60272335

NO.	DATE	DESCRIPTION	GM/SPEC	DWN	CHKD	SUPV	APVD BY
0	9/8/14	PRE-FINAL (90%) DESIGN					

REVISIONS

APPROVED BY	
SO	XXXXX
SUPV	PD
DSGN	GO
DWN	LD
CHKD	JM
OK	PD
DATE	9/8/14
SCALES	1" = 40'-0"

TOPOCK GROUNDWATER REMEDIATION PROJECT
PLAN AND PROFILE
PIPELINE "B"
STA 30+50 TO STA 40+18.83
GAS TRANSMISSION & DISTRIBUTION
PACIFIC GAS AND ELECTRIC COMPANY
SAN FRANCISCO, CALIFORNIA

MICROFILM
BILL OF MATL
DWG LIST
SUPSDS
SUPSD BY
SHEET NO. OF SHEETS
C-07-29
REV 0

N1808

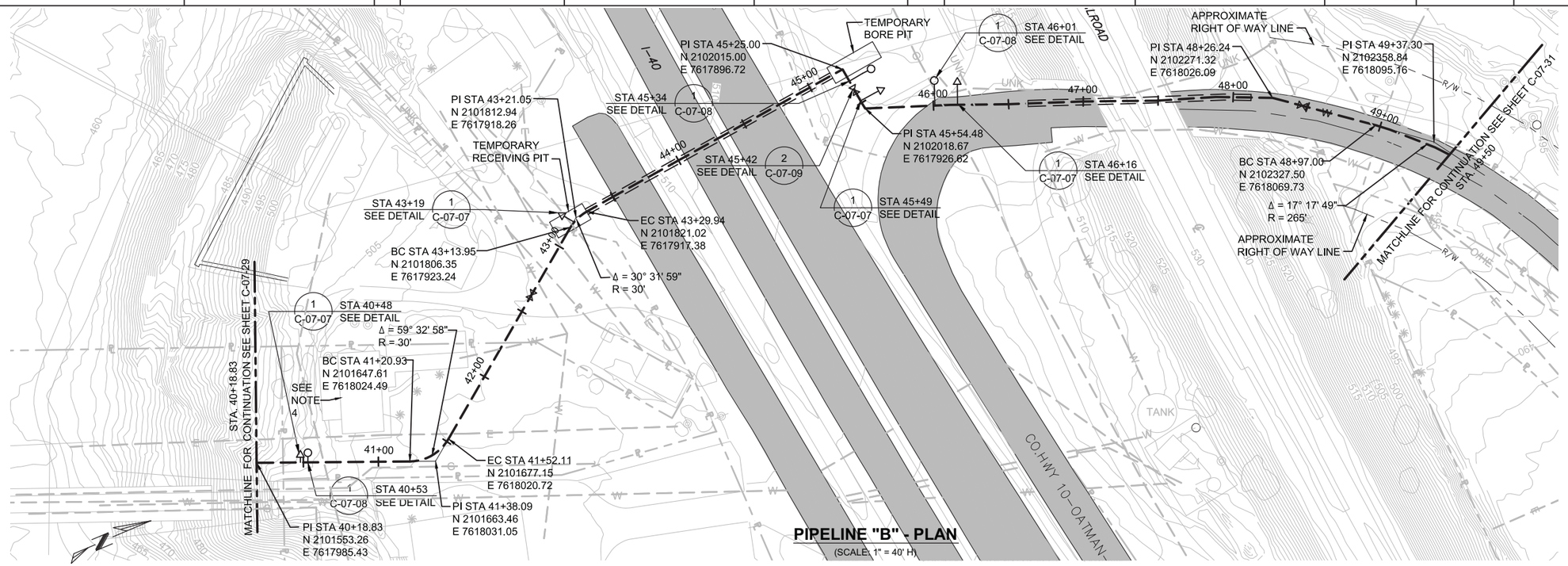

PIPELINE "B" - PLAN

(SCALE: 1" = 40' H)

NOTES:

1. THE NEW PIPELINE ALIGNMENT SHOWS CENTER OF TRENCH.
2. ASSUMED DEPTH AND APPROXIMATE LOCATION ARE SHOWN. LOCATE BY POTHOLING BEFORE STARTING CONSTRUCTION. COORDINATE WITH PG&E TO RELOCATE INTERFERING UTILITIES AS NECESSARY TO ACCOMMODATE PIPELINE B.
3. DESIGN AND PROVIDE CATHODIC PROTECTION AS SPECIFIED.
4. PRESERVE AND PROTECT EXISTING STRUCTURE, TYP.
5. PROVIDE TRAFFIC CONTROL WHEN WORKING IN/NEAR ROADWAYS. COMPLY WITH OWNER'S ENCROACHMENT PERMIT WHEN WORKING IN COUNTY HIGHWAY 10.

0 40 80 120
HORZ: SCALE: 1"=40'

0 10 20 30
VERT: SCALE: 1"=10'

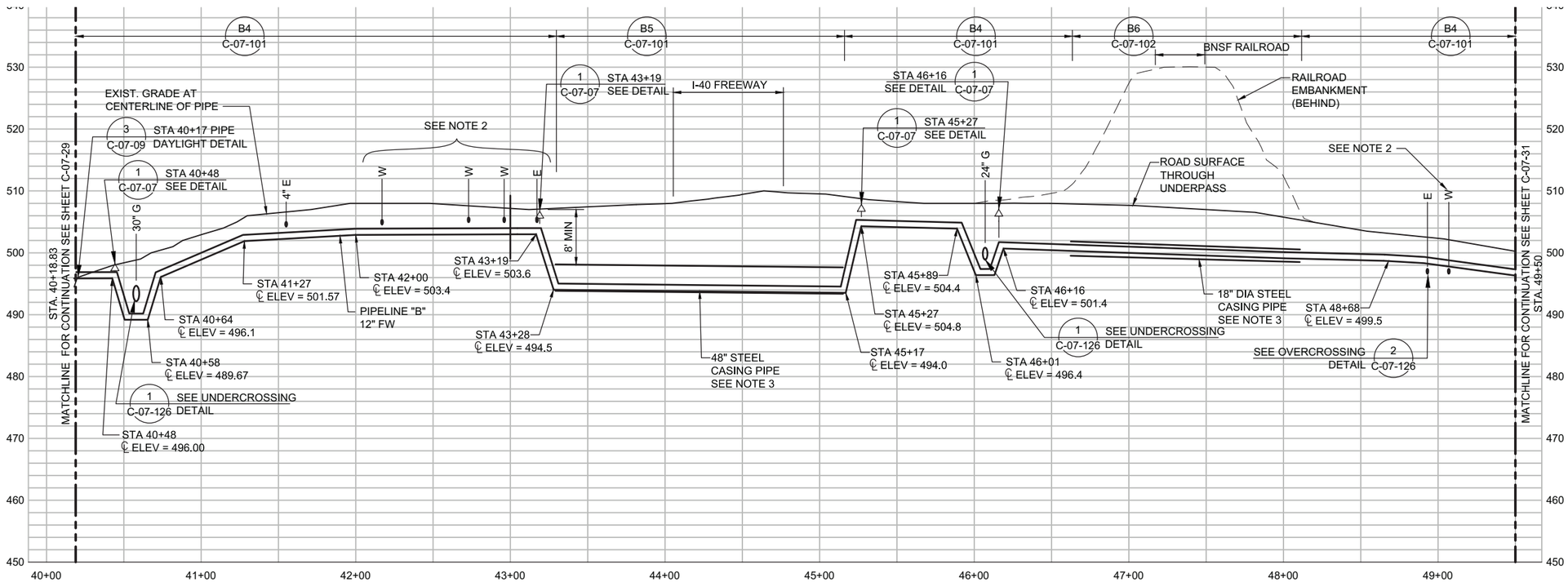

PIPELINE "B" - PROFILE

(SCALE: 1" = 40' H; 1" = 10' V)

DRAFT
NOT FOR
CONSTRUCTION

E2 Consulting Engineers, Inc.
1900 Powell Street, Ste. 250
Emeryville, CA 94608
(510) 652-1164

CH2MHILL.

NO.	DATE	DESCRIPTION	GM/SPEC	DWN	CHKD	SUPV	APVD BY
2	9/8914	PRE-FINAL (90%) DESIGN		PH	VMB	VMB	VMB
1	4/5/13	INTERMEDIATE (60%) DESIGN		PC	VMB	VMB	VMB
0	11/18/11	PRELIMINARY (30%) DESIGN		PC	VMB	VMB	VMB

REVISIONS

APPROVED BY
SO
SUPV VMB
DSGN PT
DWN PH
CHKD VMB
OK VMB
DATE 09/08/14
SCALES 1" = 40'

TOPOCK GROUNDWATER REMEDIATION PROJECT
PLAN AND PROFILE
PIPELINE "B"
STA 40+18.83 TO STA 49+50
GAS TRANSMISSION & DISTRIBUTION
PACIFIC GAS AND ELECTRIC COMPANY
SAN FRANCISCO, CALIFORNIA

MICROFILM
BILL OF MATL
DWG LIST
SUPSDS
SUPSD BY
SHEET NO. of SHEETS
C-07-30
REV 2

FILENAME: E2-C-XXX-0730.dwg
PLOT DATE: $PLOTDATE PLOT TIME: $PLOTTIME
C:\Users\peter.hubbard\CAD\Topock\E2-C-XXX-0730.dwg 22x34, 9/5/2014 4:20:20 PM
N1808

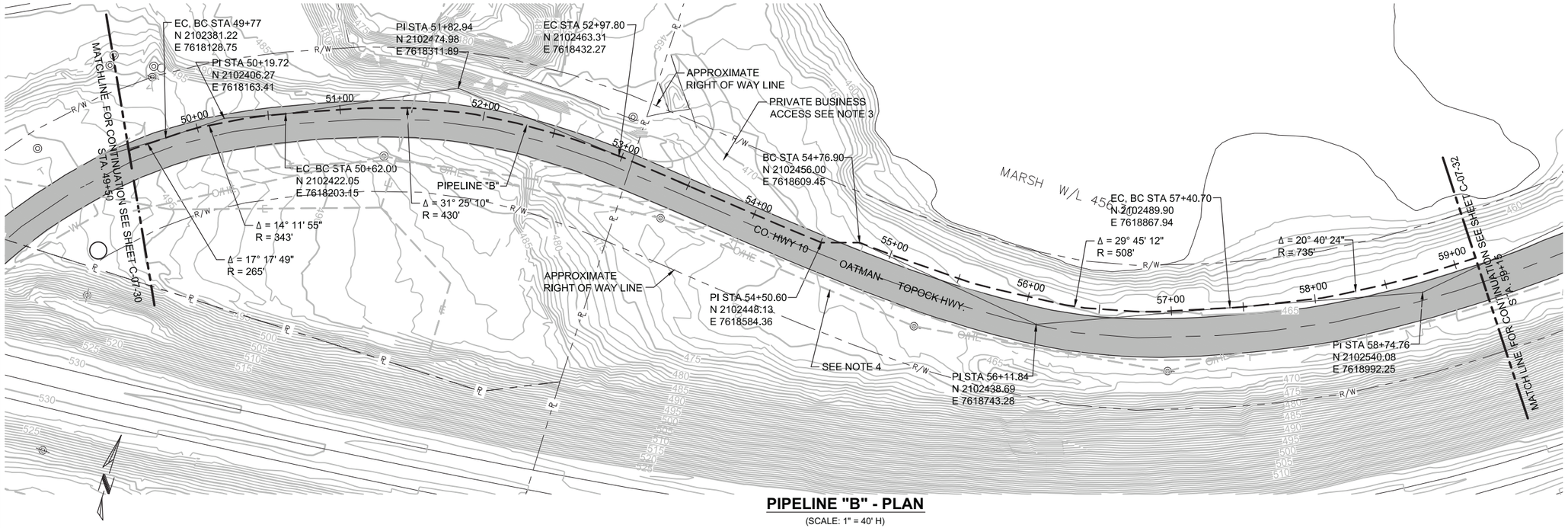

PIPELINE "B" - PLAN

(SCALE: 1" = 40' H)

NOTES:

1. THE NEW PIPELINE ALIGNMENT SHOWS CENTER OF TRENCH.
2. ASSUMED DEPTH AND APPROXIMATE LOCATION ARE SHOWN. LOCATE BY POTHOLING BEFORE STARTING CONSTRUCTION. COORDINATE WITH PG&E TO RELOCATE INTERFERING UTILITIES AS NECESSARY TO ACCOMMODATE PIPELINE B.
3. MAINTAIN CONTINUOUS ACCESS TO PRIVATE BUSINESS DURING CONSTRUCTION. COORDINATE EXACT REQUIREMENTS IN FIELD WITH OWNER.
4. PRESERVE AND PROTECT STRUCTURES, TYP. MAINTAIN SAFE DISTANCE FROM OVERHEAD ELECTRICAL LINES.
5. PROVIDE TRAFFIC CONTROL WHEN WORKING IN/NEAR ROADWAYS. COMPLY WITH OWNER'S ENCROACHMENT PERMIT WHEN WORKING IN COUNTY HIGHWAY 10.

0 40 80 120
HORZ: SCALE: 1"=40'

0 10 20 30
VERT: SCALE: 1"=10'

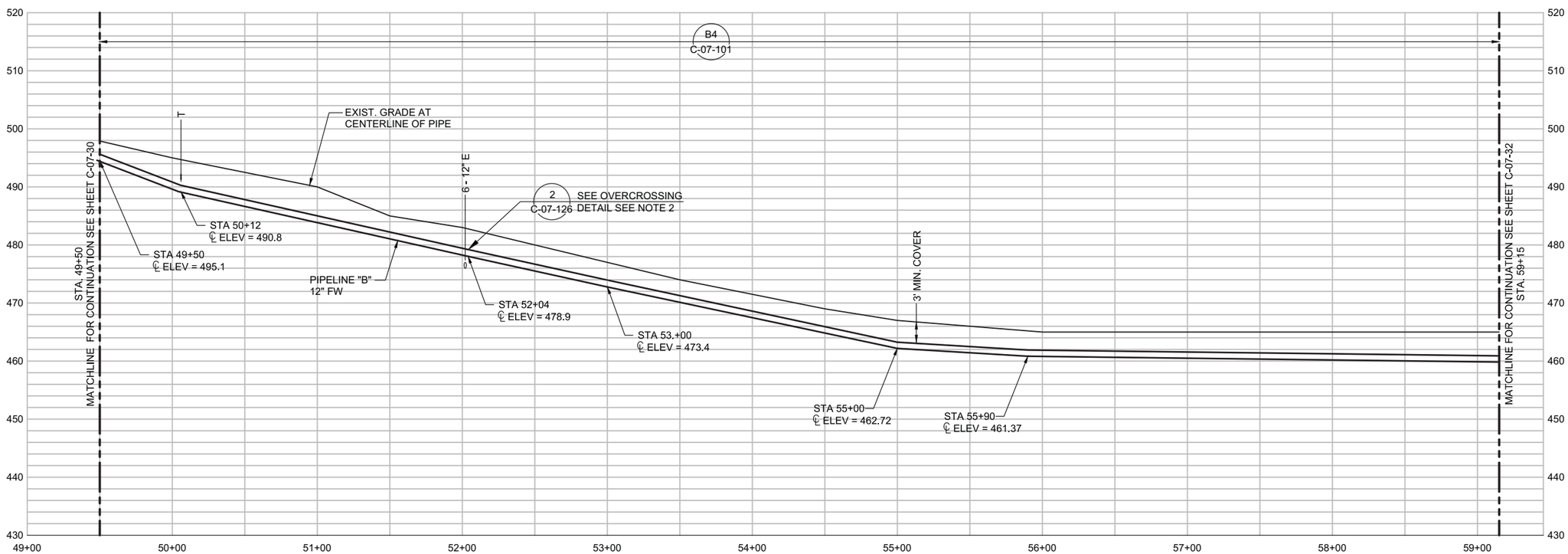

PIPELINE "B" - PROFILE

(SCALE: 1" = 40' H; 1" = 10' V)

DRAFT
NOT FOR
CONSTRUCTION

E2 Consulting Engineers, Inc.
1900 Powell Street, Ste. 250
Emeryville, CA 94608
(510) 652-1164

CH2MHILL.

NO.	DATE	DESCRIPTION	GM/SPEC	DWN	CHKD	SUPV	APVD BY
2	9/8/14	PRE-FINAL (90%) DESIGN		PH	VMB	VMB	VMB
1	4/5/13	INTERMEDIATE (60%) DESIGN		PC	VMB	VMB	VMB
0	11/18/11	PRELIMINARY (30%) DESIGN		PC	VMB	VMB	VMB

REVISIONS

APPROVED BY
SO
SUPV VMB
DSGN PT
DWN PH
CHKD VMB
OK VMB
DATE 09/08/14
SCALES

TOPOCK GROUNDWATER REMEDIATION PROJECT
PLAN AND PROFILE
PIPELINE "B"
STA 49+50 TO STA 59+15
GAS TRANSMISSION & DISTRIBUTION
PACIFIC GAS AND ELECTRIC COMPANY
SAN FRANCISCO, CALIFORNIA

MICROFILM
BILL OF MATL
DWG LIST
SUPSDS
SUPSD BY
SHEET NO. of SHEETS
C-07-31
REV 2

FILENAME: E2-C-XXX-0731.dwg
PLOT DATE: $PLOTDATE PLOT TIME: $PLOTTIME
C:\Users\peter.hubbard\CAD\Topock\E2-C-XXX-0731.dwg, 22X34, 9/5/2014 4:20:50 PM
N1808

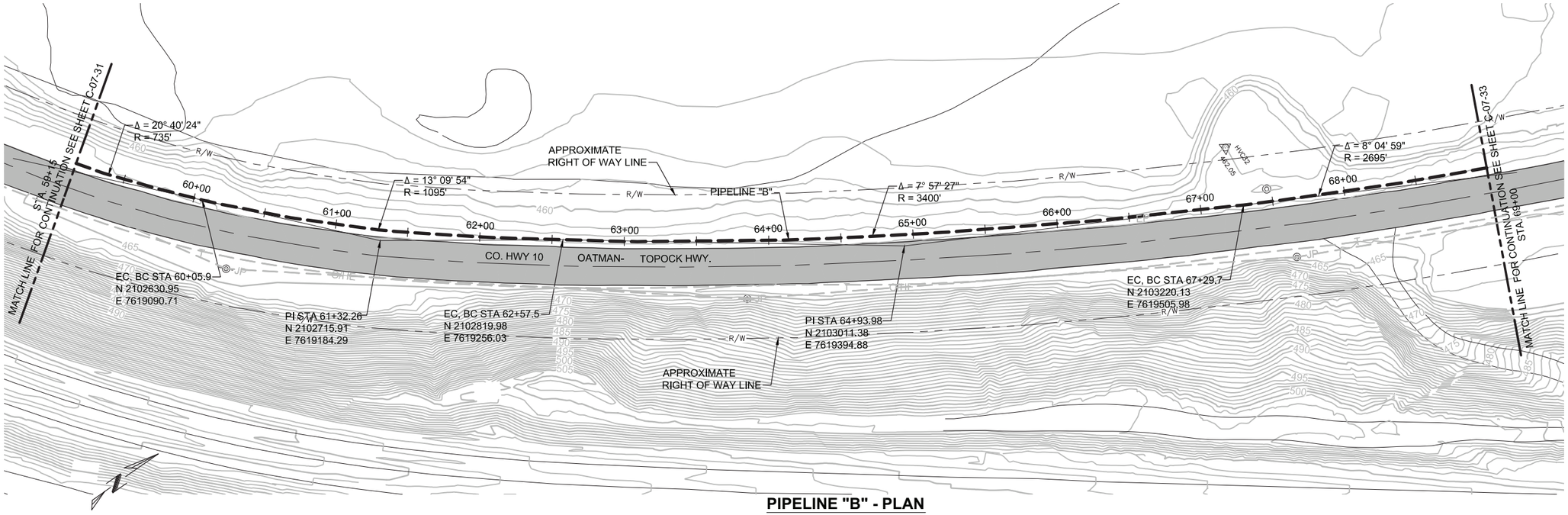

PIPELINE "B" - PLAN

(SCALE: 1" = 40' H)

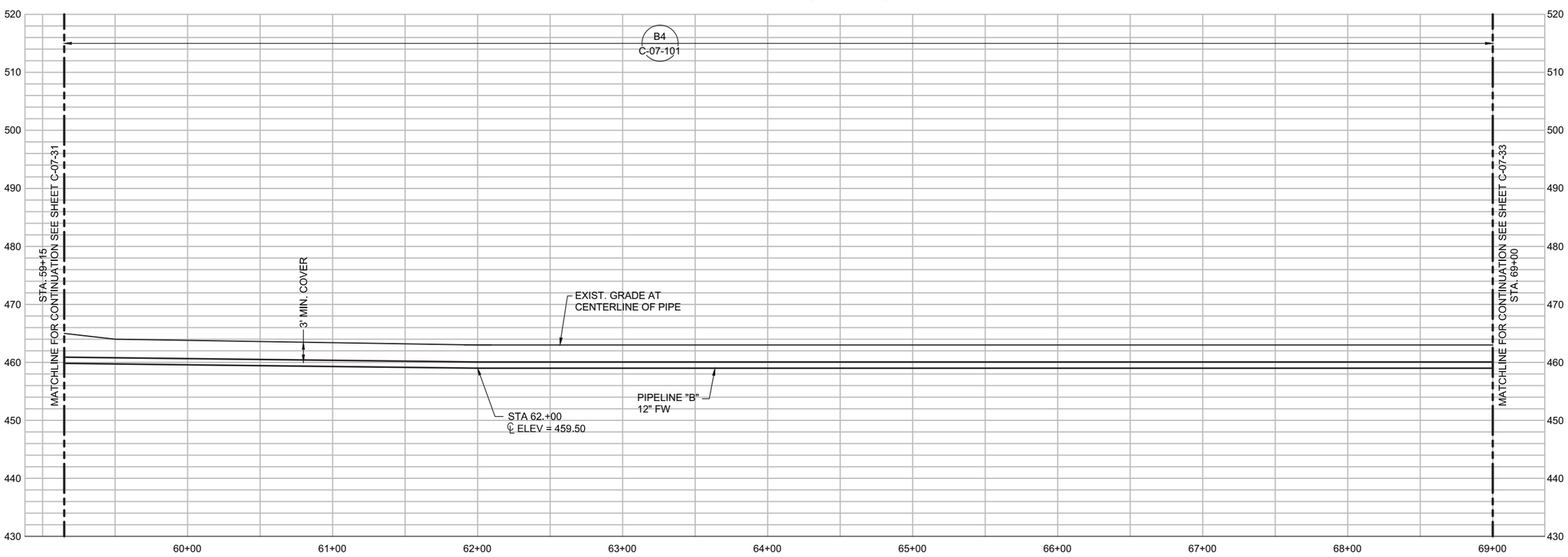

PIPELINE "B" - PROFILE

(SCALE: 1" = 40' H; 1" = 10' V)

NOTES:

1. THE NEW PIPELINE ALIGNMENT SHOWS CENTER OF TRENCH.
2. ASSUMED DEPTH AND APPROXIMATE LOCATION ARE SHOWN. LOCATE BY POTHOLING BEFORE STARTING CONSTRUCTION. COORDINATE WITH PG&E TO RELOCATE INTERFERING UTILITIES AS NECESSARY TO ACCOMMODATE PIPELINE B.
3. MAINTAIN CONTINUOUS ACCESS TO PRIVATE BUSINESS DURING CONSTRUCTION. COORDINATE EXACT REQUIREMENTS IN FIELD WITH OWNER.
4. PRESERVE AND PROTECT STRUCTURES, TYP. MAINTAIN SAFE DISTANCE FROM OVERHEAD ELECTRICAL LINES.
5. PROVIDE TRAFFIC CONTROL WHEN WORKING IN/NEAR ROADWAYS. COMPLY WITH OWNER'S ENCROACHMENT PERMIT WHEN WORKING IN COUNTY HIGHWAY 10.

0 40 80 120
HORZ: SCALE: 1"=40'

0 10 20 30
VERT: SCALE: 1"=10'

DRAFT
NOT FOR
CONSTRUCTION

E2 Consulting Engineers, Inc.
1900 Powell Street, Ste. 250
Emeryville, CA 94608
(510) 652-1164

CH2MHILL.

NO.	DATE	DESCRIPTION	GM/SPEC	DWN	CHKD	SUPV	APVD BY
2	9/8/14	PRE-FINAL (90%) DESIGN		PH	VMB	VMB	VMB
1	4/5/13	INTERMEDIATE (60%) DESIGN		PC	VMB	VMB	VMB
0	11/18/11	PRELIMINARY (30%) DESIGN		PC	VMB	VMB	VMB

REVISIONS

APPROVED BY
SO
SUPV VMB
DSGN PT
DWN PH
CHKD VMB
OK VMB
DATE 09/08/14
SCALES

TOPOCK GROUNDWATER REMEDIATION PROJECT
PLAN AND PROFILE
PIPELINE "B"
STA 59+15 TO STA 69+00
GAS TRANSMISSION & DISTRIBUTION
PACIFIC GAS AND ELECTRIC COMPANY
SAN FRANCISCO, CALIFORNIA

MICROFILM
BILL OF MATL
DWG LIST
SUPSDS
SUPSD BY
SHEET NO. of SHEETS
C-07-32
REV 2

PLOT DATE: $PLOTDATE PLOT TIME: $PLOTTIME
FILENAME: E2-C-XXX-0732.dwg
C:\Users\peter.hubbard\CAD\Topock\E2-C-XXX-0732.dwg, 11X17, 9/5/2014 4:21:29 PM
N1808

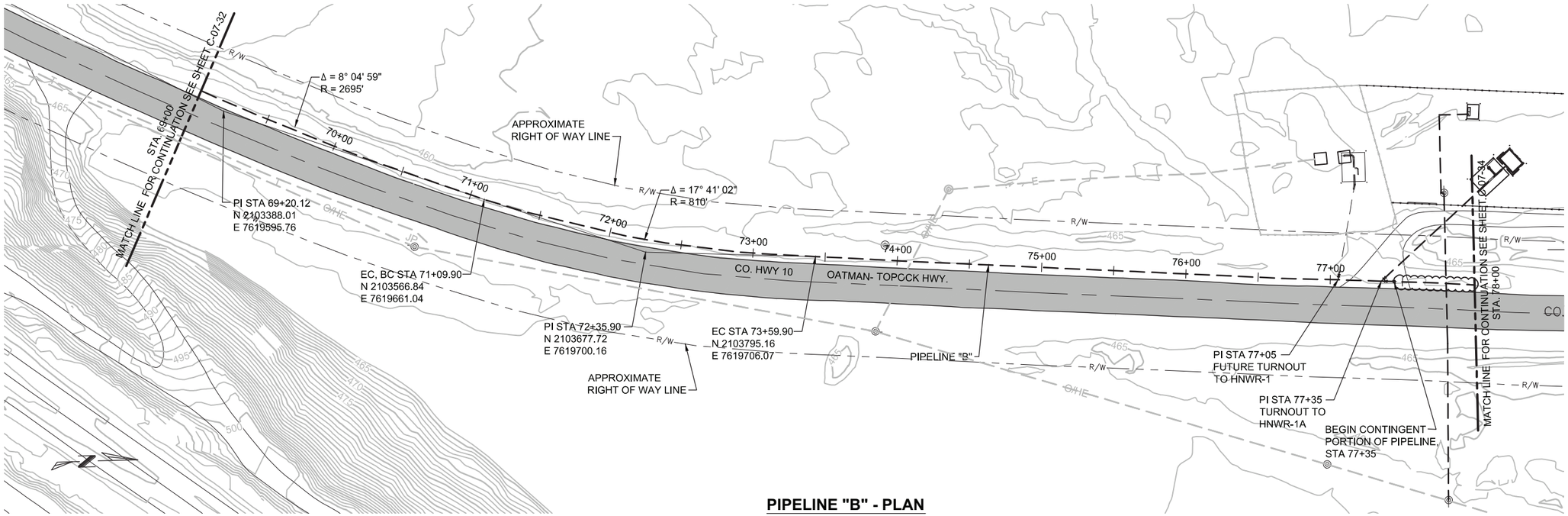

PIPELINE "B" - PLAN

(SCALE: 1" = 40' H)

NOTES:

1. THE NEW PIPELINE ALIGNMENT SHOWS CENTER OF TRENCH.
2. ASSUMED DEPTH AND APPROXIMATE LOCATION ARE SHOWN. LOCATE BY POTHOLING BEFORE STARTING CONSTRUCTION. COORDINATE WITH PG&E TO RELOCATE INTERFERING UTILITIES AS NECESSARY TO ACCOMMODATE PIPELINE B.
3. PRESERVE AND PROTECT EXISTING STRUCTURE, TYP.
4. PROVIDE TRAFFIC CONTROL WHEN WORKING IN/NEAR ROADWAYS. COMPLY WITH OWNER'S ENCROACHMENT PERMIT WHEN WORKING IN COUNTY HIGHWAY 10.

0 40 80 120
HORZ: SCALE: 1"=40'

0 10 20 30
VERT: SCALE: 1"=10'

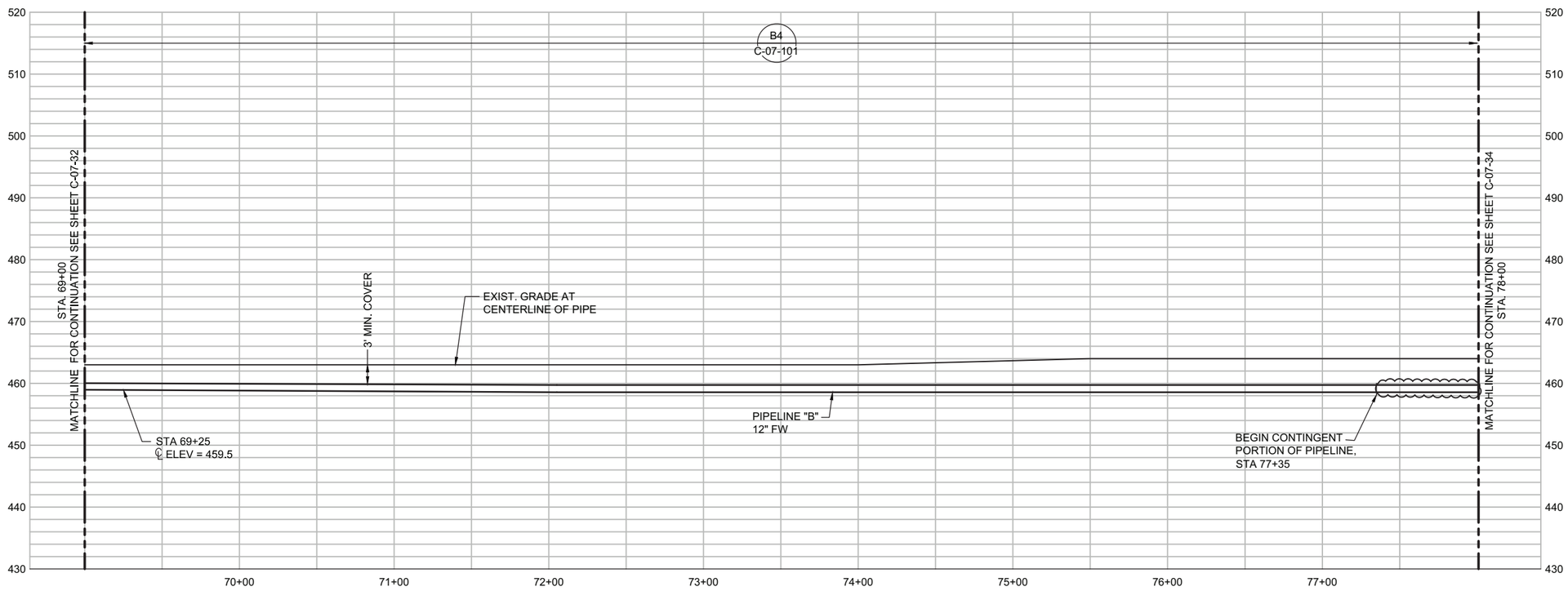

PIPELINE "B" - PROFILE

(SCALE: 1" = 40' H; 1" = 10' V)

CONTINGENT

NOTE:

THE EQUIPMENT AND FACILITY SHOWN CLOUDED IS PART OF A CONTINGENT SYSTEM AND MAY BE CONSTRUCTED IN THE FUTURE.

DRAFT
NOT FOR
CONSTRUCTION

E2 Consulting Engineers, Inc.
1900 Powell Street, Ste. 250
Emeryville, CA 94608
(510) 652-1164

CH2MHILL.

NO.	DATE	DESCRIPTION	GM/SPEC	DWN	CHKD	SUPV	APVD BY
2	9/8/14	PRE-FINAL (90%) DESIGN		PH	VMB	VMB	VMB
1	4/5/13	INTERMEDIATE (60%) DESIGN		PC	VMB	VMB	VMB
0	11/18/11	PRELIMINARY (30%) DESIGN		PC	VMB	VMB	VMB

REVISIONS

APPROVED BY

SO	
SUPV	VMB
DSGN	PT
DWN	PH
CHKD	VMB
OK	VMB
DATE	09/08/14
SCALES	1" = 40'

TOPOCK GROUNDWATER REMEDIATION PROJECT
PLAN AND PROFILE
PIPELINE "B"
STA 69+00 TO STA 78+00
GAS TRANSMISSION & DISTRIBUTION
PACIFIC GAS AND ELECTRIC COMPANY
SAN FRANCISCO, CALIFORNIA

MICROFILM
BILL OF MATL
DWG LIST
SUPSDS
SUPSD BY
SHEET NO. of SHEETS
C-07-33
REV 2

FILENAME: E2-C-XXX-0733.dwg
PLOT DATE: $PLOTDATE PLOT TIME: $PLOTTIME
C:\Users\peter.hubbard\CAD\Topock\E2-C-XXX-0733.dwg, 11X17, 9/5/2014 4:22:08 PM
N18DB

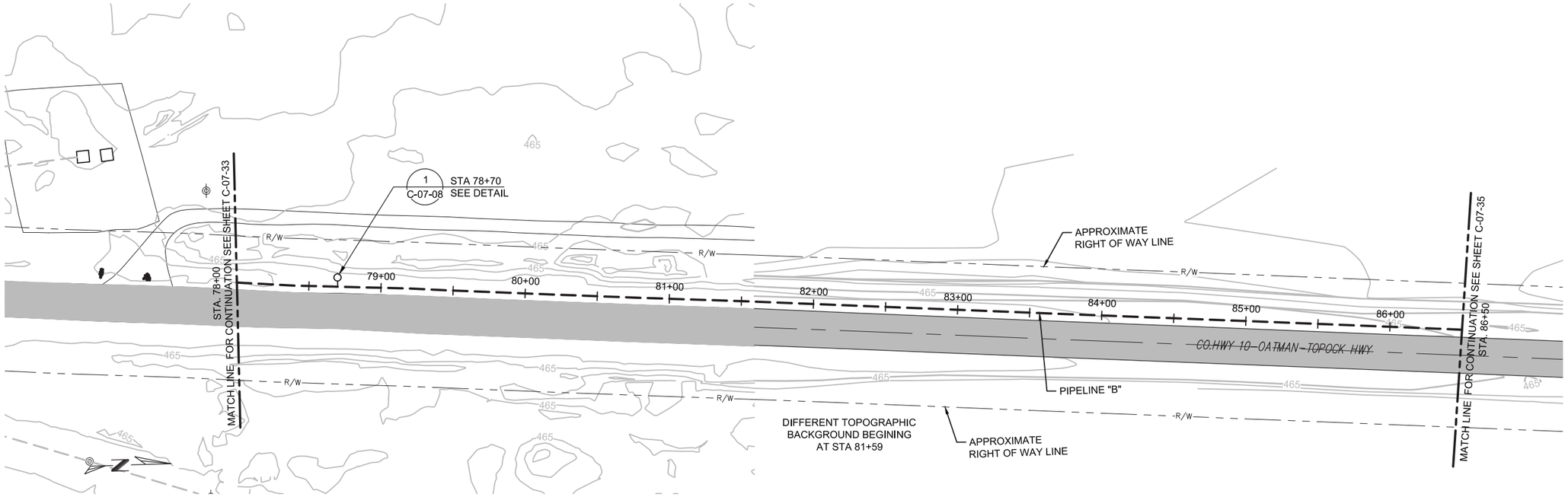

PIPELINE "B" - PLAN

(SCALE: 1" = 40' H)

NOTES:

1. THE NEW PIPELINE ALIGNMENT SHOWS CENTER OF TRENCH.
2. ASSUMED DEPTH AND APPROXIMATE LOCATION ARE SHOWN. LOCATE BY POTHOLING BEFORE STARTING CONSTRUCTION. COORDINATE WITH PG&E TO RELOCATE INTERFERING UTILITIES AS NECESSARY TO ACCOMMODATE PIPELINE B.
3. PRESERVE AND PROTECT EXISTING STRUCTURE, TYP.
4. PROVIDE TRAFFIC CONTROL WHEN WORKING IN/NEAR ROADWAYS. COMPLY WITH OWNER'S ENCROACHMENT PERMIT WHEN WORKING IN COUNTY HIGHWAY 10.

0 40 80 120
HORZ: SCALE: 1"=40'

0 10 20 30
VERT: SCALE: 1"=10'

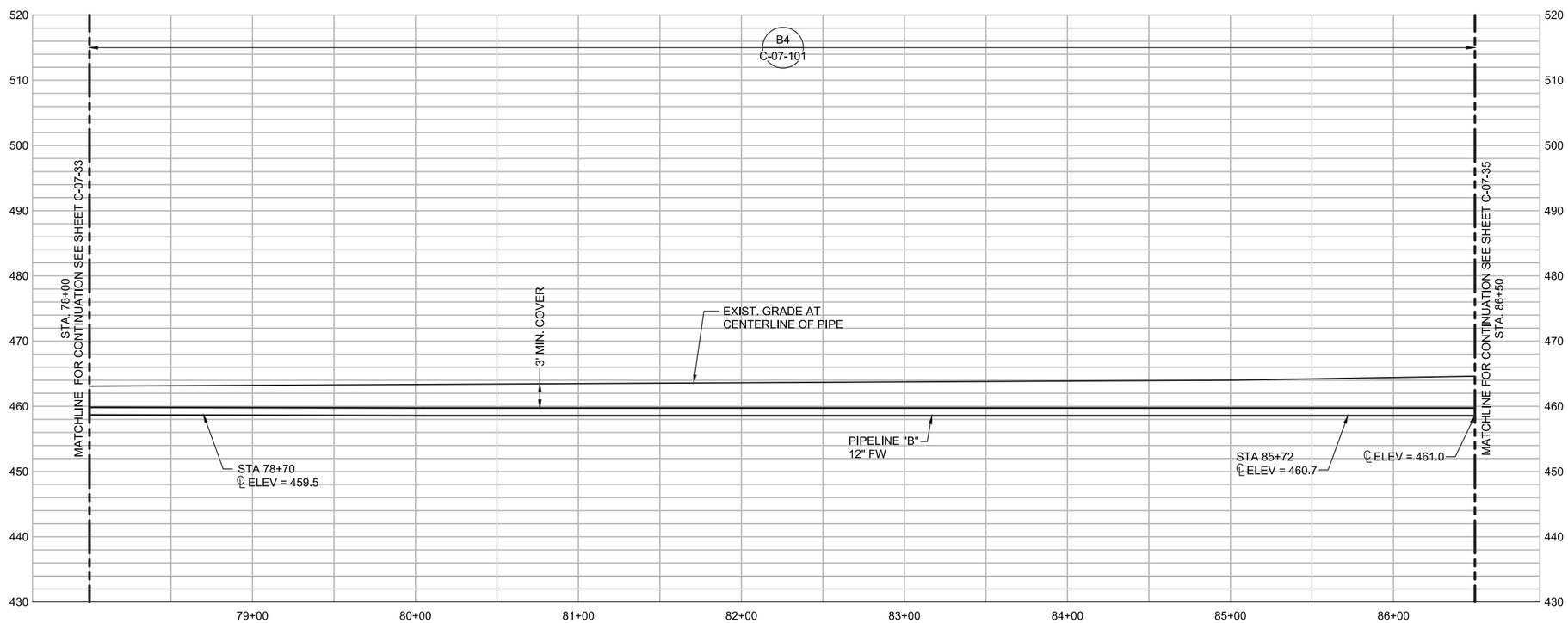

PIPELINE "B" - PROFILE

(SCALE: 1" = 40' H; 1" = 10' V)

CONTINGENT

NOTE:

THE EQUIPMENT AND FACILITY SHOWN IS PART OF A CONTINGENT SYSTEM AND MAY BE CONSTRUCTED IN THE FUTURE.

DRAFT
NOT FOR
CONSTRUCTION

E2 Consulting Engineers, Inc.
1900 Powell Street, Ste. 250
Emeryville, CA 94608
(510) 652-1164

CH2MHILL.

NO.	DATE	DESCRIPTION	GM/SPEC	DWN	CHKD	SUPV	APVD BY
0	9/8/14	PRE-FINAL (90%) DESIGN		PH	VMB	VMB	VMB

REVISIONS

APPROVED BY		
	SO	
	SUPV	VMB
	DSGN	PT
	DWN	PH
	CHKD	VMB
	OK	VMB
	DATE	09/08/14
	SCALES	

TOPOCK GROUNDWATER REMEDIATION PROJECT
PLAN AND PROFILE
PIPELINE "B"
STA 78+00 TO STA 86+50
GAS TRANSMISSION & DISTRIBUTION
PACIFIC GAS AND ELECTRIC COMPANY
SAN FRANCISCO, CALIFORNIA

MICROFILM
BILL OF MATL
DWG LIST
SUPSDS
SUPSD BY
SHEET NO. of SHEETS
C-07-34
REV 0

FILENAME: E2-C-XXX-0734.dwg
PLOT DATE: $PLOTDATE PLOT TIME: $PLOTTIME
C:\Users\peter.hubbard\CAD\Topock\E2-C-XXX-0734.dwg, 22x34, 9/5/2014 4:22:35 PM
N1808

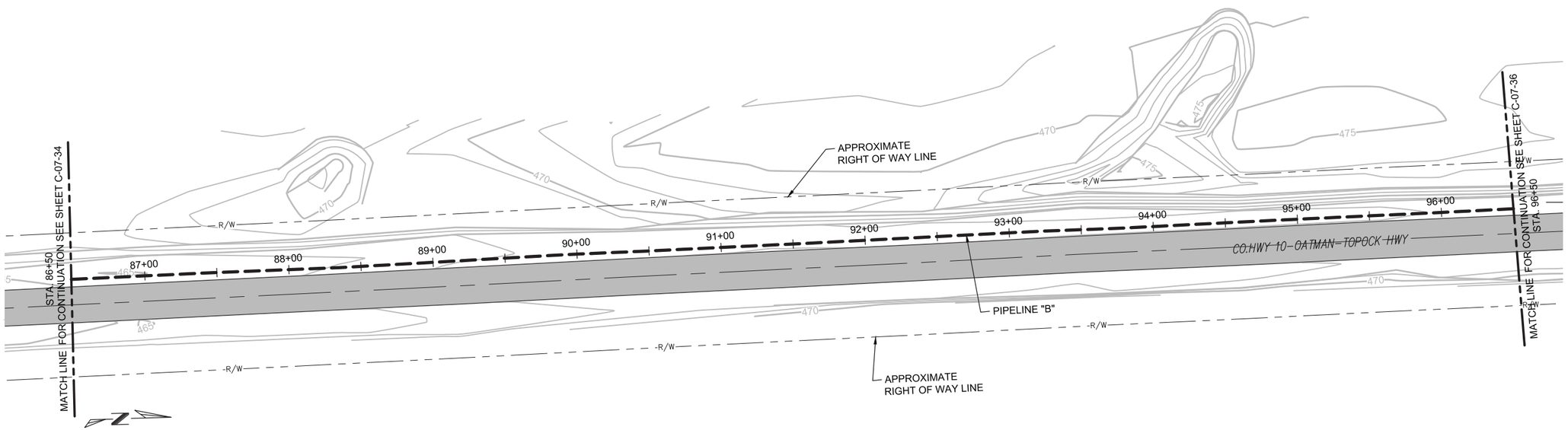

PIPELINE "B" - PLAN

(SCALE: 1" = 40' H)

NOTES:

1. THE NEW PIPELINE ALIGNMENT SHOWS CENTER OF TRENCH.
2. ASSUMED DEPTH AND APPROXIMATE LOCATION ARE SHOWN. LOCATE BY POTHOLING BEFORE STARTING CONSTRUCTION. COORDINATE WITH PG&E TO RELOCATE INTERFERING UTILITIES AS NECESSARY TO ACCOMMODATE PIPELINE B.
3. PRESERVE AND PROTECT EXISTING STRUCTURE, TYP.
4. PROVIDE TRAFFIC CONTROL WHEN WORKING IN/NEAR ROADWAYS. COMPLY WITH OWNER'S ENCROACHMENT PERMIT WHEN WORKING IN COUNTY HIGHWAY 10.

0 40 80 120
HORZ: SCALE: 1"=40'

0 10 20 30
VERT: SCALE: 1"=10'

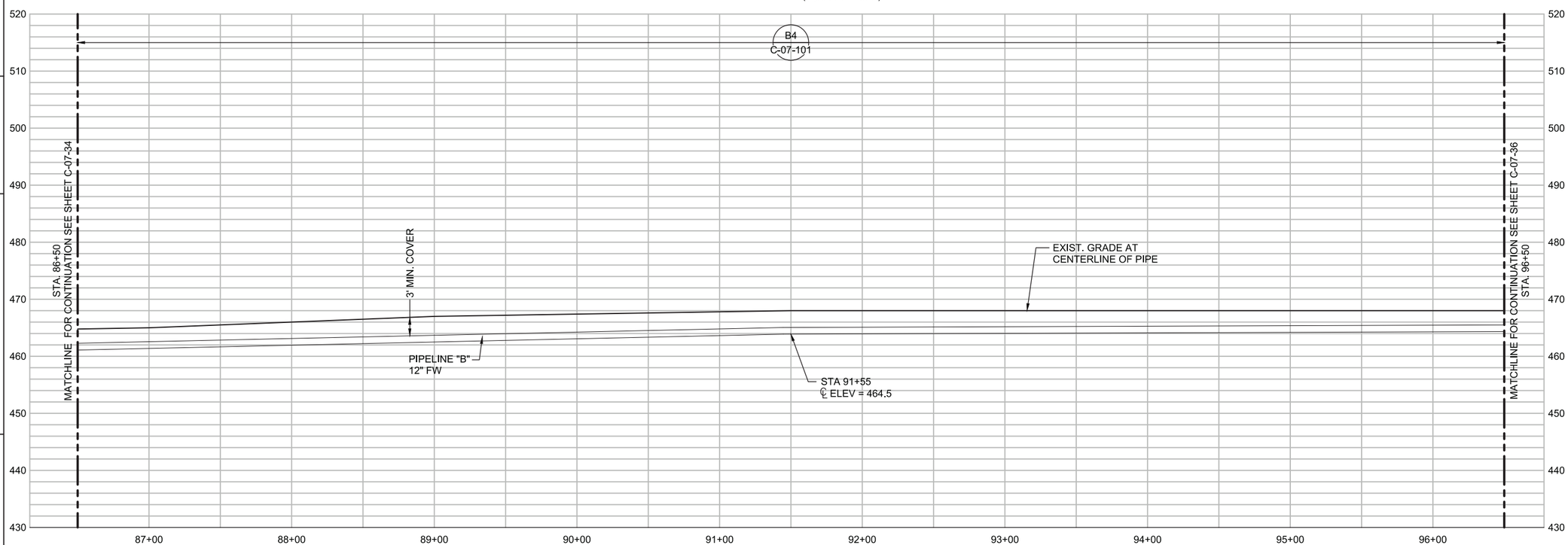

PIPELINE "B" - PROFILE

(SCALE: 1" = 40' H; 1" = 10' V)

CONTINGENT

NOTE:

THE EQUIPMENT AND FACILITY SHOWN IS PART OF A CONTINGENT SYSTEM AND MAY BE CONSTRUCTED IN THE FUTURE.

DRAFT
NOT FOR
CONSTRUCTION

E2 Consulting Engineers, Inc.
1900 Powell Street, Ste. 250
Emeryville, CA 94608
(510) 652-1164

CH2MHILL.

NO.	DATE	DESCRIPTION	GM/SPEC	DWN	CHKD	SUPV	APVD BY
0	9/8/14	PRE-FINAL (90%) DESIGN		PH	VMB	VMB	VMB

REVISIONS

APPROVED BY
SO
SUPV VMB
DSGN PT
DWN PH
CHKD VMB
OK VMB
DATE 09/08/14
SCALES

TOPOCK GROUNDWATER REMEDIATION PROJECT
PLAN AND PROFILE
PIPELINE "B"
STA 86+50 TO STA 96+50
GAS TRANSMISSION & DISTRIBUTION
PACIFIC GAS AND ELECTRIC COMPANY
SAN FRANCISCO, CALIFORNIA

MICROFILM
BILL OF MATL
DWG LIST
SUPSDS
SUPSD BY
SHEET NO. of SHEETS
C-07-35
REV 0

FILENAME: E2-C-XXX-0735.dwg
PLOT DATE: $PLOTDATE PLOT TIME: $PLOTTIME
C:\Users\peter.hubbard\CAD\Topock\E2-C-XXX-0735.dwg, 22X34, 9/5/2014 4:23:11 PM
N1808

NOTES:

1. THE NEW PIPELINE ALIGNMENT SHOWS CENTER OF TRENCH.
2. ASSUMED DEPTH AND APPROXIMATE LOCATION ARE SHOWN. LOCATE BY POTHOLING BEFORE STARTING CONSTRUCTION. COORDINATE WITH PG&E TO RELOCATE INTERFERING UTILITIES AS NECESSARY TO ACCOMMODATE PIPELINE B.
3. PRESERVE AND PROTECT EXISTING STRUCTURE, TYP.
4. PROVIDE TRAFFIC CONTROL WHEN WORKING IN/NEAR ROADWAYS. COMPLY WITH OWNER'S ENCROACHMENT PERMIT WHEN WORKING IN COUNTY HIGHWAY 10.

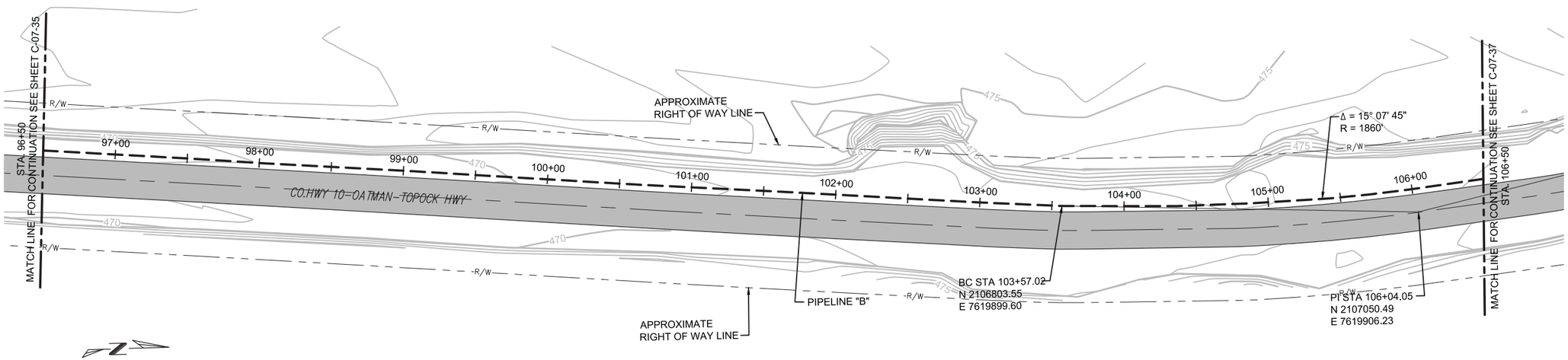

PIPELINE "B" - PLAN

(SCALE: 1" = 40' H)

0 40 80 120
HORZ: SCALE: 1"=40'

0 10 20 30
VERT: SCALE: 1"=10'

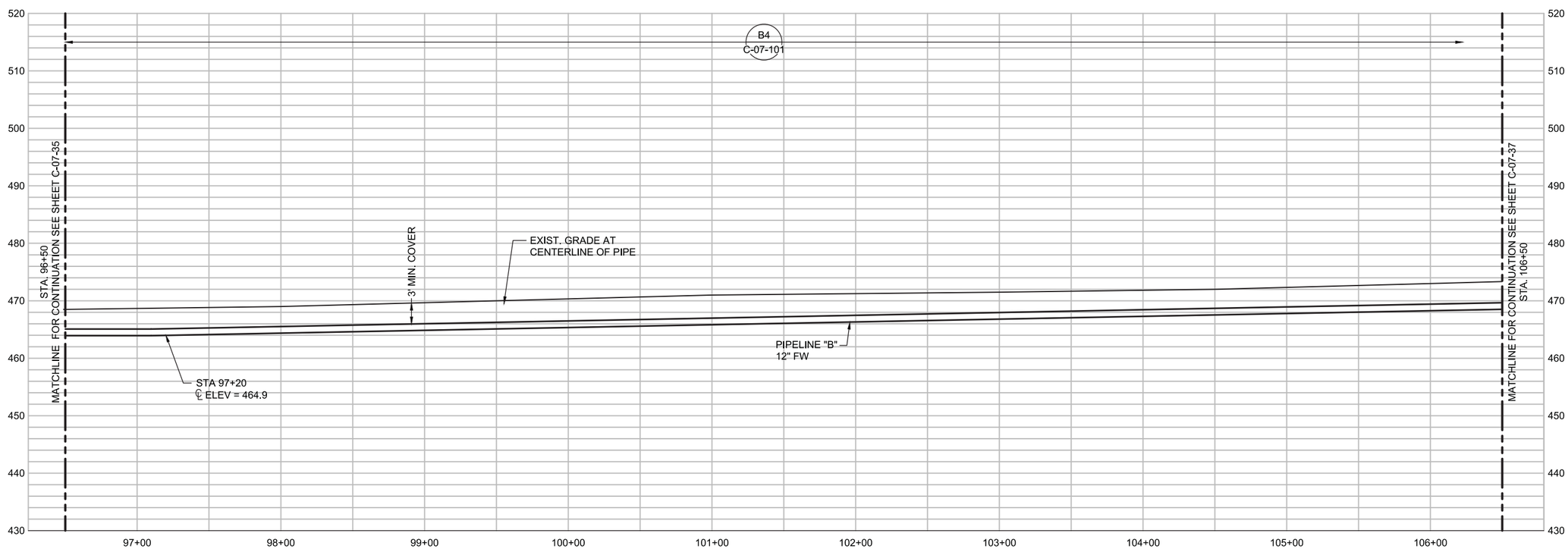

PIPELINE "B" - PROFILE

(SCALE: 1" = 40' H; 1" = 10' V)

CONTINGENT

NOTE:

THE EQUIPMENT AND FACILITY SHOWN IS PART OF A CONTINGENT SYSTEM AND MAY BE CONSTRUCTED IN THE FUTURE.

DRAFT
NOT FOR
CONSTRUCTION

E2 Consulting Engineers, Inc.
1900 Powell Street, Ste. 250
Emeryville, CA 94608
(510) 652-1164

CH2MHILL.

NO.	DATE	DESCRIPTION	GM/SPEC	DWN	CHKD	SUPV	APVD BY
0	9/8/14	PRE-FINAL (90%) DESIGN		PH	VMB	VMB	VMB

REVISIONS

APPROVED BY
SO
SUPV VMB
DSGN PT
DWN PH
CHKD VMB
OK VMB
DATE 09/08/14
SCALES

TOPOCK GROUNDWATER REMEDIATION PROJECT
PLAN AND PROFILE
PIPELINE "B"
STA 96+50 TO STA 106+50
GAS TRANSMISSION & DISTRIBUTION
PACIFIC GAS AND ELECTRIC COMPANY
SAN FRANCISCO, CALIFORNIA

MICROFILM
BILL OF MATL
DWG LIST
SUPSDS
SUPSD BY
SHEET NO. of SHEETS
C-07-36
REV 0

FILENAME: E2-C-XXX-0736.dwg
PLOT DATE: $PLOTDATE PLOT TIME: $PLOTTIME
C:\Users\peter.hubbard\CAD\Topock\E2-C-XXX-0736.dwg 22X34 9/8/2014 12:08:54 PM
N1806

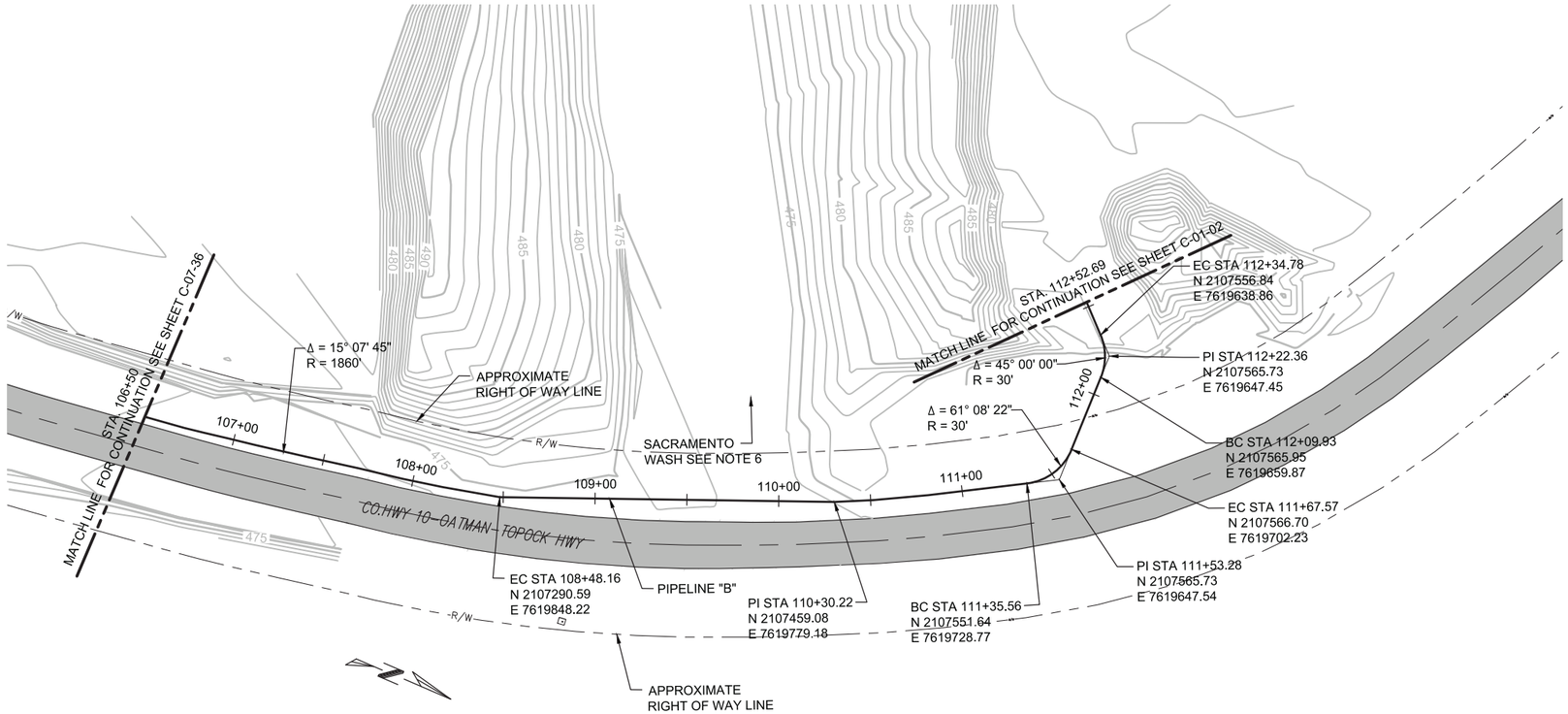

PIPELINE "B" - PLAN

(SCALE: 1" = 40' H)

NOTES:

1. THE NEW PIPELINE ALIGNMENT SHOWS CENTER OF TRENCH.
2. ASSUMED DEPTH AND APPROXIMATE LOCATION ARE SHOWN. LOCATE BY POTHOLING BEFORE STARTING CONSTRUCTION. COORDINATE WITH PG&E TO RELOCATE INTERFERING UTILITIES AS NECESSARY TO ACCOMMODATE PIPELINE B.
3. PRESERVE AND PROTECT EXISTING STRUCTURE, TYP.
4. PROVIDE TRAFFIC CONTROL WHEN WORKING IN/NEAR ROADWAYS. COMPLY WITH OWNER'S ENCROACHMENT PERMIT WHEN WORKING IN COUNTY HIGHWAY 10.
5. SURVEY TOPOGRAPHY OF SACRAMENTO WASH AND SURROUNDING AREA. SUBMIT SURVEY MAP AND CAD FILE FOR OWNER REVIEW. DO NOT START CONSTRUCTION WITHOUT OWNER APPROVAL.

0 40 80 120
HORZ: SCALE: 1"=40'

0 10 20 30
VERT: SCALE: 1"=10'

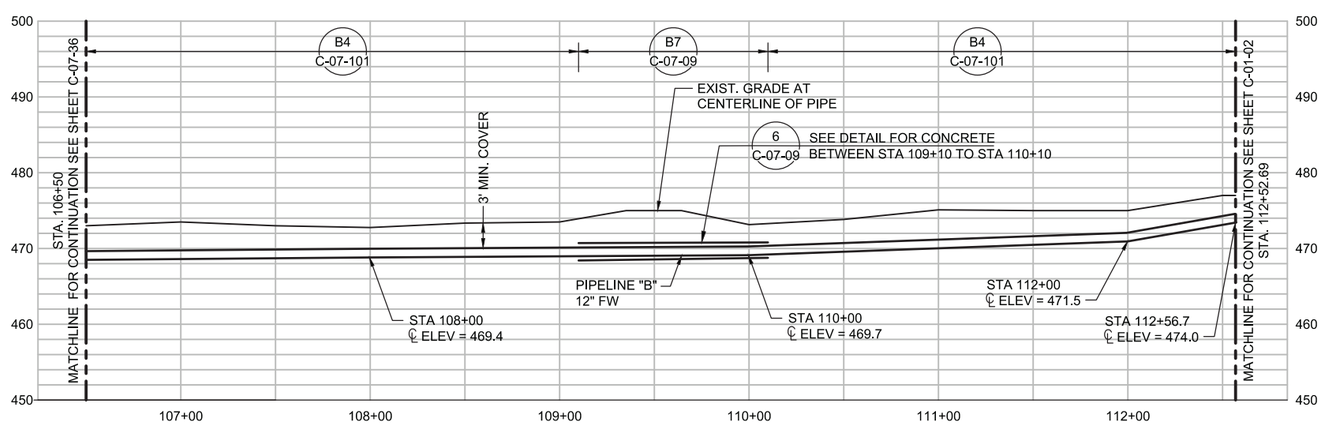

PIPELINE "B" - PROFILE

(SCALE: 1" = 40' H; 1" = 10' V)

CONTINGENT

NOTE:

THE EQUIPMENT AND FACILITY SHOWN IS PART OF A CONTINGENT SYSTEM AND MAY BE CONSTRUCTED IN THE FUTURE.

DRAFT NOT FOR CONSTRUCTION

E2 Consulting Engineers, Inc.
1900 Powell Street, Ste. 250
Emeryville, CA 94608
(510) 652-1164

CH2MHILL.

NO.	DATE	DESCRIPTION	GM/SPEC	DWN	CHKD	SUPV	APVD BY
0	9/8/14	PRE-FINAL (90%) DESIGN		PH	VMB	VMB	VMB

REVISIONS

APPROVED BY: SO; SUPV VMB; DSGN PT; DWN PH; CHKD VMB; OK VMB; DATE 09/08/14; SCALES

TOPOCK GROUNDWATER REMEDIATION PROJECT
PLAN AND PROFILE
PIPELINE "B"
STA 106+50 TO STA 112+52.69
GAS TRANSMISSION & DISTRIBUTION
PACIFIC GAS AND ELECTRIC COMPANY
SAN FRANCISCO, CALIFORNIA

MICROFILM
BILL OF MATL
DWG LIST
SUPSDS
SUPSD BY
SHEET NO. C-07-37 of SHEETS
REV 0

FILENAME: E2-C-XXX-0737.dwg
PLOT DATE: $PLOTDATE PLOT TIME: $PLOTTIME
C:\Users\peter.hubbard\CAD\Topock\E2-C-XXX-0737.dwg, 22/34, 9/5/2014 4:24:14 PM
N1808

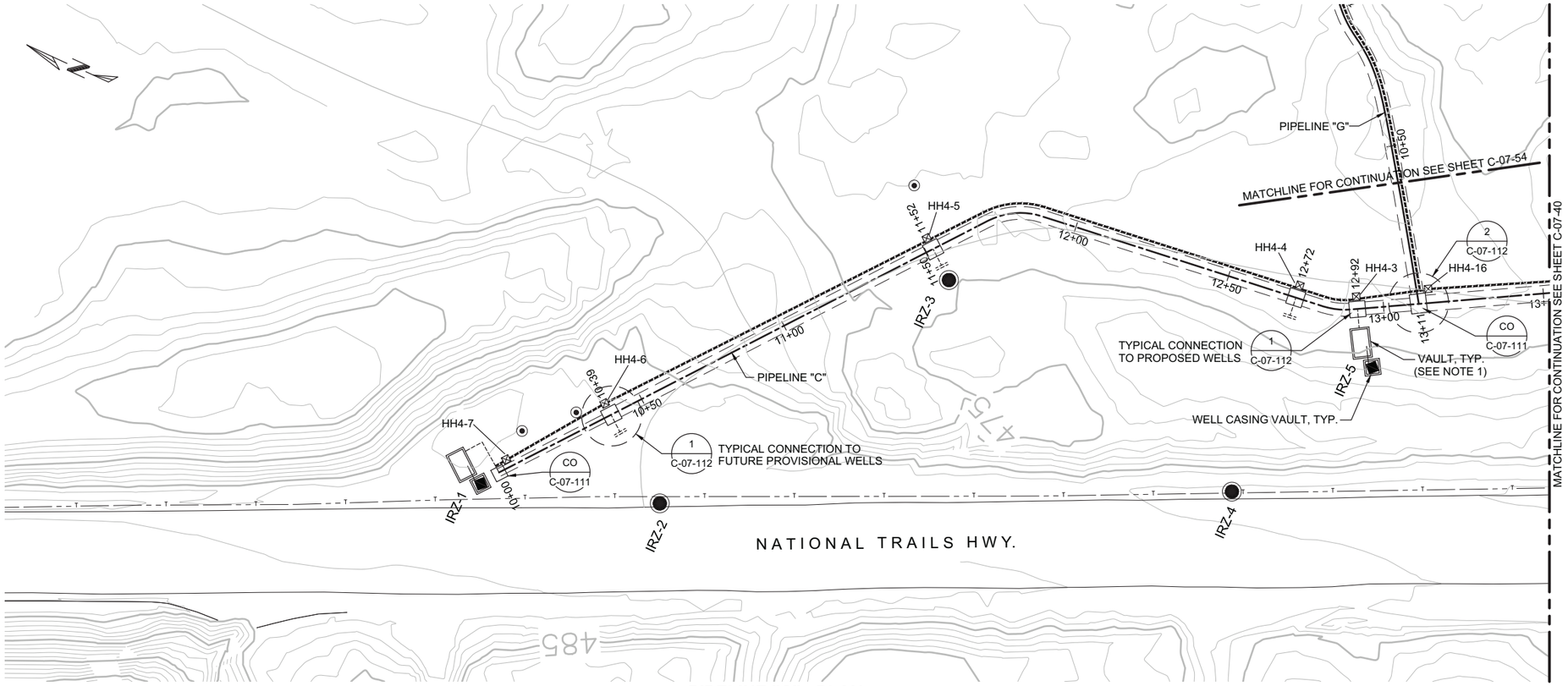

PIPELINE "C" - PLAN

(SCALE: 1" = 20')

NOTES

1. VAULT DETAILS SHOWN ON SHEETS M-X-X AND S-X-X.
2. SEE CONDUIT AND CABLE SCHEDULES AND SINGLE LINE DIAGRAMS ON SHEETS E-00-12 THRU E-00-20.
3. CLEANOUT LOCATIONS PROVIDE CLEANOUT PIPING FOR ALL INJECTION, EXTRACTION, BACKWASH, AND REMEDY-PRODUCED WATER LINES AT INDICATED LOCATIONS (SEE DETAIL C-07-111).

0 20 40 60
HORIZ: SCALE: 1"=20'

0 10 20 30
VERT: SCALE: 1"=10'

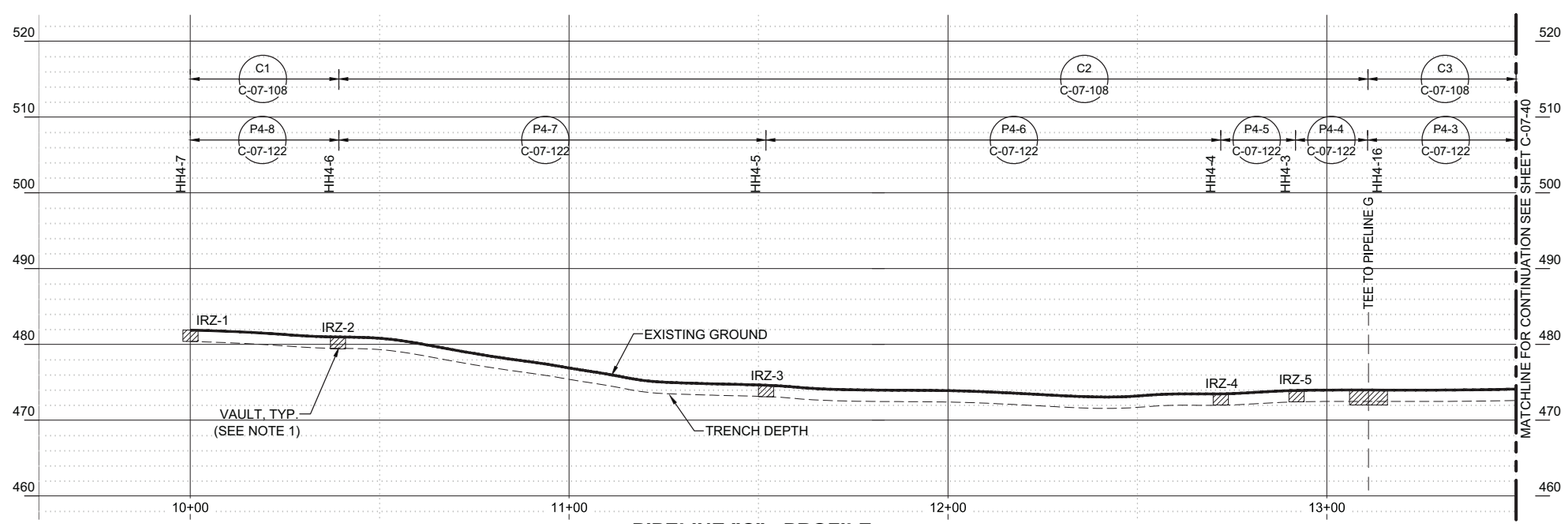

PIPELINE "C" - PROFILE

(SCALE: 1" = 20' H; 1" = 10' V)

- DRAFT -
NOT FOR
CONSTRUCTION

ETIC ENGINEERING

ARCADIS

NO.	DATE	DESCRIPTION	GM/SPEC	DWN	CHKD	SUPV	APVD BY
1	09/08/14	PRE-FINAL (90%) DESIGN		AJW	BAS	JPB	JEF
0	04/05/13	INTERMEDIATE (60%) DESIGN		AJW	KLD	JPB	JEF

REVISIONS

APPROVED BY: JEF

SO	
SUPV	JPB
DSGN	BAS
DWN	AJW
CHKD	JPB
OK	JEF
DATE	09/08/14
SCALES	1" = 20'

TOPOCK GROUNDWATER REMEDIATION PROJECT

PIPELINE - PLAN AND PROFILE
PIPELINE "C1", "C2", & "C3"
STA 10+00 TO STA 13+50

GAS TRANSMISSION & DISTRIBUTION
PACIFIC GAS AND ELECTRIC COMPANY
SAN FRANCISCO, CALIFORNIA

MICROFILM
BILL OF MATL
DWG LIST
SUPSDS
SUPSD BY
SHEET NO. of SHEETS
C-07-39
REV 1

08/27/2014, 14:53, G:\Graphics\ART\TOPOCK-01\Post 90%\C-07-39\p 59_Plan&Profile.dwg, Tab: C-07-39

N1808

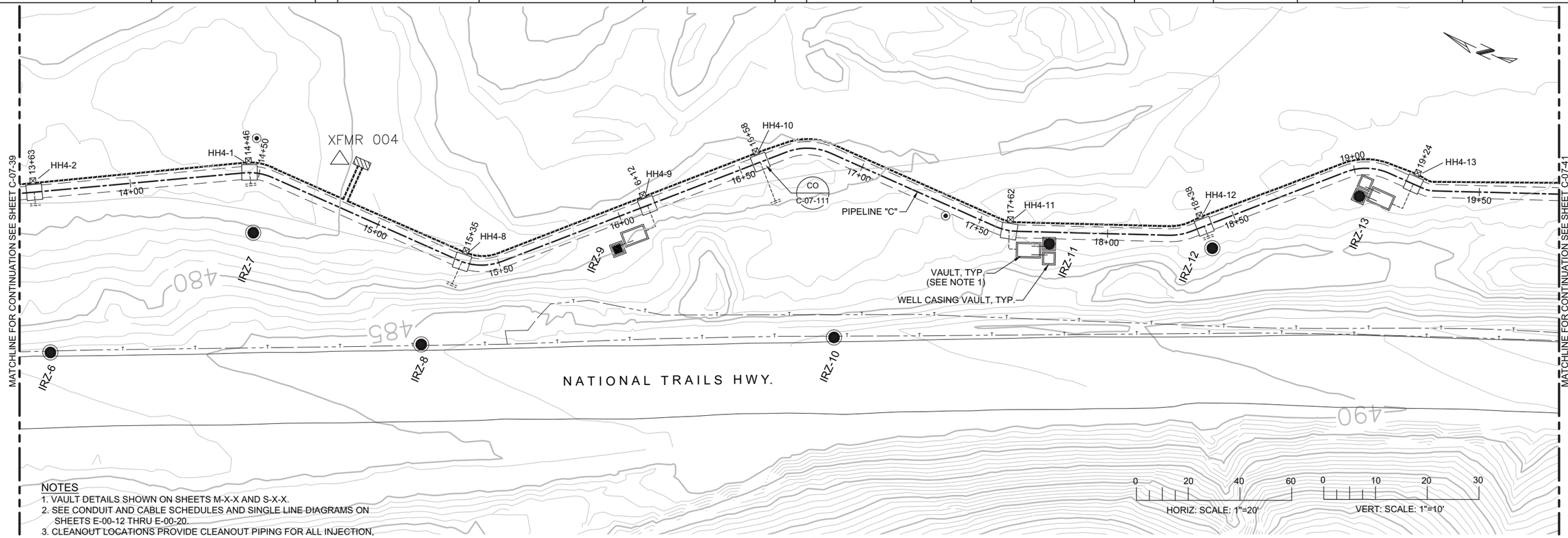

NOTES
1. VAULT DETAILS SHOWN ON SHEETS M-X-X AND S-X-X.
2. SEE CONDUIT AND CABLE SCHEDULES AND SINGLE LINE DIAGRAMS ON SHEETS E-00-12 THRU E-00-20.
3. CLEANOUT LOCATIONS PROVIDE CLEANOUT PIPING FOR ALL INJECTION, EXTRACTION, BACKWASH, AND REMEDY-PRODUCED WATER LINES AT INDICATED LOCATIONS (SEE DETAIL C-07-111).

PIPELINE "C" - PLAN

(SCALE: 1" = 20')

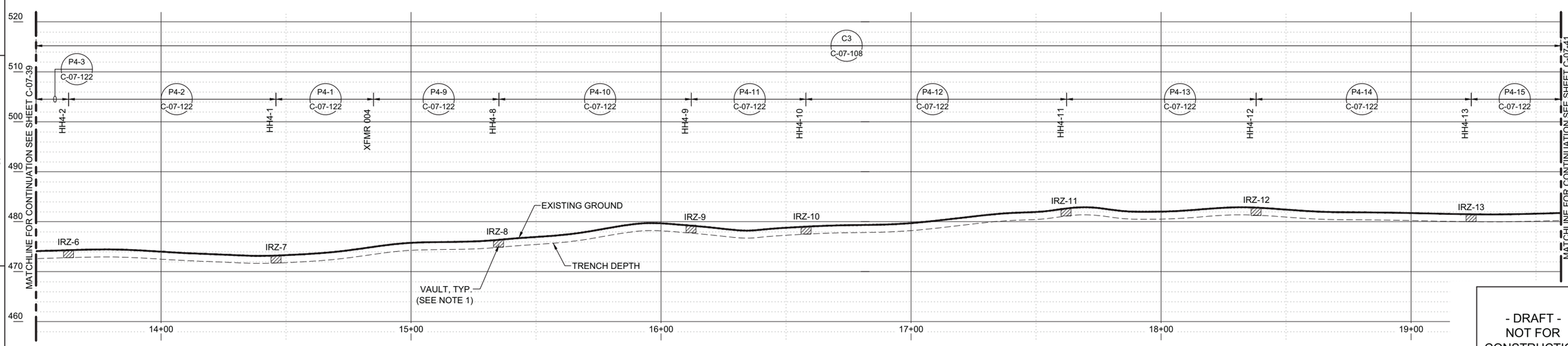

PIPELINE "C" - PROFILE

(SCALE: 1" = 20' H; 1" = 10' V)

- DRAFT -
NOT FOR
CONSTRUCTION

ETIC ENGINEERING

ARCADIS

NO.	DATE	DESCRIPTION	GM/SPEC	DWN	CHKD	SUPV	APVD BY
1	09/08/14	PRE-FINAL (90%) DESIGN		AJW	BAS	JPB	JEF
0	04/05/13	INTERMEDIATE (60%) DESIGN		AJW	KLD	JPB	JEF

REVISIONS

APPROVED BY: JEF

SO	
SUPV	JPB
DSGN	BAS
DWN	AJW
CHKD	JPB
OK	JEF
DATE	09/08/14
SCALES	1" = 20'

TOPOCK GROUNDWATER REMEDIATION PROJECT

PIPELINE - PLAN AND PROFILE
PIPELINE "C2"
STA 13+50 TO STA 19+60

GAS TRANSMISSION & DISTRIBUTION
PACIFIC GAS AND ELECTRIC COMPANY
SAN FRANCISCO, CALIFORNIA

MICROFILM
BILL OF MATL
DWG LIST
SUPSDS
SUPSD BY
SHEET NO. of SHEETS
C-07-40
REV 1

N1808

08/27/2014, 14:53, G:\Graphics\AR\TOPOCK-01\Post 90%\C-07-39 to 59_Plan&Profile.dwg, Tab: 40

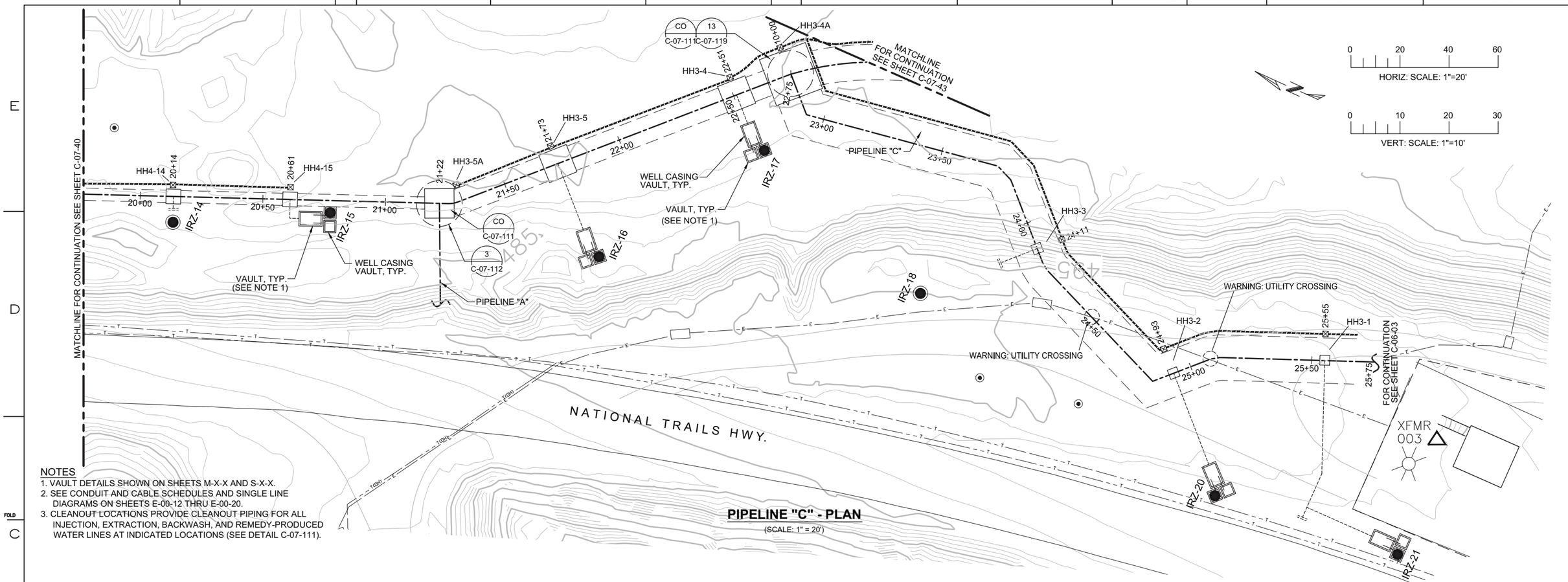

NOTES
1. VAULT DETAILS SHOWN ON SHEETS M-X-X AND S-X-X.
2. SEE CONDUIT AND CABLE SCHEDULES AND SINGLE LINE DIAGRAMS ON SHEETS E-00-12 THRU E-00-20.
3. CLEANOUT LOCATIONS PROVIDE CLEANOUT PIPING FOR ALL INJECTION, EXTRACTION, BACKWASH, AND REMEDY-PRODUCED WATER LINES AT INDICATED LOCATIONS (SEE DETAIL C-07-111).

PIPELINE "C" - PLAN
(SCALE: 1" = 20')

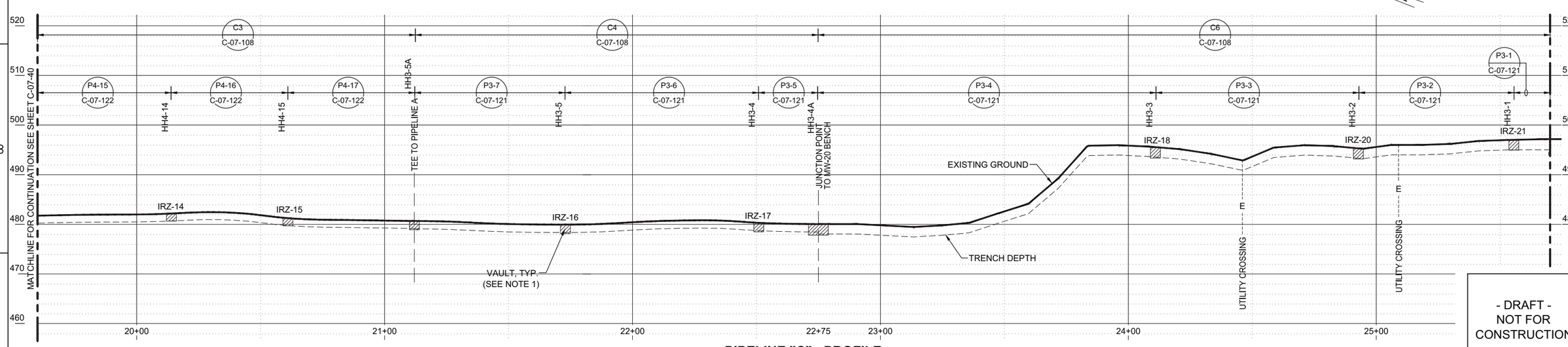

PIPELINE "C" - PROFILE
(SCALE: 1" = 20' H; 1" = 10' V)

- DRAFT -
NOT FOR CONSTRUCTION

ETIC ENGINEERING
ARCADIS

NO.	DATE	DESCRIPTION	GM/SPEC	DWN	CHKD	SUPV	APVD BY
1	09/08/14	PRE-FINAL (90%) DESIGN		AJW	BAS	JPB	JEF
0	04/05/13	INTERMEDIATE (60%) DESIGN		AJW	KLD	JPB	JEF

REVISIONS

APPROVED BY: JEF

SO	
SUPV	JPB
DSGN	BAS
DWN	AJW
CHKD	JPB
OK	JEF
DATE	09/08/14
SCALES	1" = 20'

TOPOCK GROUNDWATER REMEDIATION PROJECT
PIPELINE - PLAN AND PROFILE
PIPELINE "C3", "C4", & "C6"
STA 19+60 TO STA 25+79
GAS TRANSMISSION & DISTRIBUTION
PACIFIC GAS AND ELECTRIC COMPANY
SAN FRANCISCO, CALIFORNIA

MICROFILM
BILL OF MATL
DWG LIST
SUPSDS
SUPSD BY
SHEET NO. of SHEETS
C-07-41
REV 1

N1B08

08/27/2014, 14:54, G:\Graphics\ARI\TOPOCK-01\Post 90%\C-07-39 to 59_Plan&Profile.dwg, Tab: 41

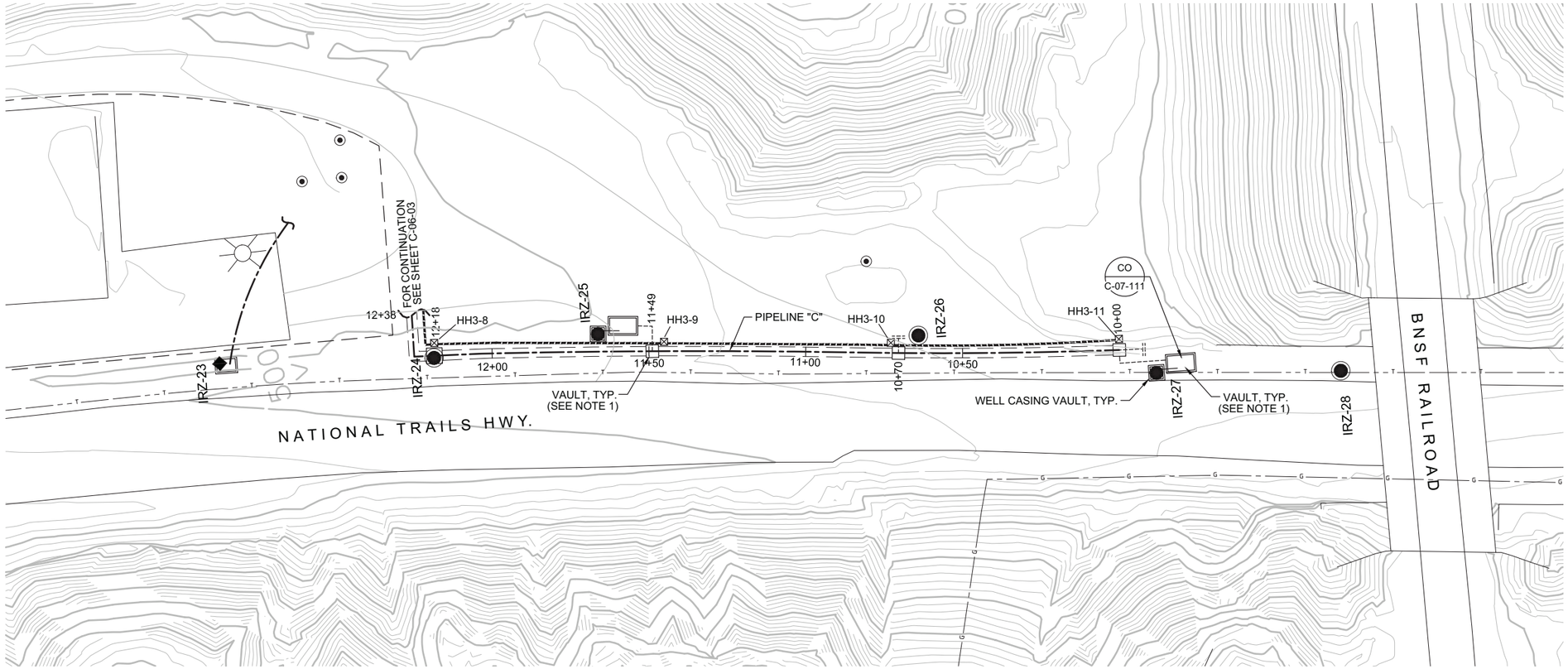

PIPELINE "C" - PLAN

(SCALE: 1" = 20')

NOTES

1. VAULT DETAILS SHOWN ON SHEETS M-X-X AND S-X-X.
2. SEE CONDUIT AND CABLE SCHEDULES AND SINGLE LINE DIAGRAMS ON SHEETS E-00-12 THRU E-00-20.
3. CLEANOUT LOCATIONS PROVIDE CLEANOUT PIPING FOR ALL INJECTION, EXTRACTION, BACKWASH, AND REMEDY-PRODUCED WATER LINES AT INDICATED LOCATIONS (SEE DETAIL C-07-111).

0 20 40 60
HORIZ: SCALE: 1"=20'

0 10 20 30
VERT: SCALE: 1"=10'

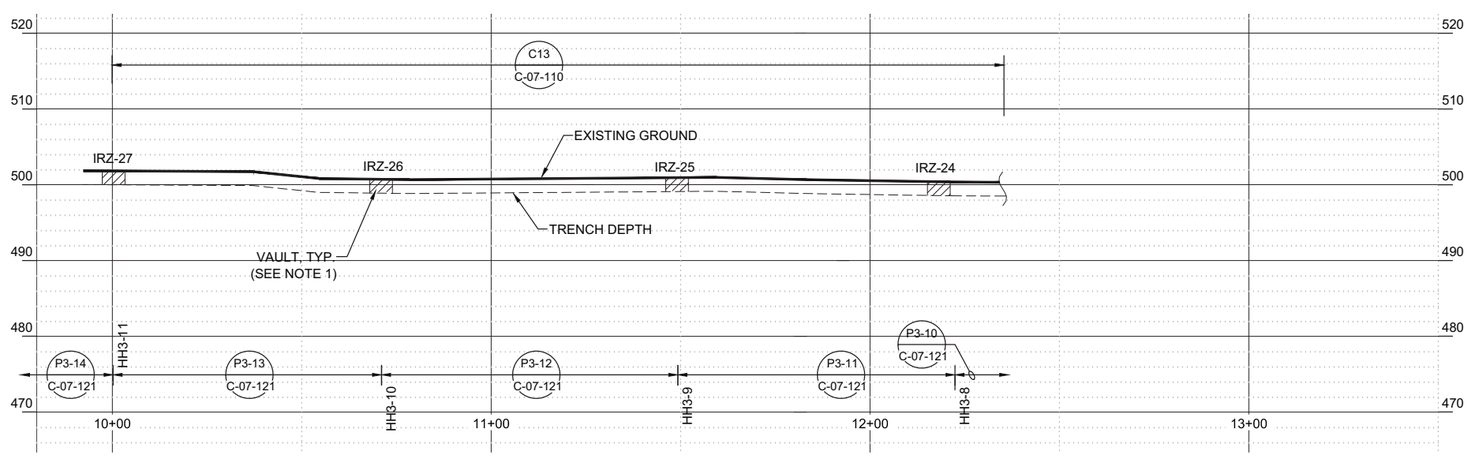

PIPELINE "C" - PROFILE

(SCALE: 1" = 20' H; 1" = 10' V)

- DRAFT -
NOT FOR
CONSTRUCTION

ETIC ENGINEERING

ARCADIS

NO.	DATE	DESCRIPTION	GM/SPEC	DWN	CHKD	SUPV	APVD BY
1	09/08/14	PRE-FINAL (90%) DESIGN		AJW	BAS	JPB	JEF
0	04/05/13	INTERMEDIATE (60%) DESIGN		AJW	KLD	JPB	JEF

REVISIONS

APPROVED BY: JEF

SO	
SUPV	JPB
DSGN	BAS
DWN	AJW
CHKD	JPB
OK	JEF
DATE	09/08/14
SCALES	1" = 20'

TOPOCK GROUNDWATER REMEDIATION PROJECT

PIPELINE - PLAN AND PROFILE
PIPELINE "C13"
STA 10+00 TO STA 12+38

GAS TRANSMISSION & DISTRIBUTION
PACIFIC GAS AND ELECTRIC COMPANY
SAN FRANCISCO, CALIFORNIA

MICROFILM
BILL OF MATL
DWG LIST
SUPSDS
SUPSD BY
SHEET NO. of SHEETS
C-07-42
REV 1

08/27/2014, 14:54, G:\Graphics\ARI\TOPOCK-01\Post 90%\C-07-39 to 59_Plan&Profile.dwg, Tab: 42

N1808

NOTES
1. VAULT DETAILS SHOWN ON SHEETS M-X-X AND S-X-X.
2. SEE CONDUIT AND CABLE SCHEDULES AND SINGLE LINE DIAGRAMS ON SHEETS E-00-12 THRU E-00-20.
3. CLEANOUT LOCATIONS PROVIDE CLEANOUT PIPING FOR ALL INJECTION, EXTRACTION, BACKWASH, AND REMEDY-PRODUCED WATER LINES AT INDICATED LOCATIONS (SEE DETAIL C-07-111).

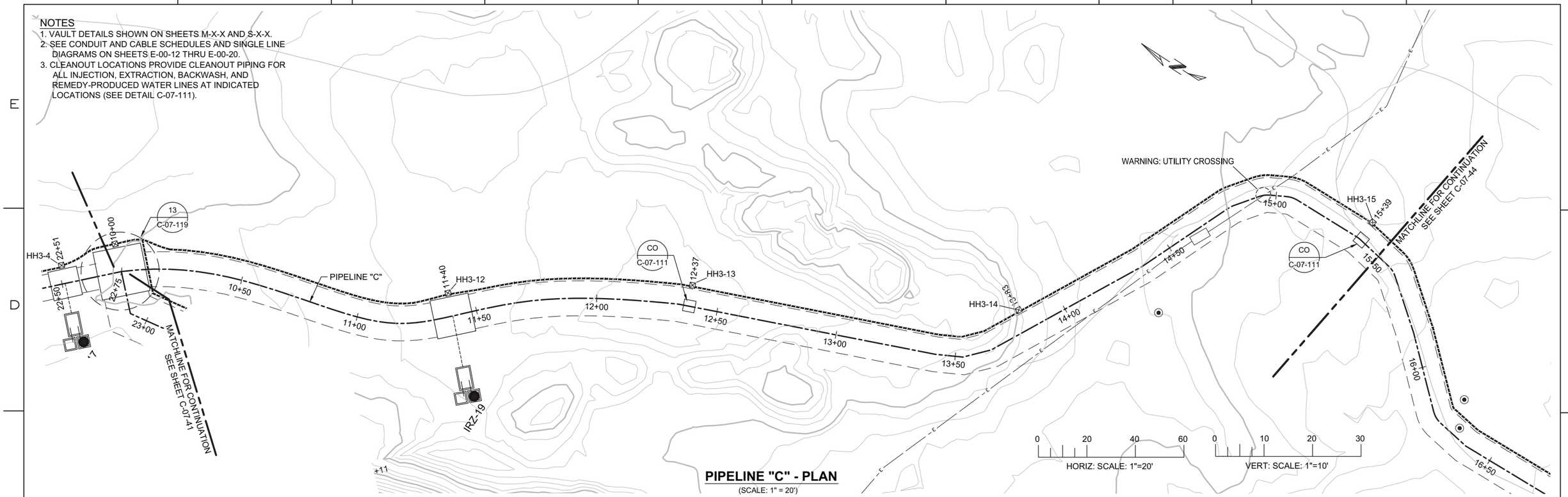

PIPELINE "C" - PLAN
(SCALE: 1" = 20')

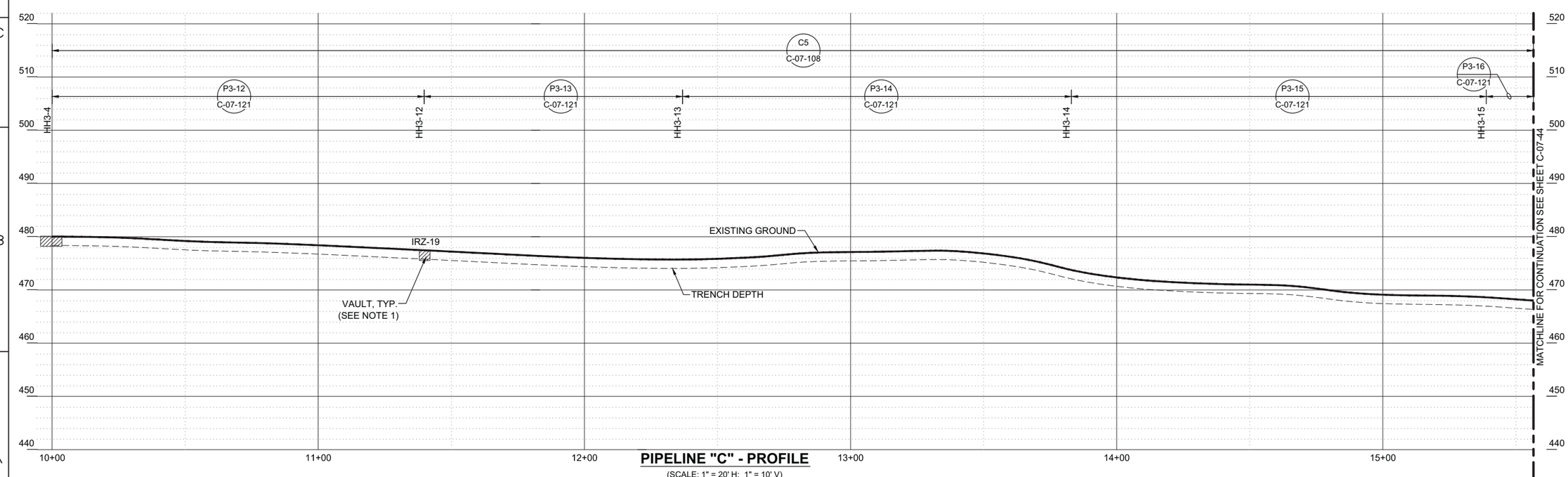

PIPELINE "C" - PROFILE
(SCALE: 1" = 20' H; 1" = 10' V)

- DRAFT -
NOT FOR
CONSTRUCTION

ETIC ENGINEERING

ARCADIS

NO.	DATE	DESCRIPTION	GM/SPEC	DWN	CHKD	SUPV	APVD BY
1	09/08/14	PRE-FINAL (90%) DESIGN		AJW	BAS	JPB	JEF
0	04/05/13	INTERMEDIATE (60%) DESIGN		AJW	KLD	JPB	JEF

REVISIONS

APPROVED BY	
JEF	SO
	SUPV JPB
	DSGN BAS
	DWN AJW
	CHKD JPB
	OK JEF
	DATE 09/08/14
	SCALES 1" = 20'

TOPOCK GROUNDWATER REMEDIATION PROJECT
PIPELINE - PLAN AND PROFILE
PIPELINE "C5"
STA 10+00 TO STA 15+50
GAS TRANSMISSION & DISTRIBUTION
PACIFIC GAS AND ELECTRIC COMPANY
SAN FRANCISCO, CALIFORNIA

MICROFILM
BILL OF MATL
DWG LIST
SUPSDS
SUPSD BY
SHEET NO. of SHEETS
C-07-43
REV 1

08/27/2014, 14:54, G:\Graphics\ART\TOPOCK-01\Post 90%\C-07-39\p 59_Plan&Profile.dwg, Tab: 43

N1B08

NOTES
1. VAULT DETAILS SHOWN ON SHEETS M-X-X AND S-X-X.
2. SEE CONDUIT AND CABLE SCHEDULES AND SINGLE LINE DIAGRAMS ON SHEETS E-00-12 THRU E-00-20.
3. CLEANOUT LOCATIONS PROVIDE CLEANOUT PIPING FOR ALL INJECTION, EXTRACTION, BACKWASH, AND REMEDY-PRODUCED WATER LINES AT INDICATED LOCATIONS (SEE DETAIL C-07-111).

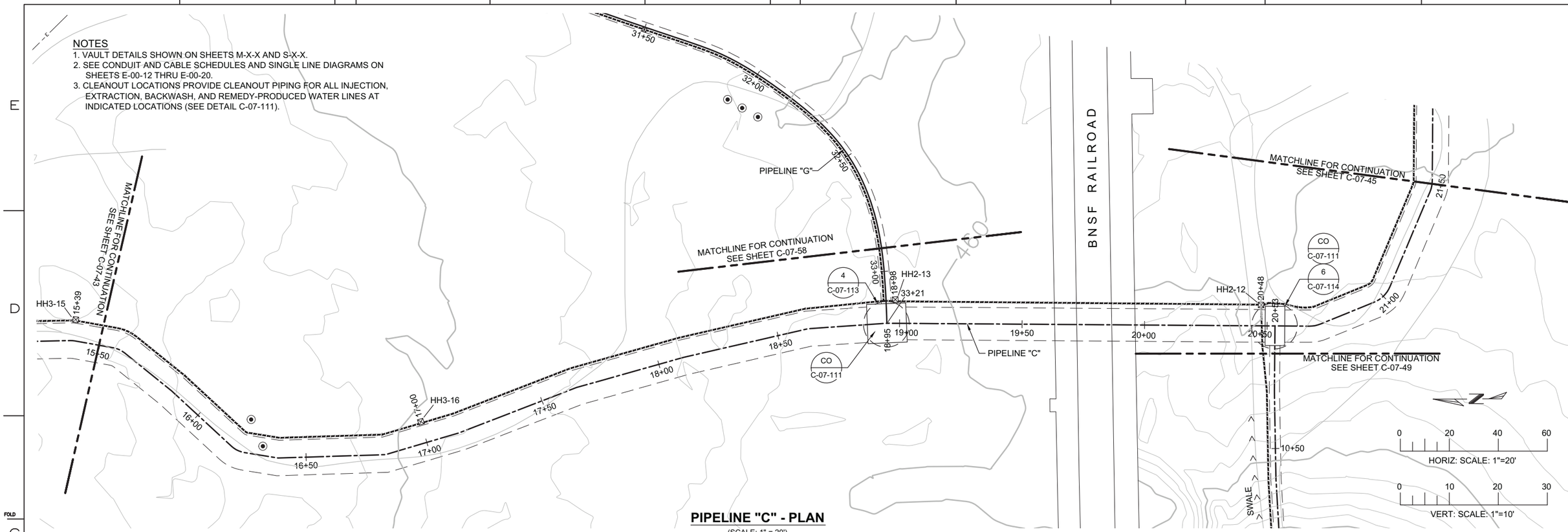

PIPELINE "C" - PLAN

(SCALE: 1" = 20')

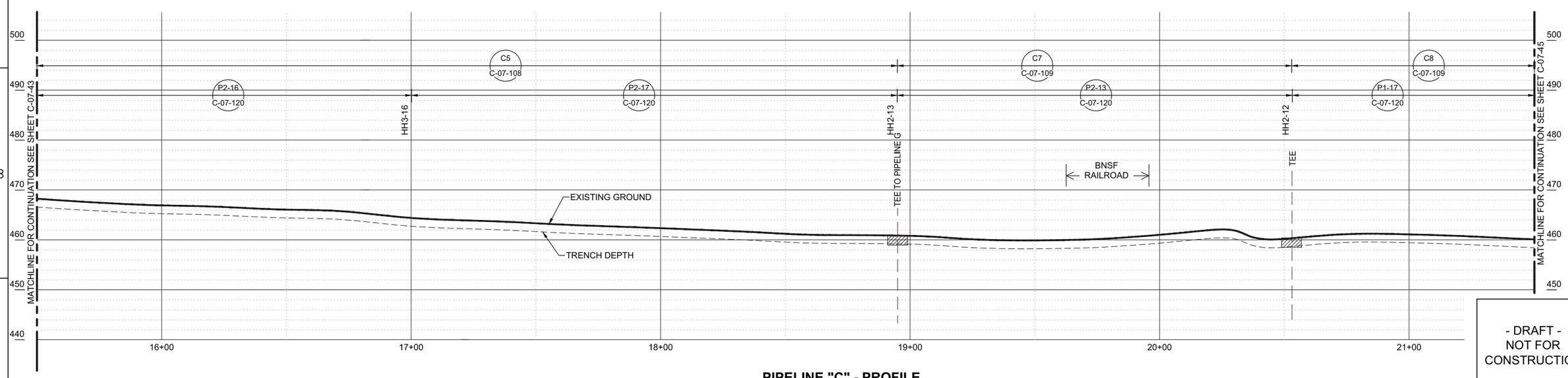

PIPELINE "C" - PROFILE

(SCALE: 1" = 20' H; 1" = 10' V)

- DRAFT -
NOT FOR CONSTRUCTION

ETIC ENGINEERING

ARCADIS

NO.	DATE	DESCRIPTION	GM/SPEC	DWN	CHKD	SUPV	APVD BY
1	09/08/14	PRE-FINAL (90%) DESIGN		AJW	BAS	JPB	JEF
0	04/05/13	INTERMEDIATE (60%) DESIGN		AJW	KLD	JPB	JEF

REVISIONS

APPROVED BY	
JEF	SO
	SUPV JPB
	DSGN BAS
	DWN AJW
	CHKD JPB
	OK JEF
	DATE 09/08/14
	SCALES 1" = 20'

TOPOCK GROUNDWATER REMEDIATION PROJECT
PIPELINE - PLAN AND PROFILE
PIPELINE "C5", "C7", & "C8"
STA 15+50 TO 21+50
GAS TRANSMISSION & DISTRIBUTION
PACIFIC GAS AND ELECTRIC COMPANY
SAN FRANCISCO, CALIFORNIA

MICROFILM
BILL OF MATL
DWG LIST
SUPSDS
SUPSD BY
SHEET NO. C-07-44 of SHEETS
REV 1

08/27/2014, 14:54, G:\Graphics\ARI\TOPOCK-01\Post 90%\C-07-39 to 59_Plan&Profile.dwg, Tab: 44

N1808

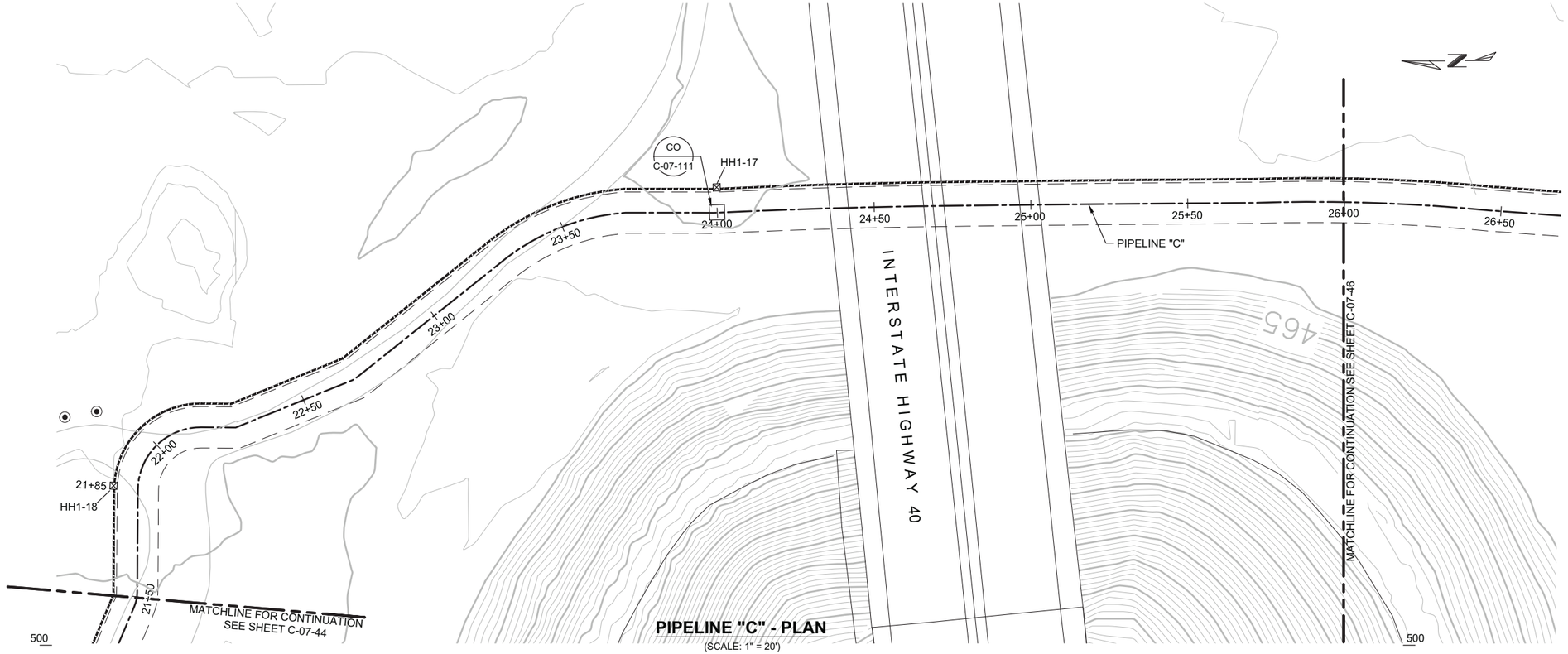

PIPELINE "C" - PLAN

(SCALE: 1" = 20')

NOTES

1. VAULT DETAILS SHOWN ON SHEETS M-X-X AND S-X-X.
2. SEE CONDUIT AND CABLE SCHEDULES AND SINGLE LINE DIAGRAMS ON SHEETS E-00-12 THRU E-00-20.
3. CLEANOUT LOCATIONS PROVIDE CLEANOUT PIPING FOR ALL INJECTION, EXTRACTION, BACKWASH, AND REMEDY-PRODUCED WATER LINES AT INDICATED LOCATIONS (SEE DETAIL C-07-111).

0 20 40 60
HORIZ: SCALE: 1"=20'

0 10 20 30
VERT: SCALE: 1"=10'

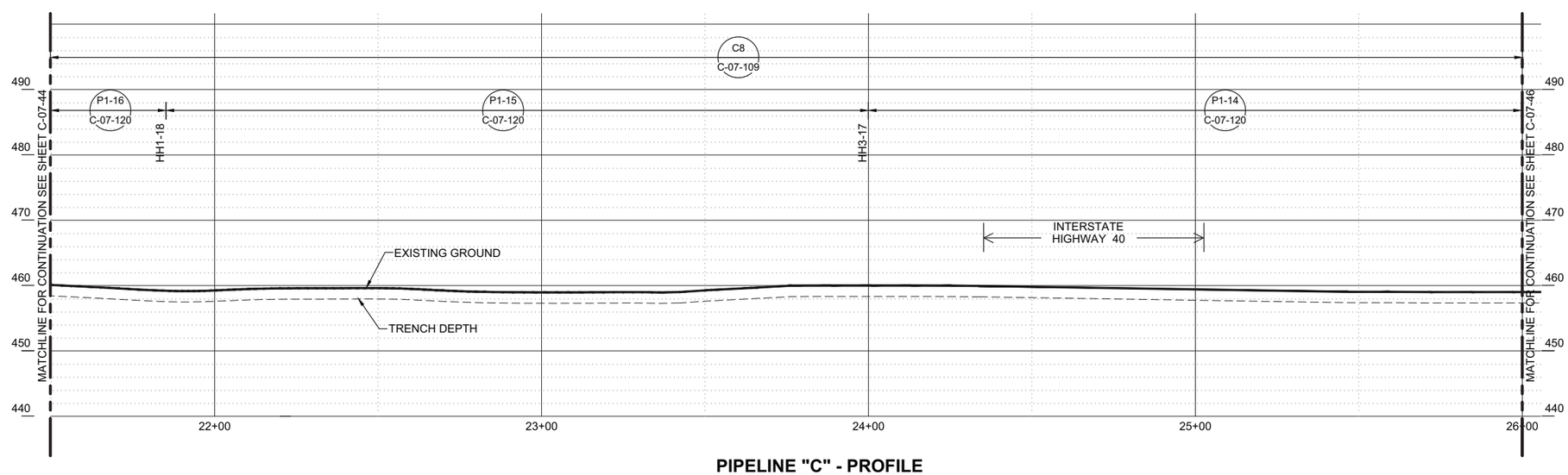

PIPELINE "C" - PROFILE

(SCALE: 1" = 20' H; 1" = 10' V)

- DRAFT -
NOT FOR
CONSTRUCTION

ETIC ENGINEERING

ARCADIS

NO.	DATE	DESCRIPTION	GM/SPEC	DWN	CHKD	SUPV	APVD	BY
1	09/08/14	PRE-FINAL (90%) DESIGN		AJW	BAS	JPB	JEF	
0	04/05/13	INTERMEDIATE (60%) DESIGN		AJW	KLD	JPB	JEF	

REVISIONS

APPROVED BY: JEF

SO	
SUPV	JPB
DSGN	BAS
DWN	AJW
CHKD	JPB
OK	JEF
DATE	09/08/14
SCALES	1" = 20'

TOPOCK GROUNDWATER REMEDIATION PROJECT

PIPELINE - PLAN AND PROFILE
PIPELINE "C8"
STA 21+50 TO STA 26+00

GAS TRANSMISSION & DISTRIBUTION
PACIFIC GAS AND ELECTRIC COMPANY
SAN FRANCISCO, CALIFORNIA

MICROFILM
BILL OF MATL
DWG LIST
SUPSDS
SUPSD BY
SHEET NO. of SHEETS

C-07-45 REV 1

08/27/2014, 14:54, G:\Graphics\ARI\TOPOCK-01\Post 90%\C-07-39 to 59_Plan&Profile.dwg, Tab: 45

N1808

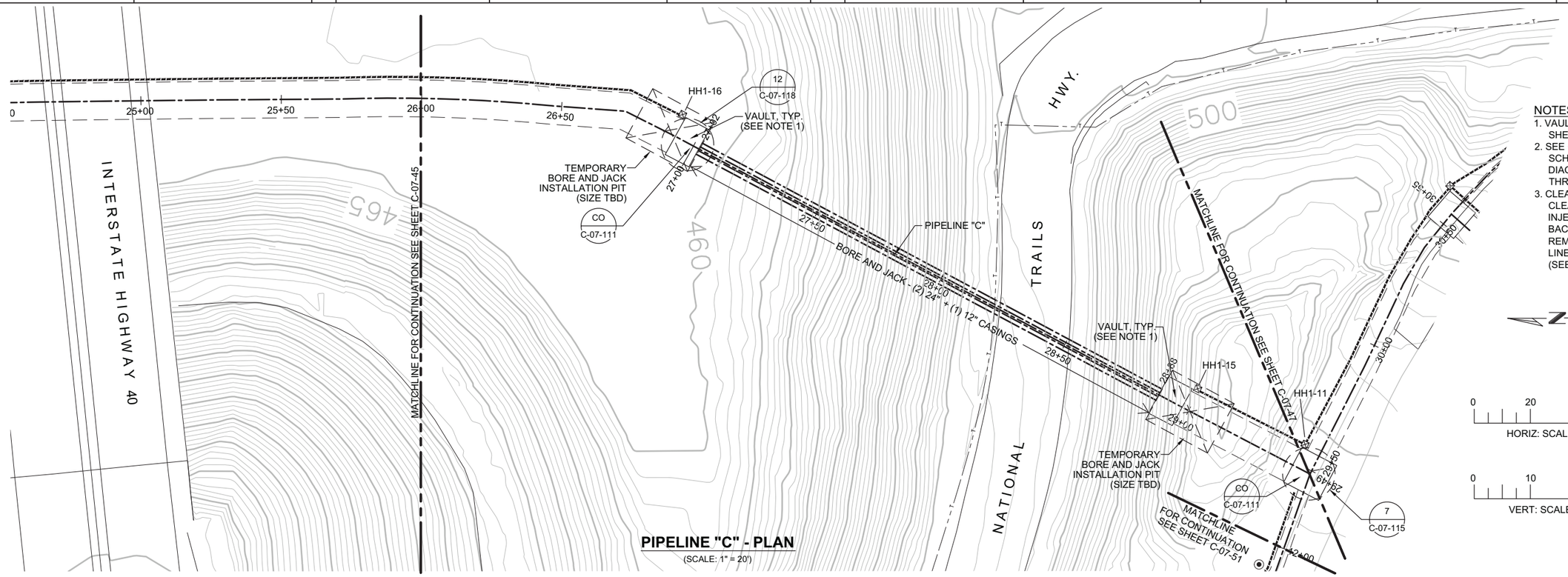

PIPELINE "C" - PLAN

(SCALE: 1" = 20')

NOTES

1. VAULT DETAILS SHOWN ON SHEETS M-X-X AND S-X-X.
2. SEE CONDUIT AND CABLE SCHEDULES AND SINGLE LINE DIAGRAMS ON SHEETS E-00-12 THRU E-00-20.
3. CLEANOUT LOCATIONS PROVIDE CLEANOUT PIPING FOR ALL INJECTION, EXTRACTION, BACKWASH, AND REMEDY-PRODUCED WATER LINES AT INDICATED LOCATIONS (SEE DETAIL C-07-111).

0 20 40 60
HORIZ: SCALE: 1"=20'

0 10 20 30
VERT: SCALE: 1"=10'

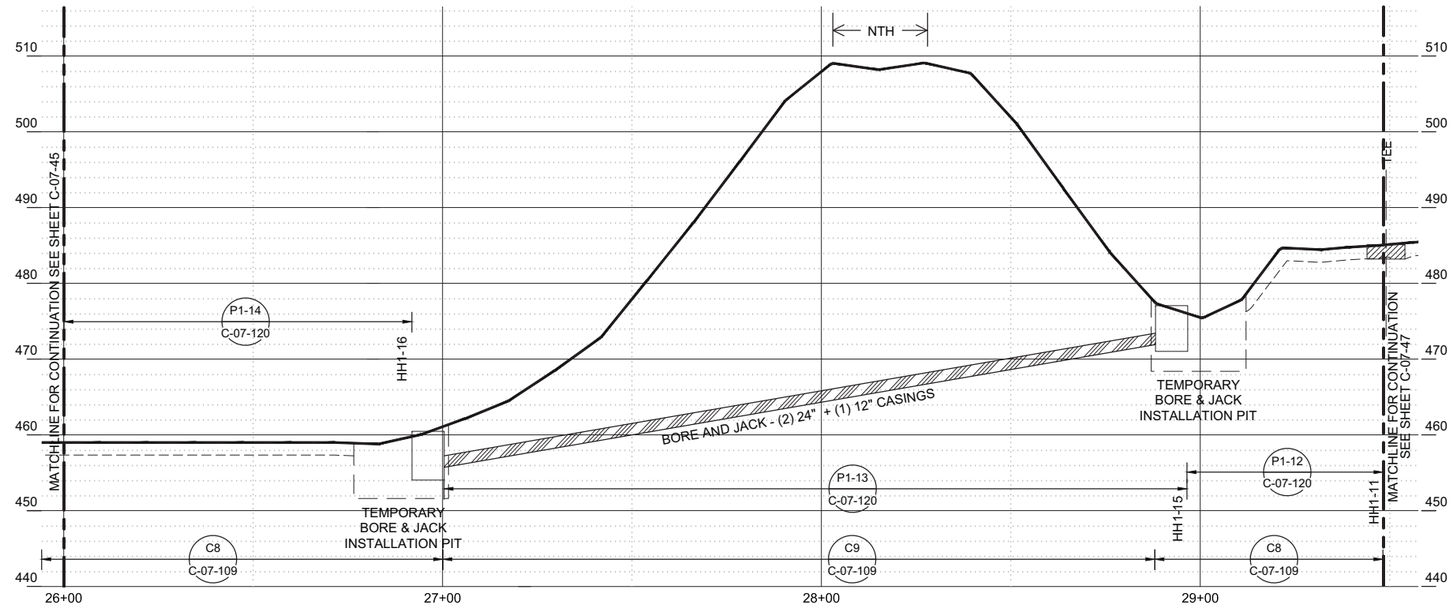

PIPELINE "C" - PROFILE

(SCALE: 1" = 20' H; 1" = 10' V)

- DRAFT -
NOT FOR
CONSTRUCTION

ETIC ENGINEERING

ARCADIS

NO.	DATE	DESCRIPTION	GM/SPEC	DWN	CHKD	SUPV	APVD BY
1	09/08/14	PRE-FINAL (90%) DESIGN		AJW	BAS	JPB	JEF
0	04/05/13	INTERMEDIATE (60%) DESIGN		AJW	KLD	JPB	JEF

REVISIONS

APPROVED BY	
JEF	SO
	SUPV JPB
	DSGN BAS
	DWN AJW
	CHKD JPB
	OK JEF
	DATE 09/08/14
	SCALES 1" = 20'

TOPOCK GROUNDWATER REMEDIATION PROJECT

PIPELINE - PLAN AND PROFILE
PIPELINE "C8" & "C9"
STA 26+00 TO STA 29+49

GAS TRANSMISSION & DISTRIBUTION
PACIFIC GAS AND ELECTRIC COMPANY
SAN FRANCISCO, CALIFORNIA

MICROFILM
BILL OF MATL
DWG LIST
SUPSDS
SUPSD BY
SHEET NO. of SHEETS
C-07-46
REV 1

08/27/2014, 14:55, G:\Graphics\ARI\TOPOCK-01\Post 90%\C-07-39 b 59_Plan&Profile.dwg, Tab: 46

N1808

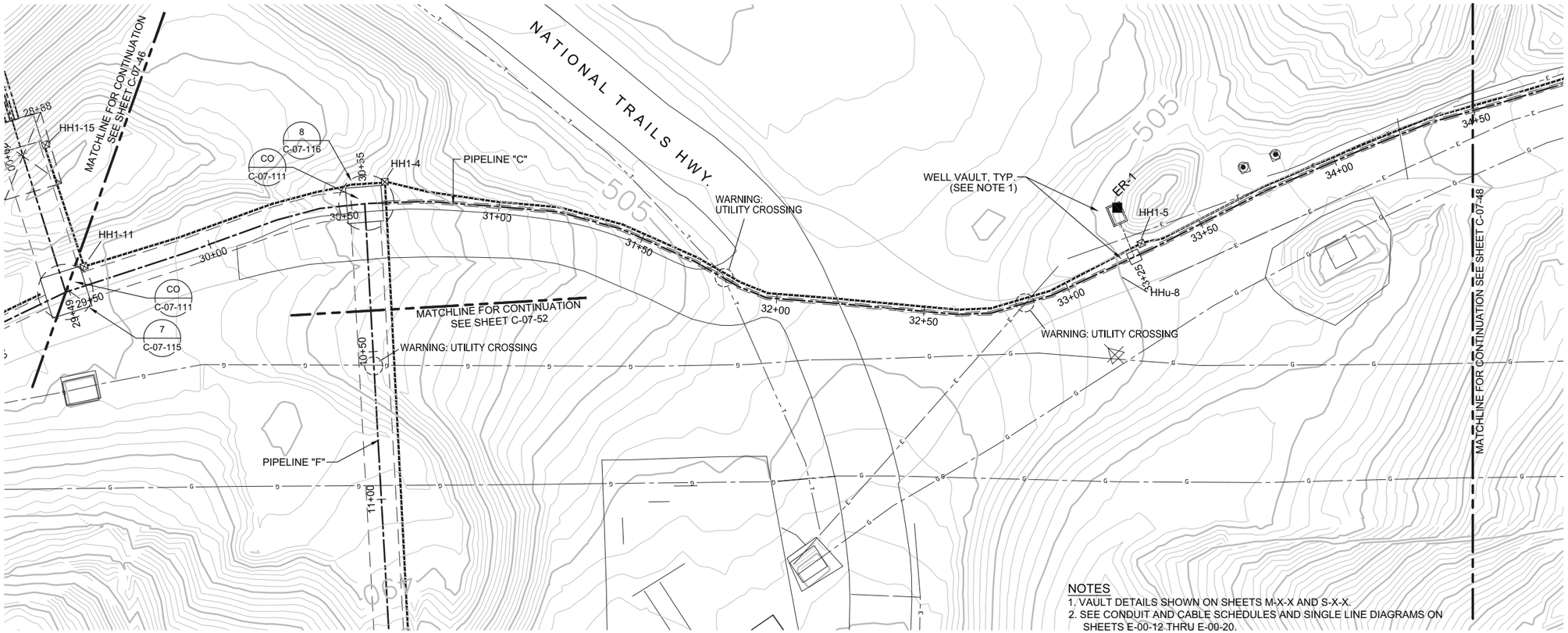

PIPELINE "C" - PLAN

(SCALE: 1" = 20')

NOTES

1. VAULT DETAILS SHOWN ON SHEETS M-X-X AND S-X-X.
2. SEE CONDUIT AND CABLE SCHEDULES AND SINGLE LINE DIAGRAMS ON SHEETS E-00-12 THRU E-00-20.
3. CLEANOUT LOCATIONS PROVIDE CLEANOUT PIPING FOR ALL INJECTION, EXTRACTION, BACKWASH, AND REMEDY-PRODUCED WATER LINES AT INDICATED LOCATIONS (SEE DETAIL C-07-111).

0 20 40 60
HORIZ: SCALE: 1"=20'

0 10 20 30
VERT: SCALE: 1"=10'

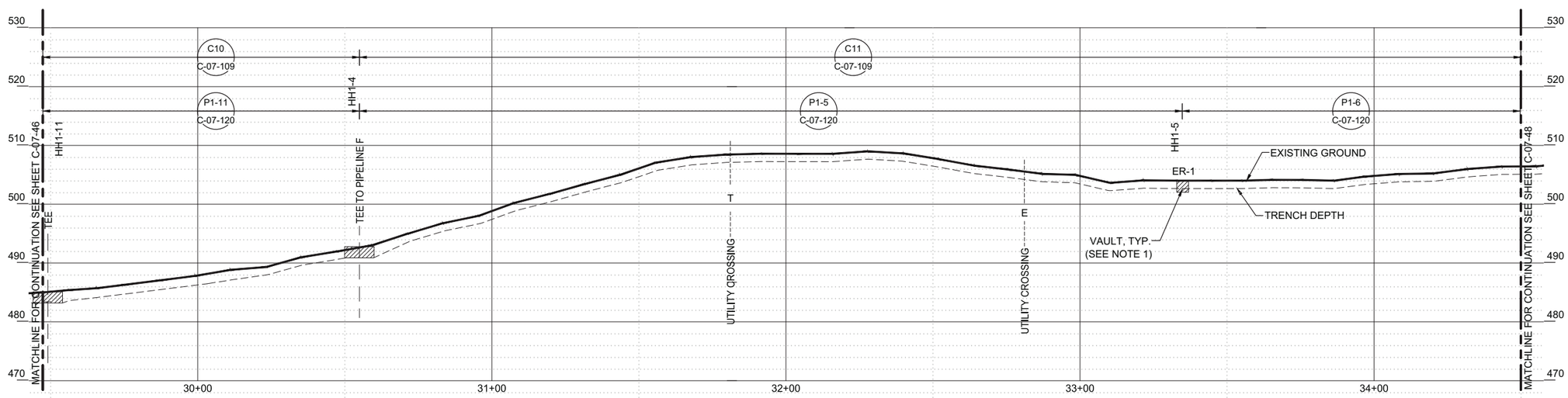

PIPELINE "C" - PROFILE

(SCALE: 1" = 20' H; 1" = 10' V)

- DRAFT -
NOT FOR CONSTRUCTION

ETIC ENGINEERING

ARCADIS

NO.	DATE	DESCRIPTION	GM/SPEC	DWN	CHKD	SUPV	APVD	BY
1	09/08/14	PRE-FINAL (90%) DESIGN		AJW	BAS	JPB	JEF	
0	04/05/13	INTERMEDIATE (60%) DESIGN		AJW	KLD	JPB	JEF	

REVISIONS

APPROVED BY: JEF

SO	
SUPV	JPB
DSGN	BAS
DWN	AJW
CHKD	JPB
OK	JEF
DATE	09/08/14
SCALES	1" = 20'

TOPOCK GROUNDWATER REMEDIATION PROJECT

PIPELINE - PLAN AND PROFILE
PIPELINE "C10" & "C11"
STA 29+49 TO STA 34+50

GAS TRANSMISSION & DISTRIBUTION
PACIFIC GAS AND ELECTRIC COMPANY
SAN FRANCISCO, CALIFORNIA

MICROFILM
BILL OF MATL
DWG LIST
SUPSDS
SUPSD BY
SHEET NO. of SHEETS
C-07-47
REV 1

08/27/2014, 14:55, G:\Graphics\ART\OPOCK-01\Post 90%\C-07-39 to 59_Plan&Profile.dwg, Tab: 47

N1808

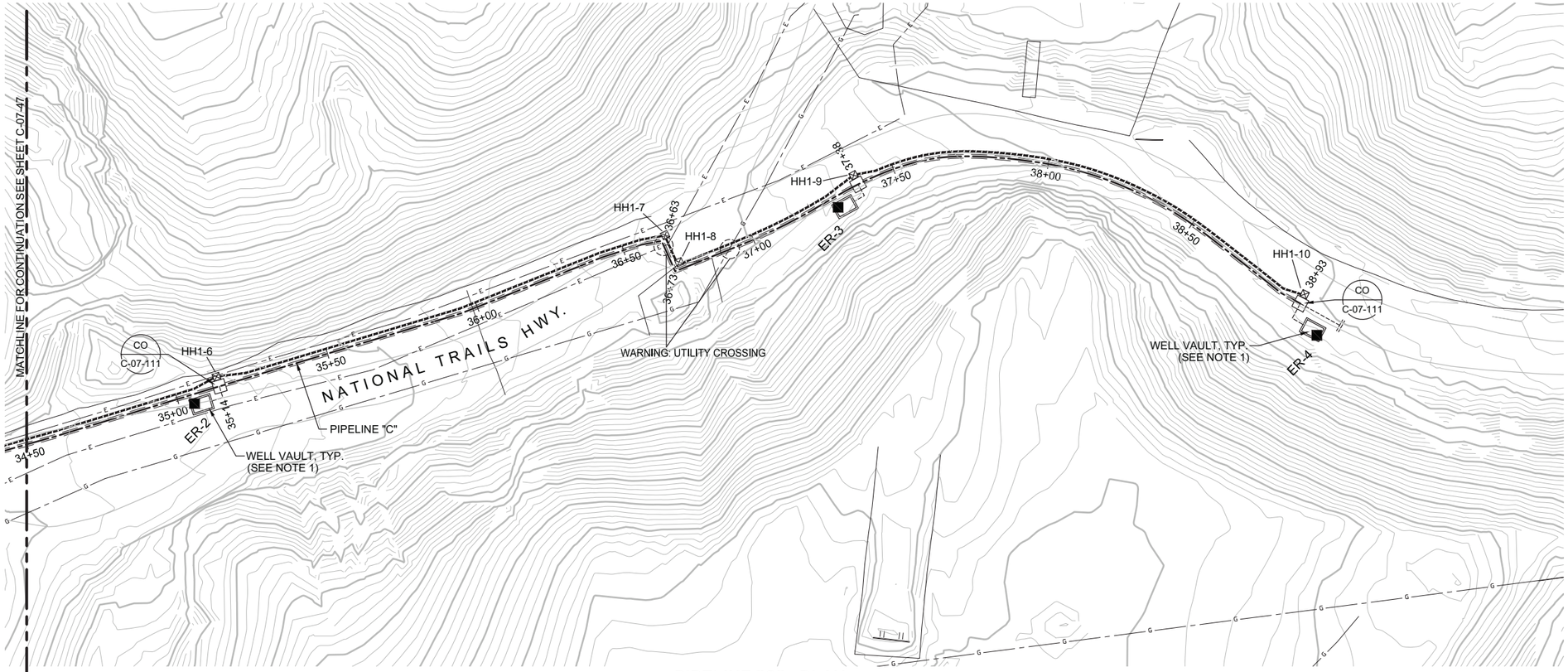

PIPELINE "C" - PLAN

(SCALE: 1" = 20')

NOTES

1. VAULT DETAILS SHOWN ON SHEETS M-X-X AND S-X-X.
2. SEE CONDUIT AND CABLE SCHEDULES AND SINGLE LINE DIAGRAMS ON SHEETS E-00-12 THRU E-00-20.
3. CLEANOUT LOCATIONS PROVIDE CLEANOUT PIPING FOR ALL INJECTION, EXTRACTION, BACKWASH, AND REMEDY-PRODUCED WATER LINES AT INDICATED LOCATIONS (SEE DETAIL C-07-111).

0 20 40 60
HORIZ: SCALE: 1"=20'

0 10 20 30
VERT: SCALE: 1"=10'

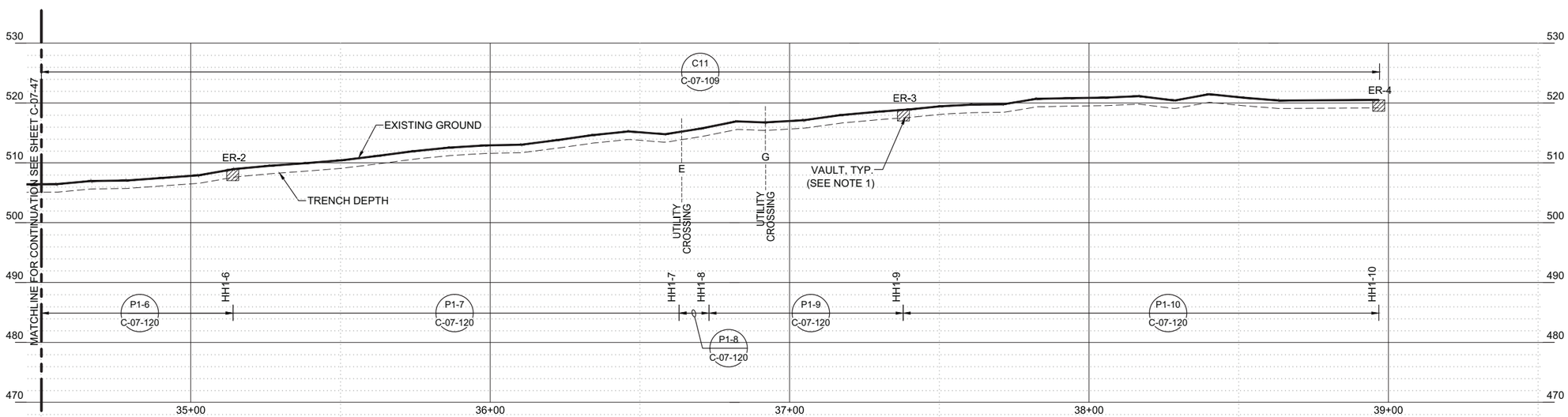

PIPELINE "C" - PROFILE

(SCALE: 1" = 20' H; 1" = 10' V)

- DRAFT -
NOT FOR
CONSTRUCTION

ETIC ENGINEERING

ARCADIS

NO.	DATE	DESCRIPTION	GM/SPEC	DWN	CHKD	SUPV	APVD BY
1	09/08/14	PRE-FINAL (90%) DESIGN	AJW	BAS	JPB	JEF	
0	04/05/13	INTERMEDIATE (60%) DESIGN	AJW	KLD	JPB	JEF	

REVISIONS

APPROVED BY: JEF

SO	
SUPV	JPB
DSGN	BAS
DWN	AJW
CHKD	JPB
OK	JEF
DATE	09/08/14
SCALES	1" = 20'

TOPOCK GROUNDWATER REMEDIATION PROJECT

PIPELINE - PLAN AND PROFILE
PIPELINE "C11"
STA 34+50 TO STA 38+93

GAS TRANSMISSION & DISTRIBUTION
PACIFIC GAS AND ELECTRIC COMPANY
SAN FRANCISCO, CALIFORNIA

MICROFILM
BILL OF MATL
DWG LIST
SUPSDS
SUPSD BY
SHEET NO. of SHEETS
C-07-48
REV 1

N1808

08/27/2014, 14:55, G:\Graphics\ART\OPOCK-01\Post 90%\C-07-39 to 59_Plan&Profile.dwg, Tab: 48

PIPELINE "C" - PLAN

(SCALE: 1" = 20')

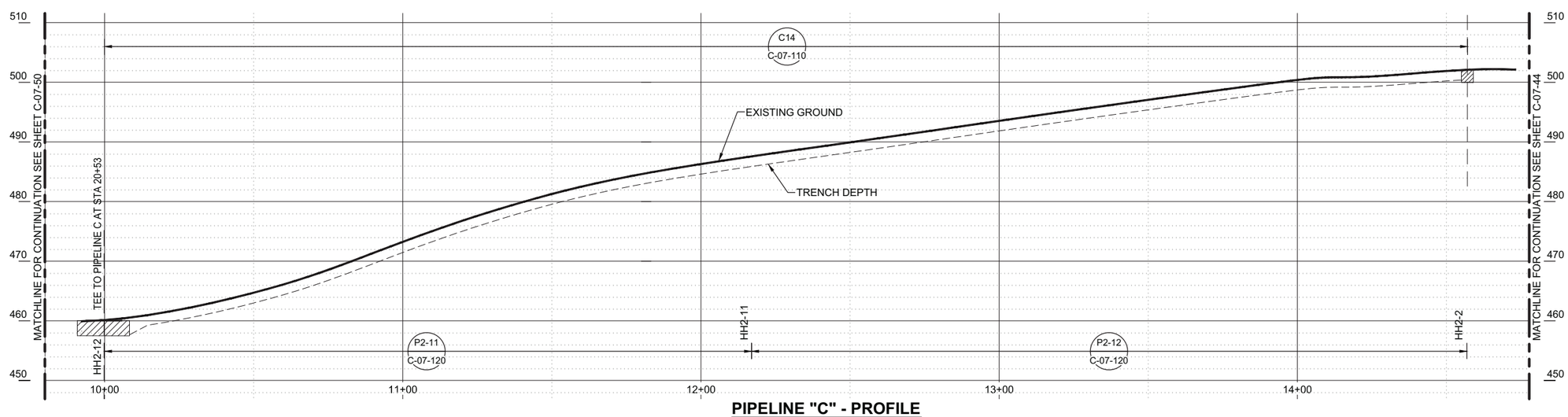

PIPELINE "C" - PROFILE

(SCALE: 1" = 20' H; 1" = 10' V)

NOTES

1. VAULT DETAILS SHOWN ON SHEETS M-X-X AND S-X-X.
2. SEE CONDUIT AND CABLE SCHEDULES AND SINGLE LINE DIAGRAMS ON SHEETS E-00-12 THRU E-00-20.
3. CLEANOUT LOCATIONS PROVIDE CLEANOUT PIPING FOR ALL INJECTION, EXTRACTION, BACKWASH, AND REMEDY-PRODUCED WATER LINES AT INDICATED LOCATIONS (SEE DETAIL C-07-111).

- DRAFT -
NOT FOR CONSTRUCTION

ETIC ENGINEERING

ARCADIS

NO.	DATE	DESCRIPTION	GM/SPEC	DWN	CHKD	SUPV	APVD BY
1	09/08/14	PRE-FINAL (90%) DESIGN		AJW	BAS	JPB	JEF
0	04/05/13	INTERMEDIATE (60%) DESIGN		AJW	KLD	JPB	JEF

REVISIONS

APPROVED BY: JEF

SO	
SUPV	JPB
DSGN	BAS
DWN	AJW
CHKD	JPB
OK	JEF
DATE	09/08/14
SCALES	1" = 20'

TOPOCK GROUNDWATER REMEDIATION PROJECT

PIPELINE - PLAN AND PROFILE
PIPELINE "C14"
STA 10+00 TO STA 14+56

GAS TRANSMISSION & DISTRIBUTION
PACIFIC GAS AND ELECTRIC COMPANY
SAN FRANCISCO, CALIFORNIA

MICROFILM
BILL OF MATL
DWG LIST
SUPSDS
SUPSD BY
SHEET NO. of SHEETS
C-07-49
REV 1

08/27/2014, 14:55, G:\Graphics\ARI\TOPOCK-01\Post 90%\C-07-39 to 59_Plan&Profile.dwg, Tab: 49

N1808

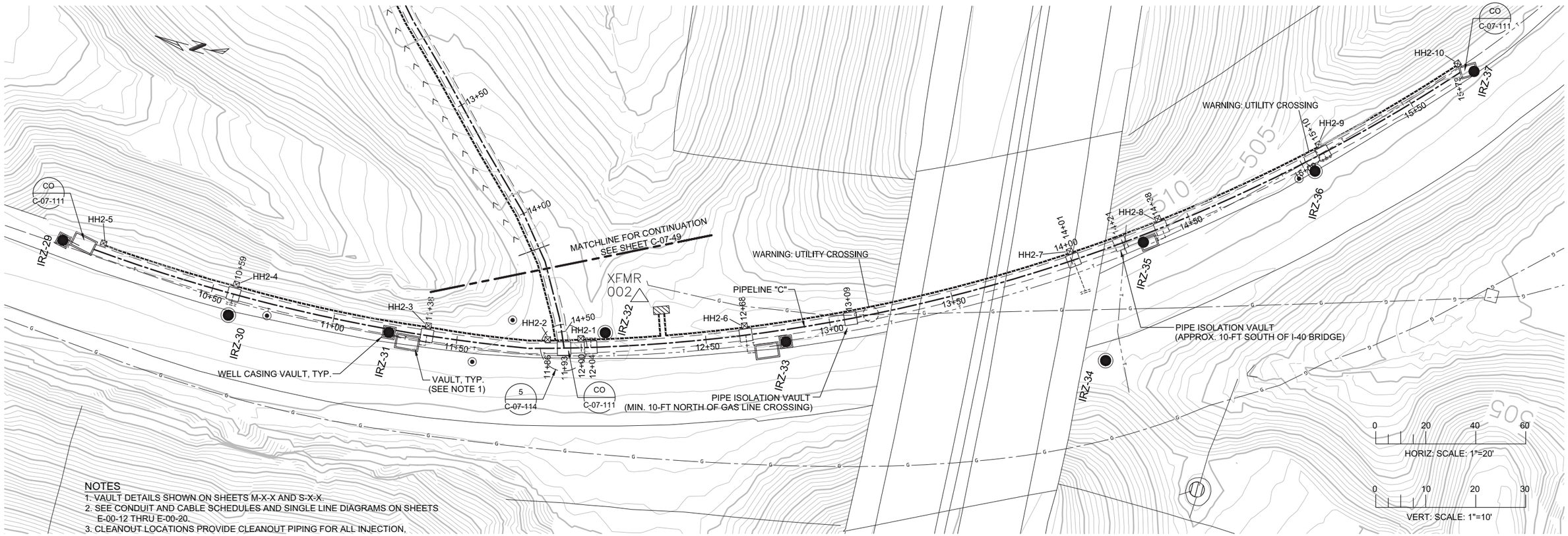

NOTES
1. VAULT DETAILS SHOWN ON SHEETS M-X-X AND S-X-X.
2. SEE CONDUIT AND CABLE SCHEDULES AND SINGLE LINE DIAGRAMS ON SHEETS E-00-12 THRU E-00-20.
3. CLEANOUT LOCATIONS PROVIDE CLEANOUT PIPING FOR ALL INJECTION, EXTRACTION, BACKWASH, AND REMEDY-PRODUCED WATER LINES AT INDICATED LOCATIONS (SEE DETAIL C-07-111).

PIPELINE "C" - PLAN

(SCALE: 1" = 20')

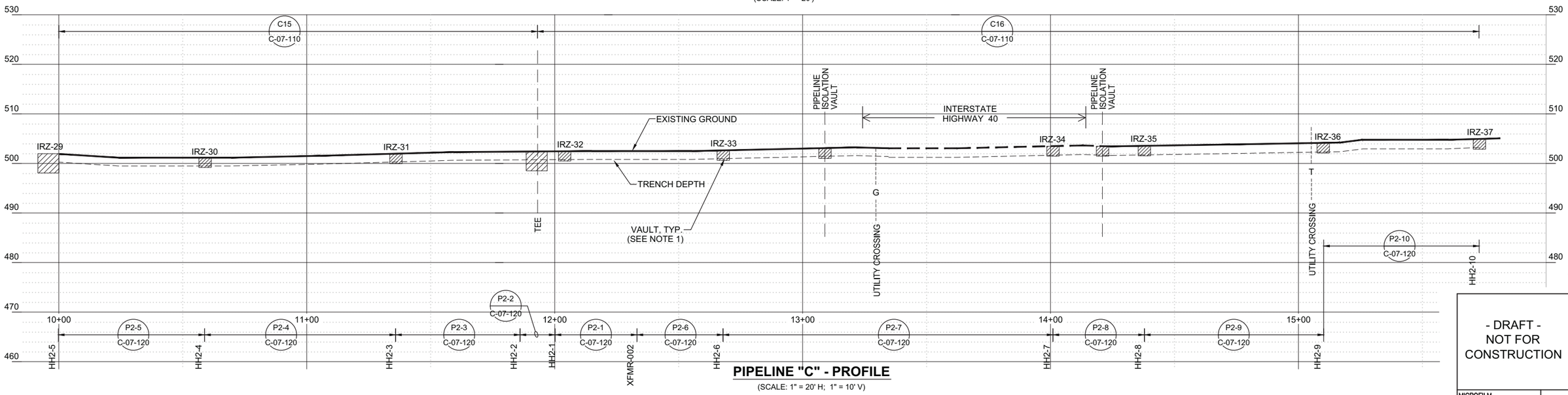

PIPELINE "C" - PROFILE

(SCALE: 1" = 20' H; 1" = 10' V)

- DRAFT -
NOT FOR
CONSTRUCTION

ETIC ENGINEERING

ARCADIS

NO.	DATE	DESCRIPTION	GM/SPEC	DWN	CHKD	SUPV	APVD BY
1	09/08/14	PRE-FINAL (90%) DESIGN		AJW	BAS	JPB	JEF
0	04/05/13	INTERMEDIATE (60%) DESIGN		AJW	KLD	JPB	JEF

REVISIONS

APPROVED BY: JEF

SO	
SUPV	JPB
DSGN	BAS
DWN	AJW
CHKD	JPB
OK	JEF
DATE	09/08/14
SCALES	1" = 20'

TOPOCK GROUNDWATER REMEDIATION PROJECT

PIPELINE - PLAN AND PROFILE
PIPELINE " C15" & "C16"
STA 10+00 TO STA 15+73

GAS TRANSMISSION & DISTRIBUTION
PACIFIC GAS AND ELECTRIC COMPANY
SAN FRANCISCO, CALIFORNIA

MICROFILM
BILL OF MATL
DWG LIST
SUPSDS
SUPSD BY
SHEET NO. of SHEETS: C-07-50
REV 1

N1808

08/27/2014, 14:55, G:\Graphics\AR\TOPOCK-01\Post 90%\C-07-39 to 59_Plan&Profile.dwg, Tab: 50

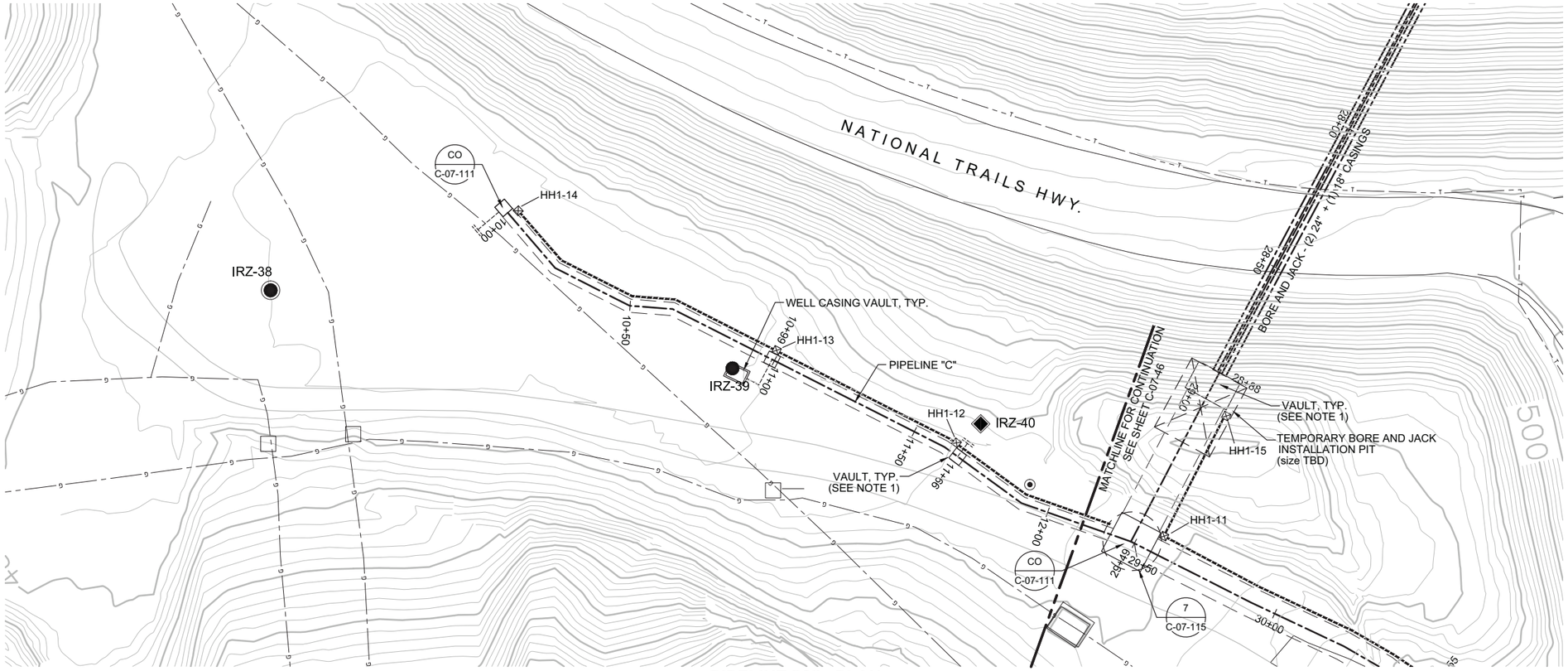

PIPELINE "C" - PLAN

(SCALE: 1" = 20')

NOTES

1. VAULT DETAILS SHOWN ON SHEETS M-X-X AND S-X-X.
2. SEE CONDUIT AND CABLE SCHEDULES AND SINGLE LINE DIAGRAMS ON SHEETS E-00-12 THRU E-00-20.
3. CLEANOUT LOCATIONS PROVIDE CLEANOUT PIPING FOR ALL INJECTION, EXTRACTION, BACKWASH, AND REMEDY-PRODUCED WATER LINES AT INDICATED LOCATIONS (SEE DETAIL C-07-111).

0 20 40 60
HORIZ: SCALE: 1"=20'

0 10 20 30
VERT: SCALE: 1"=10'

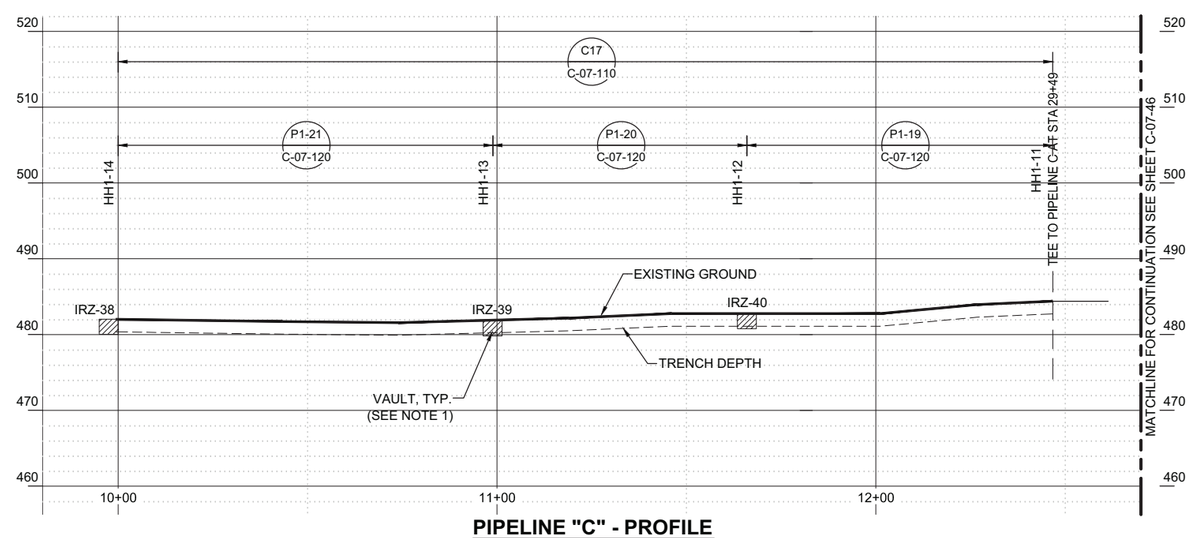

PIPELINE "C" - PROFILE

(SCALE: 1" = 20' H; 1" = 10' V)

- DRAFT -
NOT FOR
CONSTRUCTION

ETIC ENGINEERING

ARCADIS

NO.	DATE	DESCRIPTION	GM/SPEC	DWN	CHKD	SUPV	APVD BY
1	09/08/14	PRE-FINAL (90%) DESIGN		AJW	BAS	JPB	JEF
0	04/05/13	INTERMEDIATE (60%) DESIGN		AJW	KLD	JPB	JEF

REVISIONS

APPROVED BY: JEF

SO
SUPV JPB
DSGN BAS
DWN AJW
CHKD JPB
OK JEF
DATE 09/08/14
SCALES 1" = 20'

TOPOCK GROUNDWATER REMEDIATION PROJECT

PIPELINE - PLAN AND PROFILE
PIPELINE "C17"
STA 10+00 TO STA 12+28

GAS TRANSMISSION & DISTRIBUTION
PACIFIC GAS AND ELECTRIC COMPANY
SAN FRANCISCO, CALIFORNIA

MICROFILM
BILL OF MATL
DWG LIST
SUPSDS
SUPSD BY
SHEET NO. of SHEETS
C-07-51
REV 1

08/27/2014, 14:55, G:\Graphics\ART\OPOCK-01\Post 90%\C-07-39 to 59_Plan&Profile.dwg, Tab: 51

N1808

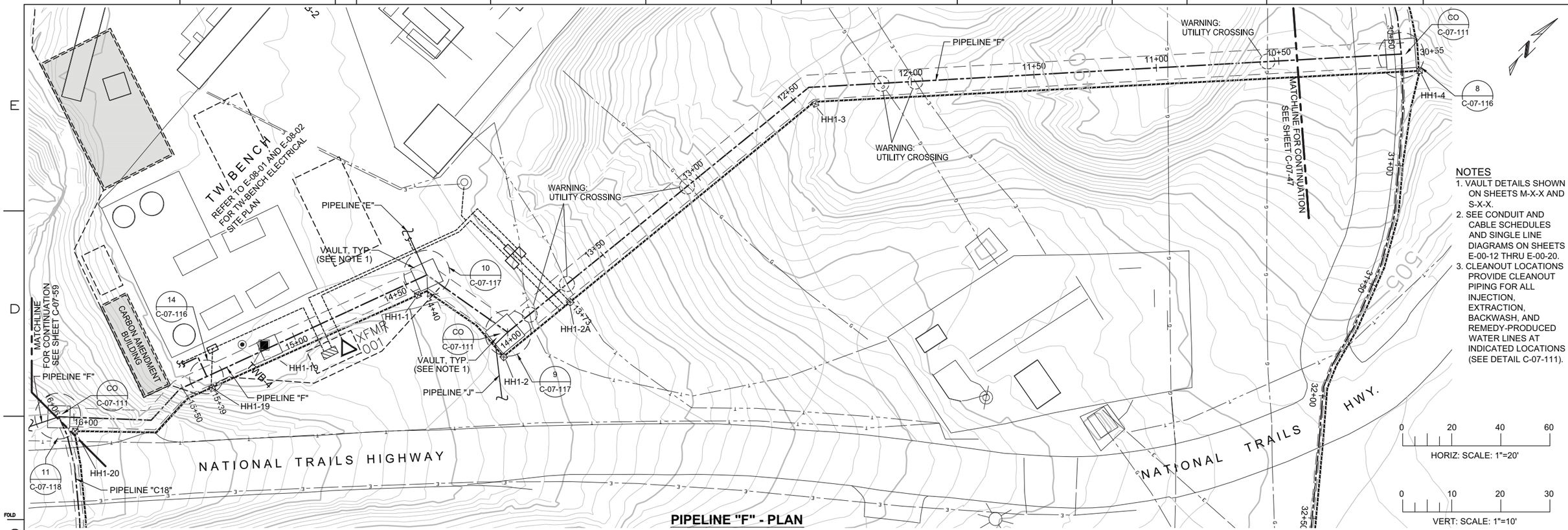

PIPELINE "F" - PLAN

(SCALE: 1" = 20')

NOTES

1. VAULT DETAILS SHOWN ON SHEETS M-X-X AND S-X-X.
2. SEE CONDUIT AND CABLE SCHEDULES AND SINGLE LINE DIAGRAMS ON SHEETS E-00-12 THRU E-00-20.
3. CLEANOUT LOCATIONS PROVIDE CLEANOUT PIPING FOR ALL INJECTION, EXTRACTION, BACKWASH, AND REMEDY-PRODUCED WATER LINES AT INDICATED LOCATIONS (SEE DETAIL C-07-111).

HORIZ: SCALE: 1"=20'

VERT: SCALE: 1"=10'

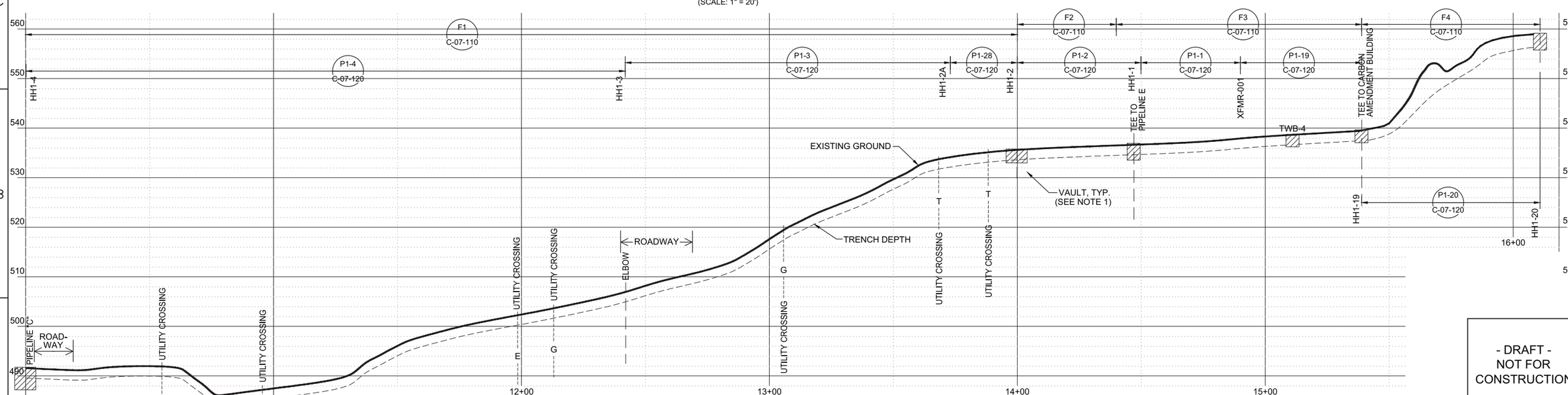

PIPELINE "F" - PROFILE

(SCALE: 1" = 20' H; 1" = 10' V)

- DRAFT -
NOT FOR CONSTRUCTION

ETIC ENGINEERING

ARCADIS

NO.	DATE	DESCRIPTION	GM/SPEC	DWN	CHKD	SUPV	APVD BY
1	09/08/14	PRE-FINAL (90%) DESIGN		AJW	BAS	JPB	JEF
0	04/05/13	INTERMEDIATE (60%) DESIGN		AJW	KLD	JPB	JEF

REVISIONS

APPROVED BY: JEF

SO	
SUPV	JPB
DSGN	BAS
DWN	AJW
CHKD	JPB
OK	JEF
DATE	09/08/14
SCALES	1" = 20'

TOPOCK GROUNDWATER REMEDIATION PROJECT

PIPELINE - PLAN AND PROFILE PIPELINE "F" STA 10+00 TO STA 16+11

GAS TRANSMISSION & DISTRIBUTION

PACIFIC GAS AND ELECTRIC COMPANY
SAN FRANCISCO, CALIFORNIA

MICROFILM
BILL OF MATL
DWG LIST
SUPSDS
SUPSD BY
SHEET NO. of SHEETS

C-07-52 | REV 1

08/27/2014, 14:56, G:\Graphics\ART\OPOCK-01\Post 90%\C-07-39 to 59_Plan&Profile.dwg, Tab: 52

N1808

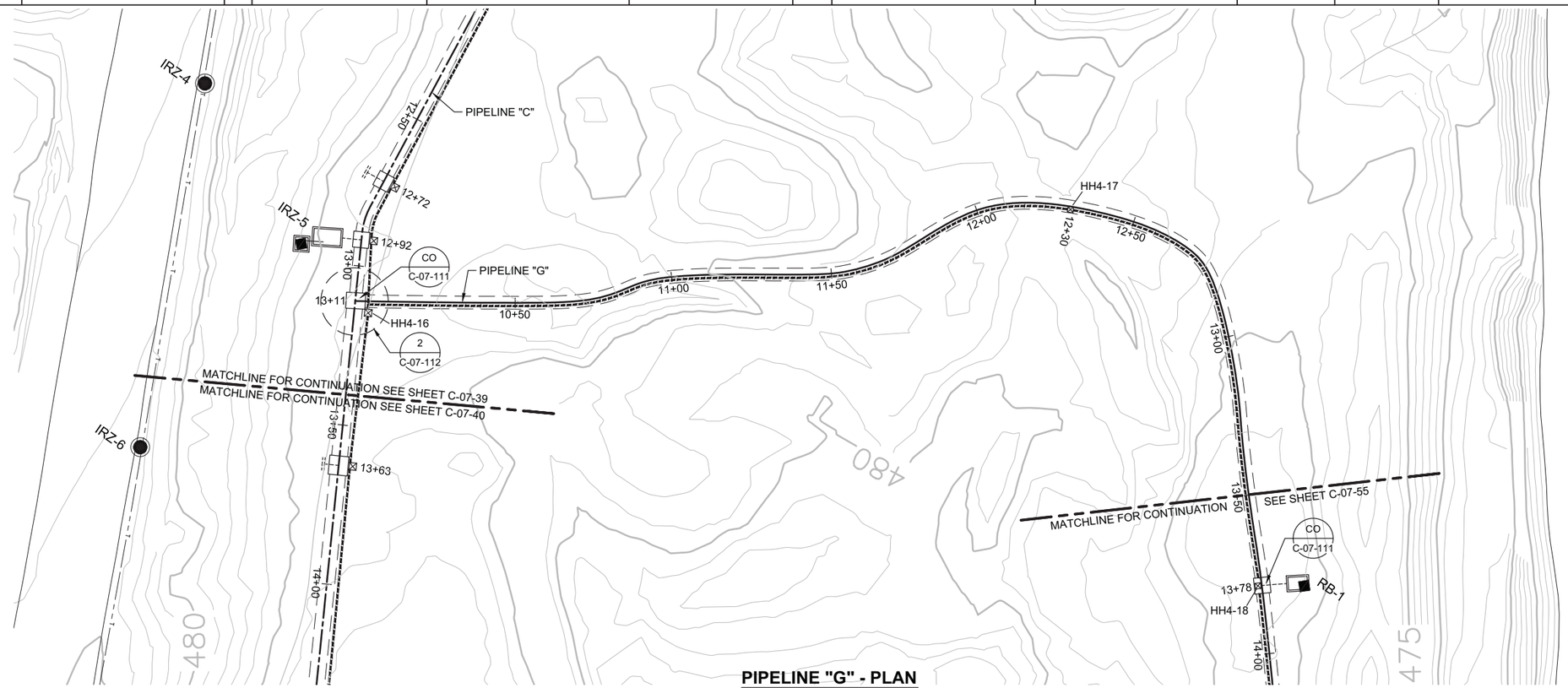

PIPELINE "G" - PLAN

(SCALE: 1" = 20')

0 20 40 60
HORIZ: SCALE: 1"=20'

0 10 20 30
VERT: SCALE: 1"=10'

NOTES
1. VAULT DETAILS SHOWN ON SHEETS M-X-X AND S-X-X.
2. SEE CONDUIT AND CABLE SCHEDULES AND SINGLE LINE DIAGRAMS ON SHEETS E-00-12 THRU E-00-20.
3. CLEANOUT LOCATIONS PROVIDE CLEANOUT PIPING FOR ALL INJECTION, EXTRACTION, BACKWASH, AND REMEDY-PRODUCED WATER LINES AT INDICATED LOCATIONS (SEE DETAIL C-07-111).

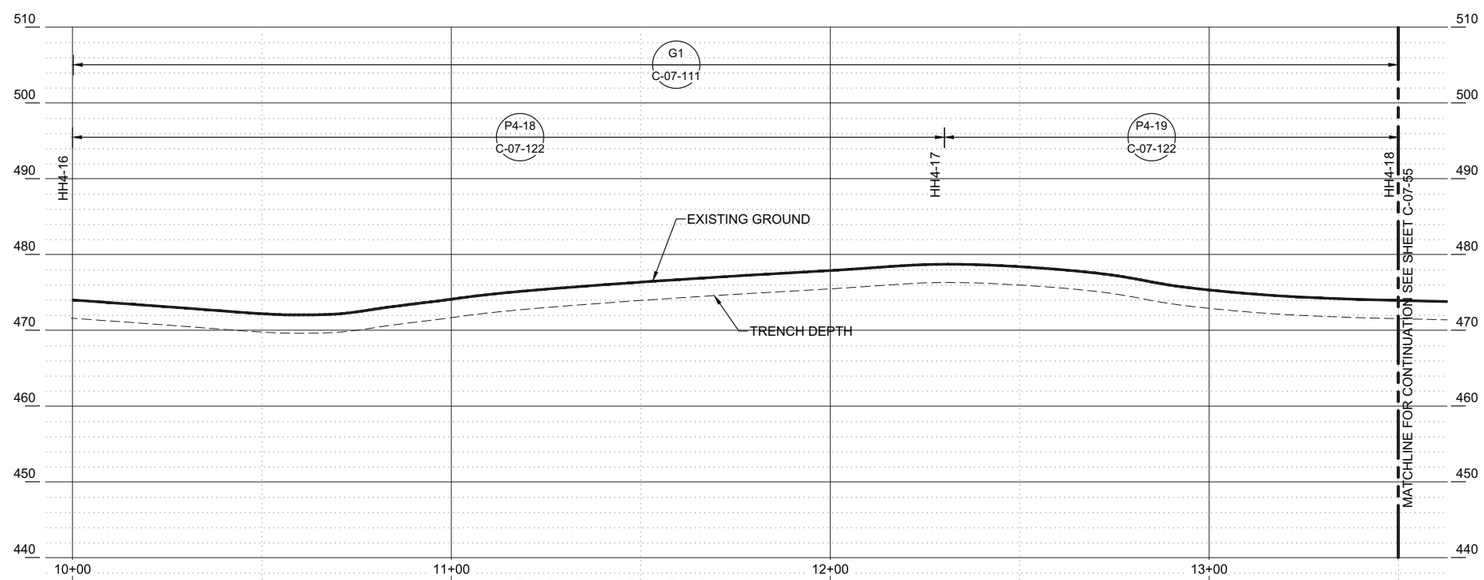

PIPELINE "G" - PROFILE

(SCALE: 1" = 20' H; 1" = 10' V)

- DRAFT -
NOT FOR
CONSTRUCTION

ETIC ENGINEERING

ARCADIS

NO.	DATE	DESCRIPTION	GM/SPEC	DWN	CHKD	SUPV	APVD	BY
1	09/08/14	PRE-FINAL (90%) DESIGN		AJW	BAS	JPB	JEF	
0	04/05/13	INTERMEDIATE (60%) DESIGN		AJW	KLD	JPB	JEF	

REVISIONS

APPROVED BY	
JEF	
SO	
SUPV	JPB
DSGN	BAS
DWN	AJW
CHKD	JPB
OK	JEF
DATE	09/08/14
SCALES	1" = 20'

TOPOCK GROUNDWATER REMEDIATION PROJECT
PIPELINE - PLAN AND PROFILE
PIPELINE "G1"
STA 10+00 TO STA 13+50
GAS TRANSMISSION & DISTRIBUTION
PACIFIC GAS AND ELECTRIC COMPANY
SAN FRANCISCO, CALIFORNIA

MICROFILM
BILL OF MATL
DWG LIST
SUPSDS
SUPSD BY
SHEET NO. of SHEETS
C-07-54
REV 1

08/27/2014, 14:56, G:\Graphics\ARI\TOPOCK-01\Post 90%\C-07-39 to 59_Plan&Profile.dwg, Tab: 54

N1808

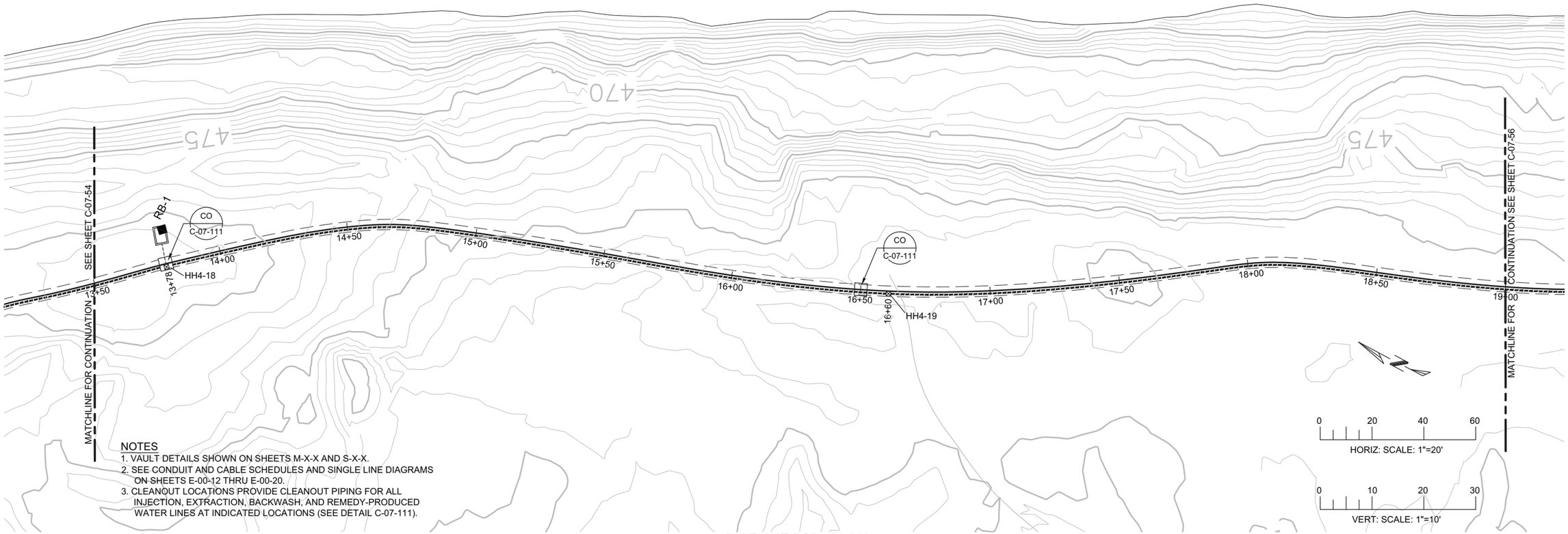

NOTES
1. VAULT DETAILS SHOWN ON SHEETS M-X-X AND S-X-X.
2. SEE CONDUIT AND CABLE SCHEDULES AND SINGLE LINE DIAGRAMS ON SHEETS E-00-12 THRU E-00-20.
3. CLEANOUT LOCATIONS PROVIDE CLEANOUT PIPING FOR ALL INJECTION, EXTRACTION, BACKWASH, AND REMEDY-PRODUCED WATER LINES AT INDICATED LOCATIONS (SEE DETAIL C-07-111).

PIPELINE "G" - PLAN

(SCALE: 1" = 20')

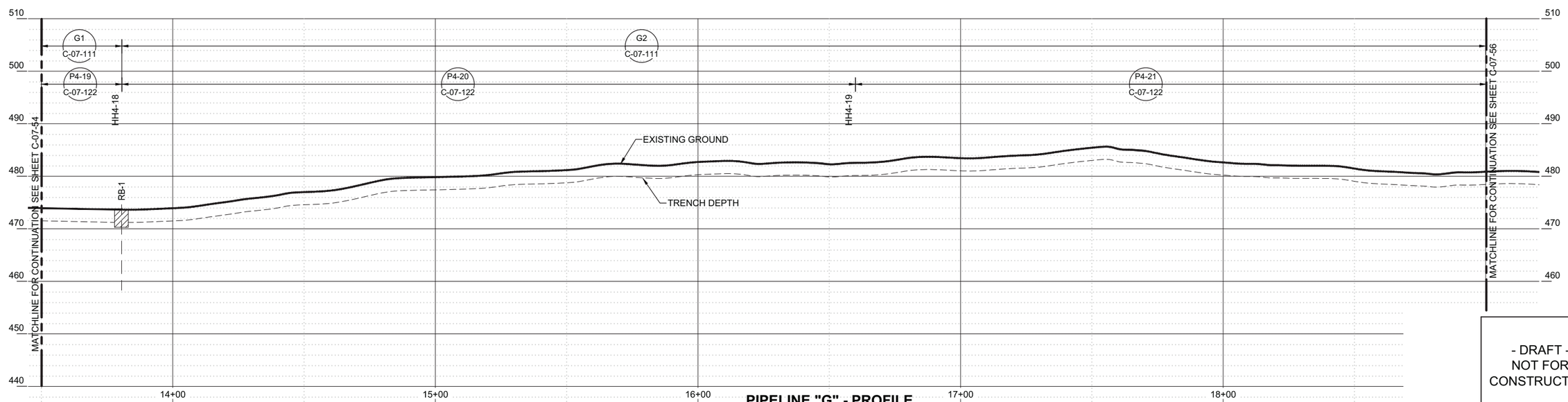

PIPELINE "G" - PROFILE

(SCALE: 1" = 20' H; 1" = 10' V)

- DRAFT -
NOT FOR
CONSTRUCTION

ETIC ENGINEERING

ARCADIS

NO.	DATE	DESCRIPTION	GM/SPEC	DWN	CHKD	SUPV	APVD BY
1	09/08/14	PRE-FINAL (90%) DESIGN		AJW	BAS	JPB	JEF
0	04/05/13	INTERMEDIATE (60%) DESIGN		AJW	KLD	JPB	JEF

REVISIONS

APPROVED BY: JEF

SO	
SUPV	JPB
DSGN	BAS
DWN	AJW
CHKD	JPB
OK	JEF
DATE	09/08/14
SCALES	1" = 20'

TOPOCK GROUNDWATER REMEDIATION PROJECT

PIPELINE - PLAN AND PROFILE
PIPELINE "G2" & "G3"
STA 13+50 TO STA 19+00

GAS TRANSMISSION & DISTRIBUTION
PACIFIC GAS AND ELECTRIC COMPANY
SAN FRANCISCO, CALIFORNIA

MICROFILM
BILL OF MATL
DWG LIST
SUPSDS
SUPSD BY
SHEET NO. of SHEETS
C-07-55
REV 1

09/27/2014, 14:56, G:\Graphics\ARI\TOPOCK-01\Post 90%\C-07-39 to 59_Plan&Profile.dwg, Tab: 55

N1808

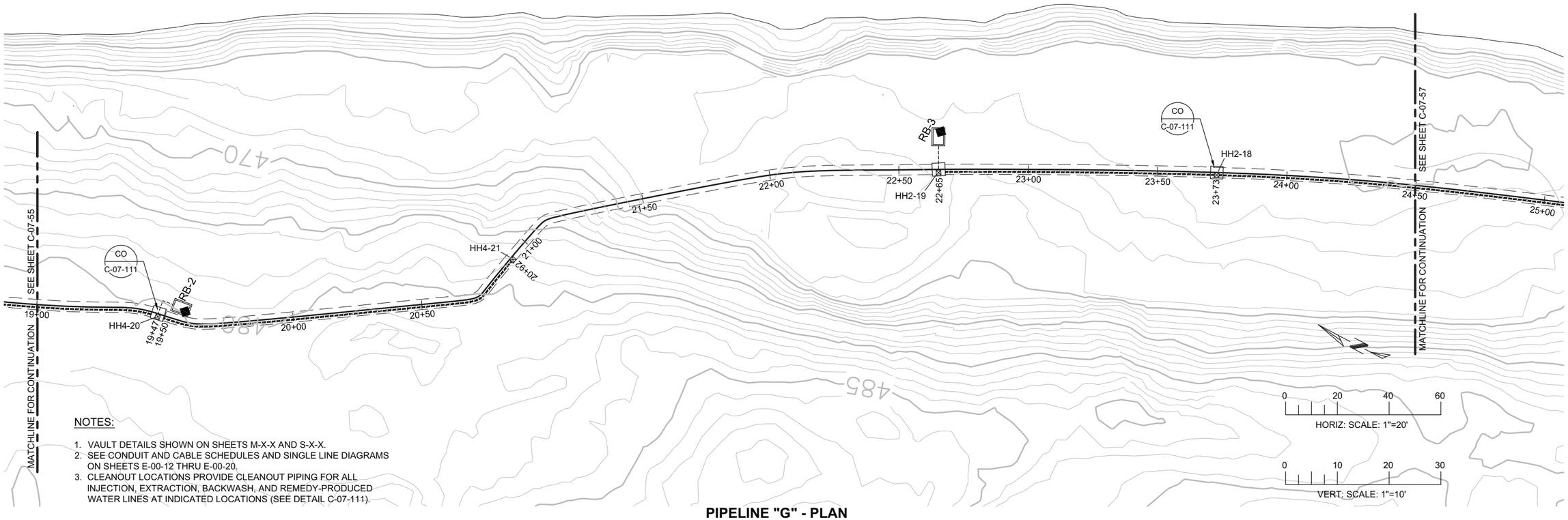

NOTES:

1. VAULT DETAILS SHOWN ON SHEETS M-X-X AND S-X-X.
2. SEE CONDUIT AND CABLE SCHEDULES AND SINGLE LINE DIAGRAMS ON SHEETS E-00-12 THRU E-00-20.
3. CLEANOUT LOCATIONS PROVIDE CLEANOUT PIPING FOR ALL INJECTION, EXTRACTION, BACKWASH, AND REMEDY-PRODUCED WATER LINES AT INDICATED LOCATIONS (SEE DETAIL C-07-111).

PIPELINE "G" - PLAN

(SCALE: 1" = 20')

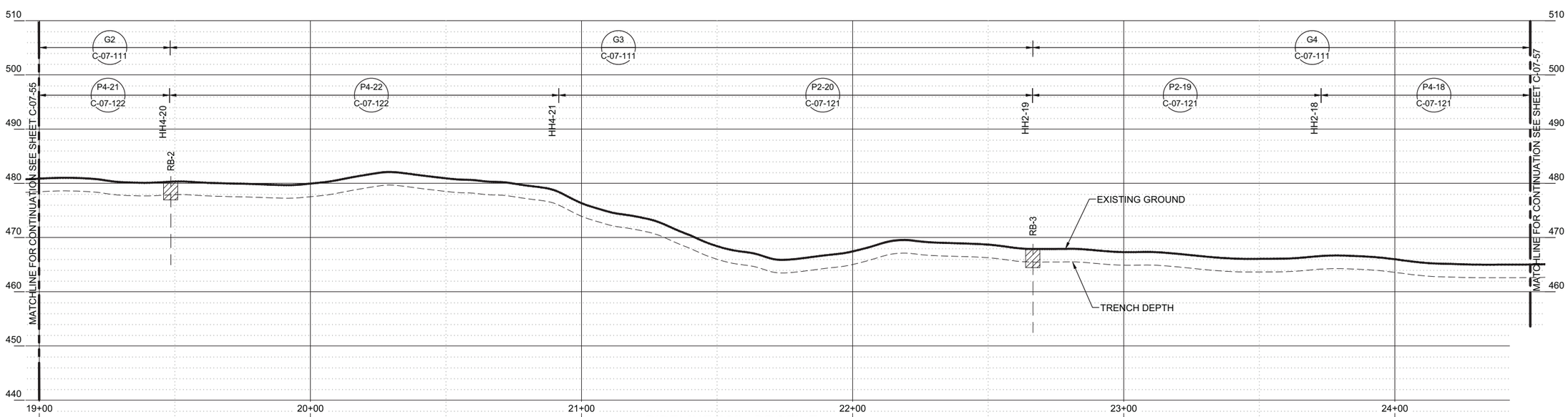

PIPELINE "G" - PROFILE

(SCALE: 1" = 20' H; 1" = 10' V)

- DRAFT -
NOT FOR CONSTRUCTION

ETIC ENGINEERING

ARCADIS

NO.	DATE	DESCRIPTION	GM/SPEC	DWN	CHKD	SUPV	APVD BY
1	09/08/14	PRE-FINAL (90%) DESIGN	AJW	BAS	JPB	JEF	
0	04/05/13	INTERMEDIATE (60%) DESIGN	AJW	KLD	JPB	JEF	

REVISIONS

APPROVED BY: JEF

SO	
SUPV	JPB
DSGN	BAS
DWN	AJW
CHKD	JPB
OK	JEF
DATE	09/08/14
SCALES	1" = 20'

TOPOCK GROUNDWATER REMEDIATION PROJECT

PIPELINE - PLAN AND PROFILE
PIPELINE "G2", "G3", & G4"
STA 19+50 TO STA 24+50

GAS TRANSMISSION & DISTRIBUTION
PACIFIC GAS AND ELECTRIC COMPANY
SAN FRANCISCO, CALIFORNIA

MICROFILM
BILL OF MATL
DWG LIST
SUPSDS
SUPSD BY
SHEET NO. of SHEETS
C-07-56
REV 1

09/27/2014, 14:56, G:\Graphics\ART\TOPOCK-01\Post 90%\C-07-39 to 59_Plan&Profile.dwg, Tab: 56

N1B08

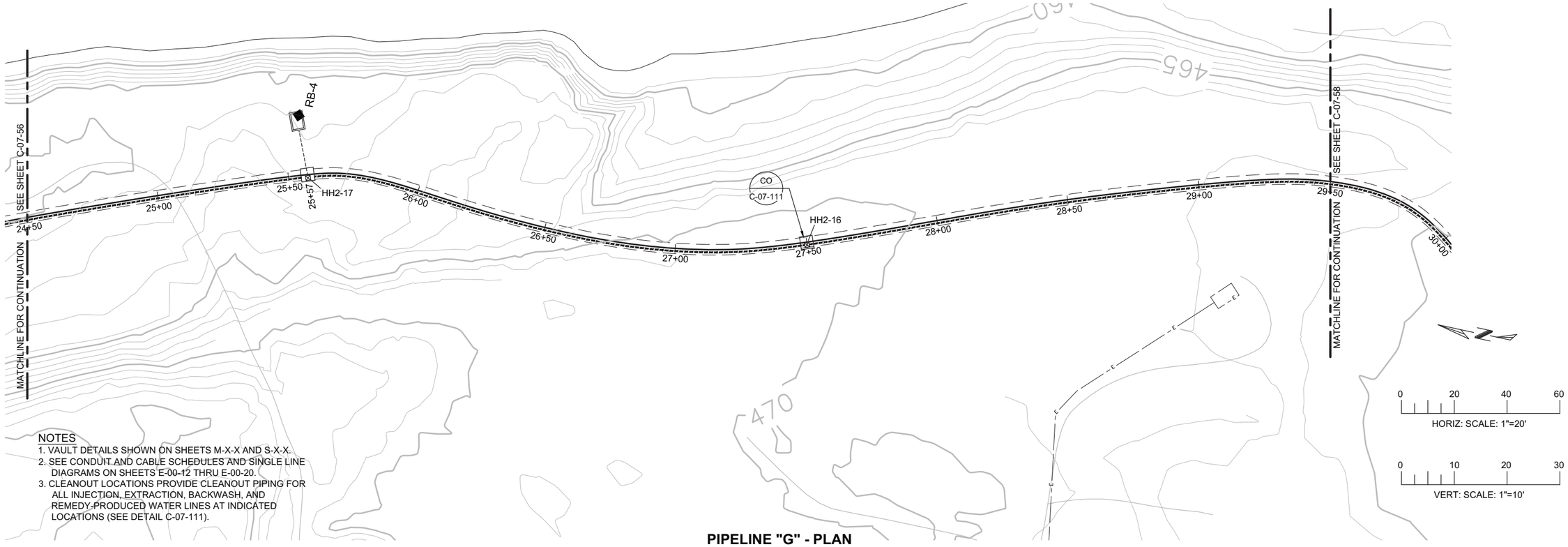

NOTES
1. VAULT DETAILS SHOWN ON SHEETS M-X-X AND S-X-X.
2. SEE CONDUIT AND CABLE SCHEDULES AND SINGLE LINE DIAGRAMS ON SHEETS E-00-12 THRU E-00-20.
3. CLEANOUT LOCATIONS PROVIDE CLEANOUT PIPING FOR ALL INJECTION, EXTRACTION, BACKWASH, AND REMEDY-PRODUCED WATER LINES AT INDICATED LOCATIONS (SEE DETAIL C-07-111).

PIPELINE "G" - PLAN

(SCALE: 1" = 20')

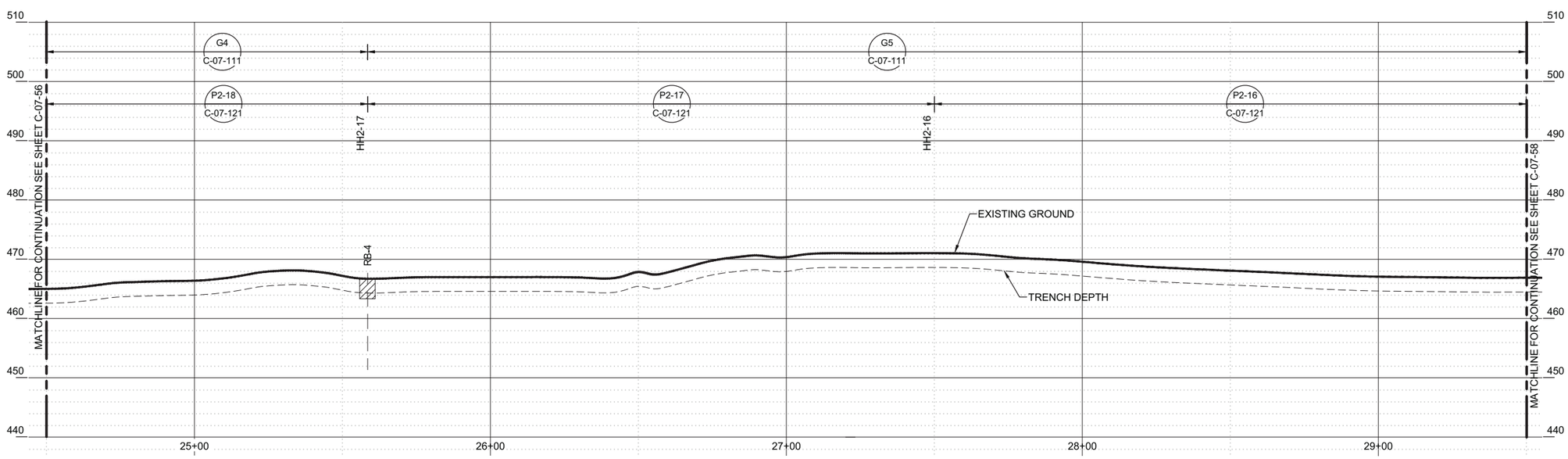

PIPELINE "G" - PROFILE

(SCALE: 1" = 20' H; 1" = 10' V)

- DRAFT -
NOT FOR
CONSTRUCTION

ETIC ENGINEERING

ARCADIS

NO.	DATE	DESCRIPTION	GM/SPEC	DWN	CHKD	SUPV	APVD BY
1	09/08/14	PRE-FINAL (90%) DESIGN		AJW	BAS	JPB	JEF
0	04/05/13	INTERMEDIATE (60%) DESIGN		AJW	KLD	JPB	JEF

REVISIONS

APPROVED BY	
JEF	SO
	SUPV JPB
	DSGN BAS
	DWN AJW
	CHKD JPB
	OK JEF
	DATE 09/08/14
	SCALES 1" = 20'

TOPOCK GROUNDWATER REMEDIATION PROJECT
PIPELINE - PLAN AND PROFILE
PIPELINE "G4" & "G5"
STA 24+50 TO STA 29+50
GAS TRANSMISSION & DISTRIBUTION
PACIFIC GAS AND ELECTRIC COMPANY
SAN FRANCISCO, CALIFORNIA

MICROFILM
BILL OF MATL
DWG LIST
SUPSDS
SUPSD BY
SHEET NO. of SHEETS
C-07-57
REV 1

08/27/2014, 14:57, G:\Graphics\ARI\TOPOCK-01\Post 90%\C-07-39 to 59_Plan&Profile.dwg, Tab: 57

N1808

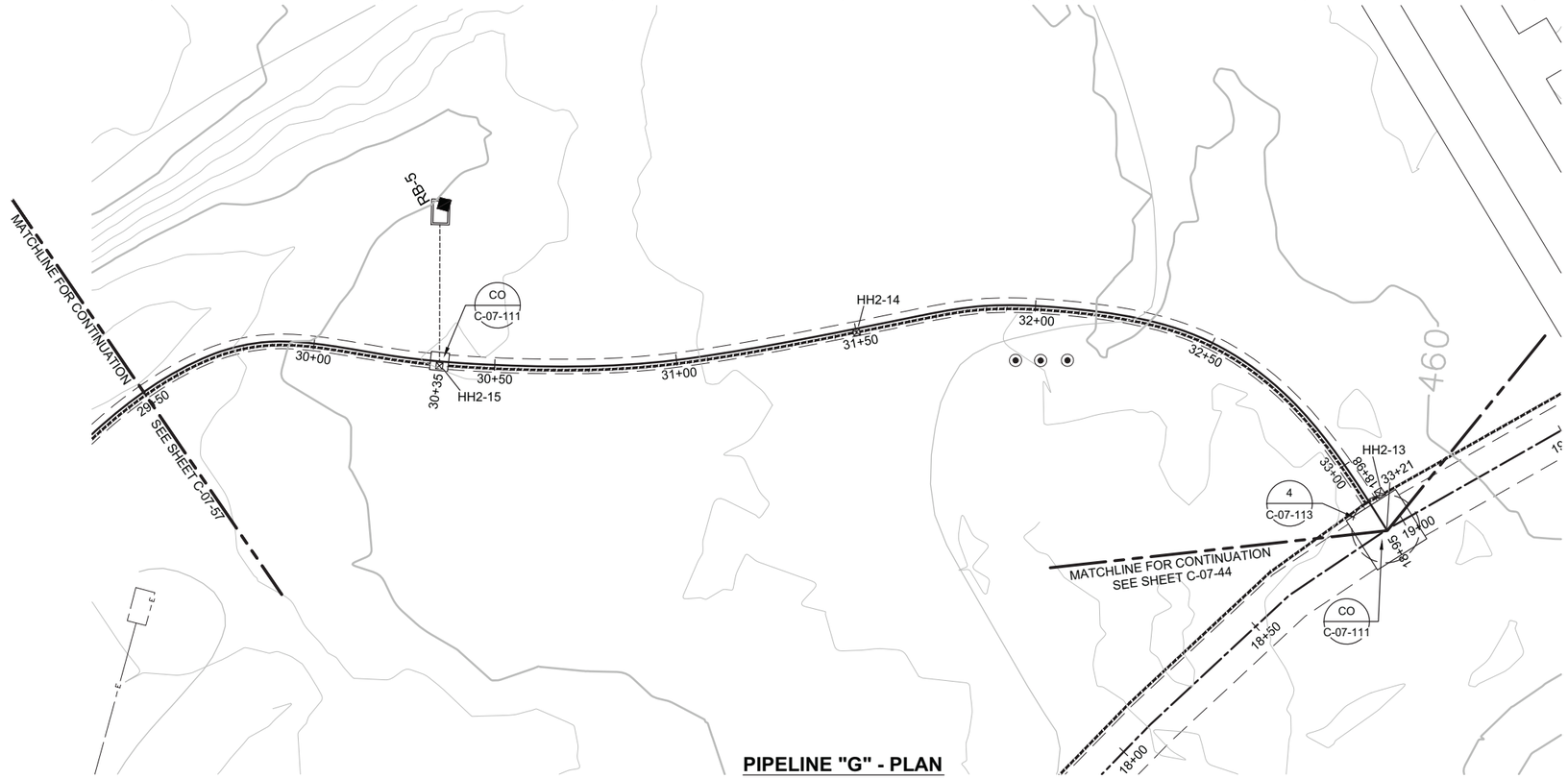

PIPELINE "G" - PLAN

(SCALE: 1" = 20')

NOTES

1. VAULT DETAILS SHOWN ON SHEETS M-X-X AND S-X-X.
2. SEE CONDUIT AND CABLE SCHEDULES AND SINGLE LINE DIAGRAMS ON SHEETS E-00-12 THRU E-00-20.
3. CLEANOUT LOCATIONS PROVIDE CLEANOUT PIPING FOR ALL INJECTION, EXTRACTION, BACKWASH, AND REMEDY-PRODUCED WATER LINES AT INDICATED LOCATIONS (SEE DETAIL C-07-111).

0 20 40 60
HORIZ: SCALE: 1"=20'

0 10 20 30
VERT: SCALE: 1"=10'

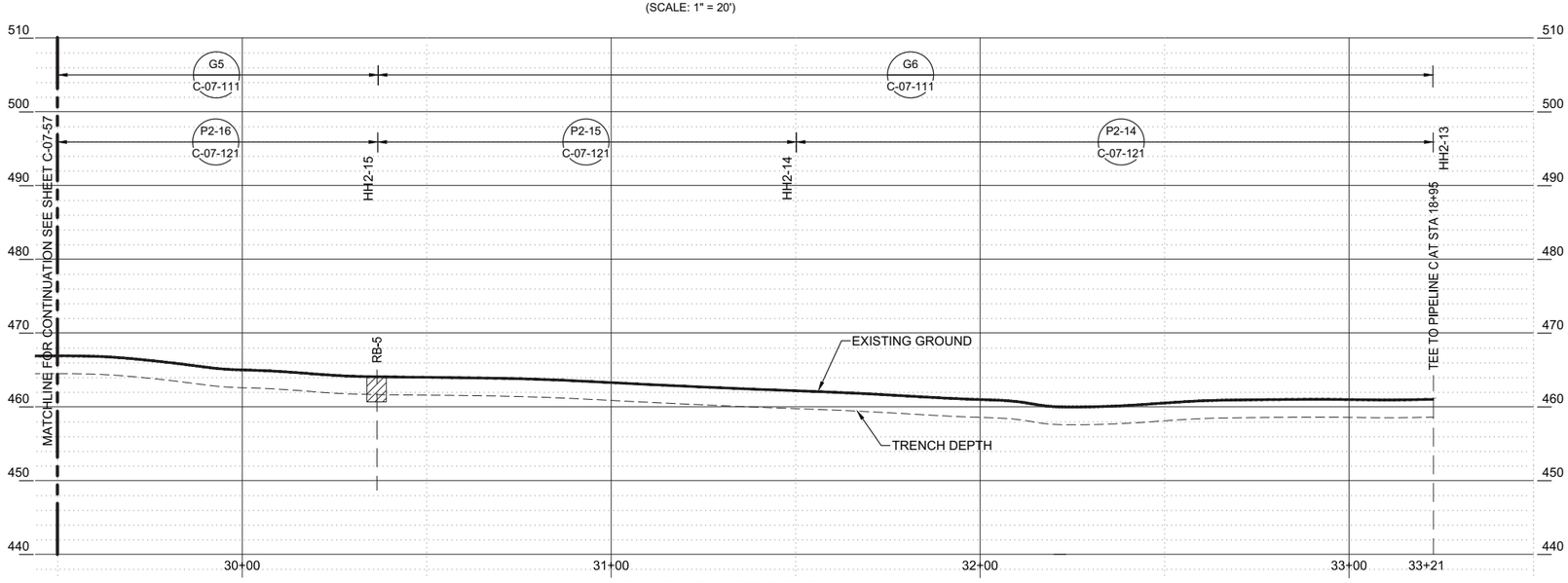

PIPELINE "G" - PROFILE

(SCALE: 1" = 20' H; 1" = 10' V)

- DRAFT -
NOT FOR
CONSTRUCTION

ETIC ENGINEERING

ARCADIS

NO.	DATE	DESCRIPTION	GM/SPEC	DWN	CHKD	SUPV	APVD BY
1	09/08/14	PRE-FINAL (90%) DESIGN		AJW	BAS	JPB	JEF
0	04/05/13	INTERMEDIATE (60%) DESIGN		AJW	KLD	JPB	JEF

REVISIONS

APPROVED BY		
JEF	SO	
	SUPV	JPB
	DSGN	BAS
	DWN	AJW
	CHKD	JPB
	OK	JEF
	DATE	09/08/14
	SCALES	1" = 20'

TOPOCK GROUNDWATER REMEDIATION PROJECT

PIPELINE - PLAN AND PROFILE
PIPELINE "G5" & "G6"
STA 29+50 TO STA 33+21

GAS TRANSMISSION & DISTRIBUTION
PACIFIC GAS AND ELECTRIC COMPANY
SAN FRANCISCO, CALIFORNIA

MICROFILM
BILL OF MATL
DWG LIST
SUPSDS
SUPSD BY
SHEET NO. of SHEETS
C-07-58
REV 1

08/27/2014, 14:57, G:\Graphics\ARI\TOPOCK-01\Post 90%\C-07-39 to 59_Plan&Profile.dwg, Tab: 58

N1808

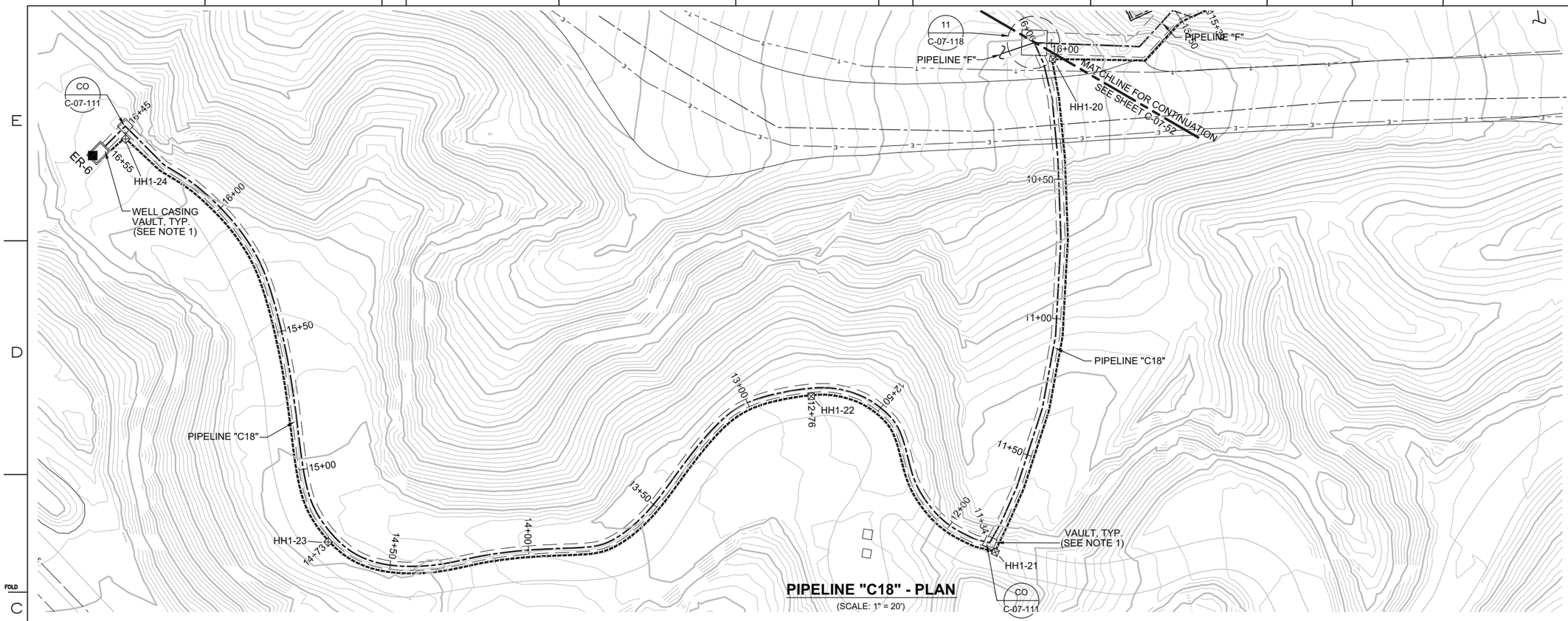

PIPELINE "C18" - PLAN

(SCALE: 1" = 20')

NOTES

1. VAULT DETAILS SHOWN ON SHEETS M-X-X AND S-X-X.
2. SEE CONDUIT AND CABLE SCHEDULES AND SINGLE LINE DIAGRAMS ON SHEETS E-00-12 THRU E-00-20.
3. CLEANOUT LOCATIONS PROVIDE CLEANOUT PIPING FOR ALL INJECTION, EXTRACTION, BACKWASH, AND REMEDY-PRODUCED WATER LINES AT INDICATED LOCATIONS (SEE DETAIL C-07-111).

0 20 40 60
HORIZ: SCALE: 1"=20'

0 10 20 30
VERT: SCALE: 1"=10'

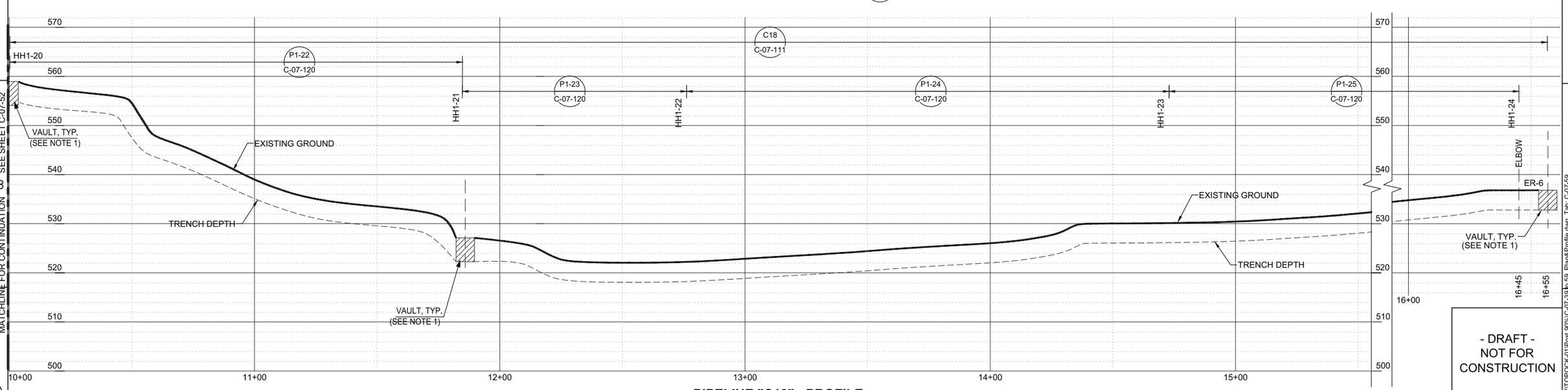

PIPELINE "C18" - PROFILE

(SCALE: 1" = 20' H; 1" = 10' V)

- DRAFT -
NOT FOR
CONSTRUCTION

ETIC ENGINEERING

ARCADIS

NO.	DATE	DESCRIPTION	GM/SPEC	DWN	CHKD	SUPV	APVD BY
1	09/08/14	PRE-FINAL (90%) DESIGN		AJW	BAS	JPB	JEF
0	04/05/13	INTERMEDIATE (60%) DESIGN		AJW	KLD	JPB	JEF

REVISIONS

APPROVED BY: JEF

SO	
SUPV	JPB
DSGN	BAS
DWN	AJW
CHKD	JPB
OK	JEF
DATE	09/08/14
SCALES	1" = 20'

TOPOCK GROUNDWATER REMEDIATION PROJECT

PIPELINE - PLAN AND PROFILE
PIPELINE "C18"
STA 10+00 TO STA 16+55

GAS TRANSMISSION & DISTRIBUTION
PACIFIC GAS AND ELECTRIC COMPANY
SAN FRANCISCO, CALIFORNIA

MICROFILM
BILL OF MATL
DWG LIST
SUPSDS
SUPSD BY
SHEET NO. of SHEETS: C-07-59
REV 1

09/27/2014, 14:57, G:\Graphics\ARI\TOPOCK-01\Post 90%\C-07-39 to 59_Plan&Profile.dwg, Tab: C-07-59

N1808

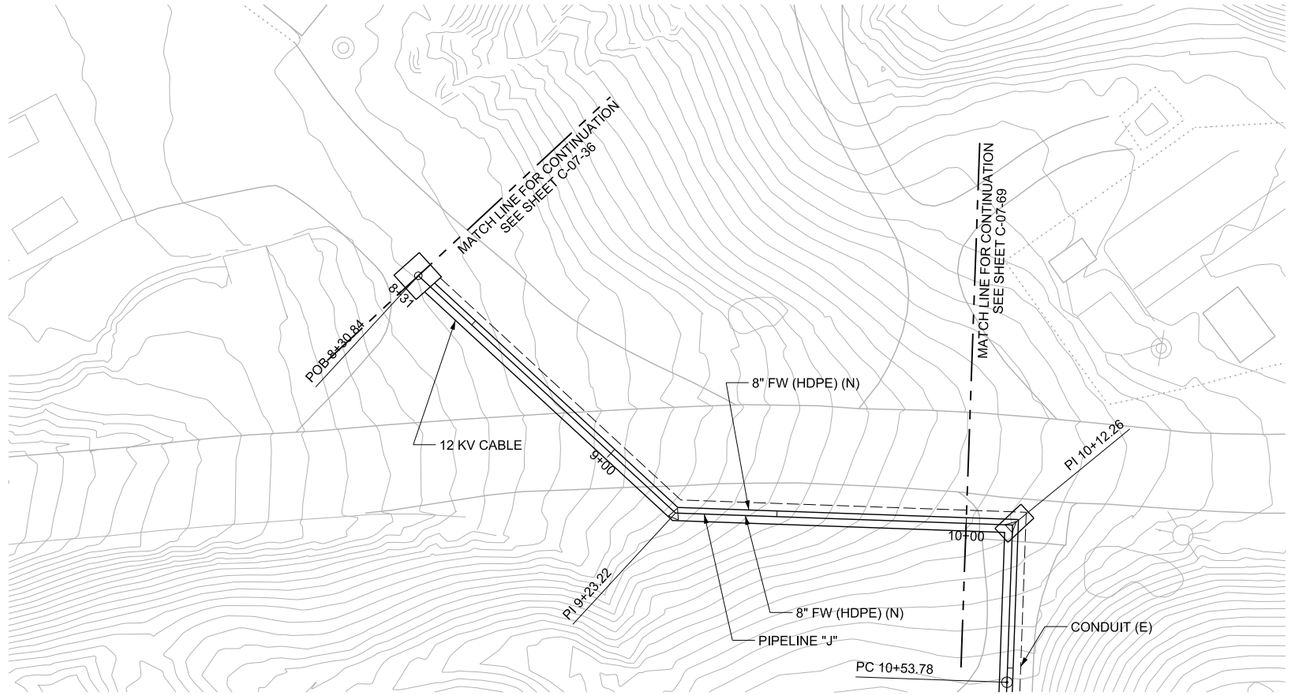

PIPELINE "J" - PLAN

(SCALE: 1" = 20')

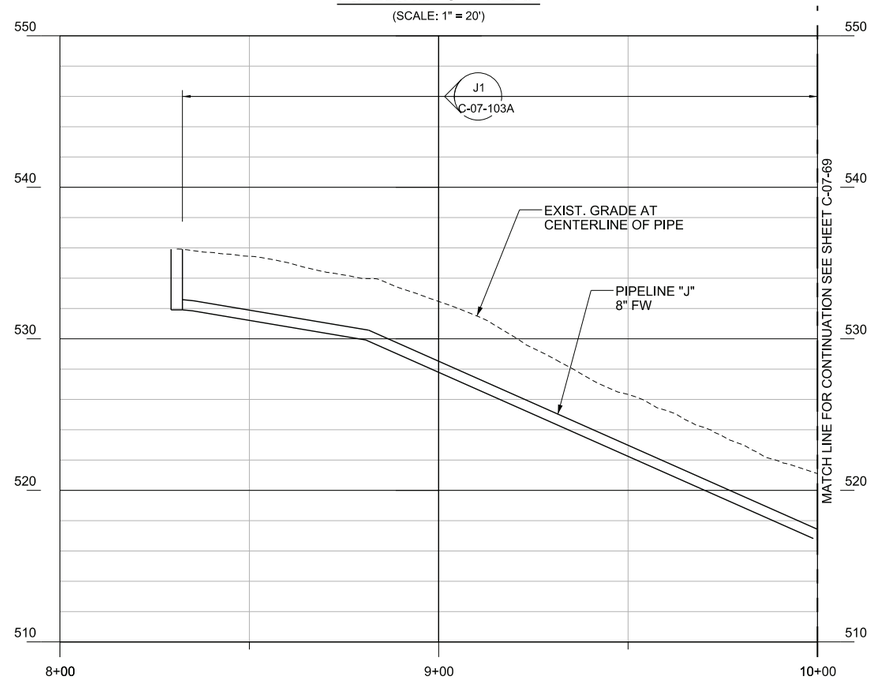

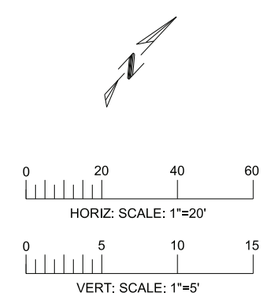

PIPELINE "J" - PROFILE

(SCALE: 1" = 20' H; 1" = 5' V)

- DRAFT -
NOT FOR CONSTRUCTION

AECOM
2101 WEBSTER STREET SUITE 1000
OAKLAND, CA 94612-3060

PROJECT NO. 60272335

NO.	DATE	DESCRIPTION	GM/SPEC	DWN	CHKD	SUPV	APVD BY
0	9/8/14	PRE-FINAL (90%) DESIGN					

REVISIONS

APPROVED BY		
	SO	XXXXX
	SUPV	PD
	DSGN	TL
	DWN	TL
	CHKD	JM
	OK	PD
	DATE	9/8/14
	SCALES	1" = 20'-0"

TOPOCK GROUNDWATER REMEDIATION PROJECT
PIPELINE - PLAN AND PROFILE
STA 8+31 TO STA 10+00
PIPELINE "J"
GAS TRANSMISSION & DISTRIBUTION
PACIFIC GAS AND ELECTRIC COMPANY
SAN FRANCISCO, CALIFORNIA

MICROFILM	
BILL OF MATL	
DWG LIST	
SUPSDS	
SUPSD BY	
SHEET NO. OF	SHEETS
C-07-68	REV 0

N1808

NOTES:

1. 12KV SPLICE BOX PER PG&E STANDARD 062000, HEAVY FULL TRAFFIC, 3'x4'X4'-6" INSIDE DIMENSIONS.
2. 480V HANDHOLE PER PG&E STANDARD 062000, HEAVY FULL TRAFFIC, 3'x5'x3'-6" INSIDE DIMENSIONS.

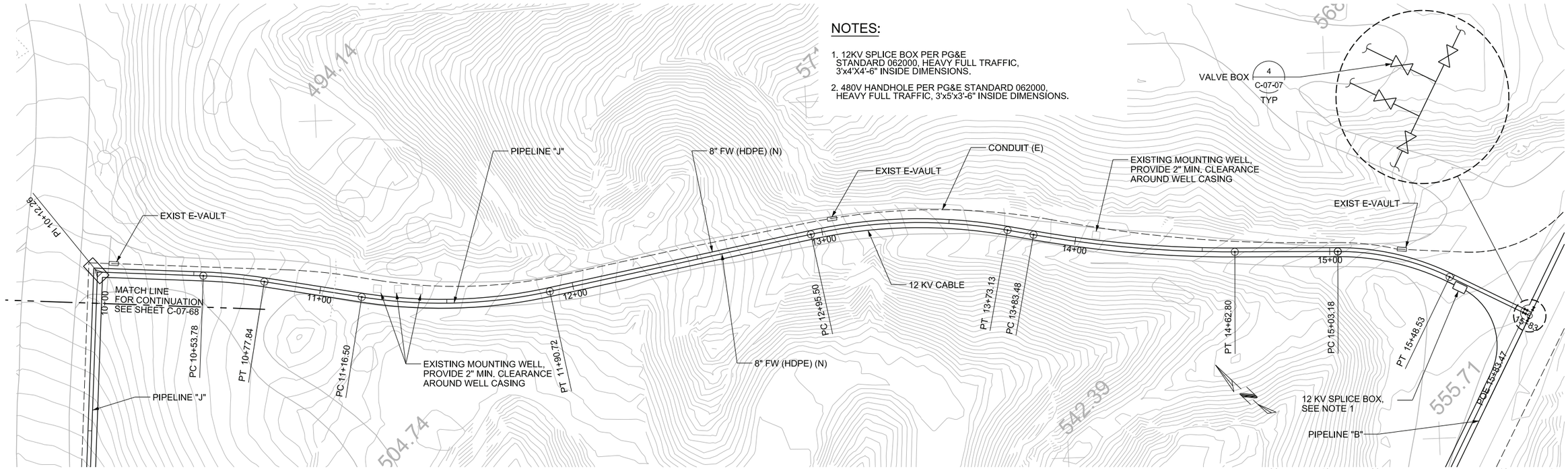

PIPELINE "J" - PLAN

(SCALE: 1" = 20')

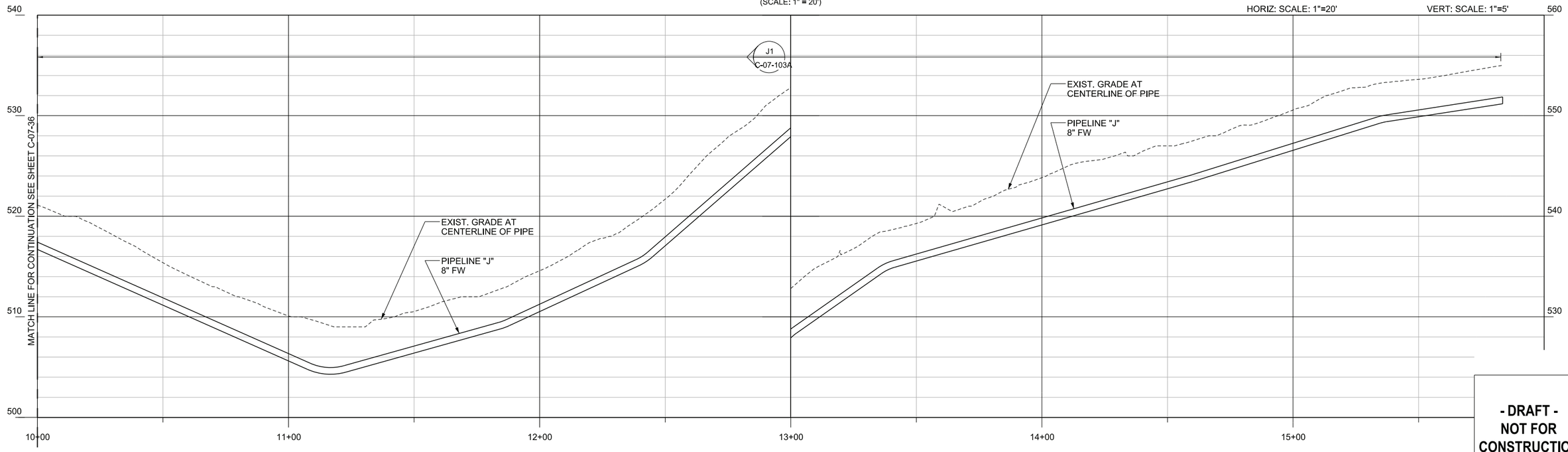

PIPELINE "J" - PROFILE

(SCALE: 1" = 20' H; 1" = 5' V)

- DRAFT - NOT FOR CONSTRUCTION

AECOM
2101 WEBSTER STREET SUITE 1000
OAKLAND, CA 94612-3060
PROJECT NO. 60272335

NO.	DATE	DESCRIPTION	GM/SPEC	DWN	CHKD	SUPV	APVD BY
1	9/8/14	PRE-FINAL (90%) DESIGN					
0	4/5/13	INTERMEDIATE (60%) DESIGN					

REVISIONS

APPROVED BY		
	SO	XXXXX
	SUPV	PD
	DSGN	GO
	DWN	LD
	CHKD	JM
	OK	PD
	DATE	9/8/14
	SCALES	1" = 20'-0"

TOPOCK GROUNDWATER REMEDIATION PROJECT
PLAN AND PROFILE
PIPELINE "J"
STA 10+04 TO STA 15+83
GAS TRANSMISSION & DISTRIBUTION
PACIFIC GAS AND ELECTRIC COMPANY
SAN FRANCISCO, CALIFORNIA

MICROFILM
BILL OF MATL
DWG LIST
SUPSDS
SUPSD BY
SHEET NO. OF SHEETS
C-07-69
REV 1

N1808

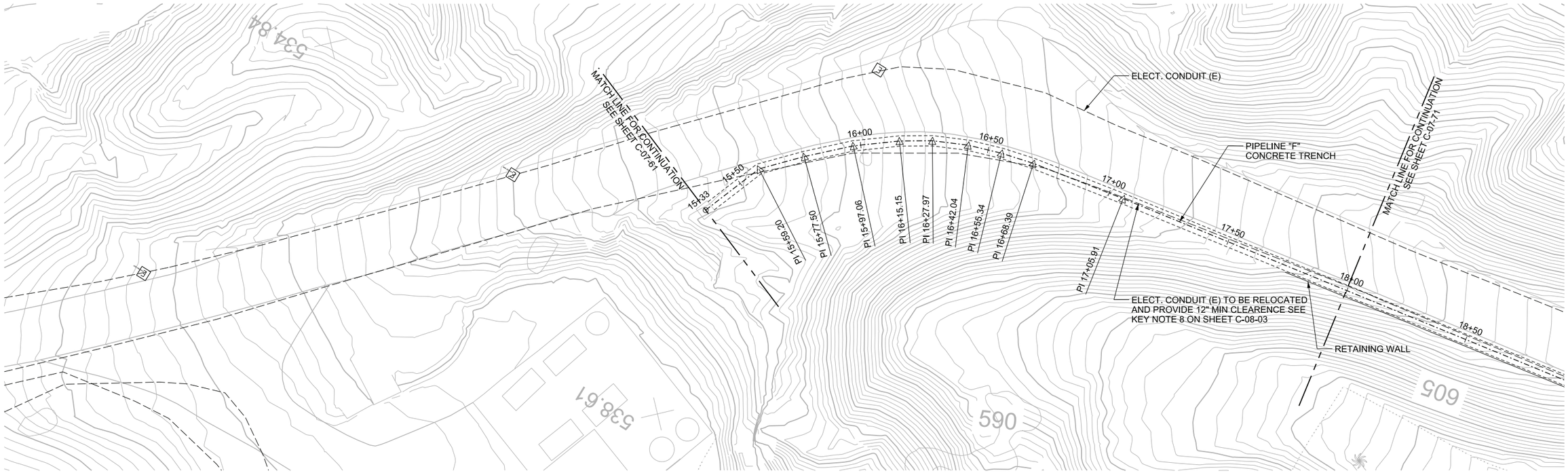

PIPELINE "F" - PLAN

(SCALE: 1" = 20')

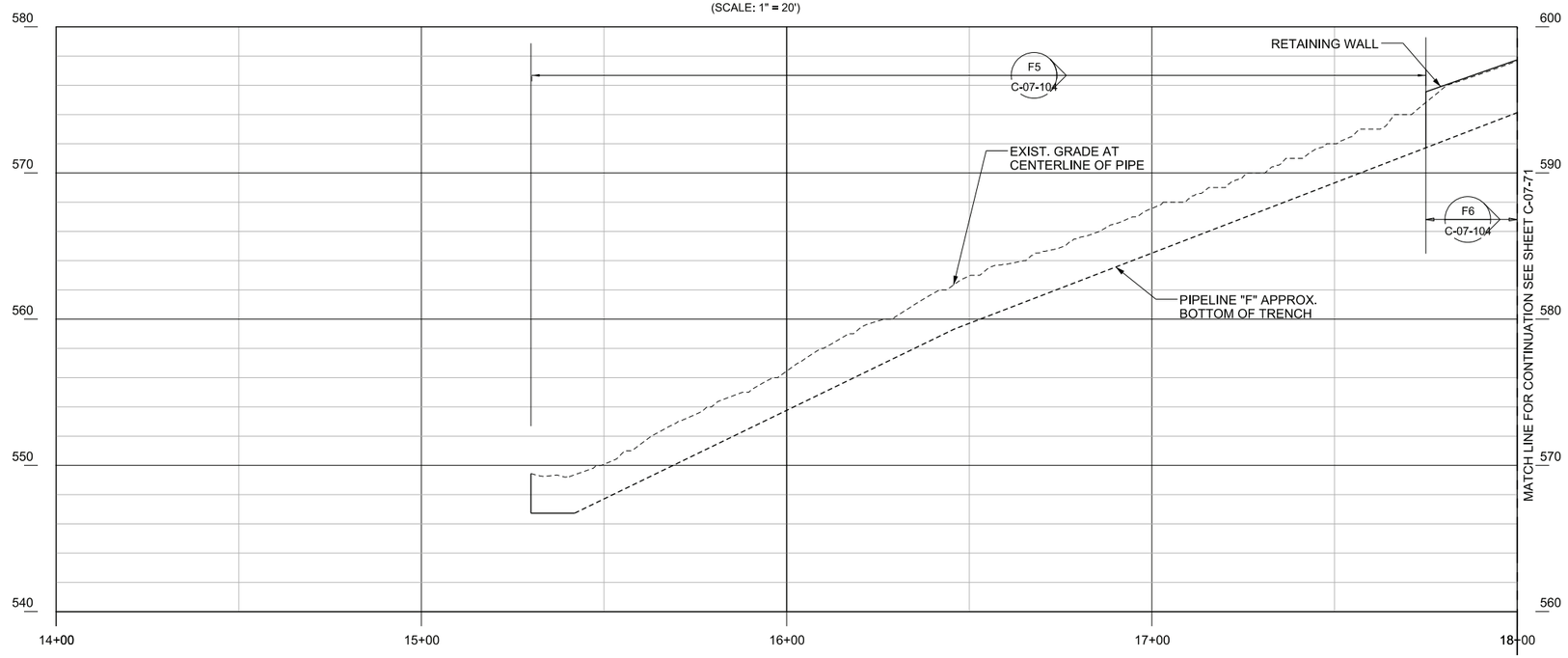

PIPELINE "F" - PROFILE

(SCALE: 1" = 20' H; 1" = 5' V)

0 20 40 60
HORIZ: SCALE: 1"=20'

0 5 10 15
VERT: SCALE: 1"=5'

- DRAFT - NOT FOR CONSTRUCTION

AECOM
2101 WEBSTER STREET SUITE 1000
OAKLAND, CA 94612-3060
PROJECT NO. 60272335

NO.	DATE	DESCRIPTION	GM/SPEC	DWN	CHKD	SUPV	APVD BY
1	9/8/14	PRE-FINAL (90%) DESIGN					
0	4/5/13	INTERMEDIATE (60%) DESIGN					

REVISIONS

APPROVED BY
SO XXXXX
SUPV PD
DSGN TL
DWN TL
CHKD JM
OK PD
DATE 9/8/14
SCALES 1" = 20'-0"

TOPOCK GROUNDWATER REMEDIATION PROJECT
PLAN AND PROFILE
PIPELINE "F"
STA 15+30 TO STA 18+00
GAS TRANSMISSION & DISTRIBUTION
PACIFIC GAS AND ELECTRIC COMPANY
SAN FRANCISCO, CALIFORNIA

MICROFILM
BILL OF MATL
DWG LIST
SUPSDS
SUPSD BY
SHEET NO. OF SHEETS
C-07-70
REV 1

N1808

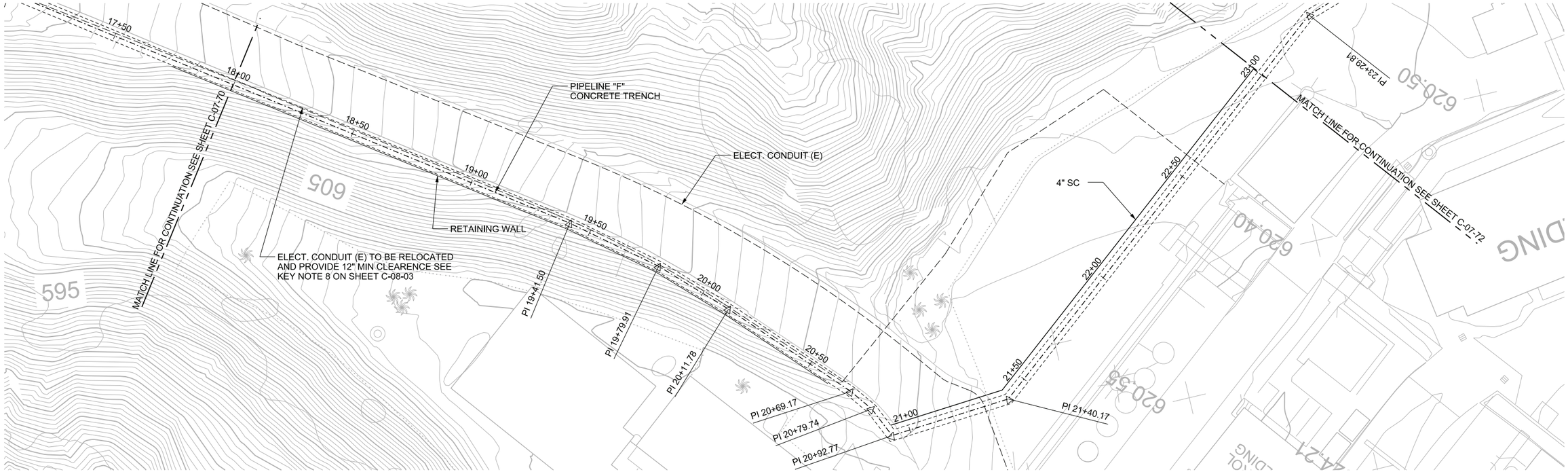

PIPELINE "F" - PLAN

(SCALE: 1" = 20')

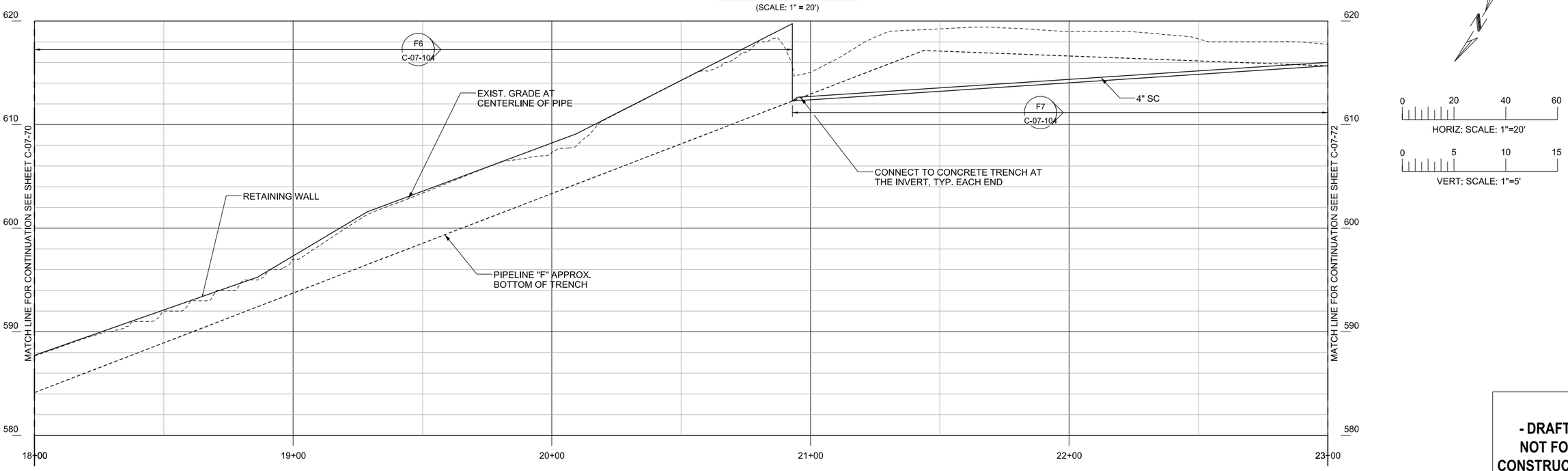

PIPELINE "F" - PROFILE

(SCALE: 1" = 20' H; 1" = 5' V)

0 20 40 60
HORIZ: SCALE: 1"=20'

0 5 10 15
VERT: SCALE: 1"=5'

- DRAFT -
NOT FOR CONSTRUCTION

AECOM
2101 WEBSTER STREET SUITE 1000
OAKLAND, CA 94612-3060

PROJECT NO. 60272335

NO.	DATE	DESCRIPTION	GM/SPEC	DWN	CHKD	SUPV	APVD BY
1	9/8/14	PRE-FINAL (90%) DESIGN					
0	4/5/13	INTERMEDIATE (60%) DESIGN					

REVISIONS

APPROVED BY	
SO	XXXXX
SUPV	PD
DSGN	GO
DWN	LD
CHKD	JM
OK	PD
DATE	9/8/14
SCALES	1" = 20'-0

TOPOCK GROUNDWATER REMEDIATION PROJECT
PLAN AND PROFILE
PIPELINE "F"
STA 18+00 TO STA 23+00
GAS TRANSMISSION & DISTRIBUTION
PACIFIC GAS AND ELECTRIC COMPANY
SAN FRANCISCO, CALIFORNIA

MICROFILM
BILL OF MATL
DWG LIST
SUPSDS
SUPSD BY
SHEET NO. OF SHEETS
C-07-71 REV 1

N1808

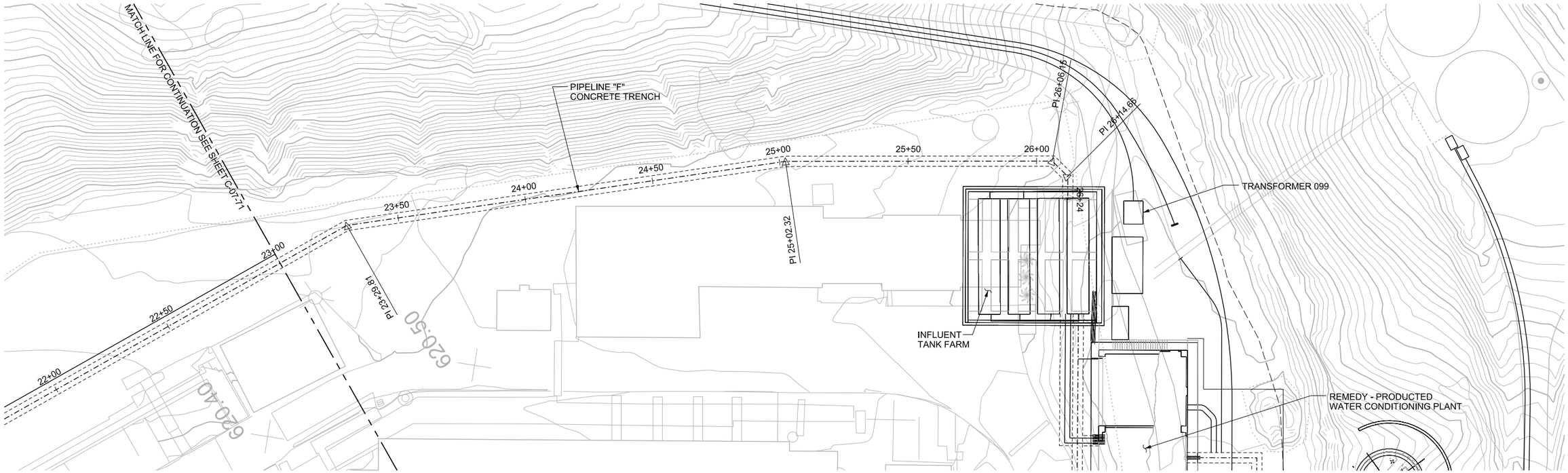

PIPELINE "F" - PLAN

(SCALE: 1" = 20')

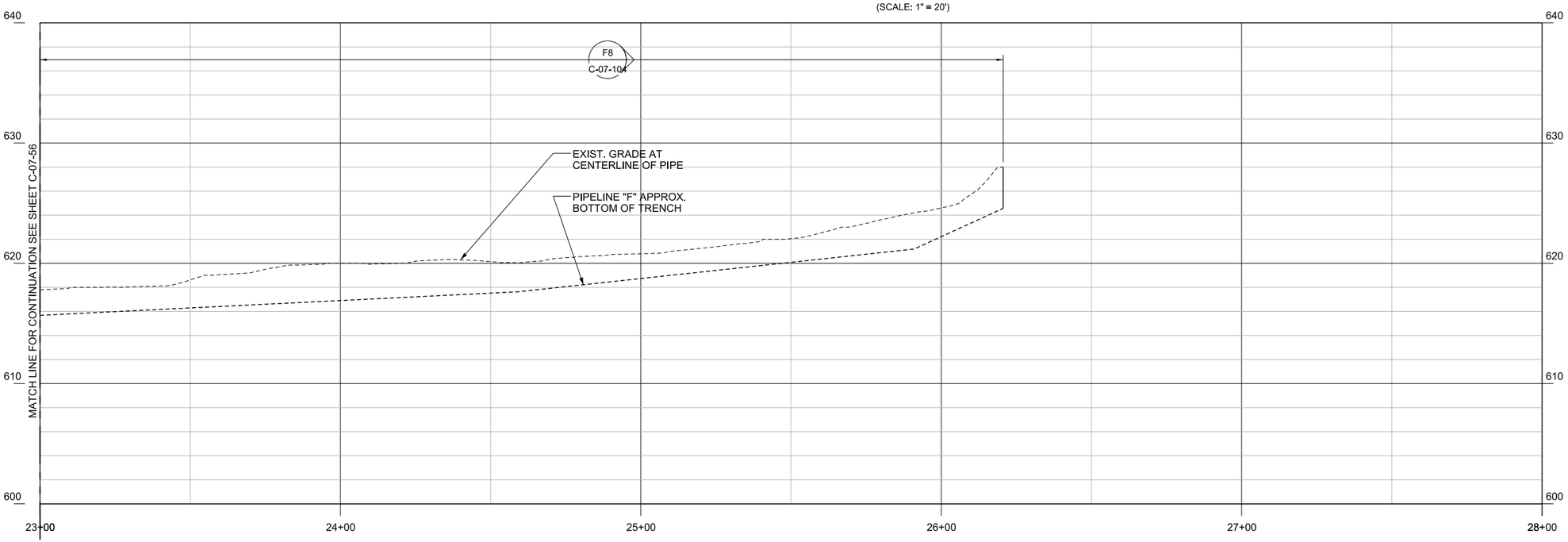

0 20 40 60
HORIZ: SCALE: 1"=20'

0 5 10 15
VERT: SCALE: 1"=5'

PIPELINE "F" - PROFILE

(SCALE: 1" = 20' H; 1" = 5' V)

- DRAFT -
NOT FOR CONSTRUCTION

AECOM
2101 WEBSTER STREET SUITE 1000
OAKLAND, CA 94612-3060

PROJECT NO. 60272335

NO.	DATE	DESCRIPTION	GM/SPEC	DWN	CHKD	SUPV	APVD BY
1	9/8/14	PRE-FINAL (90%) DESIGN					
0	4/5/13	INTERMEDIATE (60%) DESIGN					

REVISIONS

APPROVED BY		
	SO	XXXXX
	SUPV	PD
	DSGN	TL
	DWN	TL
	CHKD	JM
	OK	PD
	DATE	9/8/14
	SCALES	1" = 20'-0"

TOPOCK GROUNDWATER REMEDIATION PROJECT
PLAN AND PROFILE
PIPELINE "F"
STA 23+00 TO STA 26+25
GAS TRANSMISSION & DISTRIBUTION
PACIFIC GAS AND ELECTRIC COMPANY
SAN FRANCISCO, CALIFORNIA

MICROFILM	
BILL OF MATL	
DWG LIST	
SUPSDS	
SUPSD BY	
SHEET NO. OF	SHEETS
C-07-72	REV 1

N1808

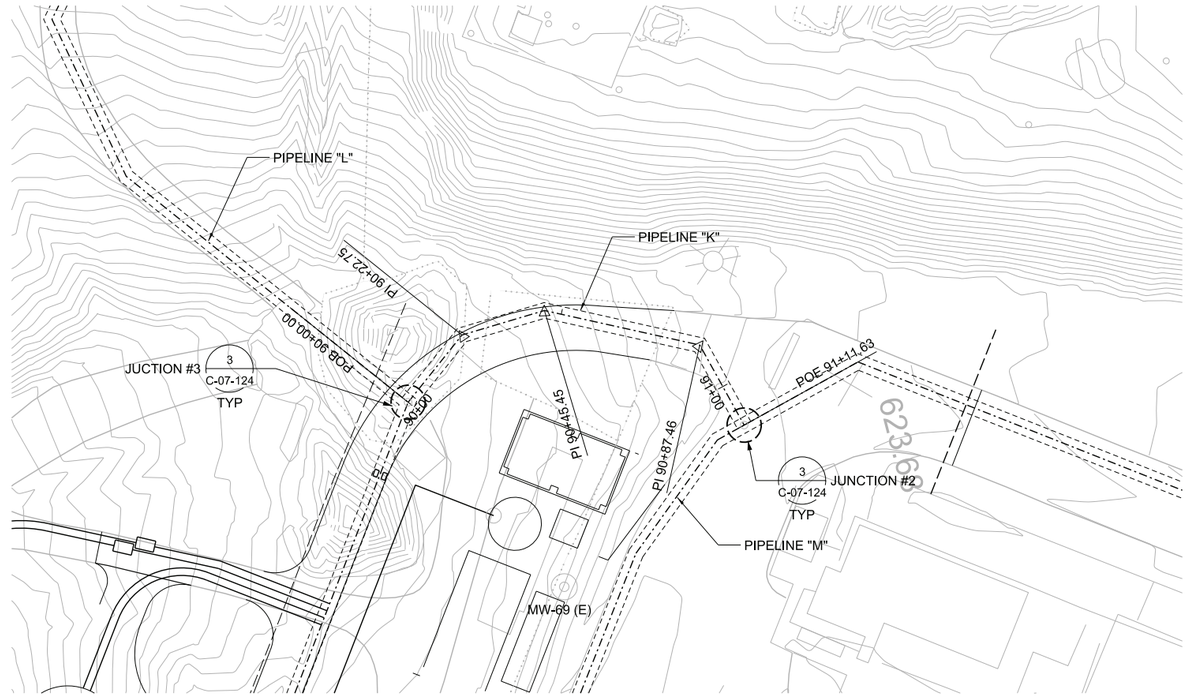

PIPELINE "K" - PLAN

(SCALE: 1" = 20')

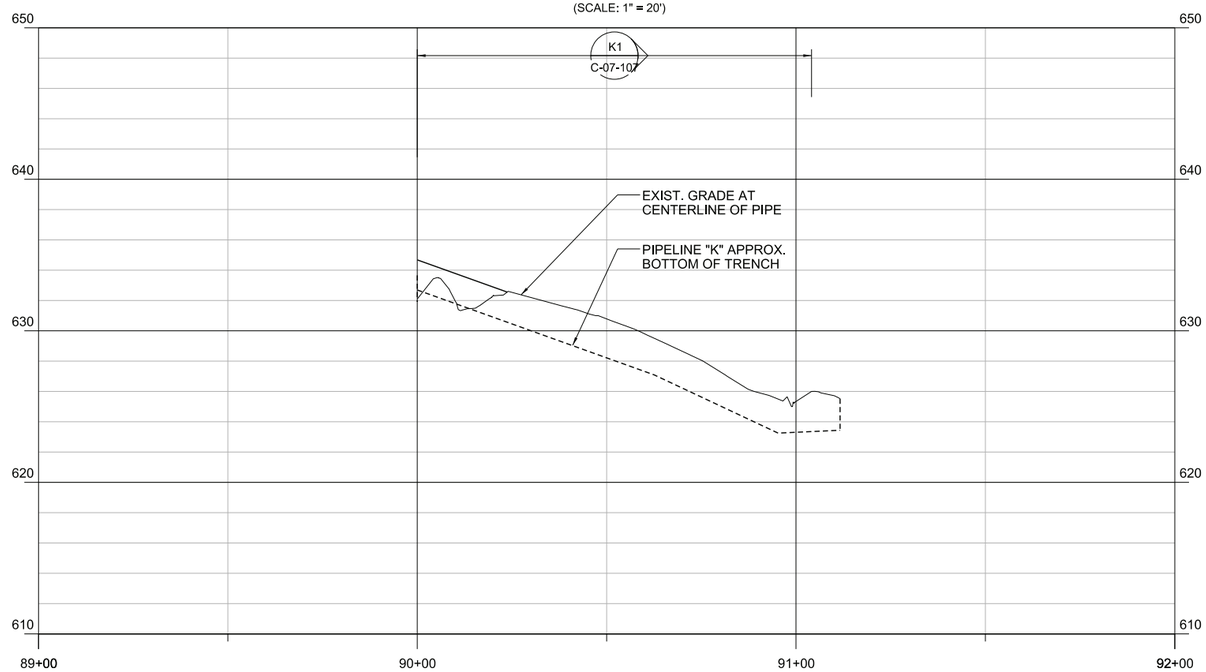

PIPELINE "K" - PROFILE

(SCALE: 1" = 20' H; 1" = 5' V)

0 20 40 60
HORIZ: SCALE: 1"=20'

0 5 10 15
VERT: SCALE: 1"=5'

- DRAFT -
NOT FOR CONSTRUCTION

AECOM
2101 WEBSTER STREET SUITE 1000
OAKLAND, CA 94612-3060
PROJECT NO. 60272335

NO.	DATE	DESCRIPTION	GM/SPEC	DWN	CHKD	SUPV	APVD BY
1	9/8/14	PRE-FINAL (90%) DESIGN					
0	4/5/13	INTERMEDIATE (60%) DESIGN					

REVISIONS

APPROVED BY

SO	XXXXX
SUPV	PD
DSGN	TL
DWN	TL
CHKD	JM
OK	PD
DATE	9/8/14
SCALES	1" = 20'-0"

TOPOCK GROUNDWATER REMEDIATION PROJECT
PLAN AND PROFILE
PIPELINE "K"
STA 90+00 TO STA 91+11
GAS TRANSMISSION & DISTRIBUTION
PACIFIC GAS AND ELECTRIC COMPANY
SAN FRANCISCO, CALIFORNIA

MICROFILM
BILL OF MATL
DWG LIST
SUPSDS
SUPSD BY
SHEET NO. OF SHEETS
C-07-73
REV 1

N1808

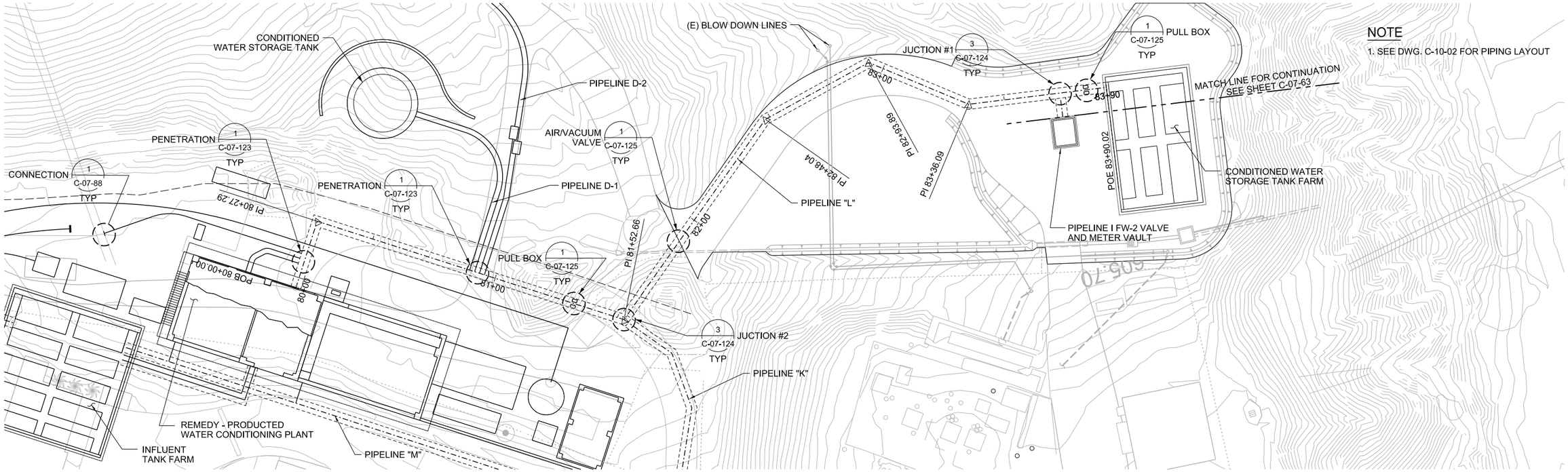

PIPELINE "L" - PLAN

(SCALE: 1" = 20')

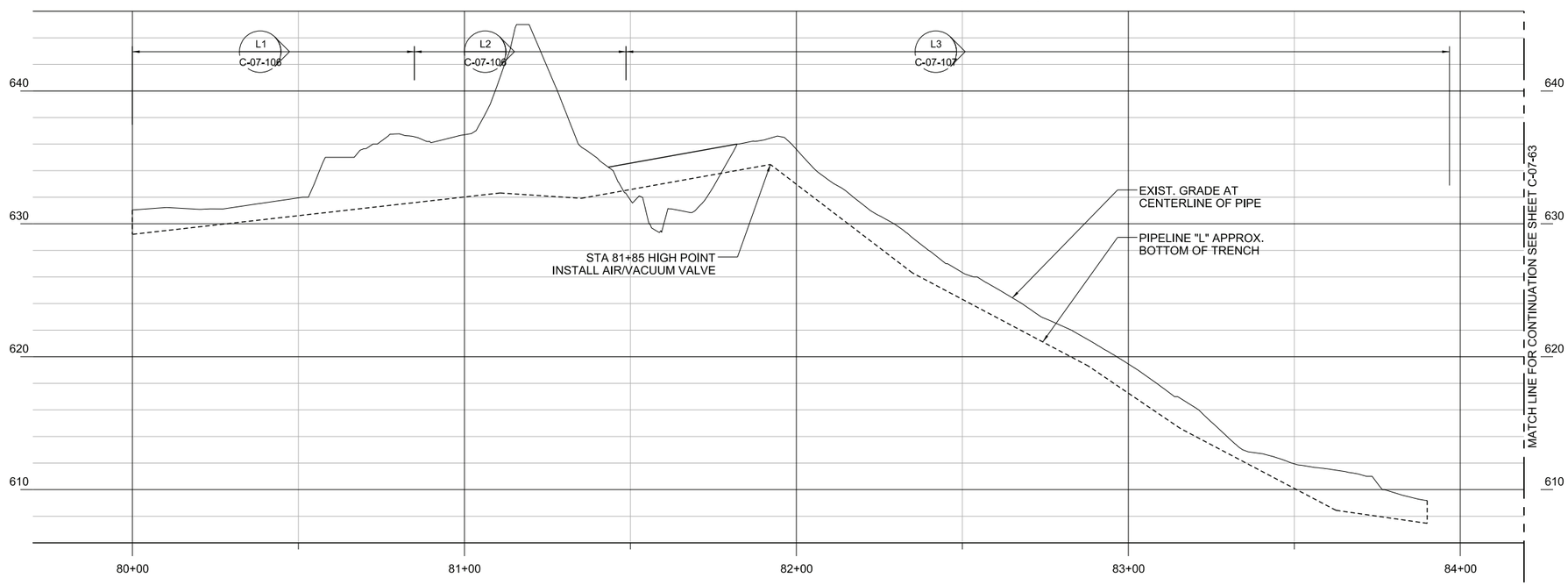

PIPELINE "L" - PROFILE

(SCALE: 1" = 20' H; 1" = 5' V)

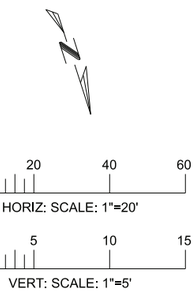

- DRAFT - NOT FOR CONSTRUCTION

AECOM
2101 WEBSTER STREET SUITE 1000
OAKLAND, CA 94612-3060
PROJECT NO. 60272335

NO.	DATE	DESCRIPTION	GM/SPEC	DWN	CHKD	SUPV	APVD BY
1	9/8/14	PRE-FINAL (90%) DESIGN					
0	4/5/13	INTERMEDIATE (60%) DESIGN					

REVISIONS

APPROVED BY		
SO	XXXXX	
SUPV	PD	
DSGN	TL	
DWN	TL	
CHKD	JM	
OK	PD	
DATE	9/8/14	
SCALES	1" = 20'-0"	

TOPOCK GROUNDWATER REMEDIATION PROJECT
PLAN AND PROFILE
PIPELINE "L"
STA 80+00 TO STA 83+90
GAS TRANSMISSION & DISTRIBUTION
PACIFIC GAS AND ELECTRIC COMPANY
SAN FRANCISCO, CALIFORNIA

MICROFILM
BILL OF MATL
DWG LIST
SUPSDS
SUPSD BY
SHEET NO. OF SHEETS
C-07-74
REV 1

N1808

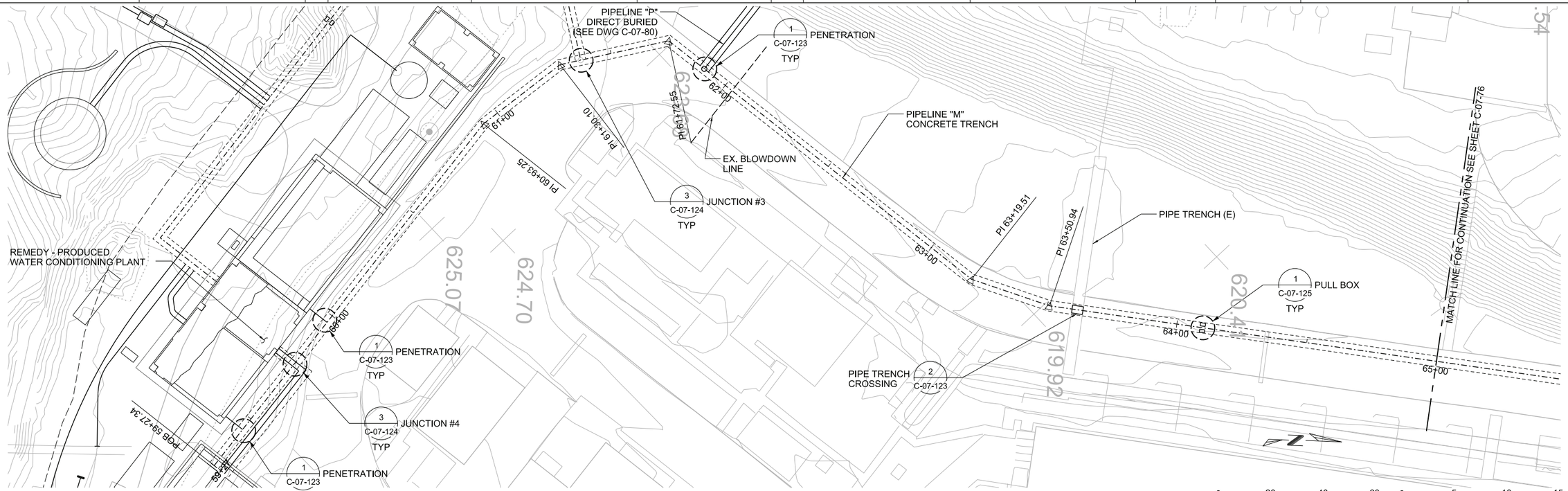

PIPELINE "M" - PLAN

(SCALE: 1" = 20')

HORIZ: SCALE: 1"=20' VERT: SCALE: 1"=5'

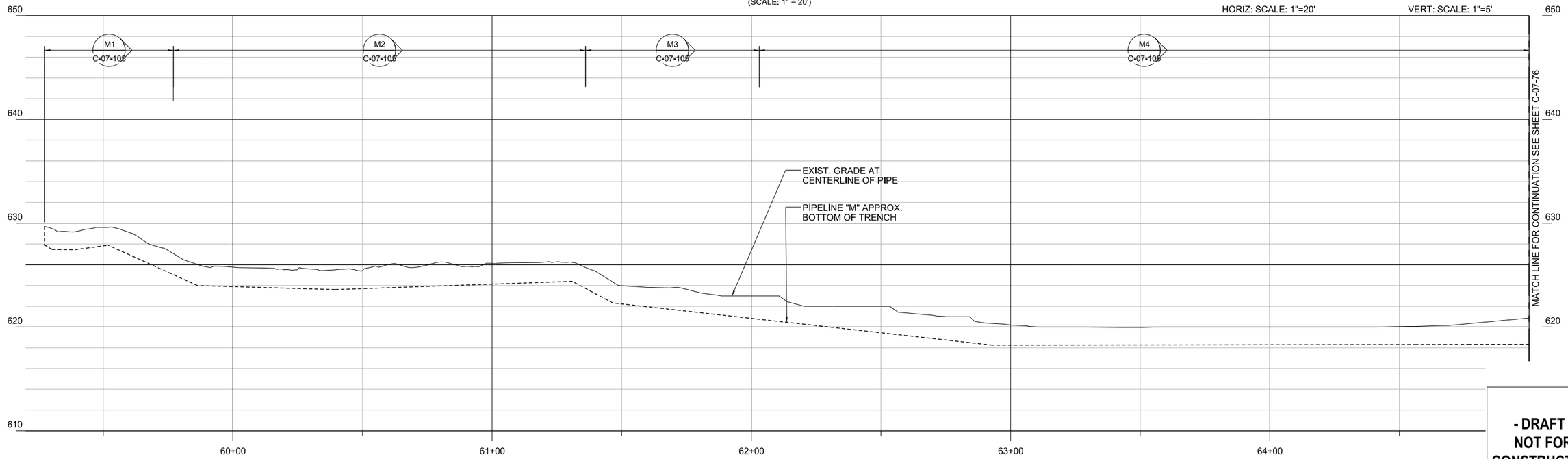

PIPELINE "M" - PROFILE

(SCALE: 1" = 20' H; 1" = 5' V)

- DRAFT -
NOT FOR CONSTRUCTION

AECOM
2101 WEBSTER STREET SUITE 1000
OAKLAND, CA 94612-3060
PROJECT NO. 60272335

NO.	DATE	DESCRIPTION	GM/SPEC	DWN	CHKD	SUPV	APVD BY
1	9/8/14	PRE-FINAL (90%) DESIGN					
0	4/5/13	INTERMEDIATE (60%) DESIGN					

REVISIONS

APPROVED BY		
	SO	XXXXX
	SUPV	PD
	DSGN	TL
	DWN	TL
	CHKD	JM
	OK	PD
	DATE	9/8/14
	SCALES	1" = 20'-0"

TOPOCK GROUNDWATER REMEDIATION PROJECT
PLAN AND PROFILE
PIPELINE "M"
STA 60+00 TO STA 65+00
GAS TRANSMISSION & DISTRIBUTION
PACIFIC GAS AND ELECTRIC COMPANY
SAN FRANCISCO, CALIFORNIA

MICROFILM
BILL OF MATL
DWG LIST
SUPSDS
SUPSD BY
SHEET NO. OF SHEETS
C-07-75
REV 1

N1808

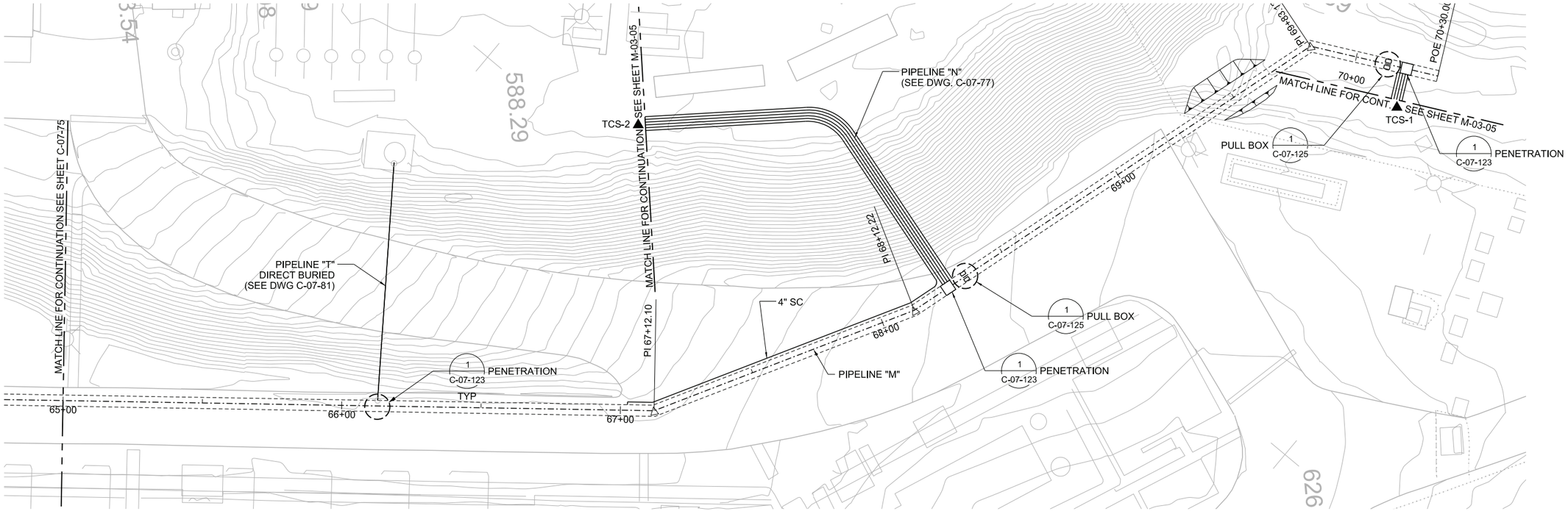

PIPELINE "M" - PLAN

(SCALE: 1" = 20')

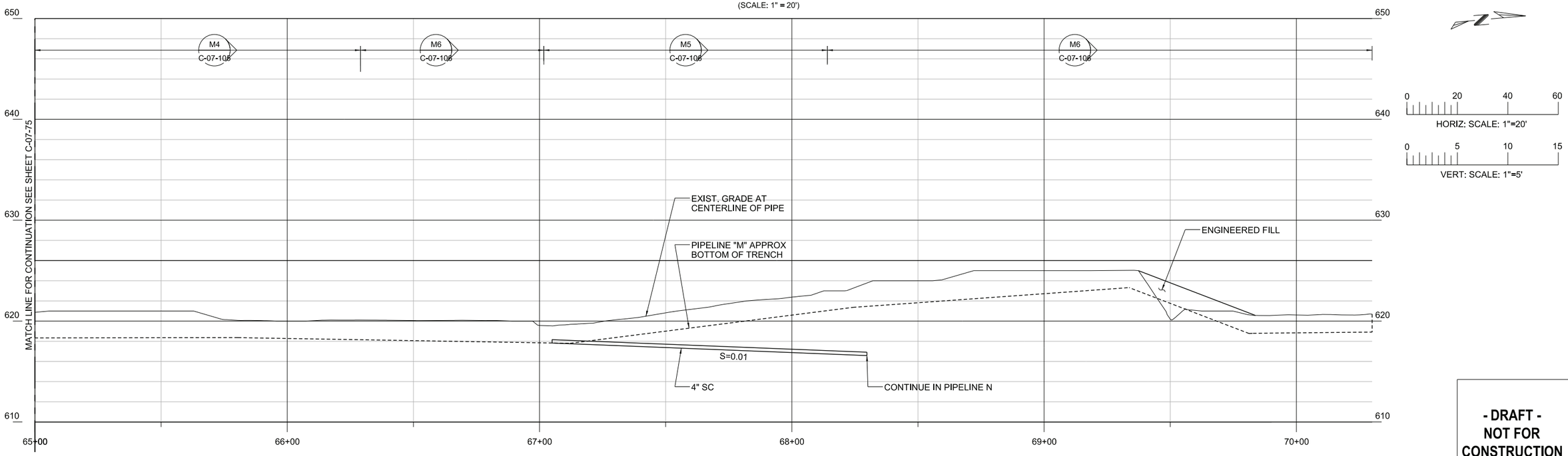

PIPELINE "M" - PROFILE

(SCALE: 1" = 20' H; 1" = 5' V)

- DRAFT -
NOT FOR CONSTRUCTION

AECOM
2101 WEBSTER STREET SUITE 1000
OAKLAND, CA 94612-3060
PROJECT NO. 60272335

NO.	DATE	DESCRIPTION	GM/SPEC	DWN	CHKD	SUPV	APVD BY
1	9/8/14	PRE-FINAL (90%) DESIGN					
0	4/5/13	INTERMEDIATE (60%) DESIGN					

REVISIONS

APPROVED BY

SO	XXXXX
SUPV	PD
DSGN	GO
DWN	LD
CHKD	JM
OK	PD
DATE	9/8/14
SCALES	1" = 20'-0"

TOPOCK GROUNDWATER REMEDIATION PROJECT
PLAN AND PROFILE
PIPELINE "M"
STA 65+00 TO STA 70+30
GAS TRANSMISSION & DISTRIBUTION
PACIFIC GAS AND ELECTRIC COMPANY
SAN FRANCISCO, CALIFORNIA

MICROFILM
BILL OF MATL
DWG LIST
SUPSDS
SUPSD BY
SHEET NO. OF SHEETS
C-07-76
REV 1

N1808

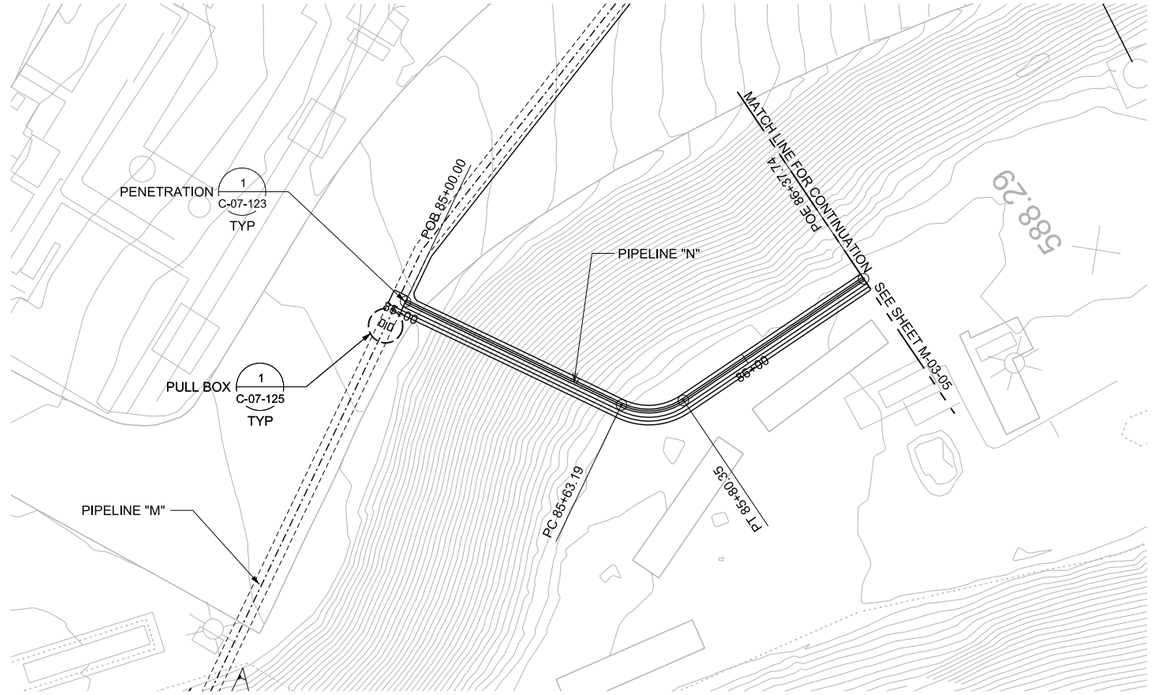

PIPELINE "N" - PLAN

(SCALE: 1" = 20')

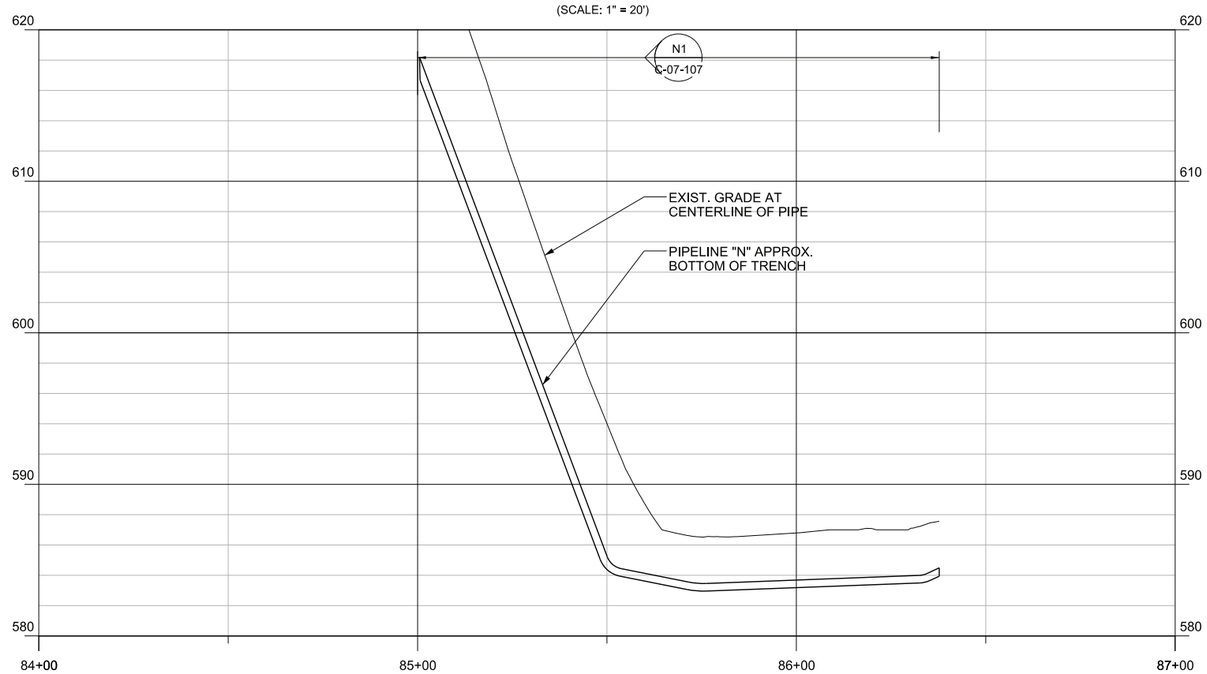

PIPELINE "N" - PROFILE

(SCALE: 1" = 20' H; 1" = 5' V)

HORIZ: SCALE: 1"=20'

VERT: SCALE: 1"=5'

- DRAFT - NOT FOR CONSTRUCTION

AECOM

2101 WEBSTER STREET SUITE 1000
OAKLAND, CA 94612-3060

PROJECT NO. 60272335

NO.	DATE	DESCRIPTION	GM/SPEC	DWN	CHKD	SUPV	APVD BY
1	9/8/14	PRE-FINAL (90%) DESIGN					
0	4/5/30	INTERMEDIATE (60%) DESIGN					

REVISIONS

APPROVED BY	
SO	XXXXX
SUPV	PD
DSGN	TL
DWN	TL
CHKD	JM
OK	PD
DATE	9/8/14
SCALES	1" = 20'-0"

TOPOCK GROUNDWATER REMEDIATION PROJECT

PLAN AND PROFILE
PIPELINE "N"
STA 85+00 TO STA 86+38

GAS TRANSMISSION & DISTRIBUTION

PACIFIC GAS AND ELECTRIC COMPANY
SAN FRANCISCO, CALIFORNIA

MICROFILM
BILL OF MATL
DWG LIST
SUPSDS
SUPSD BY

SHEET NO. OF SHEETS

C-07-77

REV 1

N1808

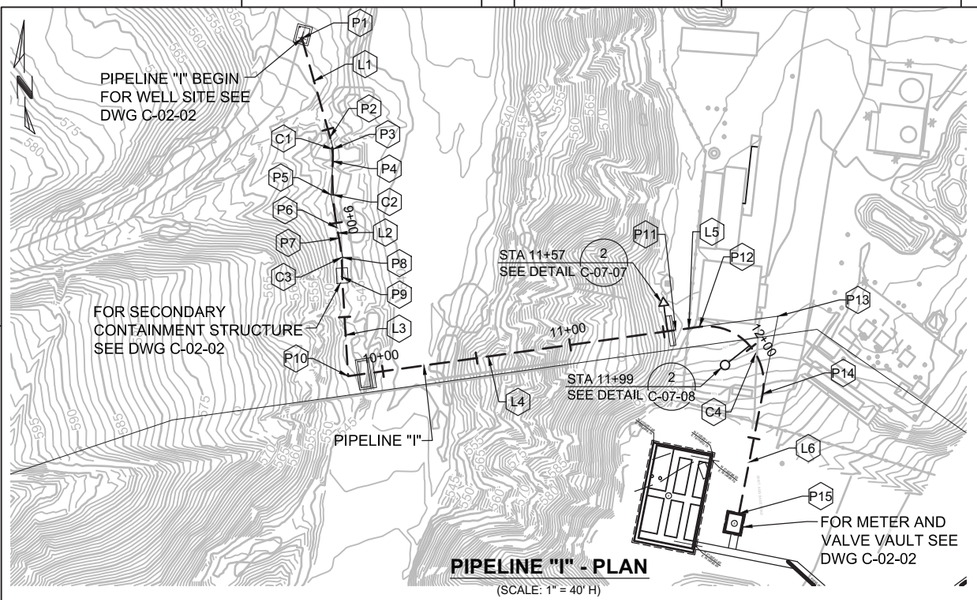

PIPELINE "I" - PLAN

(SCALE: 1" = 40' H)

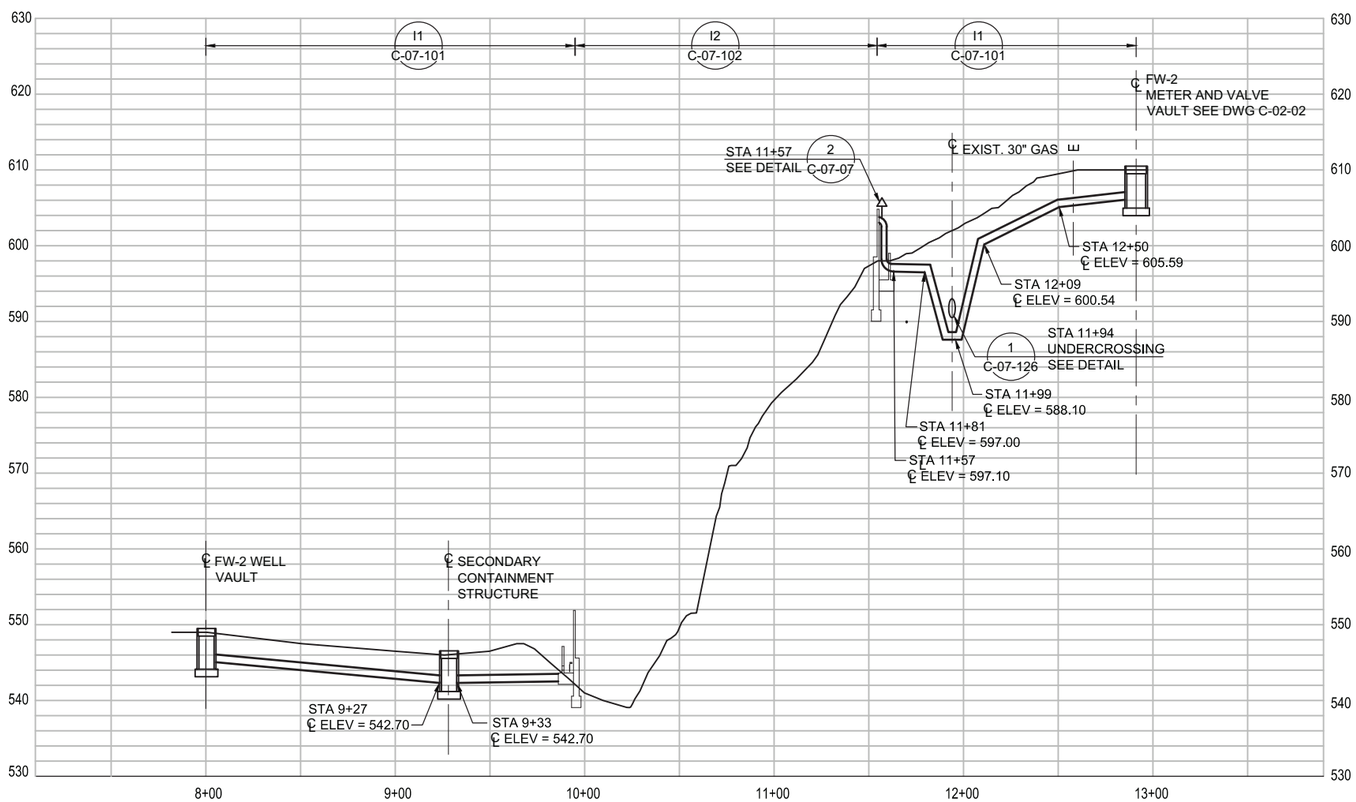

PIPELINE "I" - PROFILE

(SCALE: 1" = 40' H; 1" = 4' V)

NOTES:

1. DEPTHS OF EXISTING UTILITIES ARE UNKNOWN. ALL POTENTIAL CONFLICTS BETWEEN NEW PIPE CONSTRUCTION AND EXISTING UTILITIES WILL BE POTHOLED PRIOR TO THE 100% DESIGN. A DETERMINATION WILL BE MADE WHETHER TO RELOCATE EXISTING UTILITIES OR RE-ROUTE NEW PIPE TRENCHES AROUND EXISTING UTILITIES. THIS WILL BE INCORPORATED INTO THE 100% DESIGN.
2. THE NEW PIPELINE ALIGNMENT SHOWS CENTER OF TRENCH. THE NUMBER AND SIZES OF PIPE IN EACH TRENCH VARIES. REFER TO PIPE SECTION NUMBER ON EACH PLAN AND PROFILE SHEET AND PIPE SCHEDULE ON DRAWING C-07-03 FOR NUMBER AND SIZE OF EACH PIPE. REFER TO TRENCH DETAILS ON DRAWINGS C-100, C-101 AND C-102 FOR ARRANGEMENT OF PIPING IN EACH TRENCH SECTION.

Point Table

Point	Description	Sta	Northing	Easting
P1	Well	8+00.00	2100511.51	7614682.70
P2	BC	8+54.39	2100459.25	7614697.61
P3	PI	8+60.89	2100453.01	7614699.39
P4	EC, BC	8+67.38	2100446.52	7614699.05
P5	PI	8+85.22	2100428.76	7614698.10
P6	EC	9+02.90	2100411.31	7614701.33
P7	BC	9+08.48	2100405.83	7614702.35
P8	PI	9+18.82	2100395.66	7614704.24
P9	EC	9+29.14	2100385.33	7614704.72
P10	PI	9+81.71	2100332.82	7614707.15
P11	VPI	11+56.73	2100357.17	7614880.46
P12	BC	11+69.48	2100358.95	7614893.08
P13	PI	12+11.41	2100364.54	7614934.65
P14	EC	12+26.48	2100323.40	7614926.52
P15	Meter Vault	12+91.01	2100260.10	7614914.00

Line Table

Line	Beg Point	End Point	Distance	Bearing
L1	P1	P2	54.39	S 15° 55' 25" E
L2	P6	P7	5.58	S 10° 32' 38" E
L3	P9	P10	52.57	S 02° 38' 58" E
L4	P10	P11	175.02	N 82° 00' 08" E
L5	P11	P12	12.75	N 82° 00' 08" E
L6	P14	P15	64.53	S 11° 11' 17" W

Curve Table

Curve	Beg Point	End Point	Distance	Δ	Radius	Tangent
C1	P2	P4	12.99	04° 57' 43"	150.00	6.50
C2	P4	P6	35.52	13° 33' 58"	150.00	17.84
C3	P7	P9	20.66	07° 53' 24"	150.00	10.34
C4	P12	P14	56.99	108° 50' 36"	30.00	41.94

0 40 80 120
HORZ: SCALE: 1"=40'

0 10 20 30
VERT: SCALE: 1"=10'

DRAFT
NOT FOR
CONSTRUCTION

E2 Consulting Engineers, Inc.
1900 Powell Street, Ste. 250
Emeryville, CA 94608
(510) 652-1164

CH2MHILL.

NO.	DATE	DESCRIPTION	GM/SPEC	DWN	CHKD	SUPV	APVD BY
2	9/8/14	PRE-FINAL (90%) DESIGN		PH	VMB	VMB	VMB
1	4/5/13	INTERMEDIATE (60%) DESIGN		PC	VMB	VMB	VMB
0	11/11/11	PRELIMINARY (30%) DESIGN		PC	VMB	VMB	VMB

REVISIONS

APPROVED BY
SO
SUPV VMB
DSGN PT
DWN PH
CHKD VMB
OK VMB
DATE 09/08/14
SCALES 1" =40'

TOPOCK GROUNDWATER REMEDIATION PROJECT
PLAN AND PROFILE
PIPELINE "I"
STA 8+00 TO STA 14+60
GAS TRANSMISSION & DISTRIBUTION
PACIFIC GAS AND ELECTRIC COMPANY
SAN FRANCISCO, CALIFORNIA

MICROFILM
BILL OF MATL
DWG LIST
SUPSDS
SUPSD BY
SHEET NO. of SHEETS
C-07-78
REV 2

FILENAME: E2-C-XXX-0778AD.DWG
PLOT DATE: $PLOTDATE PLOT TIME: $PLOTTIME
C:\Users\peter.hubbard\CAD\Topock\E2-C-XXX-0778.dwg, 22x34, 8/25/2014 5:48:48 PM
N1808

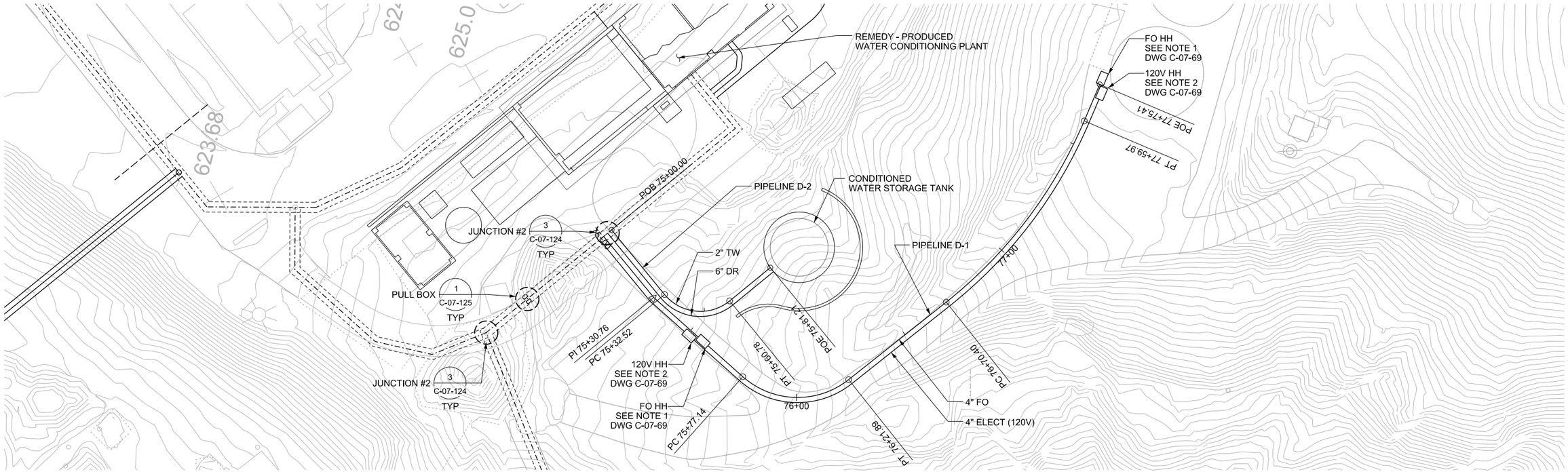

PIPELINE "D" - PLAN

(SCALE: 1" = 20')

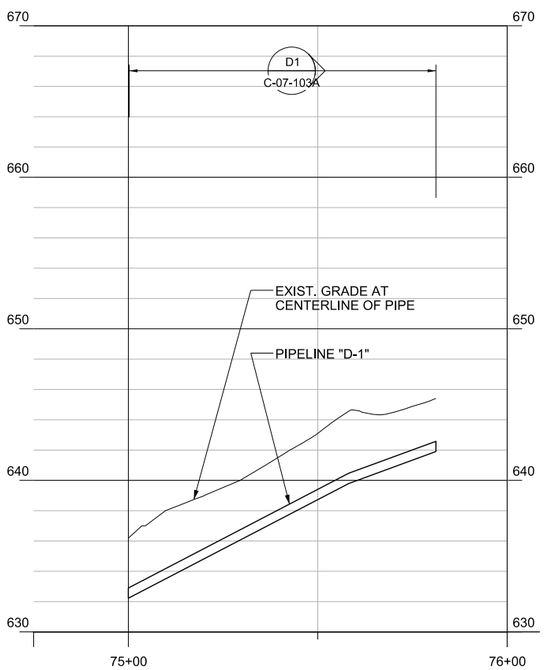

PIPELINE "D-1" - PROFILE

(SCALE: 1" = 20' H; 1" = 5' V)

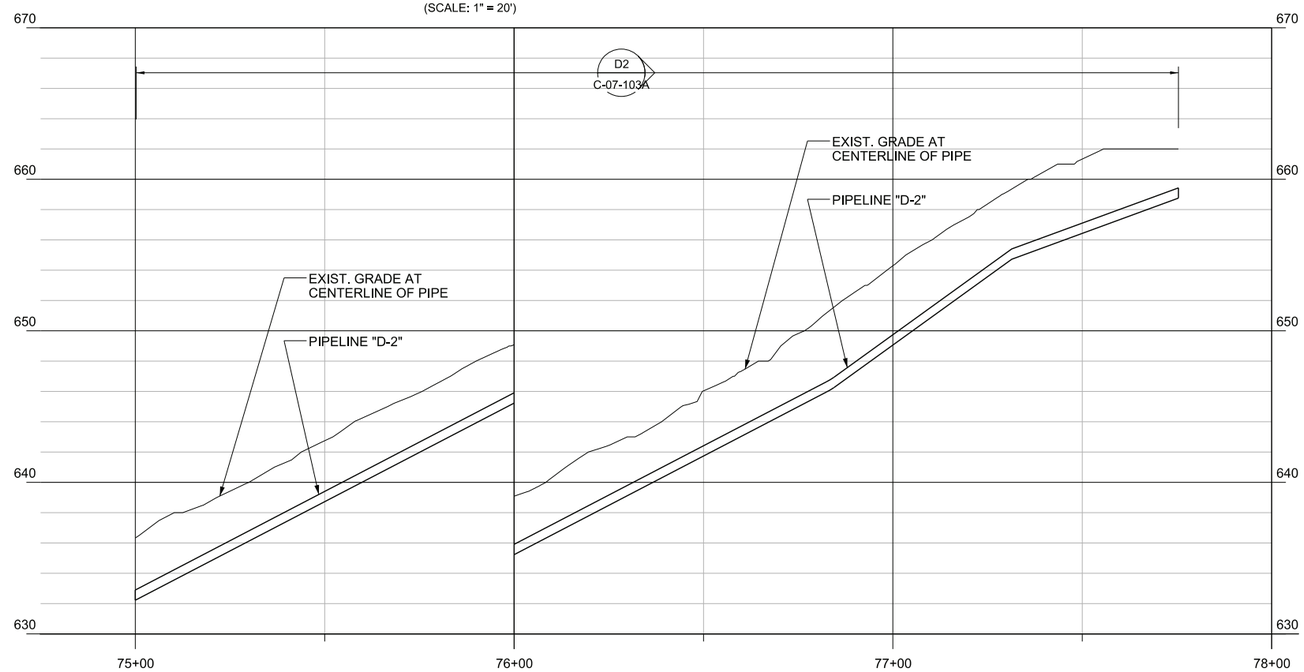

PIPELINE "D-2" - PROFILE

(SCALE: 1" = 20' H; 1" = 5' V)

0 20 40 60
HORIZ: SCALE: 1"=20'

0 5 10 15
VERT: SCALE: 1"=5'

- DRAFT - NOT FOR CONSTRUCTION

AECOM
2101 WEBSTER STREET SUITE 1000
OAKLAND, CA 94612-3060

PROJECT NO. 60272335

NO.	DATE	DESCRIPTION	GM/SPEC	DWN	CHKD	SUPV	APVD BY
1	9/8/14	PRE-FINAL (90%) DESIGN					
0	4/5/13	INTERMEDIATE (60%) DESIGN SUBMITTAL					

REVISIONS

APPROVED BY		
SO	XXXXX	
SUPV	PD	
DSGN	TL	
DWN	TL	
CHKD	JM	
OK	PD	
DATE	9/8/14	
SCALES	1" = 20'-0"	

TOPOCK GROUNDWATER REMEDIATION PROJECT
PLAN AND PROFILE
PIPELINE "D"
STA 75+00 TO STA 77+75
GAS TRANSMISSION & DISTRIBUTION
PACIFIC GAS AND ELECTRIC COMPANY
SAN FRANCISCO, CALIFORNIA

MICROFILM
BILL OF MATL
DWG LIST
SUPSDS
SUPSD BY
SHEET NO. OF SHEETS
C-07-79
REV 1

N1808

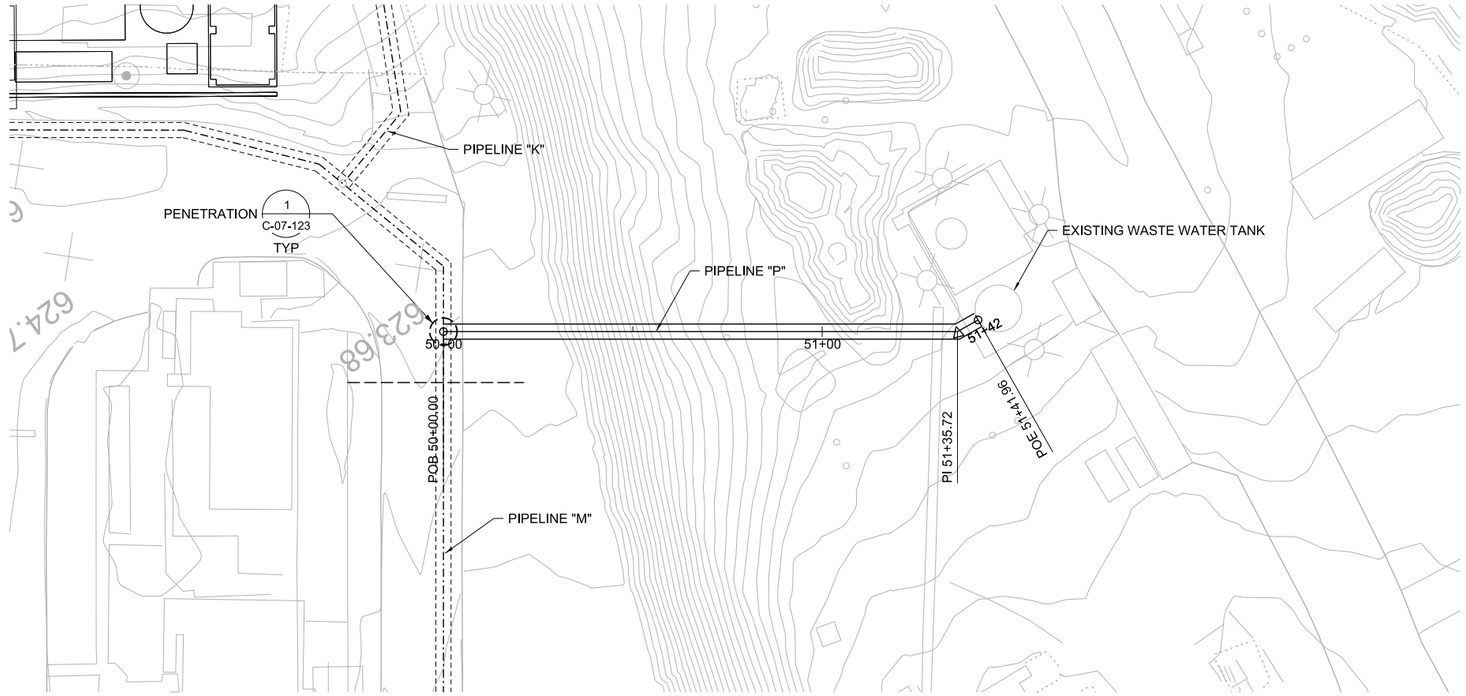

PIPELINE "P" - PLAN

(SCALE: 1" = 20')

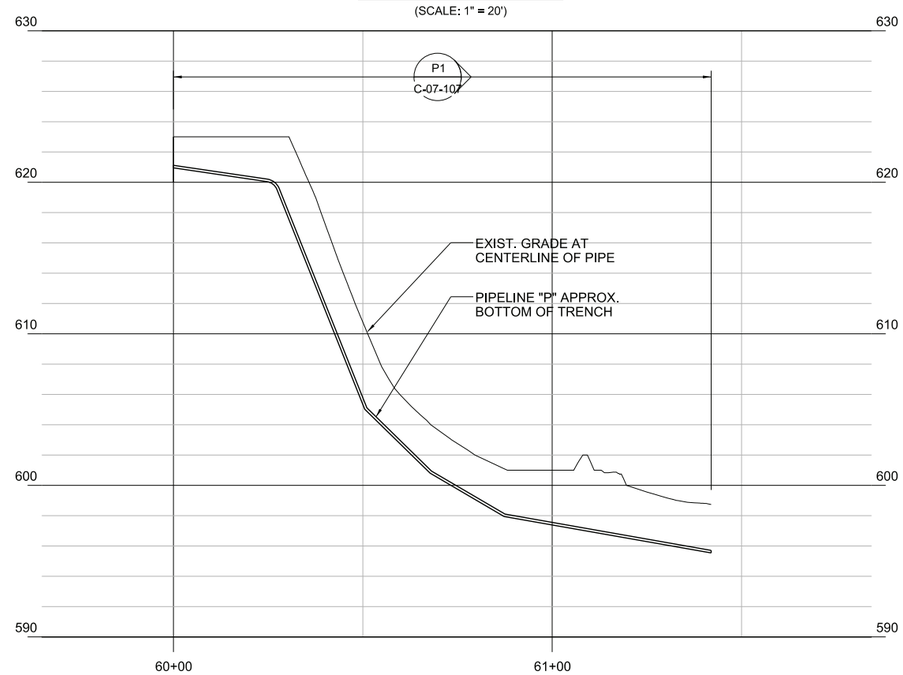

PIPELINE "P" - PROFILE

(SCALE: 1" = 20' H; 1" = 5' V)

0 20 40 60
HORIZ: SCALE: 1"=20'

0 5 10 15
VERT: SCALE: 1"=5'

- DRAFT - NOT FOR CONSTRUCTION

AECOM
2101 WEBSTER STREET SUITE 1000
OAKLAND, CA 94612-3060

PROJECT NO. 60272335

NO.	DATE	DESCRIPTION	GM/SPEC	DWN	CHKD	SUPV	APVD BY
0	9/8/14	PRE-FINAL (90%) DESIGN					

REVISIONS

APPROVED BY	
SO	XXXXX
SUPV	PD
DSGN	TL
DWN	TL
CHKD	JM
OK	PD
DATE	9/8/14
SCALES	1" = 20'-0"

TOPOCK GROUNDWATER REMEDIATION PROJECT
PLAN AND PROFILE
PIPELINE "P"
STA 50+00 TO STA 51+42
GAS TRANSMISSION & DISTRIBUTION
PACIFIC GAS AND ELECTRIC COMPANY
SAN FRANCISCO, CALIFORNIA

MICROFILM
BILL OF MATL
DWG LIST
SUPSDS
SUPSD BY
SHEET NO. OF SHEETS
C-07-80
REV 0

N1808

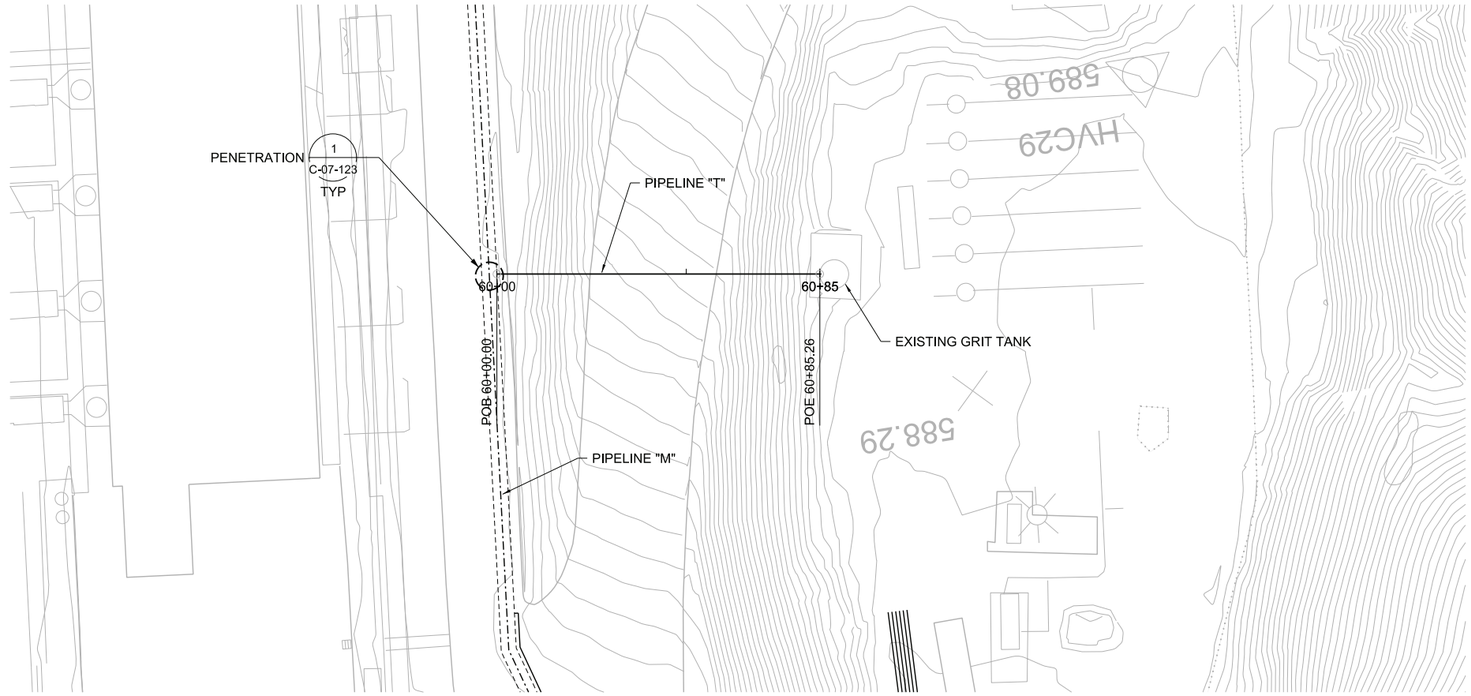

PIPELINE "T" - PLAN

(SCALE: 1" = 20')

NOTE

1. SEE DWG. C-10-02 FOR PIPING LAYOUT

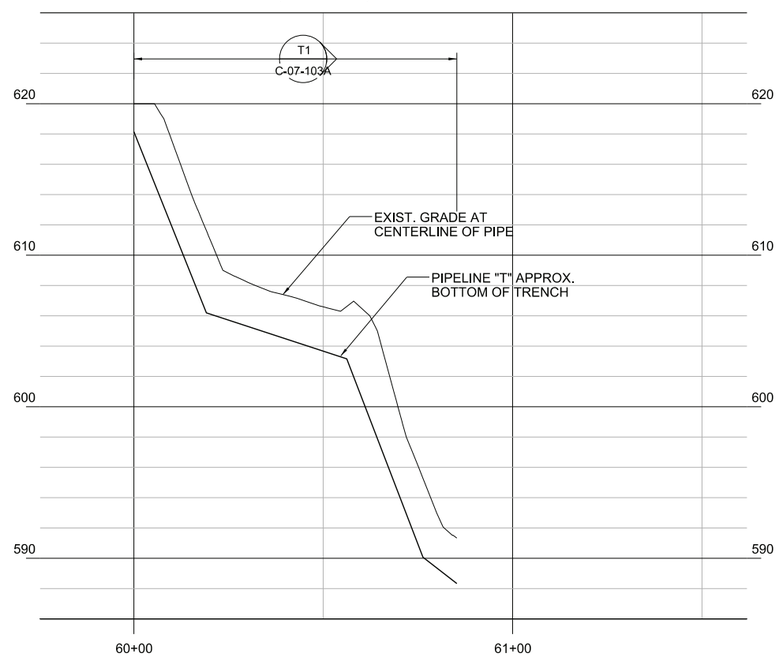

PIPELINE "T" - PROFILE

(SCALE: 1" = 20' H; 1" = 5' V)

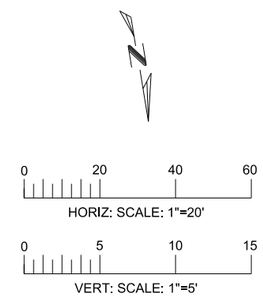

- DRAFT -
NOT FOR CONSTRUCTION

AECOM
2101 WEBSTER STREET SUITE 1000
OAKLAND, CA 94612-3060

PROJECT NO. 60272335

NO.	DATE	DESCRIPTION	GM/SPEC	DWN	CHKD	SUPV	APVD BY
0	9/8/14	PRE-FINAL (90%) DESIGN					

REVISIONS

APPROVED BY

SO	XXXXX
SUPV	PD
DSGN	TL
DWN	TL
CHKD	JM
OK	PD
DATE	9/8/14
SCALES	1" = 20'-0"

TOPOCK GROUNDWATER REMEDIATION PROJECT
PLAN AND PROFILE
PIPELINE "T"
STA 60+00 TO STA 60+85
GAS TRANSMISSION & DISTRIBUTION
PACIFIC GAS AND ELECTRIC COMPANY
SAN FRANCISCO, CALIFORNIA

MICROFILM
BILL OF MATL
DWG LIST
SUPSDS
SUPSD BY
SHEET NO. OF SHEETS
C-07-81
REV 0

N1808

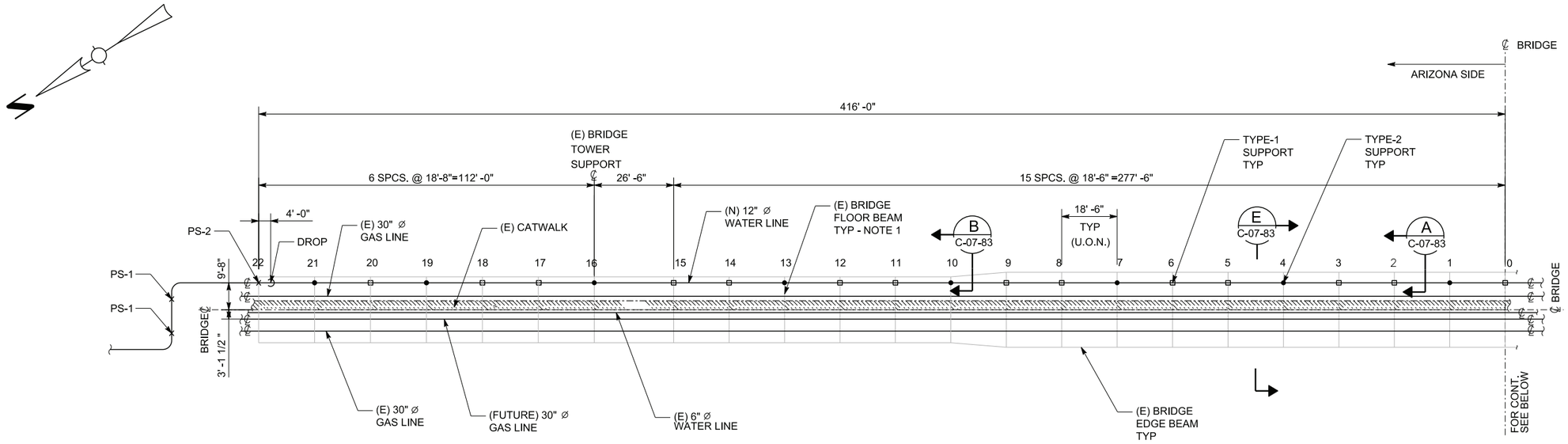

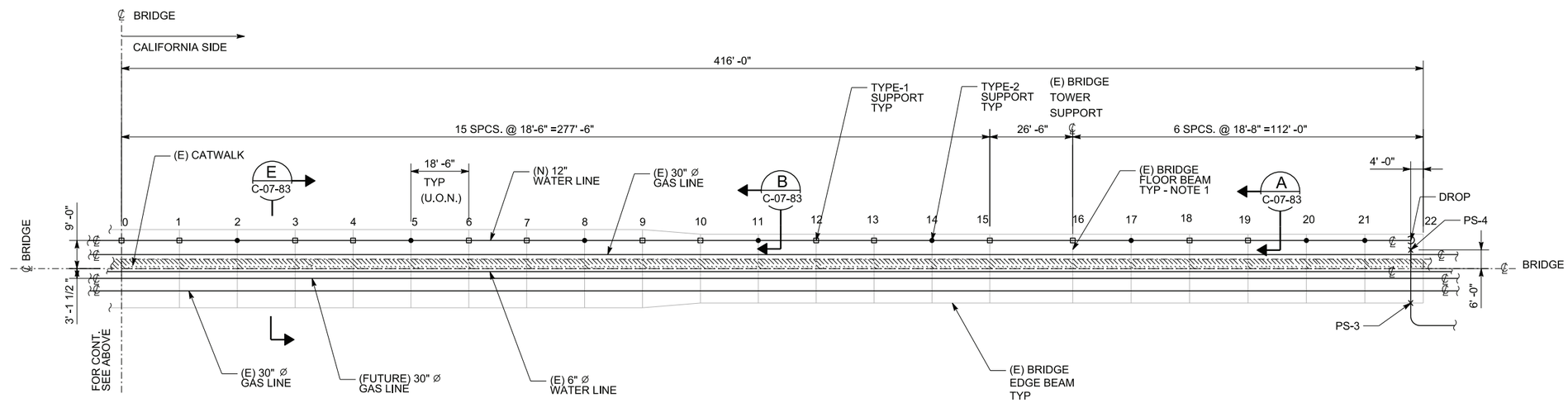

PLAN (SUPPORT LOCATION)

SCALE: 1"=20'

SYMBOLS

- ☐ TYPE-1 SUPPORT
- ● TYPE-2 SUPPORT

REFERENCES

1. C-07-29 PIPE LINE B, PLAN & PROFILE

NOTES

1. (E) BRIDGE FLOOR BEAMS ARE EITHER W18X35 OR W24X55
2. SEE DWG. C-07-83 & C-07-84 FOR SUPPORT DETAILS

- DRAFT - NOT FOR CONSTRUCTION

AECOM
2101 WEBSTER STREET SUITE 1000
OAKLAND, CA 94612-3060

PROJECT NO. 60272335

NO.	DATE	DESCRIPTION	GM/SPEC	DWN	CHKD	SUPV	APVD BY
0	9/8/14	PRE-FINAL (90%) DESIGN					

REVISIONS

APPROVED BY: SO XXXXX; SUPV; DSGN; DWN; CHKD; OK; DATE; SCALES 1"=20'

TOPOCK GROUNDWATER REMEDIATION PROJECT
STRUCTURE-PLAN
SECTION LOCATION-12" WATER LINE
TOPOCK L300-A ARCH BRIDGE
GAS TRANSMISSION & DISTRIBUTION
PACIFIC GAS AND ELECTRIC COMPANY
SAN FRANCISCO, CALIFORNIA

MICROFILM; BILL OF MATL; DWG LIST; SUPSDS; SUPSD BY

SHEET NO. C-07-82 OF SHEETS; REV 0

N1808

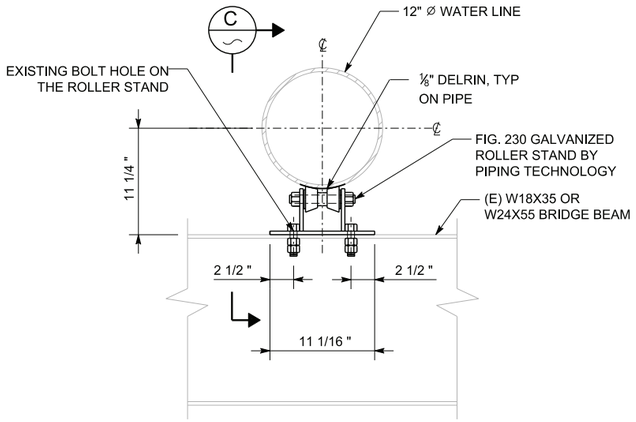

SECTION A C-07-82
SCALE: 1 1/2 "=1'-0" C-07-83

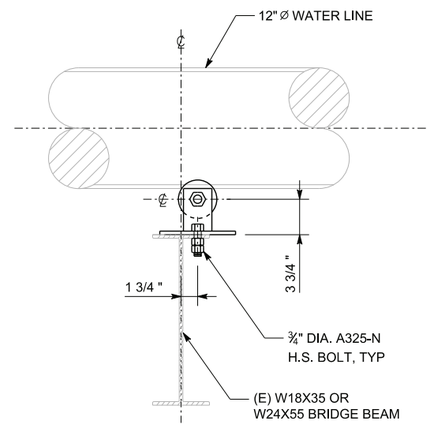

SECTION C
SCALE: 1 1/2 "=1'-0"

TYPE-1 SUPPORT

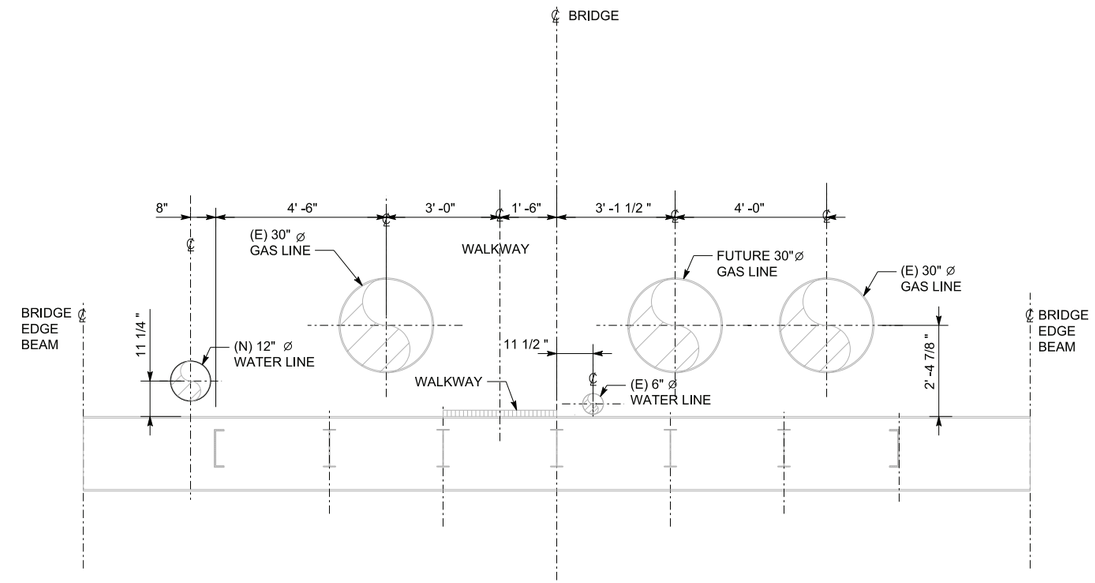

SECTION E C-07-82
SCALE: 1/2 "=1'-0" C-07-83

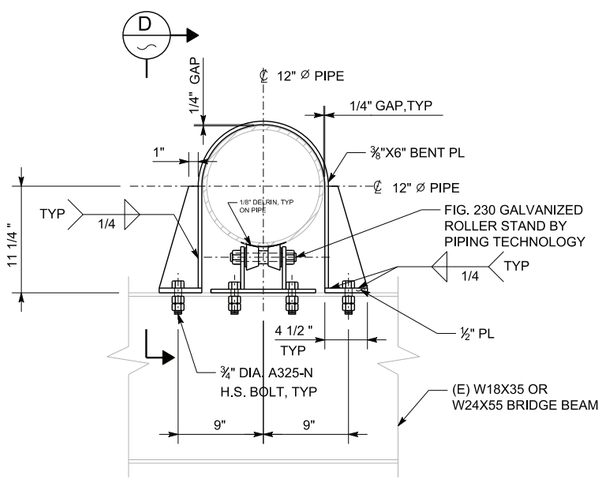

SECTION B C-07-82
SCALE: 1 1/2 "=1'-0" C-07-83

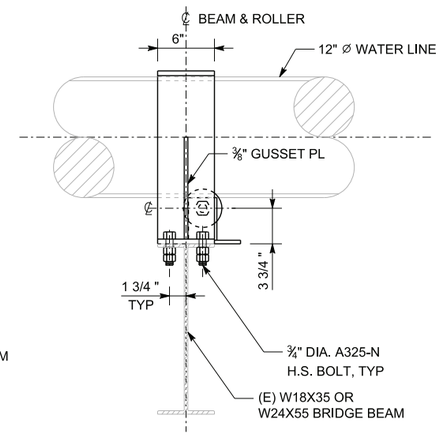

NOTE: SEE SECTION C FOR ROLLER SUPPORT CONNECTION TO (E) BRIDGE BEAM.

SECTION D
SCALE: 1 1/2 "=1'-0"

TYPE-2 SUPPORT

- DRAFT - NOT FOR CONSTRUCTION

AECOM
2101 WEBSTER STREET SUITE 1000
OAKLAND, CA 94612-3060

PROJECT NO. 60272335

NO.	DATE	DESCRIPTION	GM/SPEC	DWN	CHKD	SUPV	APVD BY
0	9/8/14	PRE-FINAL (90%) DESIGN					

REVISIONS

APPROVED BY: SO XXXXX; SUPV; DSGN; DWN; CHKD; OK; DATE; SCALES AS SHOWN

TOPOCK GROUNDWATER REMEDIATION PROJECT
STRUCTURE-SECTIONS
SUPPORT 12" WATER LINE
TOPOCK L300-A- ARCH BRIDGE
GAS TRANSMISSION & DISTRIBUTION
PACIFIC GAS AND ELECTRIC COMPANY
SAN FRANCISCO, CALIFORNIA

MICROFILM
BILL OF MATL
DWG LIST
SUPSDS
SUPSD BY
SHEET NO. OF SHEETS
C-07-83
REV 0

N1808

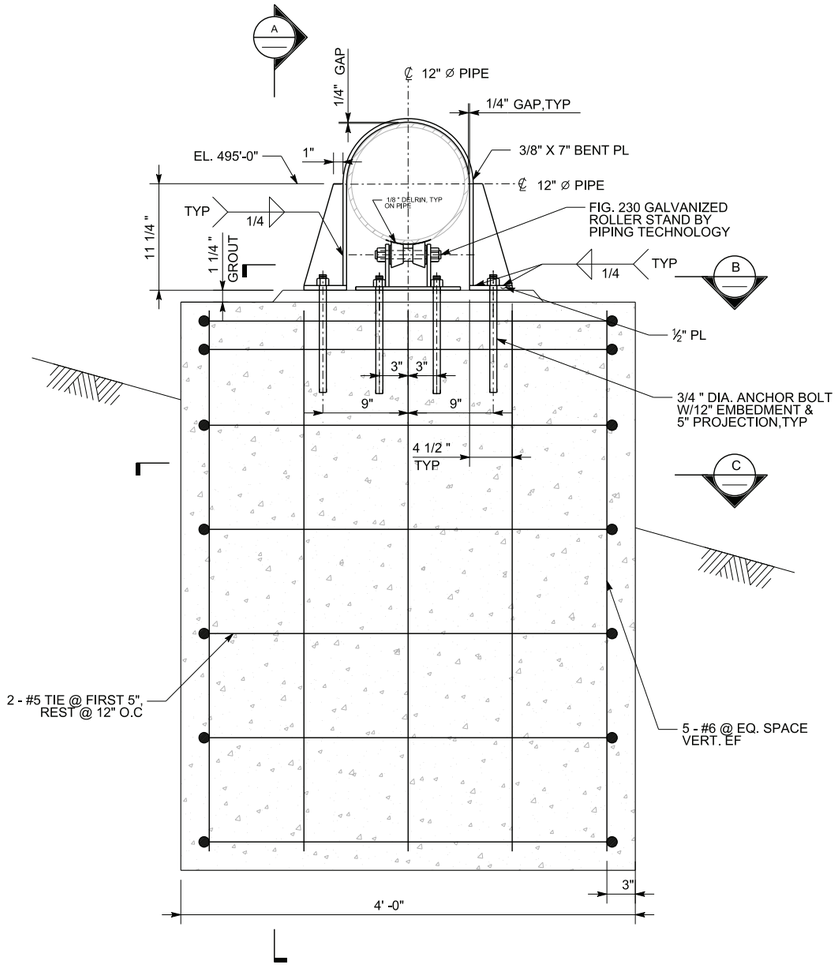

1 PS-1 SUPPORT DETAIL
1 1/2"=1'-0"

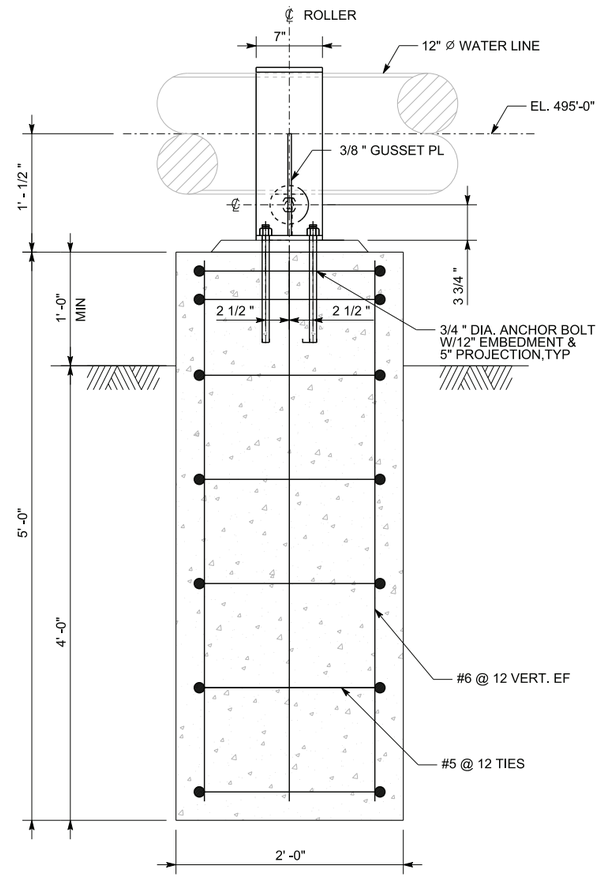

A DETAIL
1 1/2"=1'-0"

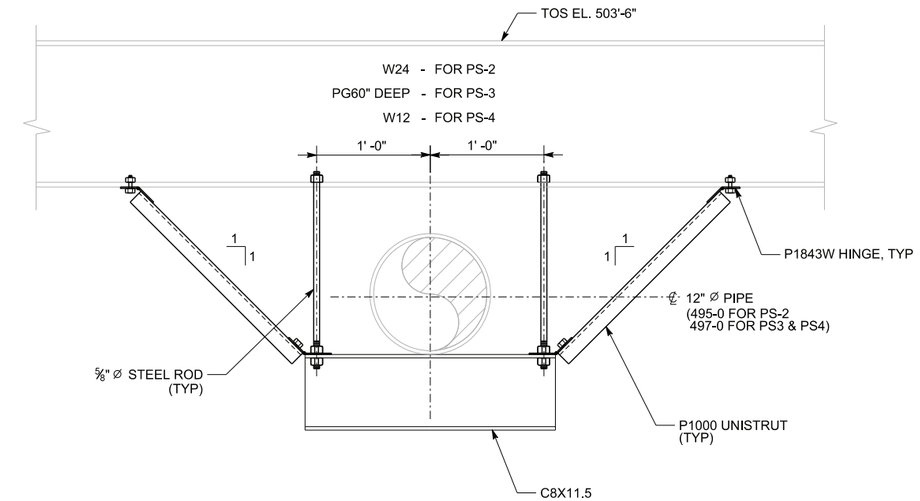

2 PS-2, PS-3, PS-4 DETAILS
NTS

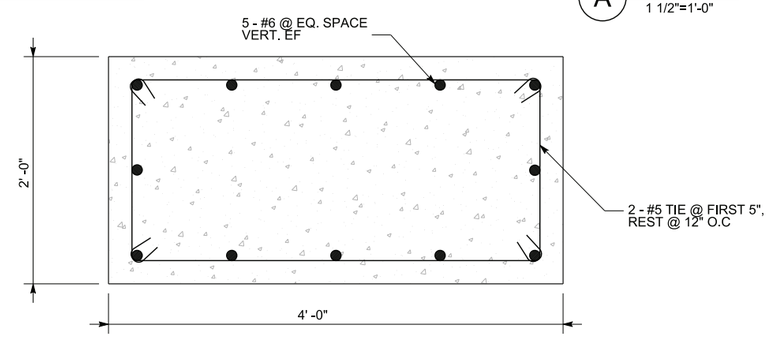

C SECTION
1 1/2"=1'-0"

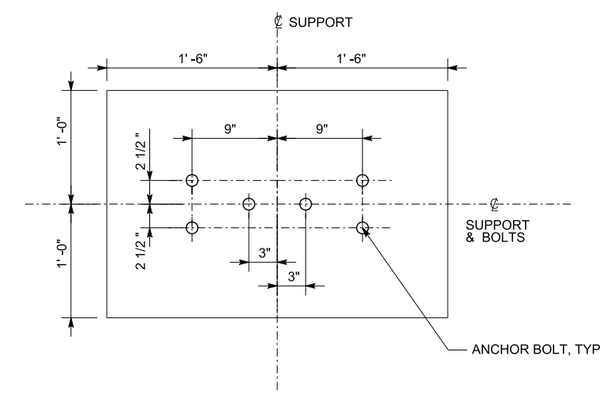

B SECTION
1 1/2"=1'-0"

- DRAFT - NOT FOR CONSTRUCTION

AECOM
2101 WEBSTER STREET SUITE 1000
OAKLAND, CA 94612-3060
PROJECT NO. 60272335

NO.	DATE	DESCRIPTION	GM/SPEC	DWN	CHKD	SUPV	APVD BY
0	9/8/14	PRE-FINAL (90%) DESIGN					

REVISIONS

APPROVED BY | SO XXXXX | SUPV | DSGN | DWN | CHKD | OK | DATE | SCALES AS SHOWN

TOPOCK GROUNDWATER REMEDIATION PROJECT
STRUCTURE-SECTIONS
SUPPORT 12" WATER LINE
TOPOCK L300-A- ARCH BRIDGE
GAS TRANSMISSION & DISTRIBUTION
PACIFIC GAS AND ELECTRIC COMPANY
SAN FRANCISCO, CALIFORNIA

MICROFILM | BILL OF MATL | DWG LIST | SUPSDS | SUPSD BY

SHEET NO. C-07-84 OF SHEETS | REV 0

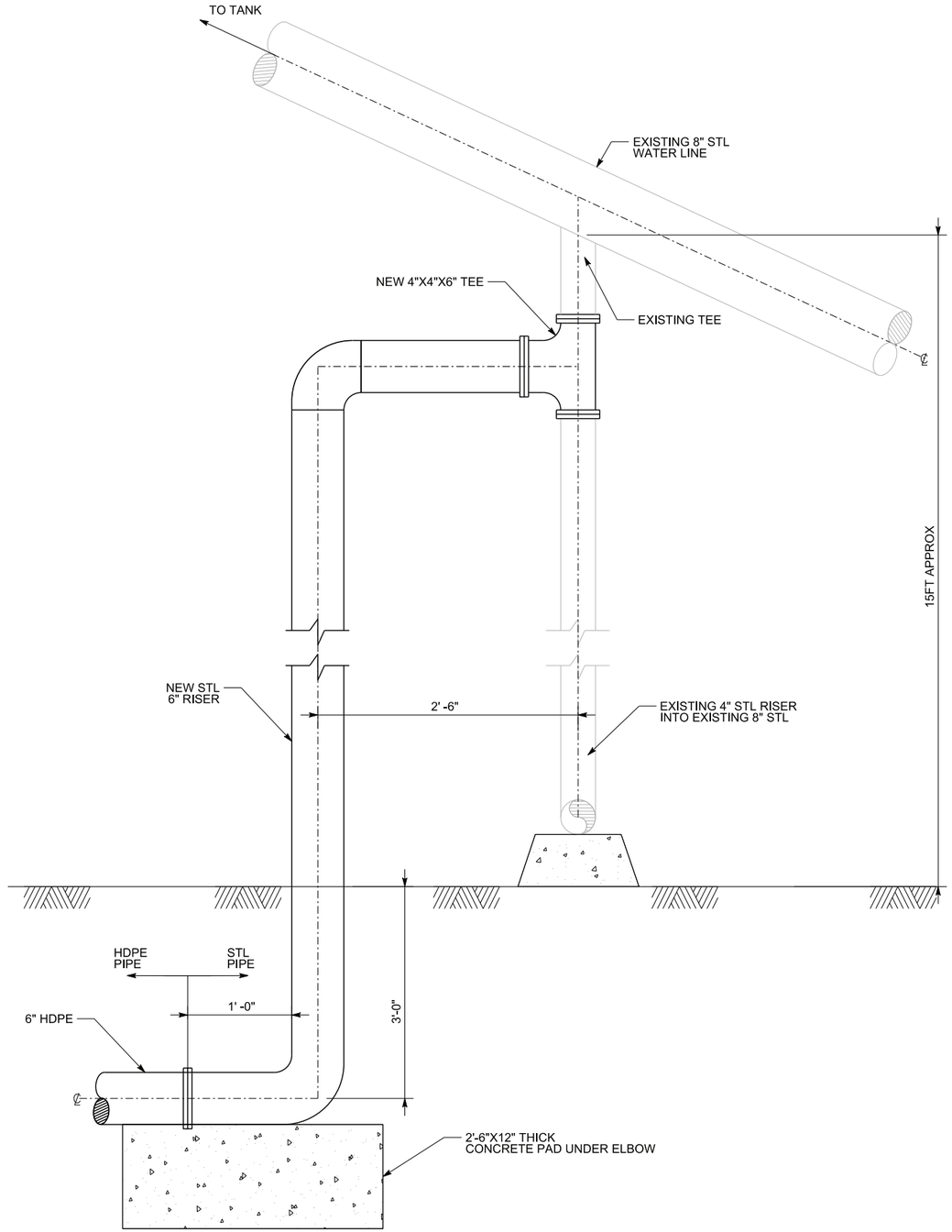

1 CONCRETE DETAIL
1 1/2"=1'-0"
C-07-26

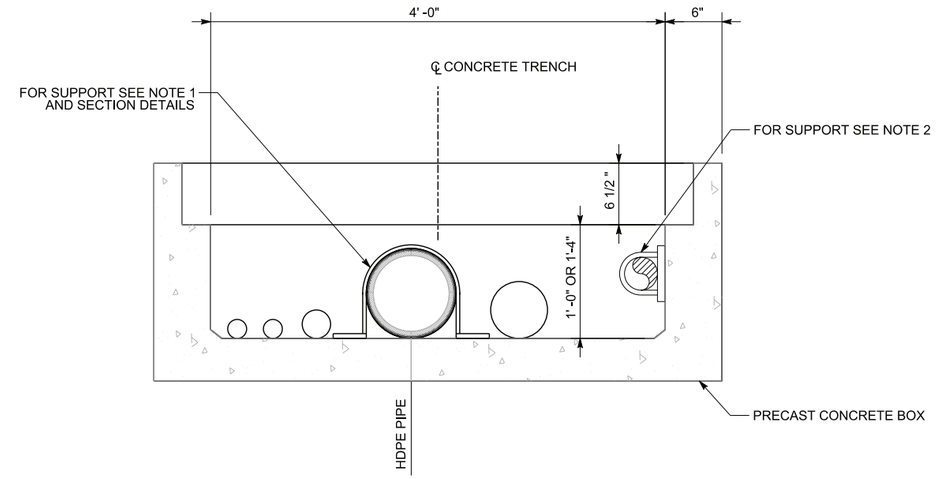

- TYPICAL TRENWA SECTION
1 1/2"=1'-0"

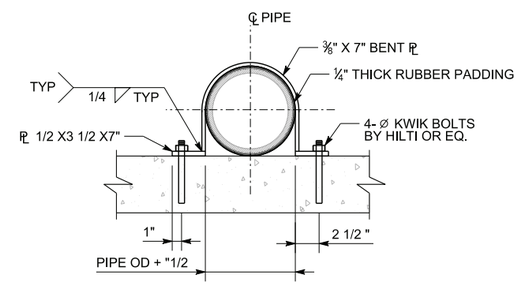

- PIPE SUPPORT SECTION
1 1/2"=1'-0"

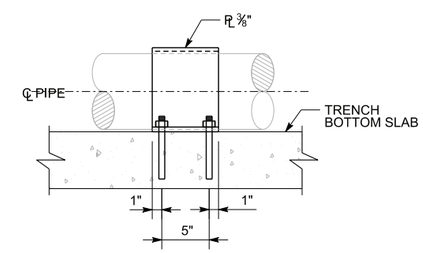

- PIPE SUPPORT ELEVATION
1 1/2"=1'-0"

NOTES:

1. ALL SUPPORTS FOR 3"Ø AND LARGER ARE @ 50' C/C SPACING, FOR PIPE LESS THAN 3"Ø ARE @ 200' C/C SPACING. FOR SUPPORTS (USE TZ-CS ⅝"Ø X 4" FOR 8"Ø PIPE, AND TZ-CS ½"Ø X 3¼" FOR OTHERS).
2. SUPPORTS FOR 4"-480V & 4" F.O. ARE @ 20' C/C SPACING (USE HOLD DOWN PIPE CLAMS PTP FIG HD-1 PIPING TECHNOLOGY PRODUCTS OR EQ. WITH ½"Ø TZ-CS 3¼" LG ANCHORS).
3. STAGGER SUPPORTS TO PREVENT A WEAKENED PLANE ACROSS THE PIPE TRENCH.
4. PIPELINES SHOWN ARE TYPICAL ONLY. FOR SPECIFIC REQUIEREMENTS REFER TO PLAN AND PROFILE DRAWINGS

- DRAFT - NOT FOR CONSTRUCTION

AECOM
2101 WEBSTER STREET SUITE 1000
OAKLAND, CA 94612-3060

PROJECT NO. 60272335

NO.	DATE	DESCRIPTION	GM/SPEC	DWN	CHKD	SUPV	APVD BY
0	9/8/14	PRE-FINAL (90%) DESIGN					

REVISIONS

APPROVED BY
SO XXXXX
SUPV
DSGN
DWN
CHKD
OK
DATE
SCALES AS SHOWN

TOPOCK GROUNDWATER REMEDIATION PROJECT

PIPE SUPPORT DETAILS

GAS TRANSMISSION & DISTRIBUTION
PACIFIC GAS AND ELECTRIC COMPANY
SAN FRANCISCO, CALIFORNIA

MICROFILM
BILL OF MATL
DWG LIST
SUPSDS
SUPSD BY
SHEET NO. OF SHEETS
C-07-85
REV 0

N1808

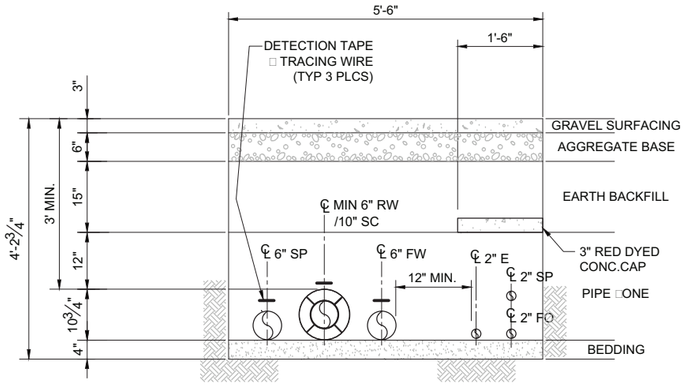

PIPELINE SECTION A1

A1 SECTION
3/4" = 1'-0"
C-07-20

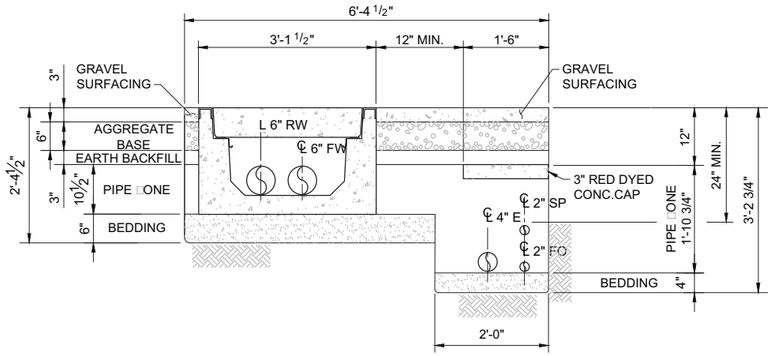

PIPELINE SECTION A2

A2 SECTION
3/4" = 1'-0"
C-07-20
C-07-21

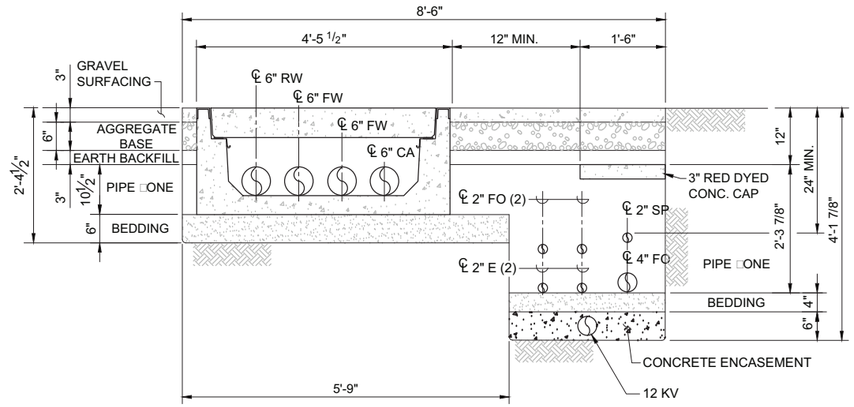

PIPELINE SECTION A3

A3 SECTION
3/4" = 1'-0"
C-07-21

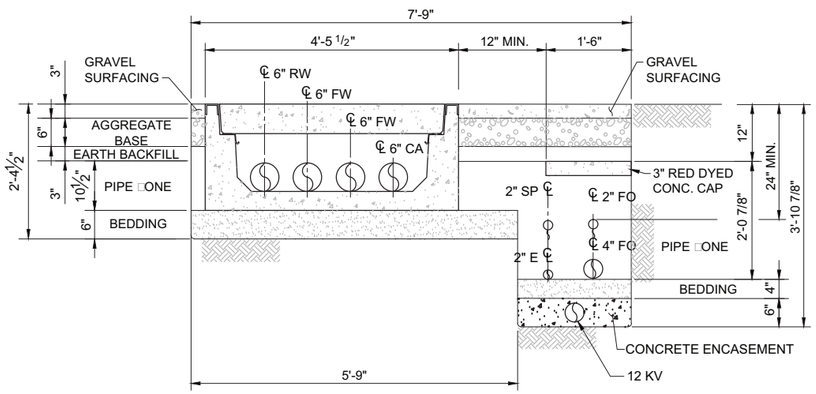

PIPELINE SECTION A4

A4 SECTION
3/4" = 1'-0"
C-07-21

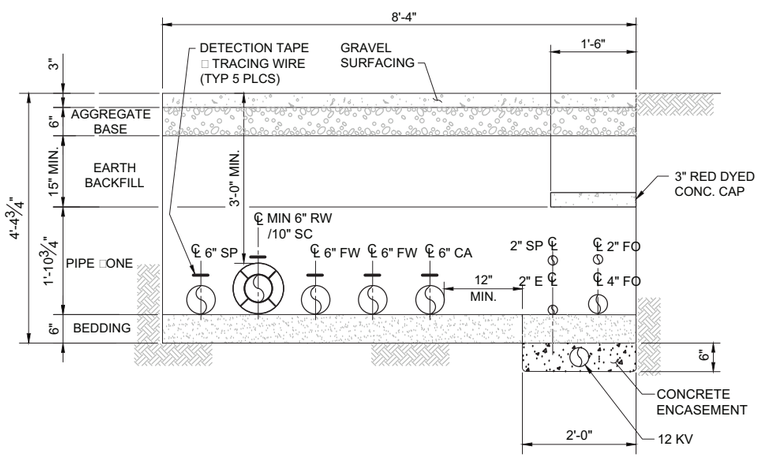

PIPELINE SECTION A5

A5 SECTION
3/4" = 1'-0"
C-07-21

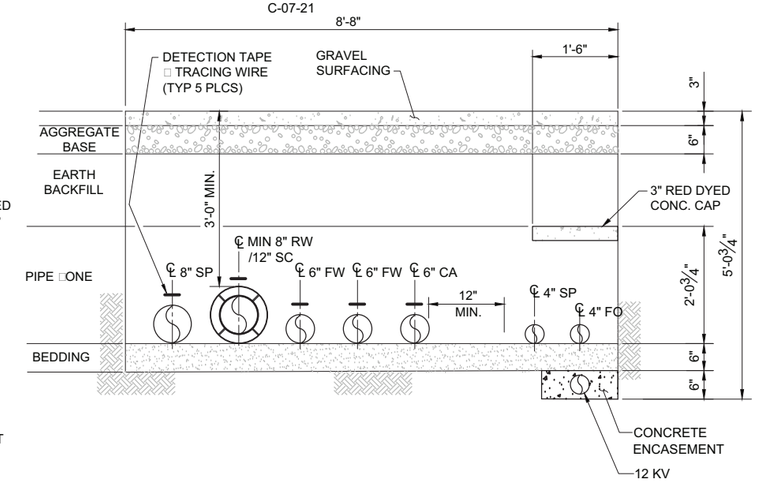

PIPELINE SECTION A6

A6 SECTION (GRAVEL ROAD)
3/4" = 1'-0"
C-07-21
C-07-22
C-07-23
C-07-24

NOTE:

1. REFER TO C-07-03 FOR LOCATION OF EACH PIPELINE SECTION.

DRAFT
NOT FOR
CONSTRUCTION

E2 Consulting Engineers, Inc.
1900 Powell Street, Ste. 250
Emeryville, CA 94608
(510) 652-1164

CH2MHILL.

NO.	DATE	DESCRIPTION	GM/SPEC	DWN	CHKD	SUPV	APVD BY
1	9/8/14	PRE-FINAL (90%) DESIGN		PH	PT	VMB	VMB
0	4/5/13	INTERMEDIATE (60%) DESIGN		PC	PT	VMB	VMB

REVISIONS

APPROVED BY
SO
SUPV VMB
DSGN PT
DWN PC
CHKD VMB
OK VMB
DATE 09/08/14
SCALES AS SHOWN

TOPOCK GROUNDWATER REMEDIATION PROJECT

TRENCH SECTIONS

GAS TRANSMISSION & DISTRIBUTION
PACIFIC GAS AND ELECTRIC COMPANY
SAN FRANCISCO, CALIFORNIA

MICROFILM
BILL OF MATL
DWG LIST
SUPSDS
SUPSD BY
SHEET NO. of SHEETS
C-07-100
REV 1

FILENAME: E2-C-XXX-07100AD.DWG
PLOT DATE: PLOTDATE PLOT TIME: PLOTTIME

C:\Users\peter.hubbard\CAD\Topock\E2-C-XXX-07100.DWG, 11X17, 8/29/2014 7:56:02 AM

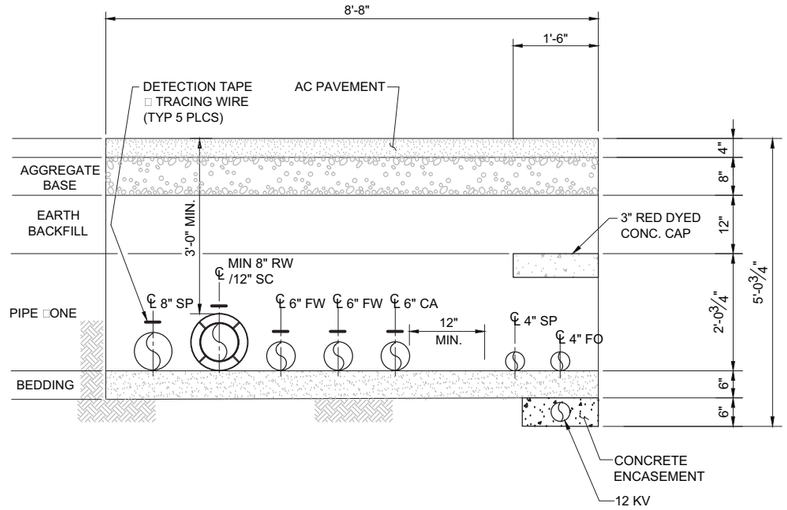

PIPELINE SECTION A6

A6 SECTION (PAVED ROAD)

3/4" = 1'-0"

C-07-24

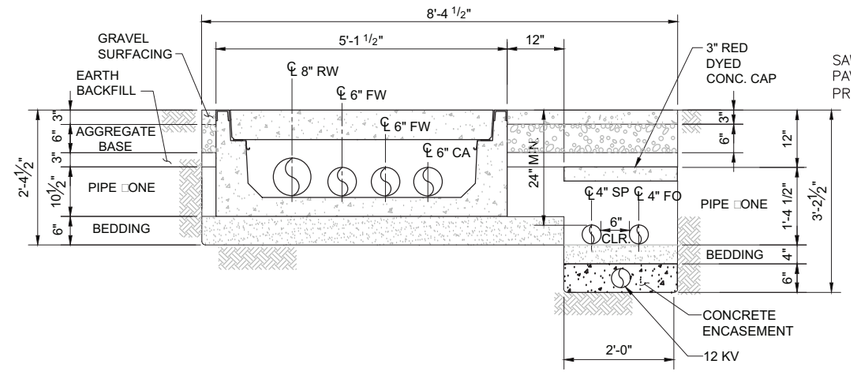

PIPELINE SECTION A7

A7 SECTION

3/4" = 1'-0"

C-07-22
C-07-23

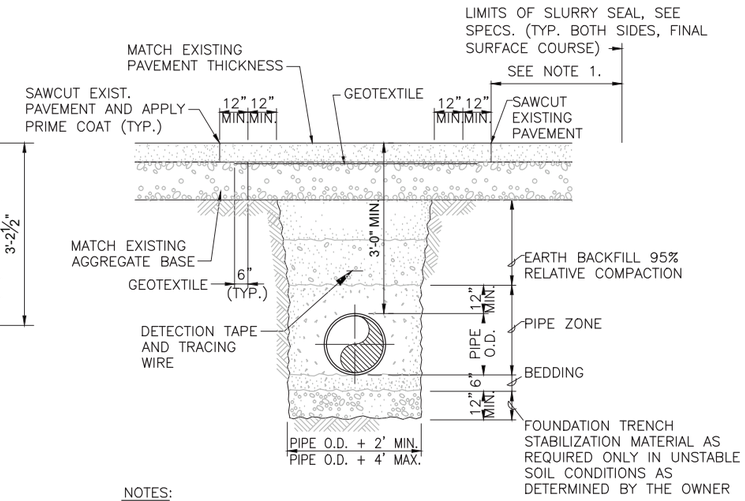

NOTES:

1. ABOVE MIN. APPLIES TO TRENCH TRANSVERSE TO STREET.

B4 SECTION (IN PAVEMENT)

3/4" = 1'-0"

C-07-30
C-07-31

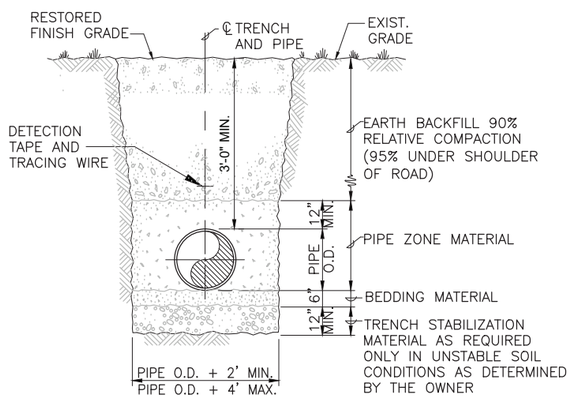

NOTES:

1. IN NON-ROAD AREAS, RESTORE TO MATCH ORIGINAL CONDITION. RESEEDING IS NOT A REQUIREMENT.

B4 SECTION (ROAD SHOULDER OR OPEN FIELD)

3/4" = 1'-0"

C-07-30
C-07-31
C-07-32
C-07-33
C-07-34
C-07-35
C-07-36
C-07-37

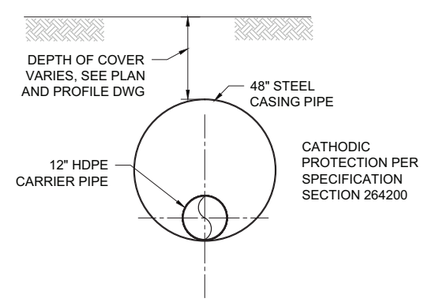

B5 SECTION

3/4" = 1'-0"

C-07-30

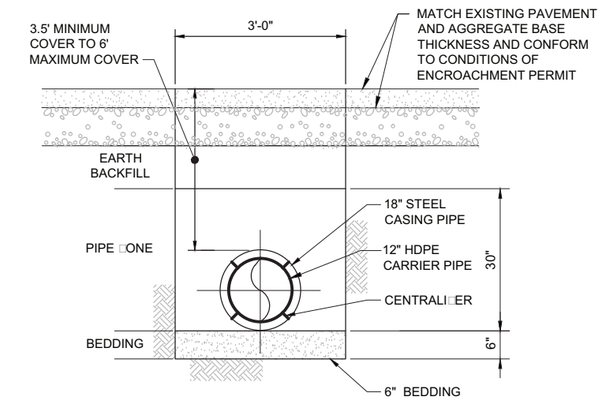

B6 SECTION

3/4" = 1'-0"

C-07-30

NOTE

1. REFER TO C-07-03 FOR LOCATION OF EACH PIPELINE SECTION.

DRAFT NOT FOR CONSTRUCTION

E2 Consulting Engineers, Inc.
1900 Powell Street, Ste. 250
Emeryville, CA 94608
(510) 652-1164

CH2MHILL.

NO.	DATE	DESCRIPTION	GM/SPEC	DWN	CHKD	SUPV	APVD BY
1	9/8/14	PRE-FINAL (90%) DESIGN		PH	PT	VMB	VMB
0	4/5/13	INTERMEDIATE (60%) DESIGN		PC	PT	VMB	VMB

REVISIONS

APPROVED BY
SO
SUPV VMB
DSGN PT
DWN PC
CHKD VMB
OK VMB
DATE 09/08/14
SCALES 3/4"=1'-0"

TOPOCK GROUNDWATER REMEDIATION PROJECT

TRENCH SECTIONS

GAS TRANSMISSION & DISTRIBUTION
PACIFIC GAS AND ELECTRIC COMPANY
SAN FRANCISCO, CALIFORNIA

MICROFILM
BILL OF MATL
DWG LIST
SUPSDS
SUPSD BY
SHEET NO. of SHEETS
C-07-101
REV 1

FILENAME: E2-C-XXX-07101AD.DWG
PLOT DATE: PLOTDATE PLOT TIME: PLOTTIME

C:\Users\peter.hubbard\CAD\Topock\E2-C-XXX-07101.DWG, 11X17, 9/2/2014 8:04:47 AM

N180B

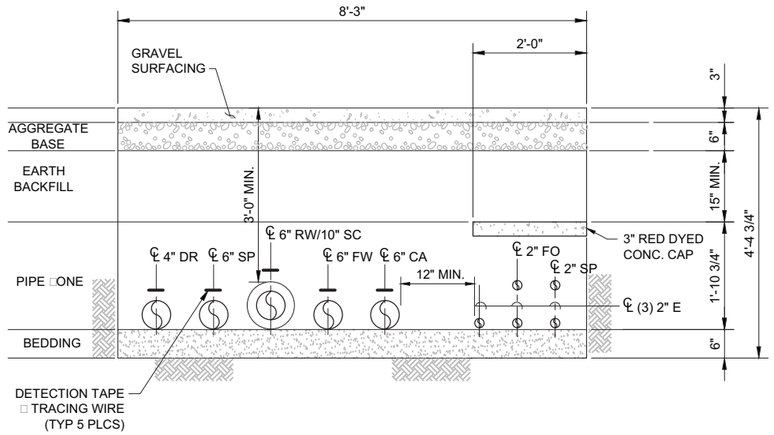

H1 SECTION
3/4" = 1'-0"
C-07-25

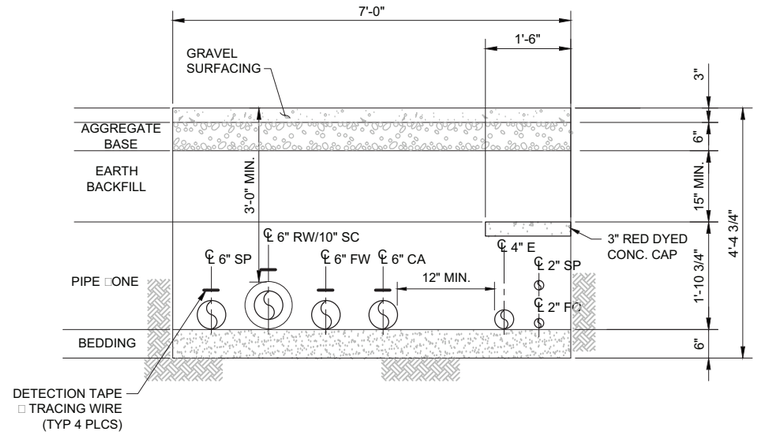

H2 SECTION
3/4" = 1'-0"
C-07-25

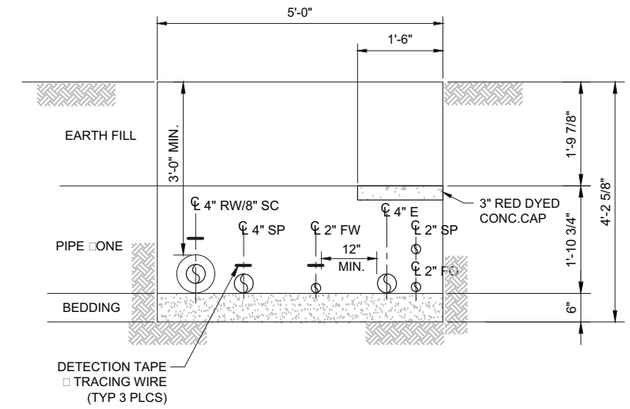

PIPELINE SECTION I1, I3

I1 SECTION (OPEN FIELD)
3/4" = 1'-0"
C-07-79

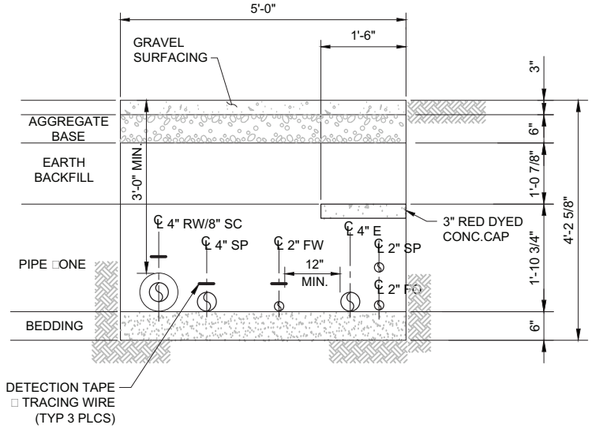

PIPELINE SECTION I1, I3

I1 SECTION (GRAVEL ROAD)
3/4" = 1'-0"
C-07-79

NOTE:

1. REFER TO C-07-03 FOR LOCATION OF EACH PIPELINE SECTION.

DRAFT NOT FOR CONSTRUCTION

E2 Consulting Engineers, Inc.
1900 Powell Street, Ste. 250
Emeryville, CA 94608
(510) 652-1164

CH2MHILL.

NO.	DATE	DESCRIPTION	GM/SPEC	DWN	CHKD	SUPV	APVD BY
1	9/8/14	PRE-FINAL (90%) DESIGN		PH	PT	VMB	VMB
0	4/5/13	INTERMEDIATE (60%) DESIGN		PC	PT	VMB	VMB

REVISIONS

APPROVED BY
SO
SUPV VMB
DSGN PT
DWN PC
CHKD VMB
OK VMB
DATE 09/08/14
SCALES 3/4"=1'-0"

TOPOCK GROUNDWATER REMEDIATION PROJECT

PIPELINE SECTIONS

GAS TRANSMISSION & DISTRIBUTION
PACIFIC GAS AND ELECTRIC COMPANY
SAN FRANCISCO, CALIFORNIA

MICROFILM
BILL OF MATL
DWG LIST
SUPSDS
SUPSD BY
SHEET NO. of SHEETS
C-07-102
REV 1

FILENAME E2-C-XXX-07102AD.DWG
PLOT DATE PLOTDATE PLOT TIME PLOTTIME

C:\Users\peter.hubbard\CAD\Topock\E2-C-XXX-07102.DWG, 11X17, 8/29/2014 3:49:25 PM

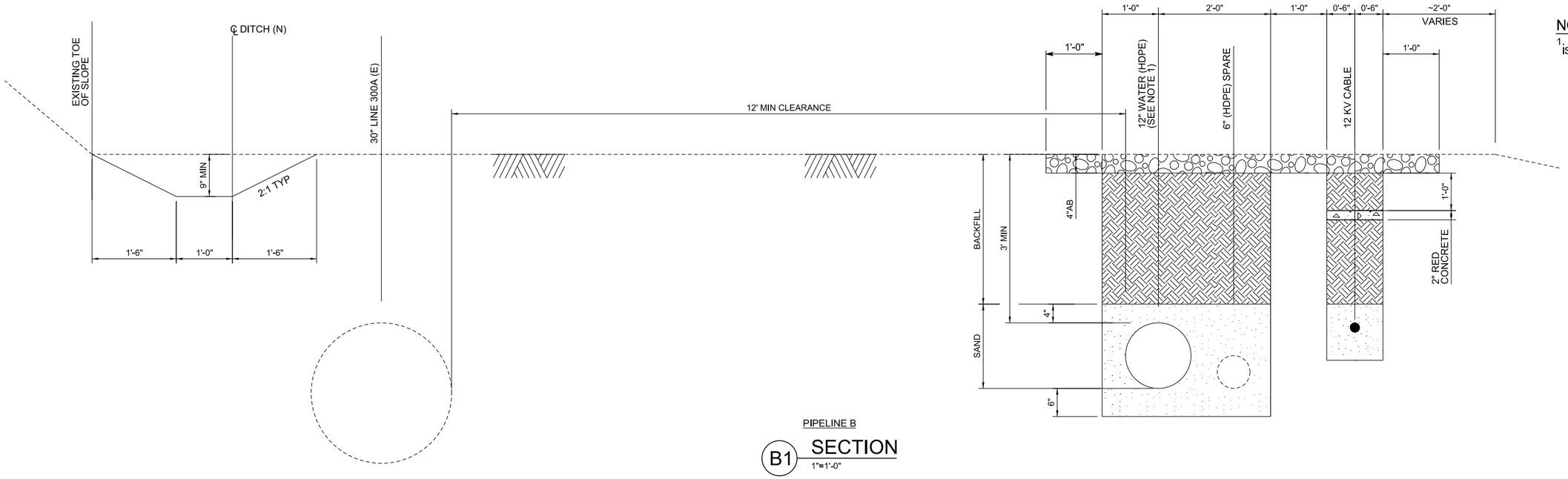

PIPELINE B

B1 SECTION

1"=1'-0"

C-07-26
C-07-27

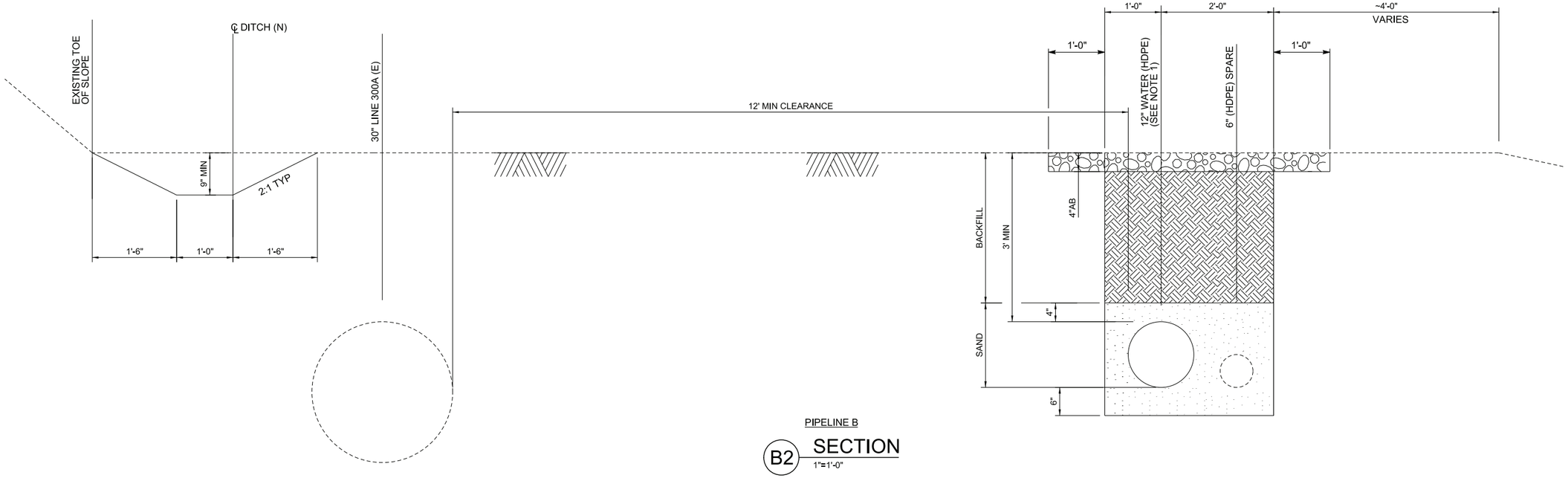

PIPELINE B

B2 SECTION

1"=1'-0"

C-07-28

NOTE:

1. ALIGNMENT DATA SHOWN ON PLAN IS BASED ON THIS PIPE.

- DRAFT - NOT FOR CONSTRUCTION

AECOM

2101 WEBSTER STREET SUITE 1000
OAKLAND, CA 94612-3060

PROJECT NO. 60272335

N1808

NO.	DATE	DESCRIPTION	GM/SPEC	DWN	CHKD	SUPV	APVD BY
1	9/8/14	PRE-FINAL (90%) DESIGN					
0	4/5/13	INTERMEDIATE (60%) DESIGN					

REVISIONS

APPROVED BY		
SO	XXXXX	
SUPV	PD	
DSGN	TL	
DWN	TL	
CHKD	JM	
OK	PD	
DATE	9/8/14	
SCALES	1" = 1'-0"	

TOPOCK GROUNDWATER REMEDIATION PROJECT

PIPELINE SECTIONS

GAS TRANSMISSION & DISTRIBUTION
PACIFIC GAS AND ELECTRIC COMPANY
SAN FRANCISCO, CALIFORNIA

MICROFILM	
BILL OF MATL	
DWG LIST	
SUPSDS	
SUPSD BY	
SHEET NO. OF	SHEETS
C-07-103	REV 1

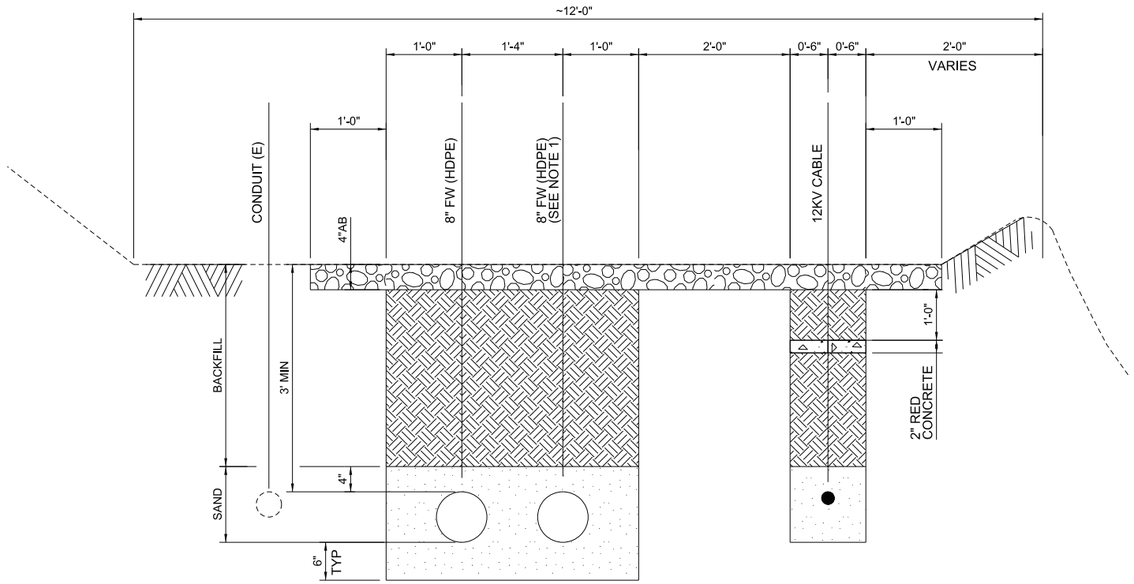

PIPELINE J

J1 SECTION
1"=1'-0"
C-07-69

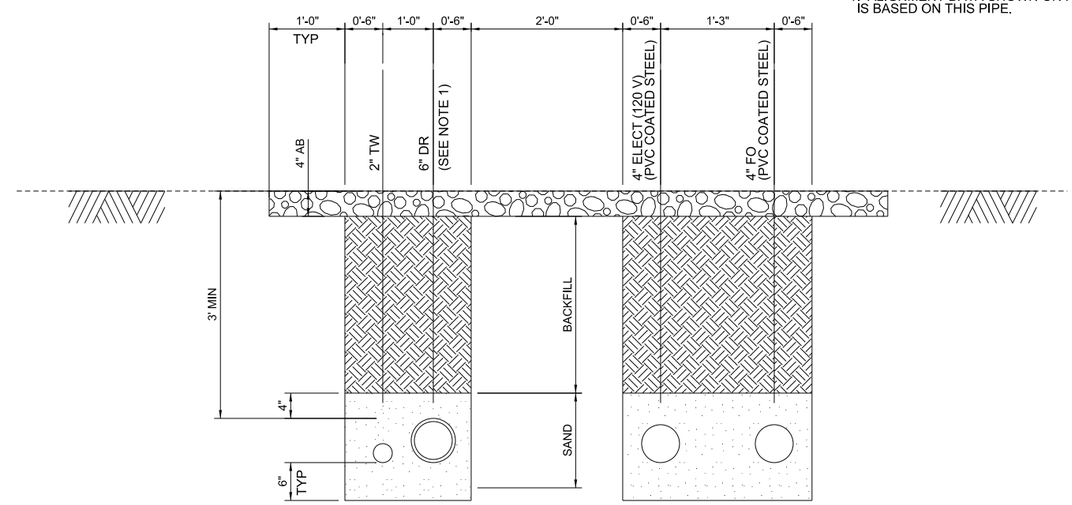

PIPELINE D

D1 SECTION
1"=1'-0"
C-07-79

NOTE:

1. ALIGNMENT DATA SHOWN ON PLAN IS BASED ON THIS PIPE.

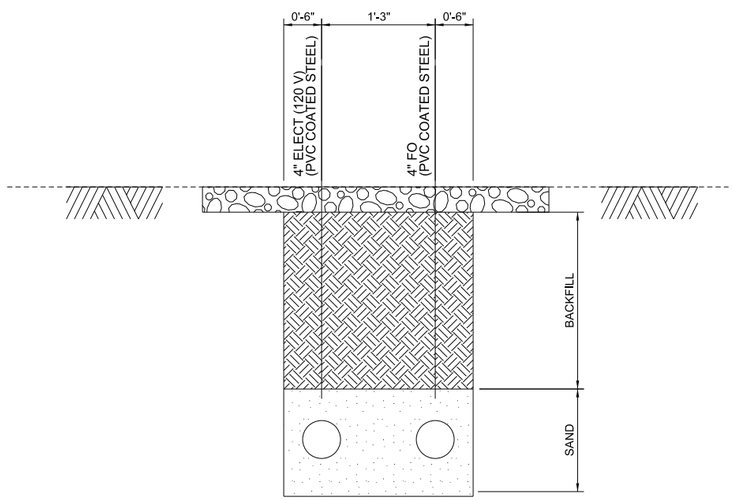

PIPELINE D

D2 SECTION
1"=1'-0"
C-07-79

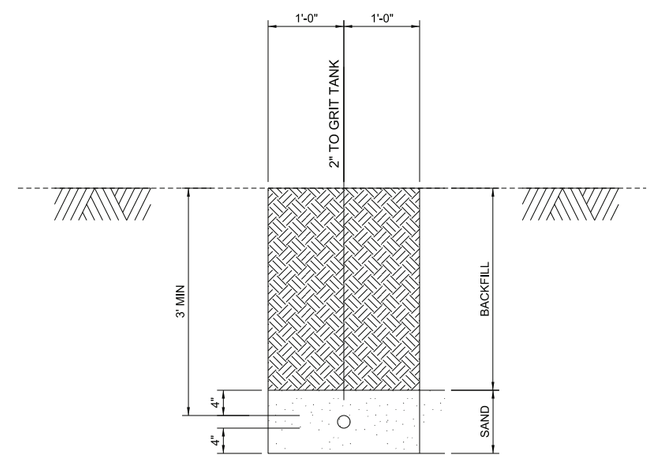

PIPELINE T

T1 SECTION
1"=1'-0"
C-07-81

- DRAFT - NOT FOR CONSTRUCTION

AECOM
2101 WEBSTER STREET SUITE 1000
OAKLAND, CA 94612-3060

PROJECT NO. 60272335

NO.	DATE	DESCRIPTION	GM/SPEC	DWN	CHKD	SUPV	APVD BY
0	9/8/14	PRE-FINAL (90%) DESIGN					

REVISIONS

APPROVED BY

SO	XXXXX
SUPV	PD
DSGN	TL
DWN	TL
CHKD	JM
OK	PD
DATE	9/8/14
SCALES	1" = 1'-0"

TOPOCK GROUNDWATER REMEDIATION PROJECT

PIPELINE SECTIONS

GAS TRANSMISSION & DISTRIBUTION
PACIFIC GAS AND ELECTRIC COMPANY
SAN FRANCISCO, CALIFORNIA

MICROFILM
BILL OF MATL
DWG LIST
SUPSDS
SUPSD BY
SHEET NO. OF SHEETS
C-07-103A
REV 0

N1808

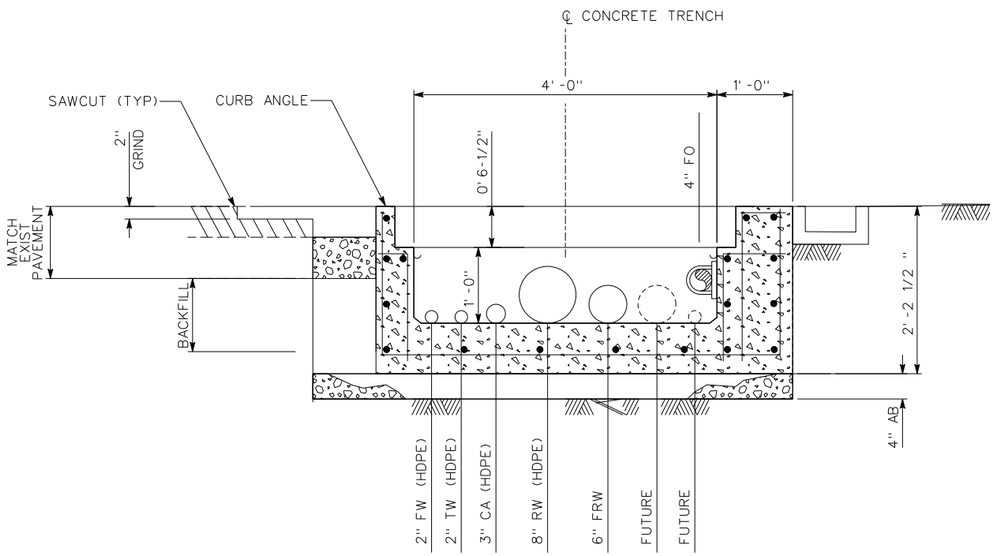

PIPELINE F

F5 SECTION
1"=1'-0"
C-07-70

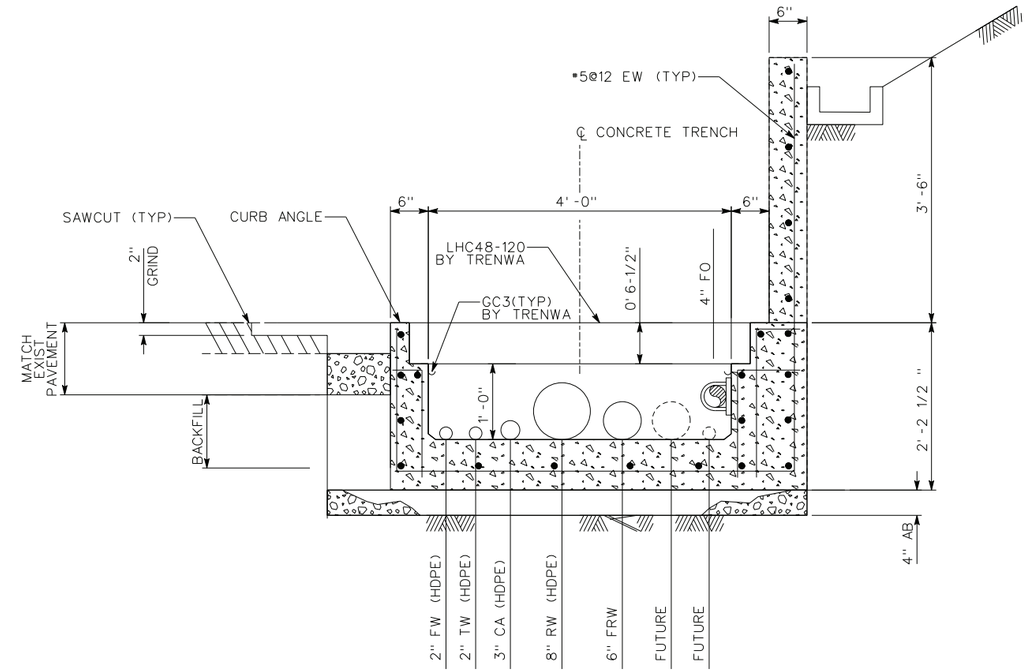

PIPELINE F

F6 SECTION
1"=1'-0"
C-07-70
C-07-71

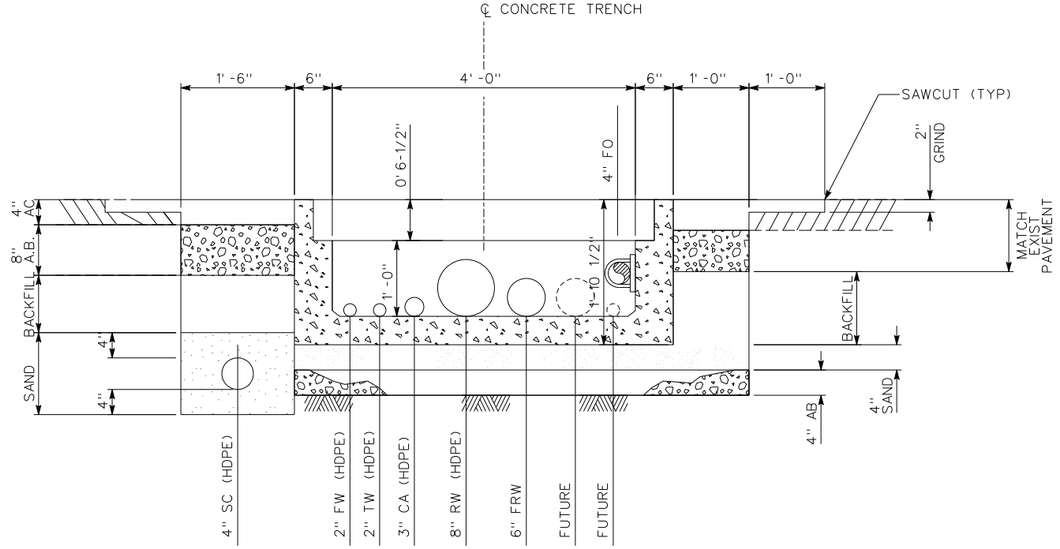

PIPELINE F

F7 SECTION
1"=1'-0"
C-07-71

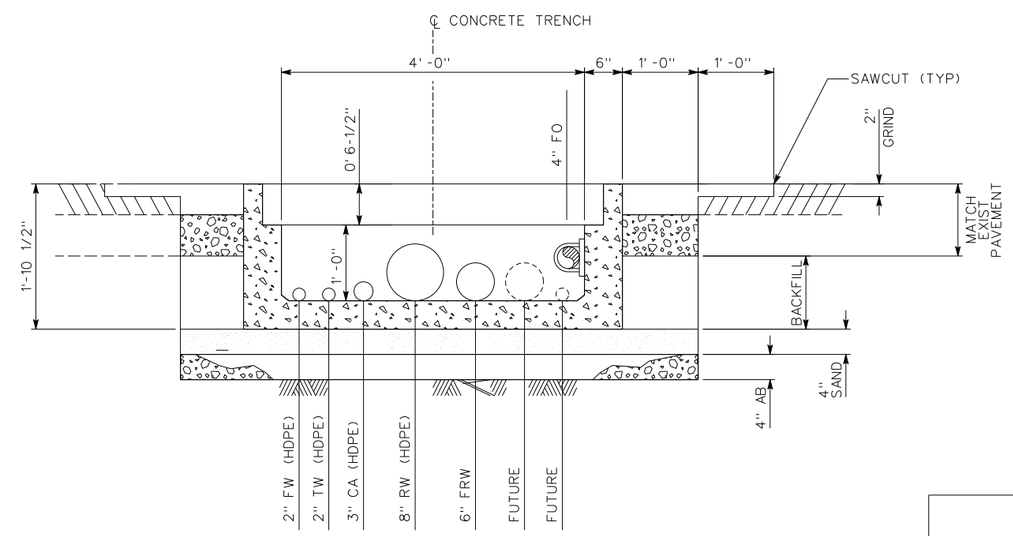

PIPELINE F

F8 SECTION
1"=1'-0"
C-07-72

GRAPHIC SCALE: 1"=1'

- DRAFT - NOT FOR CONSTRUCTION

AECOM
2101 WEBSTER STREET SUITE 1000
OAKLAND, CA 94612-3060
PROJECT NO. 60272335

NO.	DATE	DESCRIPTION	GM/SPEC	DWN	CHKD	SUPV	APVD BY
1	9/8/14	PRE-FINAL (90%) DESIGN					
0	4/5/13	INTERMEDIATE (60%) DESIGN					

REVISIONS

APPROVED BY		
	SO	XXXXX
	SUPV	PD
	DSGN	TL
	DWN	TL
	CHKD	JM
	OK	PD
	DATE	9/8/14
	SCALES	1" = 1'-0"

TOPOCK GROUNDWATER REMEDIATION PROJECT

PIPELINE SECTIONS

GAS TRANSMISSION & DISTRIBUTION
PACIFIC GAS AND ELECTRIC COMPANY
SAN FRANCISCO, CALIFORNIA

MICROFILM	
BILL OF MATL	
DWG LIST	
SUPSDS	
SUPSD BY	
SHEET NO. OF	SHEETS
C-07-104	REV 1

N1808

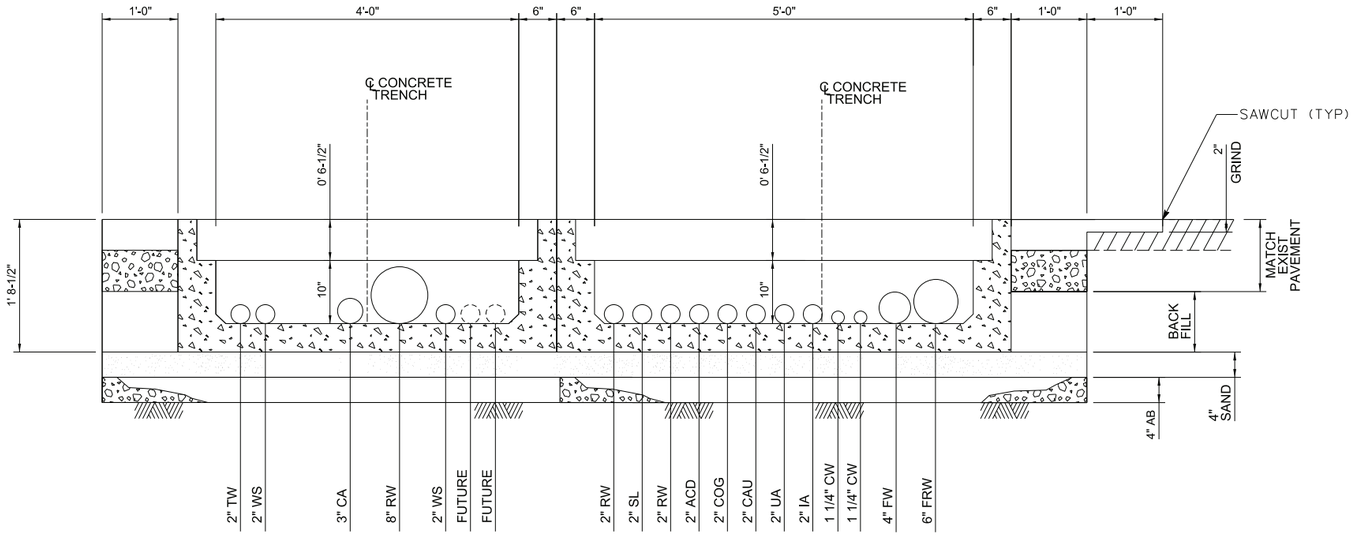

PIPELINE M

M1 SECTION 1"=1'-0"

C-07-75

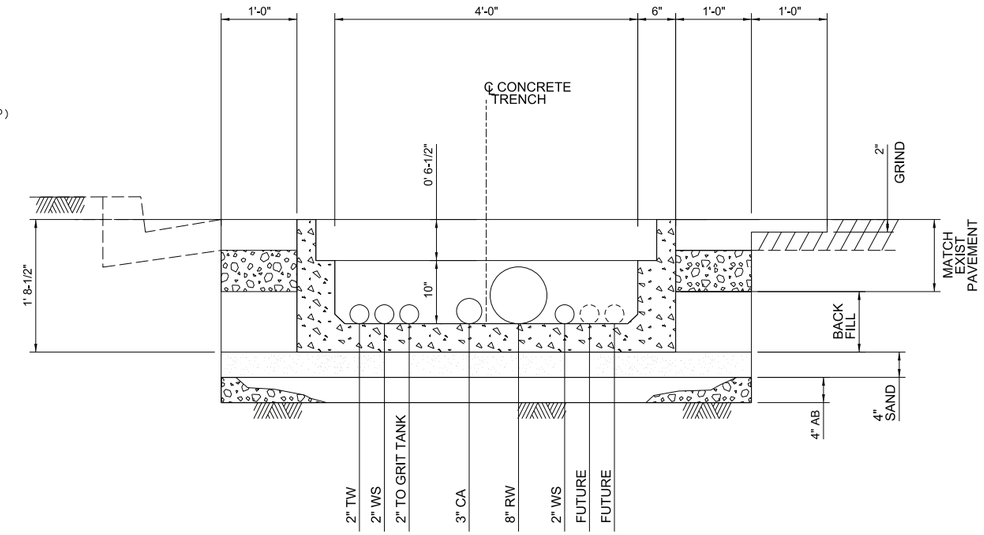

PIPELINE M

M2 SECTION 1"=1'-0"

C-07-75

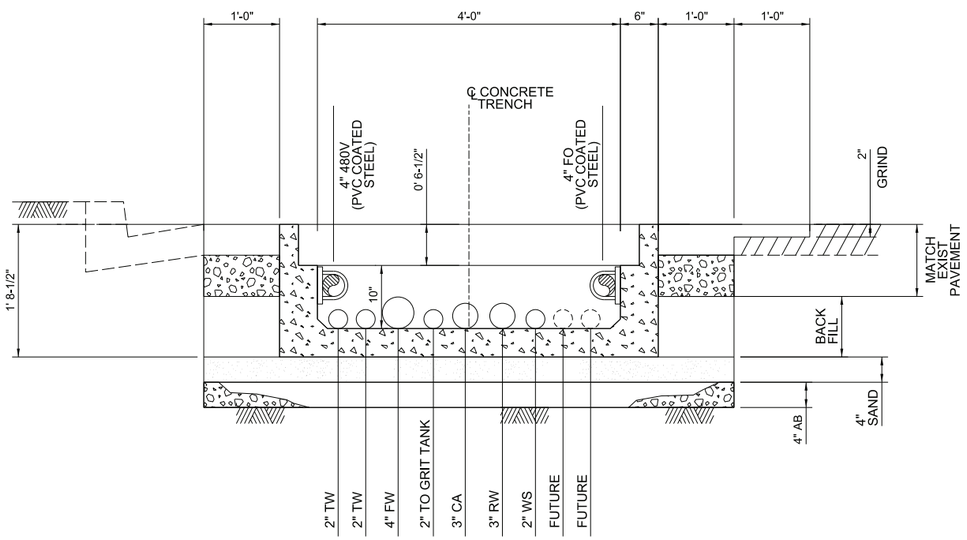

PIPELINE M

M3 SECTION 1"=1'-0"

C-07-75

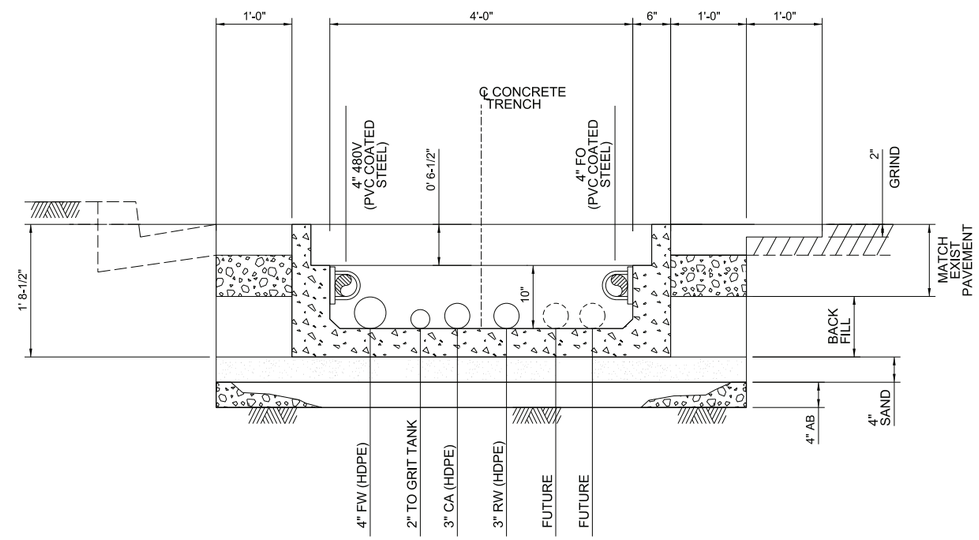

PIPELINE M

M4 SECTION 1"=1'-0"

C-07-75
C-07-76

1 0 1 2

GRAPHIC SCALE: 1"=1'

- DRAFT - NOT FOR CONSTRUCTION

AECOM

2101 WEBSTER STREET SUITE 1000
OAKLAND, CA 94612-3060

PROJECT NO. 60272335

NO.	DATE	DESCRIPTION	GM/SPEC	DWN	CHKD	SUPV	APVD BY
1	9/8/14	PRE-FINAL (90%) DESIGN					
0	4/5/13	INTERMEDIATE (60%) DESIGN					

REVISIONS

APPROVED BY		
	SO	XXXXX
	SUPV	PD
	DSGN	TL
	DWN	GO
	CHKD	JM
	OK	PD
	DATE	9/8/14
	SCALES	1" = 1'-0"

TOPOCK GROUNDWATER REMEDIATION PROJECT

PIPELINE SECTIONS

GAS TRANSMISSION & DISTRIBUTION
PACIFIC GAS AND ELECTRIC COMPANY
SAN FRANCISCO, CALIFORNIA

MICROFILM
BILL OF MATL
DWG LIST
SUPSDS
SUPSD BY

SHEET NO. OF SHEETS

C-07-105 REV 1

N1808

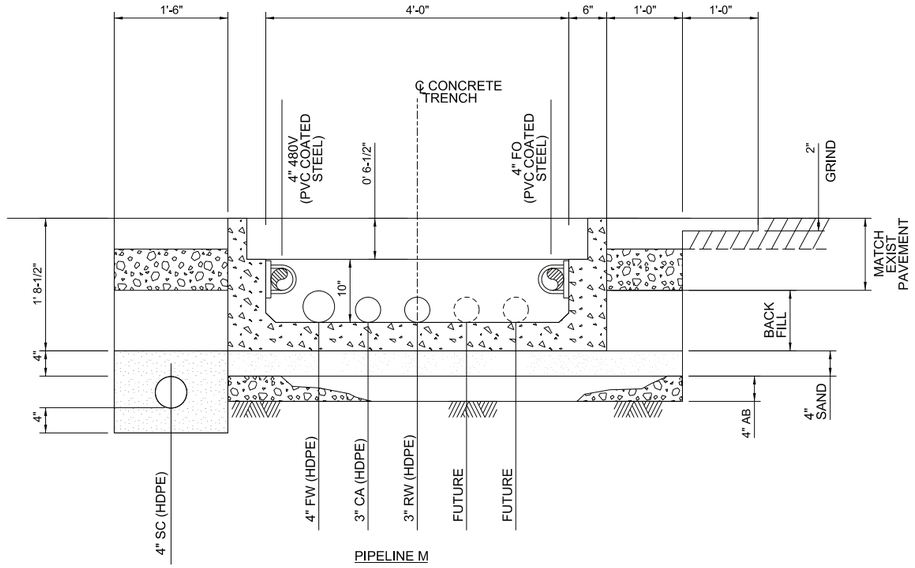

M5 SECTION
1"=1'-0"
C-07-76

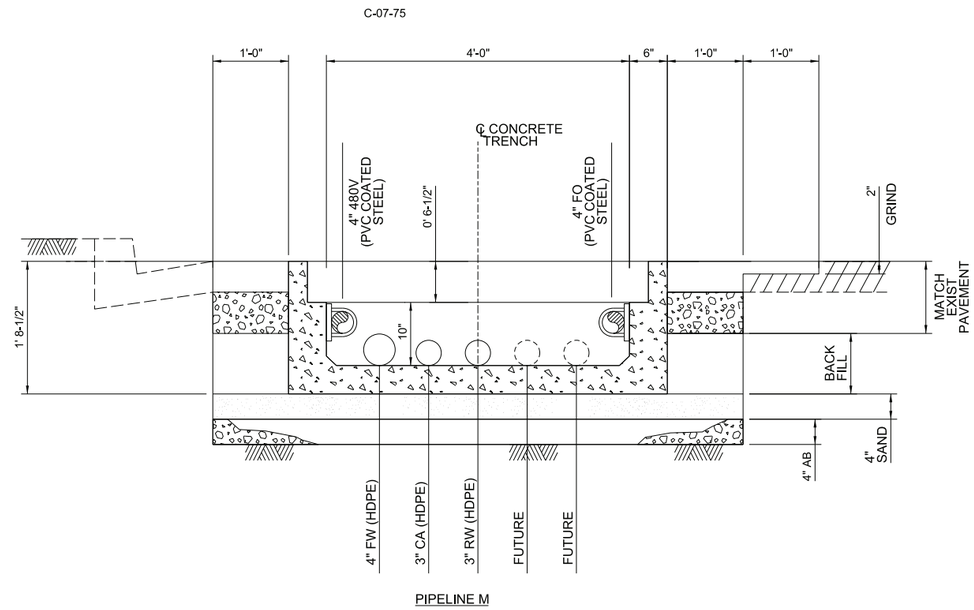

M6 SECTION
1"=1'-0"
C-07-76

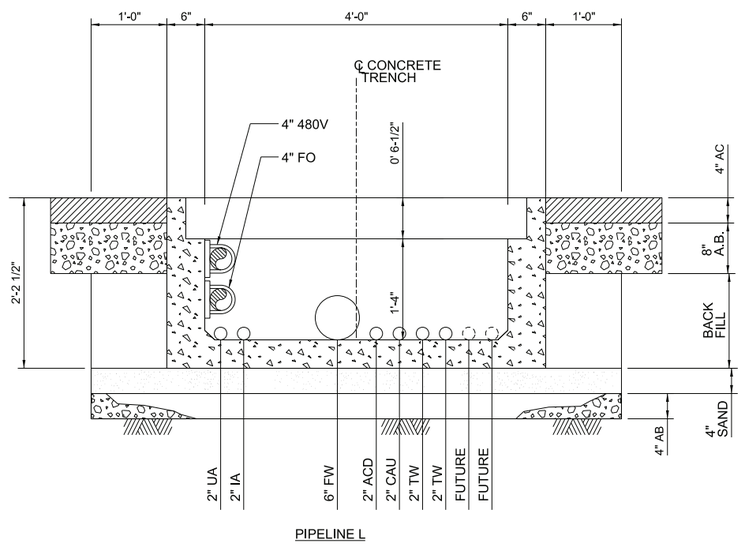

L1 SECTION
1"=1'-0"
C-07-74

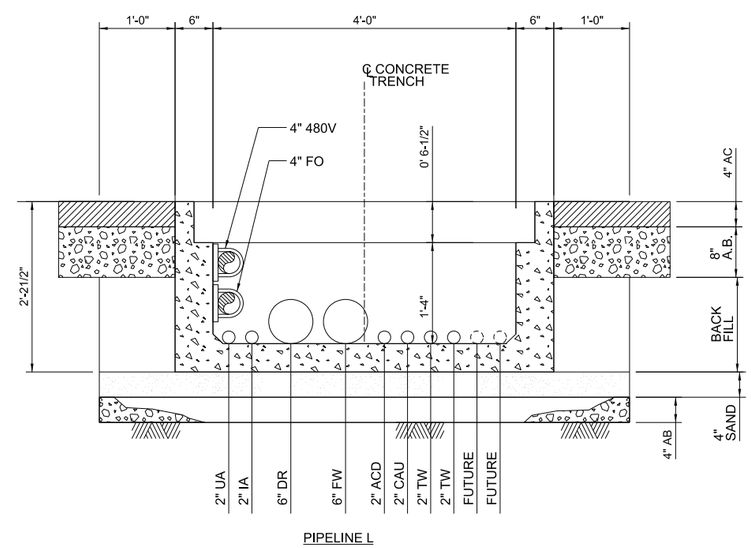

L2 SECTION
1"=1'-0"
C-07-74

GRAPHIC SCALE: 1"=1'

- DRAFT - NOT FOR CONSTRUCTION

AECOM
2101 WEBSTER STREET SUITE 1000
OAKLAND, CA 94612-3060
PROJECT NO. 60272335

NO.	DATE	DESCRIPTION	GM/SPEC	DWN	CHKD	SUPV	APVD BY
1	9/8/14	PRE-FINAL (90%) DESIGN					
0	4/5/13	INTERMEDIATE (60%) DESIGN					

REVISIONS

APPROVED BY		
SO	XXXXX	
SUPV	PD	
DSGN	TL	
DWN	TL	
CHKD	JM	
OK	PD	
DATE	9/8/14	
SCALES	1" = 1'-0"	

TOPOCK GROUNDWATER REMEDIATION PROJECT

PIPELINE SECTIONS

GAS TRANSMISSION & DISTRIBUTION
PACIFIC GAS AND ELECTRIC COMPANY
SAN FRANCISCO, CALIFORNIA

MICROFILM
BILL OF MATL
DWG LIST
SUPSDS
SUPSD BY
SHEET NO. OF SHEETS
C-07-106
REV 1

N1808

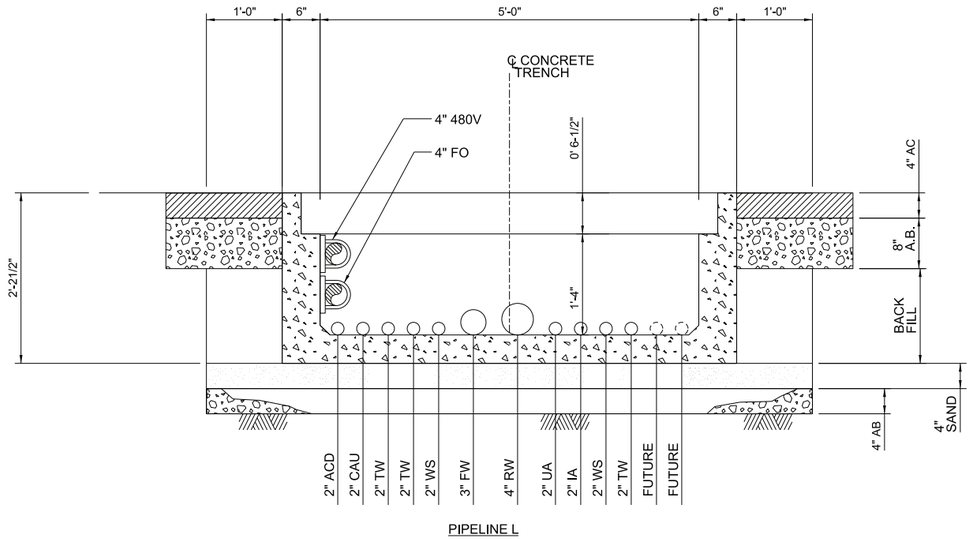

L3 SECTION
1"=1'-0"
C-07-74

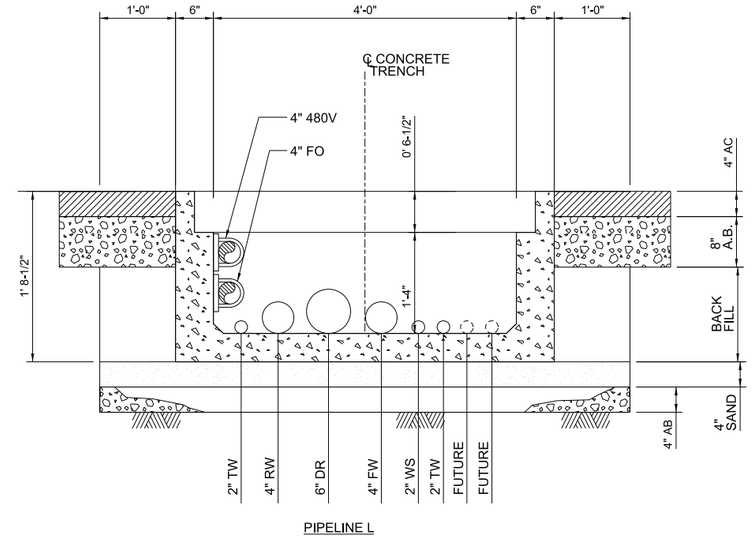

K1 SECTION
1"=1'-0"
C-07-73

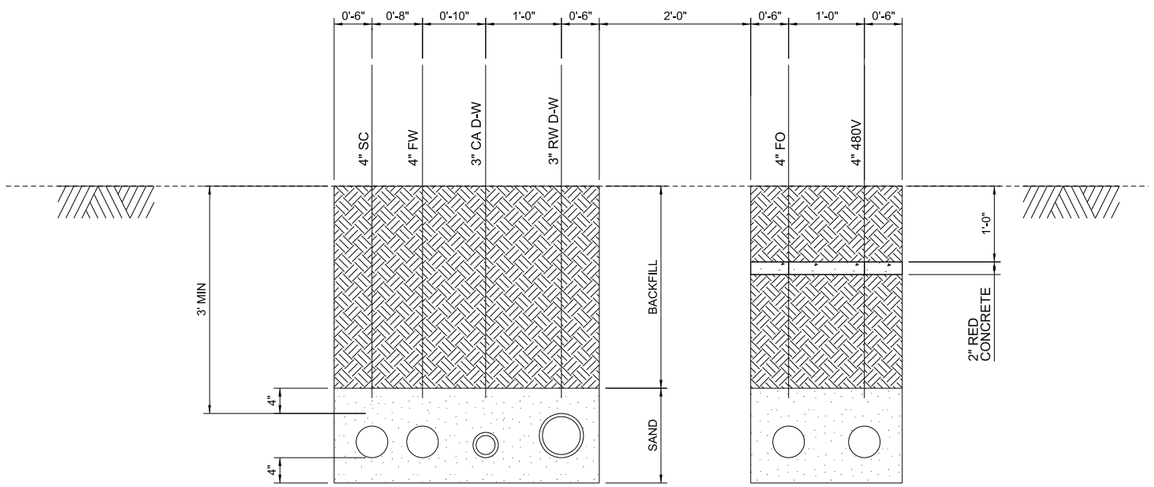

N1 SECTION
1"=1'-0"
C-07-77

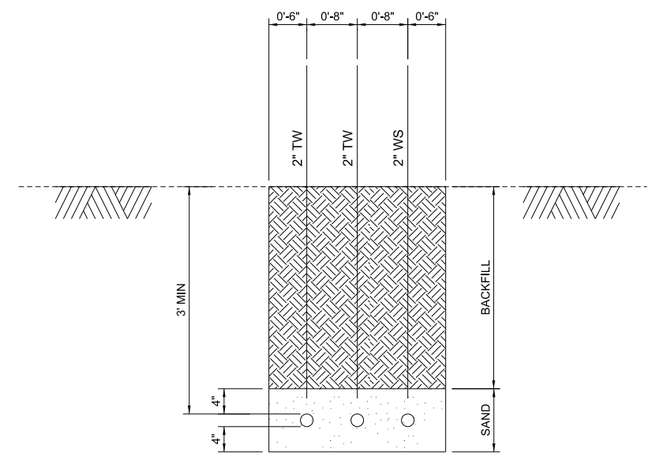

P1 SECTION
1"=1'-0"
C-07-80

1 0 1 2
GRAPHIC SCALE: 1"=1'

- DRAFT - NOT FOR CONSTRUCTION

AECOM
2101 WEBSTER STREET SUITE 1000
OAKLAND, CA 94612-3060
PROJECT NO. 60272335

NO.	DATE	DESCRIPTION	GM/SPEC	DWN	CHKD	SUPV	APVD BY
1	9/8/14	PRE-FINAL (90%) DESIGN					
0	4/5/13	INTERMEDIATE (60%) DESIGN					

REVISIONS

APPROVED BY
SO XXXXX
SUPV PD
DSGN TL
DWN GO
CHKD JM
OK PD
DATE 9/8/14
SCALES 1" = 1'-0"

TOPOCK GROUNDWATER REMEDIATION PROJECT

PIPELINE SECTIONS

GAS TRANSMISSION & DISTRIBUTION
PACIFIC GAS AND ELECTRIC COMPANY
SAN FRANCISCO, CALIFORNIA

MICROFILM
BILL OF MATL
DWG LIST
SUPSDS
SUPSD BY
SHEET NO. OF SHEETS
C-07-107
REV 1

N1808

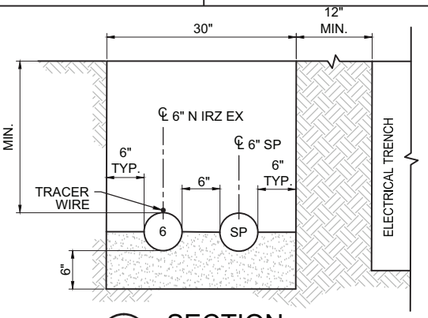

C1 SECTION
1"=1'-0"
C-07-39

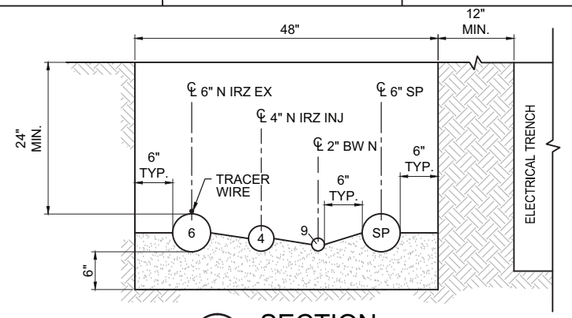

C2 SECTION
1"=1'-0"
C-07-39,-40

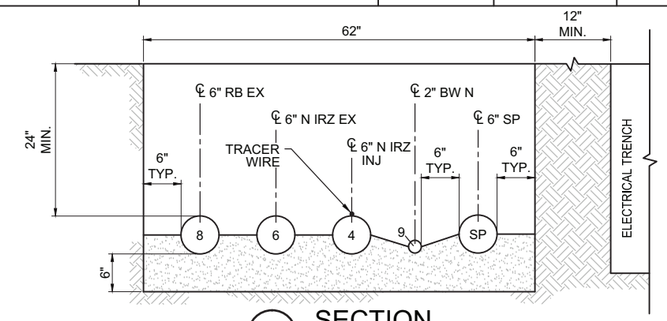

C3 SECTION
1"=1'-0"
C-07-40,-41

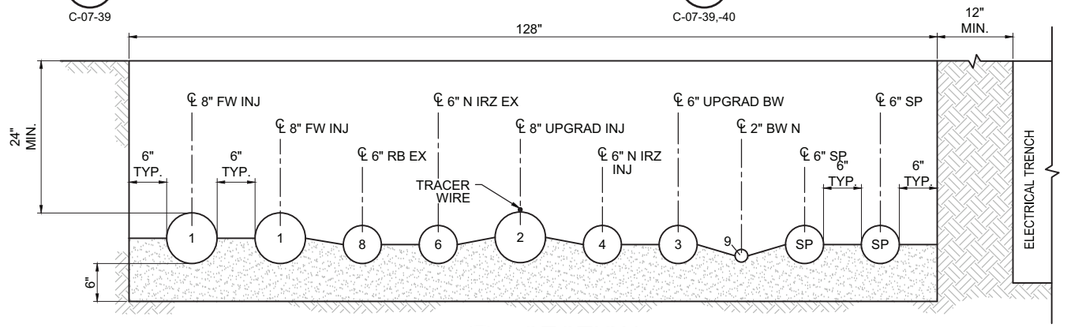

C4 SECTION
1"=1'-0"
C-07-41

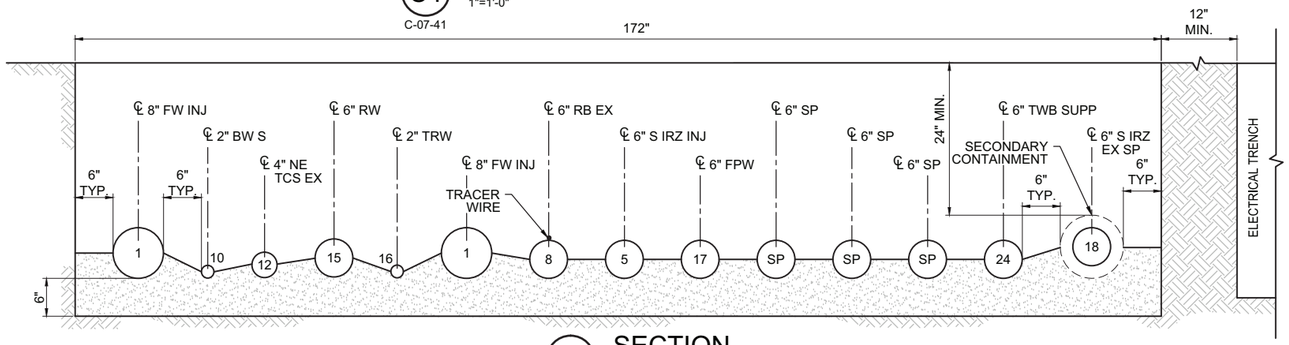

C5 SECTION
1"=1'-0"
C-07-43

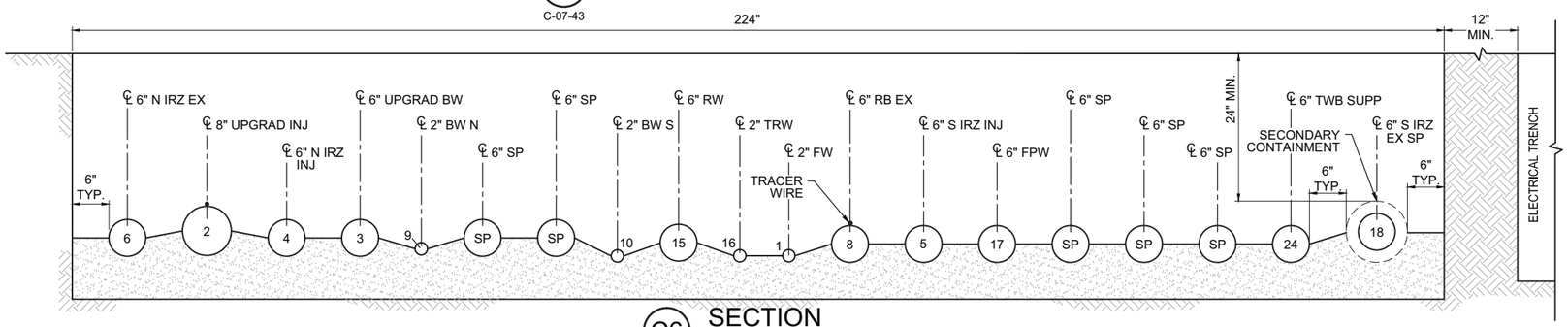

C6 SECTION
1"=1'-0"
C-07-41

PIPE ID	SERVICE
1	FRESH WATER INJECTION LOOP
2	UPGRADIENT INJECTION
3	UPGRADIENT BACKWASH
4	NORTH IRZ INJECTION (1-22)
5	SOUTH IRZ INJECTION (24-40)
6	NORTHERN IRZ EXTRACTION
7	IRZ-23 EXTRACTION
8	RIVERBANK EXTRACTION
9	BACKWASH NORTH
10	BACKWASH SOUTH
11	EAST RAVINE EXTRACTION WELL NETWORK HEADER
12	NORTHEAST OF TCS EXTRACTION WELL NETWORK HEADER
13	TCS INJECTION
14	TCS BACKWASH
15	REMEDY WASTEWATER
16	TREATED WATER
17	FIRE PROTECTION WATER
18	SOUTH IRZ EXTRACTION SPARE
19	EAST RAVINE ER-6 EXTRACTION
20	480V POWER CONDUIT
21	COMMUNICATIONS CONDUIT
22	12kV POWER
23	#2/0 BARE COPPER GROUND
24	TWB SUPPLEMENTAL FLOW
25	TWB EXTRACTION WELL NETWORK HEADER
CA	CARBON AMENDED WATER
PO	POTABLE WATER
SP	SPARE PIPE
SP(e)	SPARE ELECTRICAL CONDUIT

NOTES:

1. SAND SHALL BE USED FROM THE BASE OF THE TRENCH TO 6 INCHES ABOVE THE TOP OF PIPES. SOILS FROM THE TRENCH EXCAVATION SHALL BE MOISTURE CONDITIONED AND USED AS BACKFILL. COMPACT TO 95% RELATIVE COMPACTION TO 12 INCHES BELOW GRADE. FOUR INCHES OF AS-CLASS 2 MATERIAL SHALL BE PLACED ON TOP OF THE COMPACTED SOIL FOLLOWED BY 4 INCHES OF AB-CLASS 2. THE ROADBASE SHALL BE TOPPED WITH A 2-INCH BASE COURSE LAYER AND CAPPED WITH A 2-INCH HMA PG 70-10 SURFACE COURSE.
2. PIPE SUPPORTS AND CLEANOUTS NOT SHOWN FOR CLARITY.
3. ALL COVERS SHALL BE TRAFFIC RATED.
4. CASING SPACERS NOT SHOWN FOR CLARITY.
5. PIPE BEDDING SHALL EXTEND HALF WAY UP THE PIPES PER THE SPECIFICATIONS.

- DRAFT -
NOT FOR CONSTRUCTION

ETIC ENGINEERING

ARCADIS

NO.	DATE	DESCRIPTION	GM/SPEC	DWN	CHKD	SUPV	APVD BY
1	09/08/14	PRE-FINAL (90%) DESIGN		AJW	BAS	JPB	JEF
0	04/05/13	INTERMEDIATE (60%) DESIGN		AJW	KLD	JPB	JEF

REVISIONS

APPROVED BY: JEF

SO
SUPV JPB
DSGN BAS
DWN AJW
CHKD JPB
OK JEF
DATE 09/08/14
SCALES 1" = 1'-0"

TOPOCK GROUNDWATER REMEDIATION PROJECT

TRENCH SECTIONS

GAS TRANSMISSION & DISTRIBUTION
PACIFIC GAS AND ELECTRIC COMPANY
SAN FRANCISCO, CALIFORNIA

MICROFILM
BILL OF MATL
DWG LIST
SUPSDS
SUPSD BY
SHEET NO. of SHEETS
C-07-108
REV 1

09/27/2014, 15:32, G:\Graphics\ART\TOPOCK-01\Post 90%\C-07-108 to 122_PipeTrenchDetails.dwg, Tab: C-07-108

N1808

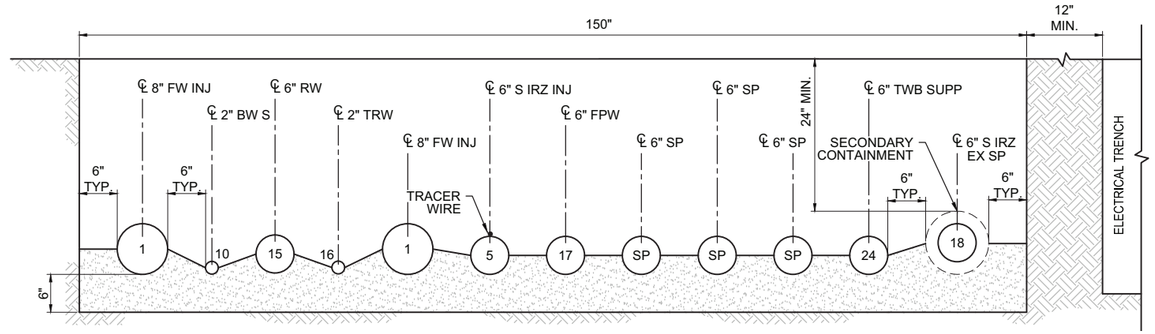

C7 SECTION
1"=1'-0"
C-07-44

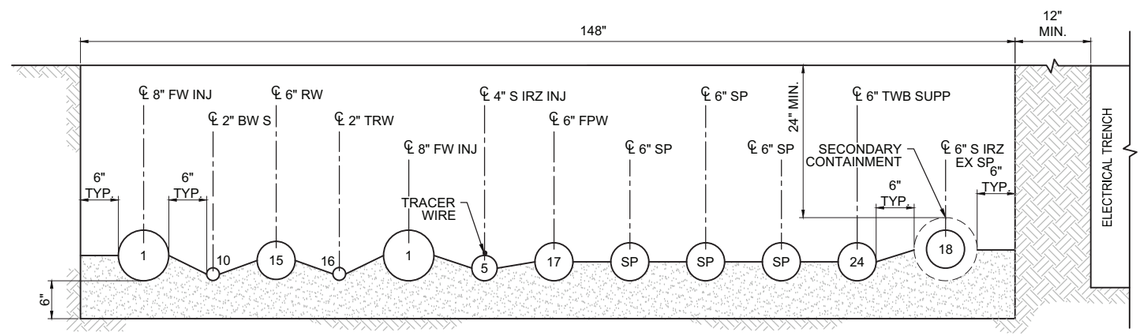

C8 SECTION
1"=1'-0"
C-07-44,-45,-46

NOTES:

1. SAND SHALL BE USED FROM THE BASE OF THE TRENCH TO 6 INCHES ABOVE THE TOP OF PIPES. SOILS FROM THE TRENCH EXCAVATION SHALL BE MOISTURE CONDITIONED AND USED AS BACKFILL. COMPACT TO 95% RELATIVE COMPACTION TO 12 INCHES BELOW GRADE. FOUR INCHES OF AS-CLASS 2 MATERIAL SHALL BE PLACED ON TOP OF THE COMPACTED SOIL FOLLOWED BY 4 INCHES OF AB-CLASS 2. THE ROADBASE SHALL BE TOPPED WITH A 2-INCH BASE COURSE LAYER AND CAPPED WITH A 2-INCH HMA PG 70-10 SURFACE COURSE.
2. PIPE SUPPORTS AND CLEANOUTS NOT SHOWN FOR CLARITY.
3. ALL COVERS SHALL BE TRAFFIC RATED.
4. CASING SPACERS NOT SHOWN FOR CLARITY.
5. PIPE BEDDING SHALL EXTEND HALF WAY UP THE PIPES PER THE SPECIFICATIONS.

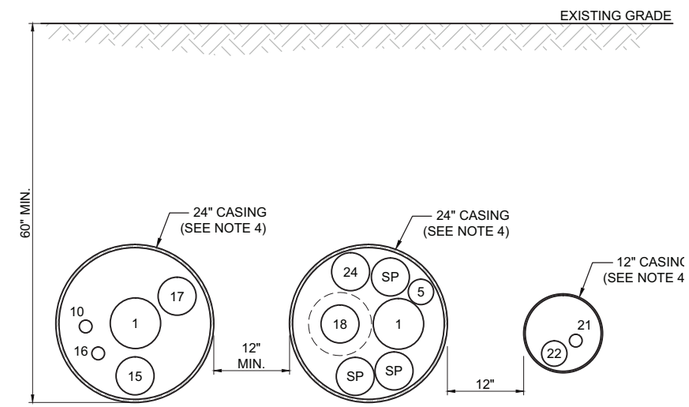

C9 SECTION
1"=1'-0"
C-07-46,-47

PIPE ID	SERVICE
1	FRESH WATER INJECTION LOOP
2	UPGRADIENT INJECTION
3	UPGRADIENT BACKWASH
4	NORTH IRZ INJECTION (1-22)
5	SOUTH IRZ INJECTION (24-40)
6	NORTHERN IRZ EXTRACTION
7	IRZ-23 EXTRACTION
8	RIVERBANK EXTRACTION
9	BACKWASH NORTH
10	BACKWASH SOUTH
11	EAST RAVINE EXTRACTION WELL NETWORK HEADER
12	NORTHEAST OF TCS EXTRACTION WELL NETWORK HEADER
13	TCS INJECTION
14	TCS BACKWASH
15	REMEDY WASTEWATER
16	TREATED WATER
17	FIRE PROTECTION WATER
18	SOUTH IRZ EXTRACTION SPARE
19	EAST RAVINE ER-6 EXTRACTION
20	480V POWER CONDUIT
21	COMMUNICATIONS CONDUIT
22	12kV POWER
23	#2/0 BARE COPPER GROUND
24	TWB SUPPLEMENTAL FLOW
25	TWB EXTRACTION WELL NETWORK HEADER
CA	CARBON AMENDED WATER
PO	POTABLE WATER
SP	SPARE PIPE
SP(e)	SPARE ELECTRICAL CONDUIT

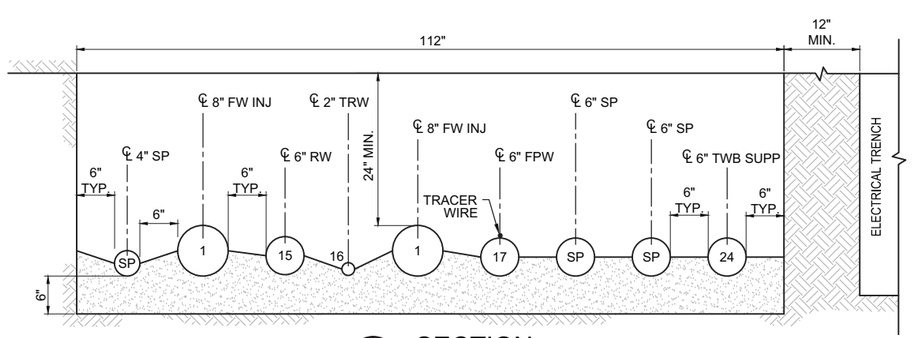

C10 SECTION
1"=1'-0"
C-07-47

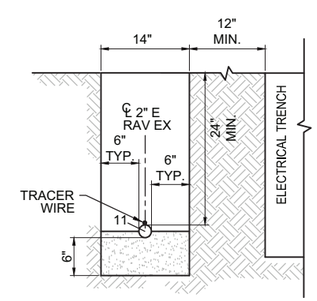

C11 SECTION
1"=1'-0"
C-07-47,-48

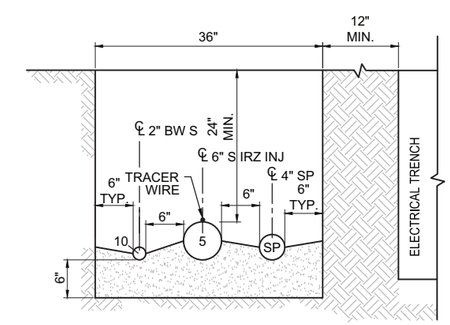

C13 SECTION
1"=1'-0"
C-07-42

- DRAFT -
NOT FOR CONSTRUCTION

ETIC ENGINEERING

ARCADIS

NO.	DATE	DESCRIPTION	GM/SPEC	DWN	CHKD	SUPV	APVD BY
1	09/08/14	PRE-FINAL (90%) DESIGN		AJW	BAS	JPB	JEF
0	04/05/13	INTERMEDIATE (60%) DESIGN		AJW	KLD	JPB	JEF

REVISIONS

APPROVED BY: JEF

SO
SUPV JPB
DSGN BAS
DWN AJW
CHKD JPB
OK JEF
DATE 09/08/14
SCALES 1" = 1'-0"

TOPOCK GROUNDWATER REMEDIATION PROJECT

TRENCH SECTIONS

GAS TRANSMISSION & DISTRIBUTION
PACIFIC GAS AND ELECTRIC COMPANY
SAN FRANCISCO, CALIFORNIA

MICROFILM
BILL OF MATL
DWG LIST
SUPSDS
SUPSD BY
SHEET NO. of SHEETS
C-07-109
REV 1

N1808

08/27/2014, 15:32, G:\Graphics\ARI\TOPOCK-01\Post 90%\C-07-108 to 122_Pipe Trench Details.dwg, Tab: C-07-109

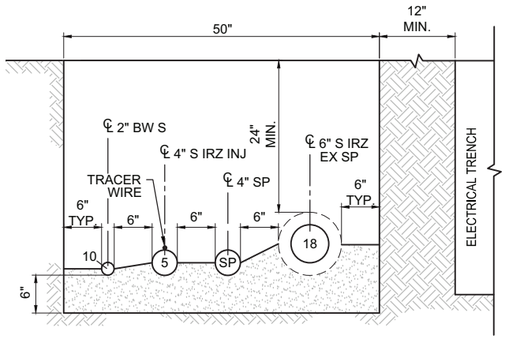

C13 C14 C15 C16 C17 **SECTION**
1"=1'-0"
C-07-42,49,-50,-51

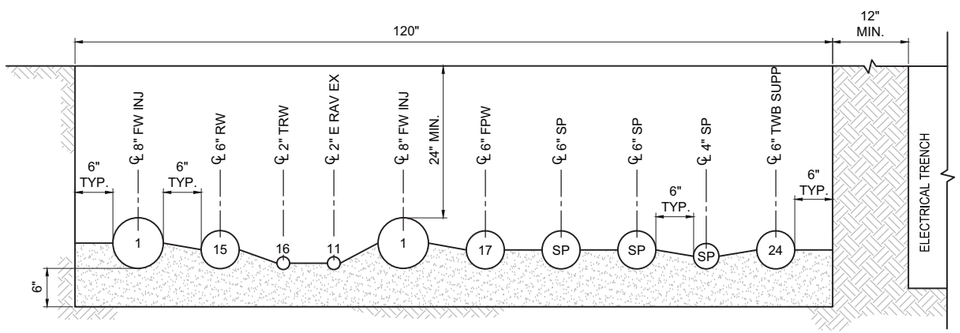

F1 **SECTION**
1"=1'-0"
C-07-52

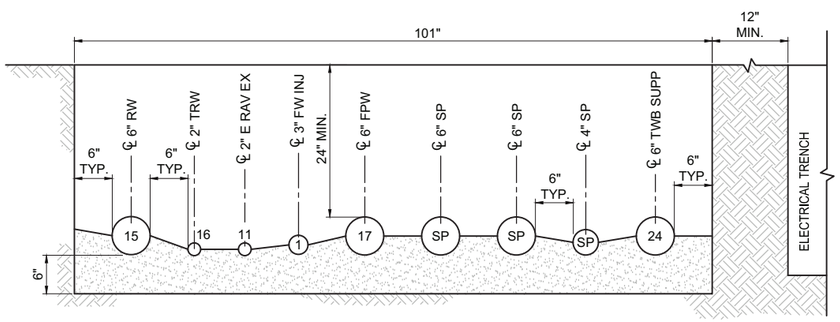

F2 **SECTION**
1"=1'-0"
C-07-52

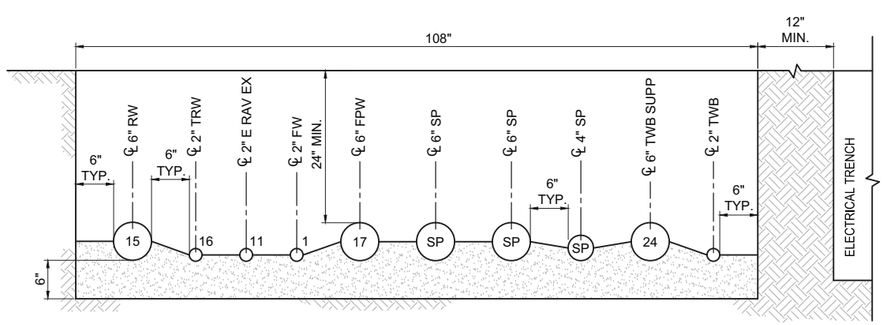

F3 **SECTION**
1"=1'-0"
C-07-52,-53

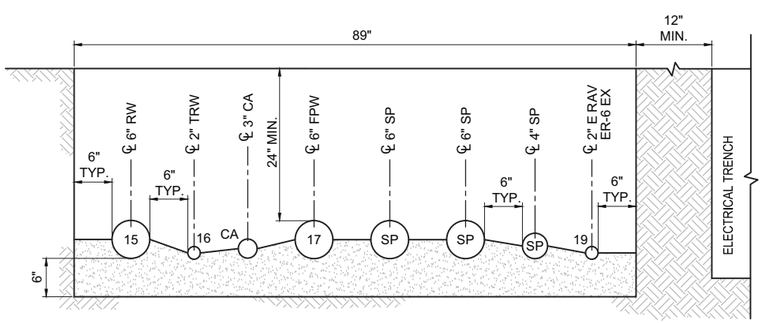

F4 **SECTION**
1"=1'-0"
C-07-52,-53

PIPE ID	SERVICE
1	FRESH WATER INJECTION LOOP
2	UPGRADIENT INJECTION
3	UPGRADIENT BACKWASH
4	NORTH IRZ INJECTION (1-22)
5	SOUTH IRZ INJECTION (24-40)
6	NORTHERN IRZ EXTRACTION
7	IRZ-23 EXTRACTION
8	RIVERBANK EXTRACTION
9	BACKWASH NORTH
10	BACKWASH SOUTH
11	EAST RAVINE EXTRACTION WELL NETWORK HEADER
12	NORTHEAST OF TCS EXTRACTION WELL NETWORK HEADER
13	TCS INJECTION
14	TCS BACKWASH
15	REMEDY WASTEWATER
16	TREATED WATER
17	FIRE PROTECTION WATER
18	SOUTH IRZ EXTRACTION SPARE
19	EAST RAVINE ER-6 EXTRACTION
20	480V POWER CONDUIT
21	COMMUNICATIONS CONDUIT
22	12kV POWER
23	#2/0 BARE COPPER GROUND
24	TWB SUPPLEMENTAL FLOW
25	TWB EXTRACTION WELL NETWORK HEADER
CA	CARBON AMENDED WATER
PO	POTABLE WATER
SP	SPARE PIPE
SP(e)	SPARE ELECTRICAL CONDUIT

NOTES:

1. SAND SHALL BE USED FROM THE BASE OF THE TRENCH TO 6 INCHES ABOVE THE TOP OF PIPES. SOILS FROM THE TRENCH EXCAVATION SHALL BE MOISTURE CONDITIONED AND USED AS BACKFILL. COMPACT TO 95% RELATIVE COMPACTION TO 12 INCHES BELOW GRADE. FOUR INCHES OF AS-CLASS 2 MATERIAL SHALL BE PLACED ON TOP OF THE COMPACTED SOIL FOLLOWED BY 4 INCHES OF AB-CLASS 2. THE ROADBASE SHALL BE TOPPED WITH A 2-INCH BASE COURSE LAYER AND CAPPED WITH A 2-INCH HMA PG 70-10 SURFACE COURSE.
2. PIPE SUPPORTS AND CLEANOUTS NOT SHOWN FOR CLARITY.
3. ALL COVERS SHALL BE TRAFFIC RATED.
4. PIPE BEDDING SHALL EXTEND HALF WAY UP THE PIPES PER THE SPECIFICATIONS.

- DRAFT -
NOT FOR CONSTRUCTION

ETIC ENGINEERING

ARCADIS

NO.	DATE	DESCRIPTION	GM/SPEC	DWN	CHKD	SUPV	APVD BY
1	09/08/14	PRE-FINAL (90%) DESIGN		AJW	BAS	JPB	JEF
0	04/05/13	INTERMEDIATE (60%) DESIGN		AJW	KLD	JPB	JEF

REVISIONS

APPROVED BY: JEF

SO
SUPV JPB
DSGN BAS
DWN AJW
CHKD JPB
OK JEF
DATE 09/08/14
SCALES 1" = 1'-0"

TOPOCK GROUNDWATER REMEDIATION PROJECT

TRENCH SECTIONS

GAS TRANSMISSION & DISTRIBUTION
PACIFIC GAS AND ELECTRIC COMPANY
SAN FRANCISCO, CALIFORNIA

MICROFILM
BILL OF MATL
DWG LIST
SUPSDS
SUPSD BY
SHEET NO. of SHEETS
C-07-110
REV 1

N1808

09/27/2014, 15:32, G:\Graphics\ARTOPOCK-01\Post 90%\C-07-108 to 122_Pipe TrenchDetails.dwg, Tab: C-07-110

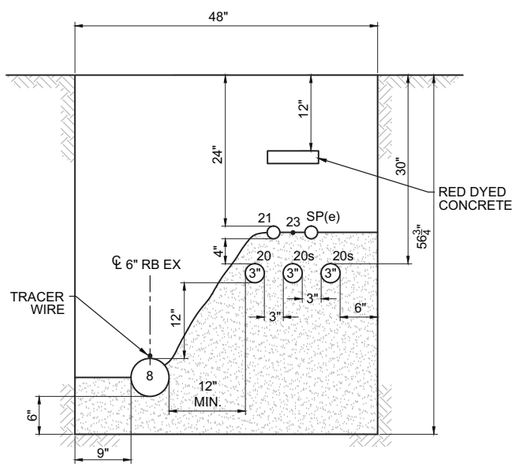

G1 G5 SECTION
1"=1'-0"
C-07-54,-55,-56,-57,-58

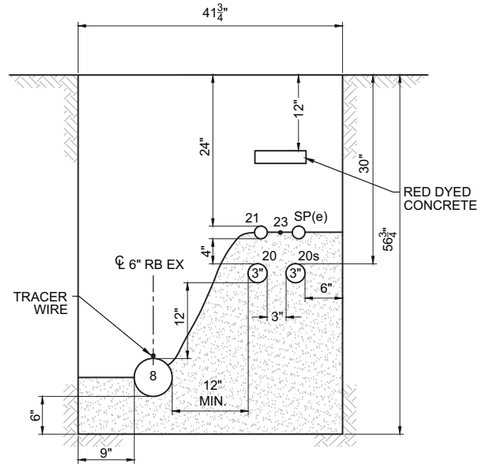

G2 G4 SECTION
1"=1'-0"
C-07-54,-55,-56,-57,-58

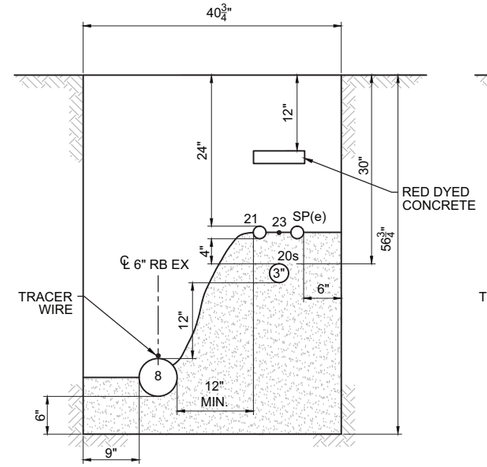

G3 SECTION
1"=1'-0"
C-07-54,-55,-56,-57,-58

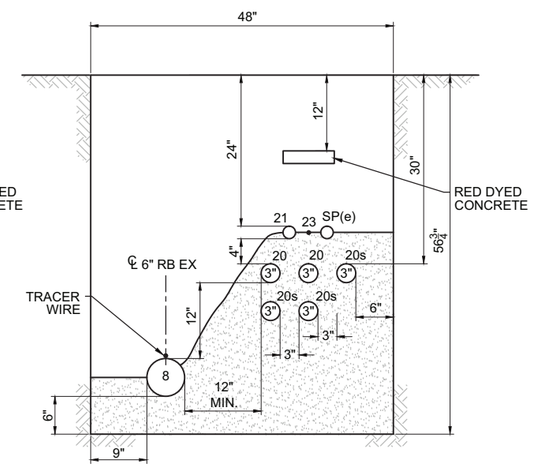

G6 SECTION
1"=1'-0"
C-07-54,-55,-56,-57,-58

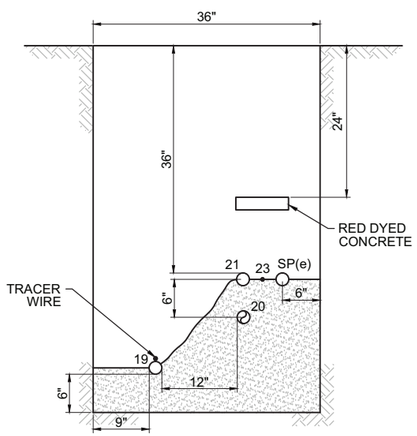

C18 SECTION
1"=1'-0"
C-07-59

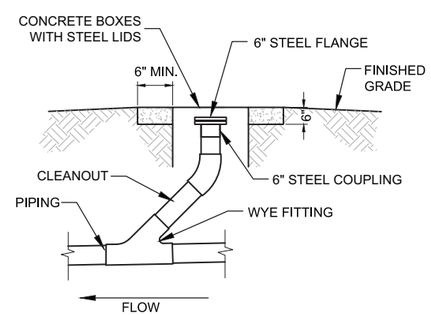

CO SECTION
NOT TO SCALE

PIPE ID	SERVICE
1	FRESH WATER INJECTION LOOP
2	UPGRADIENT INJECTION
3	UPGRADIENT BACKWASH
4	NORTH IRZ INJECTION (1-22)
5	SOUTH IRZ INJECTION (24-40)
6	NORTHERN IRZ EXTRACTION
7	IRZ-23 EXTRACTION
8	RIVERBANK EXTRACTION
9	BACKWASH NORTH
10	BACKWASH SOUTH
11	EAST RAVINE EXTRACTION WELL NETWORK HEADER
12	NORTHEAST OF TCS EXTRACTION WELL NETWORK HEADER
13	TCS INJECTION
14	TCS BACKWASH
15	REMEDY WASTEWATER
16	TREATED WATER
17	FIRE PROTECTION WATER
18	SOUTH IRZ EXTRACTION SPARE
19	EAST RAVINE ER-6 EXTRACTION
20	480V POWER CONDUIT
21	COMMUNICATIONS CONDUIT
22	12kV POWER
23	#2/0 BARE COPPER GROUND
24	TWB SUPPLEMENTAL FLOW
25	TWB EXTRACTION WELL NETWORK HEADER
CA	CARBON AMENDED WATER
PO	POTABLE WATER
SP	SPARE PIPE
SP(e)	SPARE ELECTRICAL CONDUIT

NOTES:

1. SAND SHALL BE USED FROM THE BASE OF THE TRENCH TO 6 INCHES ABOVE THE TOP OF PIPES. SOILS FROM THE TRENCH EXCAVATION SHALL BE MOISTURE CONDITIONED AND USED AS BACKFILL. COMPACT TO 95% RELATIVE COMPACTION TO 12 INCHES BELOW GRADE. FOUR INCHES OF AS-CLASS 2 MATERIAL SHALL BE PLACED ON TOP OF THE COMPACTED SOIL FOLLOWED BY 4 INCHES OF AB-CLASS 2. THE ROADBASE SHALL BE TOPPED WITH A 2-INCH BASE COURSE LAYER AND CAPPED WITH A 2-INCH HMA PG 70-10 SURFACE COURSE.
2. PIPE SUPPORTS AND CLEANOUTS NOT SHOWN FOR CLARITY.
3. ALL COVERS SHALL BE TRAFFIC RATED.
4. CASING SPACERS NOT SHOWN FOR CLARITY.
5. PIPE BEDDING SHALL EXTEND HALF WAY UP THE PIPES PER THE SPECIFICATIONS.

ELECTRICAL NOTES:

1. SEE CONDUIT AND CABLE SCHEDULES AND SINGLE LINE DIAGRAMS ON SHEETS E-00-05 THRU E-00-13.
2. BEDDING SHALL EXTEND HALF WAY UP TOP CONDUIT PER THE SPECIFICATIONS.

- DRAFT -
NOT FOR CONSTRUCTION

ETIC ENGINEERING

ARCADIS

NO.	DATE	DESCRIPTION	GM/SPEC	DWN	CHKD	SUPV	APVD BY
1	09/08/14	PRE-FINAL (90%) DESIGN		AJW	BAS	JPB	JEF
0	04/05/13	INTERMEDIATE (60%) DESIGN		AJW	KLD	JPB	JEF

REVISIONS

APPROVED BY: JEF

SO	
SUPV	JPB
DSGN	BAS
DWN	AJW
CHKD	JPB
OK	JEF
DATE	09/08/14
SCALES	1" = 1'-0"

TOPOCK GROUNDWATER REMEDIATION PROJECT

TRENCH SECTIONS

GAS TRANSMISSION & DISTRIBUTION
PACIFIC GAS AND ELECTRIC COMPANY
SAN FRANCISCO, CALIFORNIA

MICROFILM
BILL OF MATL
DWG LIST
SUPSDS
SUPSD BY
SHEET NO. of SHEETS
C-07-111
REV 1

N1808

08/27/2014, 15:33, G:\Graphics\AR\TOPOCK-01\Post 90%\C-07-108 to 122_Pipe Trench\Details.dwg, Tab: C-07-111

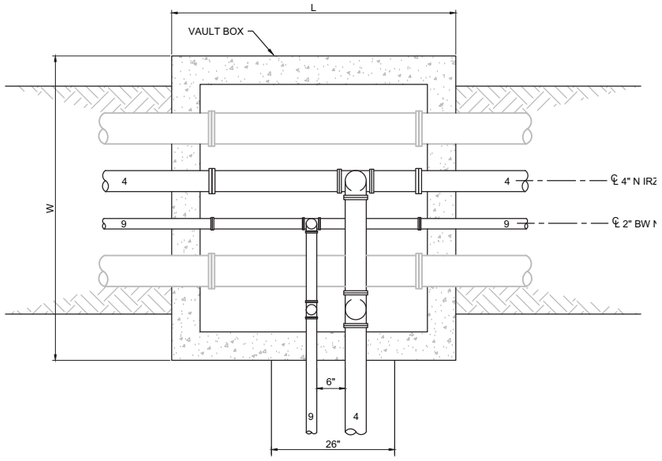

CONNECTION TO PROPOSED AND FUTURE PROVISIONAL INJECTION WELLS

1 DETAIL
3/4"=1'-0"
C-07-39

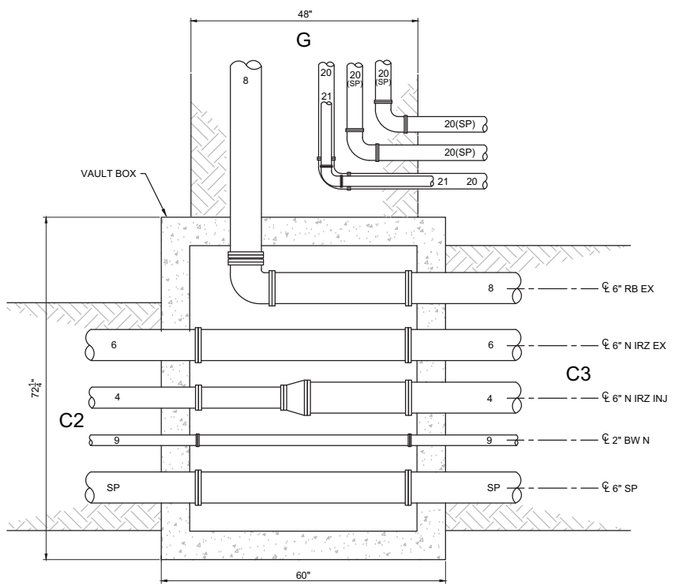

2 DETAIL
3/4"=1'-0"
C-07-40

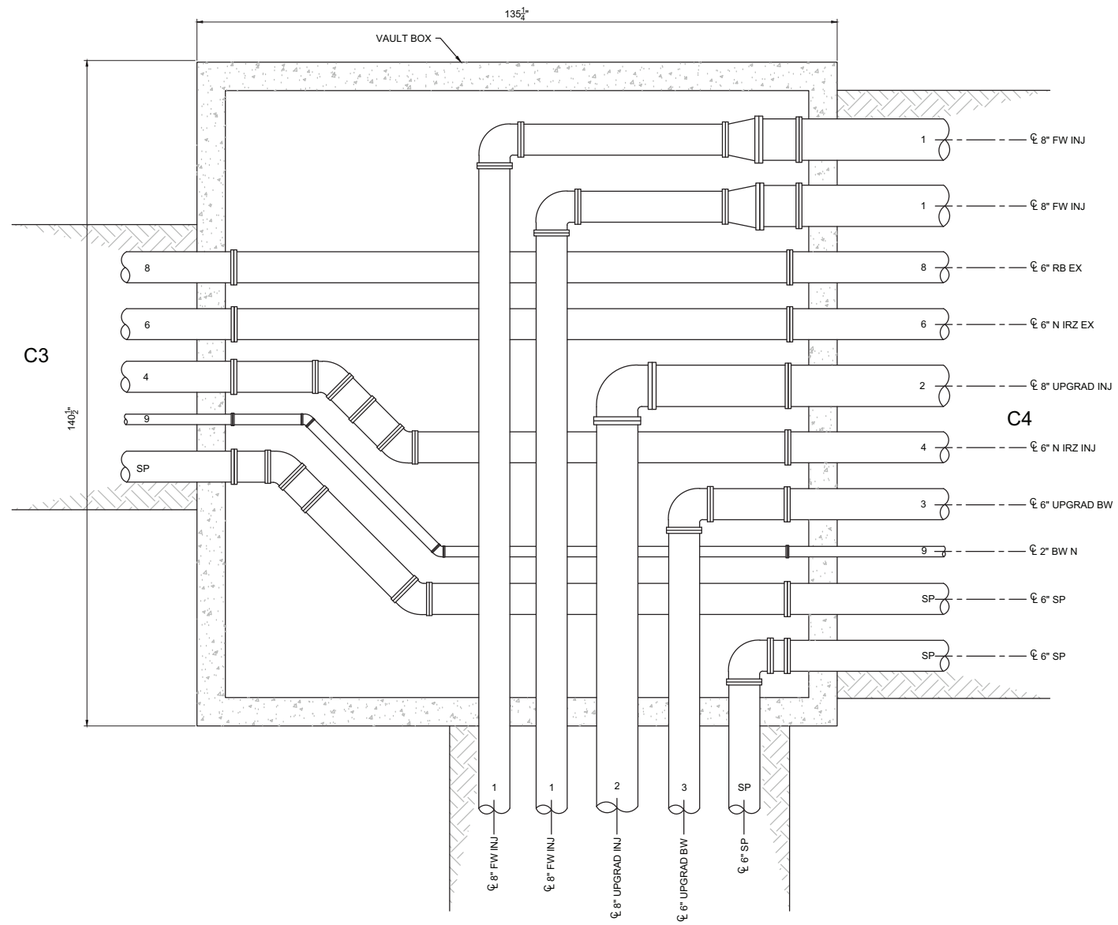

3 DETAIL
3/4"=1'-0"
C-07-41

PIPE ID	SERVICE
1	FRESH WATER INJECTION LOOP
2	UPGRADIENT INJECTION
3	UPGRADIENT BACKWASH
4	NORTH IRZ INJECTION (1-22)
5	SOUTH IRZ INJECTION (24-40)
6	NORTHERN IRZ EXTRACTION
7	IRZ-23 EXTRACTION
8	RIVERBANK EXTRACTION
9	BACKWASH NORTH
10	BACKWASH SOUTH
11	EAST RAVINE EXTRACTION WELL NETWORK HEADER
12	NORTHEAST OF TCS EXTRACTION WELL NETWORK HEADER
13	TCS INJECTION
14	TCS BACKWASH
15	REMEDY WASTEWATER
16	TREATED WATER
17	FIRE PROTECTION WATER
18	SOUTH IRZ EXTRACTION SPARE
19	EAST RAVINE ER-6 EXTRACTION
20	480V POWER CONDUIT
21	COMMUNICATIONS CONDUIT
22	12kV POWER
23	#2/0 BARE COPPER GROUND
24	TWB SUPPLEMENTAL FLOW
25	TWB EXTRACTION WELL NETWORK HEADER
CA	CARBON AMENDED WATER
PO	POTABLE WATER
SP	SPARE PIPE
SP(e)	SPARE ELECTRICAL CONDUIT

NOTES:

1. SAND SHALL BE USED FROM THE BASE OF THE TRENCH TO 6 INCHES ABOVE THE TOP OF PIPES. SOILS FROM THE TRENCH EXCAVATION SHALL BE MOISTURE CONDITIONED AND USED AS BACKFILL. COMPACT TO 95% RELATIVE COMPACTION TO 12 INCHES BELOW GRADE. FOUR INCHES OF AS-CLASS 2 MATERIAL SHALL BE PLACED ON TOP OF THE COMPACTED SOIL FOLLOWED BY 4 INCHES OF AB-CLASS 2. THE ROADBASE SHALL BE TOPPED WITH A 2-INCH BASE COURSE LAYER AND CAPPED WITH A 2-INCH HMA PG 70-10 SURFACE COURSE.
2. PIPE SUPPORTS AND CLEANOUTS NOT SHOWN FOR CLARITY.
3. ALL COVERS SHALL BE TRAFFIC RATED.
4. CASING SPACERS NOT SHOWN FOR CLARITY.

- DRAFT -
NOT FOR CONSTRUCTION

ETIC ENGINEERING

ARCADIS

NO.	DATE	DESCRIPTION	GM/SPEC	DWN	CHKD	SUPV	APVD	BY
1	09/08/14	PRE-FINAL (90%) DESIGN		AJW	BAS	JPB	JEF	
0	04/05/13	INTERMEDIATE (60%) DESIGN		AJW	KLD	JPB	JEF	

REVISIONS

APPROVED BY: JEF

SO	
SUPV	JPB
DSGN	BAS
DWN	AJW
CHKD	JPB
OK	JEF
DATE	09/08/14
SCALES	1" = 1'-0"

TOPOCK GROUNDWATER REMEDIATION PROJECT

INTERSECTION DETAILS

GAS TRANSMISSION & DISTRIBUTION
PACIFIC GAS AND ELECTRIC COMPANY
SAN FRANCISCO, CALIFORNIA

MICROFILM
BILL OF MATL
DWG LIST
SUPSDS
SUPSD BY

SHEET NO. C-07-112 of SHEETS
REV 1

N1808

08/27/2014, 15:33, G:\Graphics\ART\TOPOCK-01\Post 90%\C-07-108 to 122_PipeTrenchDetails.dwg, Tab: C-07-112

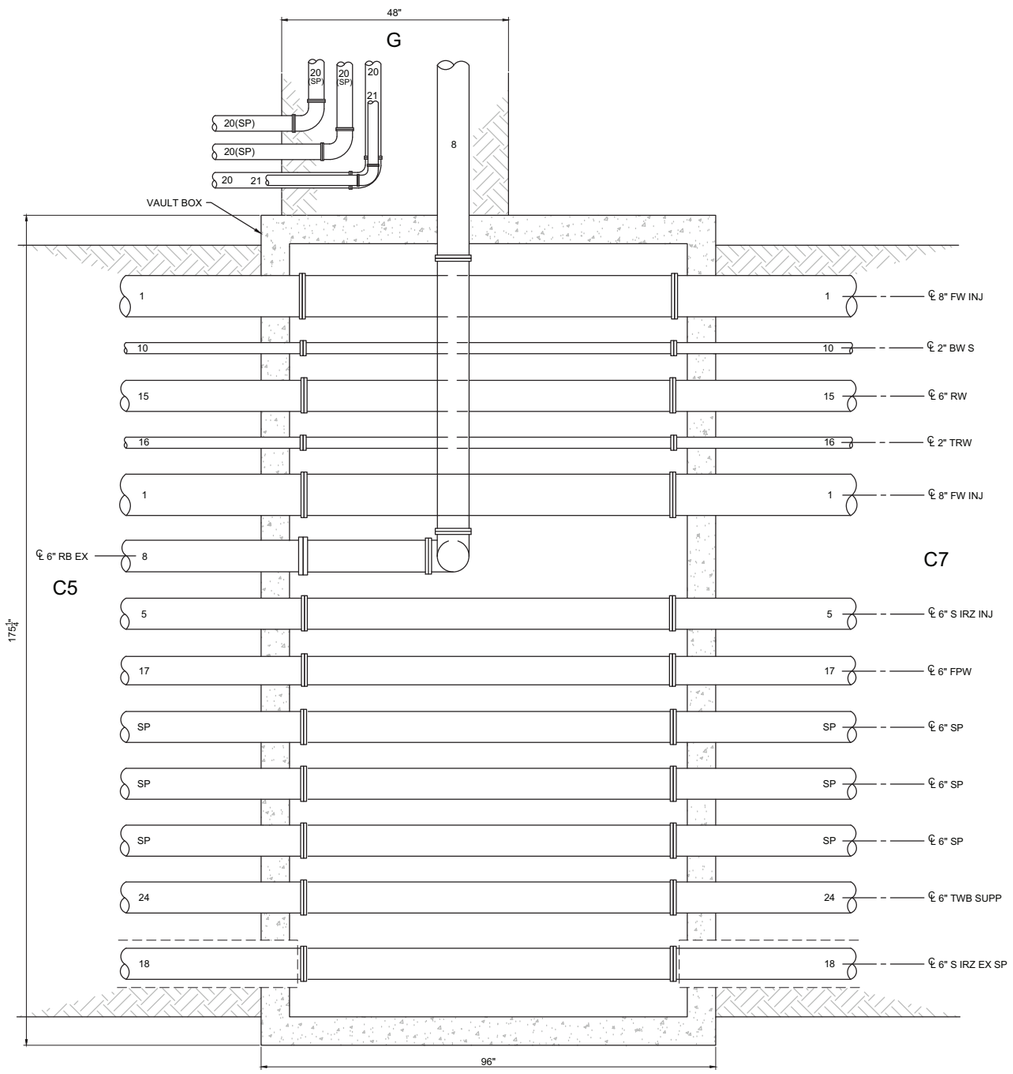

4 DETAIL
3/4"=1'-0"
C-07-43

PIPE ID	SERVICE
1	FRESH WATER INJECTION LOOP
2	UPGRADIENT INJECTION
3	UPGRADIENT BACKWASH
4	NORTH IRZ INJECTION (1-22)
5	SOUTH IRZ INJECTION (24-40)
6	NORTHERN IRZ EXTRACTION
7	IRZ-23 EXTRACTION
8	RIVERBANK EXTRACTION
9	BACKWASH NORTH
10	BACKWASH SOUTH
11	EAST RAVINE EXTRACTION WELL NETWORK HEADER
12	NORTHEAST OF TCS EXTRACTION WELL NETWORK HEADER
13	TCS INJECTION
14	TCS BACKWASH
15	REMEDY WASTEWATER
16	TREATED WATER
17	FIRE PROTECTION WATER
18	SOUTH IRZ EXTRACTION SPARE
19	EAST RAVINE ER-6 EXTRACTION
20	480V POWER CONDUIT
21	COMMUNICATIONS CONDUIT
22	12kV POWER
23	#2/0 BARE COPPER GROUND
24	TWB SUPPLEMENTAL FLOW
25	TWB EXTRACTION WELL NETWORK HEADER
CA	CARBON AMENDED WATER
PO	POTABLE WATER
SP	SPARE PIPE
SP(e)	SPARE ELECTRICAL CONDUIT

NOTES:

1. SAND SHALL BE USED FROM THE BASE OF THE TRENCH TO 6 INCHES ABOVE THE TOP OF PIPES. SOILS FROM THE TRENCH EXCAVATION SHALL BE MOISTURE CONDITIONED AND USED AS BACKFILL. COMPACT TO 95% RELATIVE COMPACTION TO 12 INCHES BELOW GRADE. FOUR INCHES OF AS-CLASS 2 MATERIAL SHALL BE PLACED ON TOP OF THE COMPACTED SOIL FOLLOWED BY 4 INCHES OF AB-CLASS 2. THE ROADBASE SHALL BE TOPPED WITH A 2-INCH BASE COURSE LAYER AND CAPPED WITH A 2-INCH HMA PG 70-10 SURFACE COURSE.
2. PIPE SUPPORTS AND CLEANOUTS NOT SHOWN FOR CLARITY.
3. ALL COVERS SHALL BE TRAFFIC RATED.

- DRAFT -
NOT FOR
CONSTRUCTION

ETIC ENGINEERING

ARCADIS

NO.	DATE	DESCRIPTION	GM/SPEC	DWN	CHKD	SUPV	APVD BY
1	09/08/14	PRE-FINAL (90%) DESIGN		AJW	BAS	JPB	JEF
0	04/05/13	INTERMEDIATE (60%) DESIGN		AJW	KLD	JPB	JEF

REVISIONS

APPROVED BY: JEF

SO	
SUPV	JPB
DSGN	BAS
DWN	AJW
CHKD	JPB
OK	JEF
DATE	09/08/14
SCALES	1" = 1'-0"

TOPOCK GROUNDWATER REMEDIATION PROJECT

INTERSECTION DETAILS

GAS TRANSMISSION & DISTRIBUTION
PACIFIC GAS AND ELECTRIC COMPANY
SAN FRANCISCO, CALIFORNIA

MICROFILM
BILL OF MATL
DWG LIST
SUPSDS
SUPSD BY
SHEET NO. of SHEETS
C-07-113
REV 1

08/27/2014, 15:33, G:\Graphics\AR\TOPOCK-01\Post 90%\C-07-108 to 122_Pipe Trench\Details.dwg, Tab: C-07-113

N1808

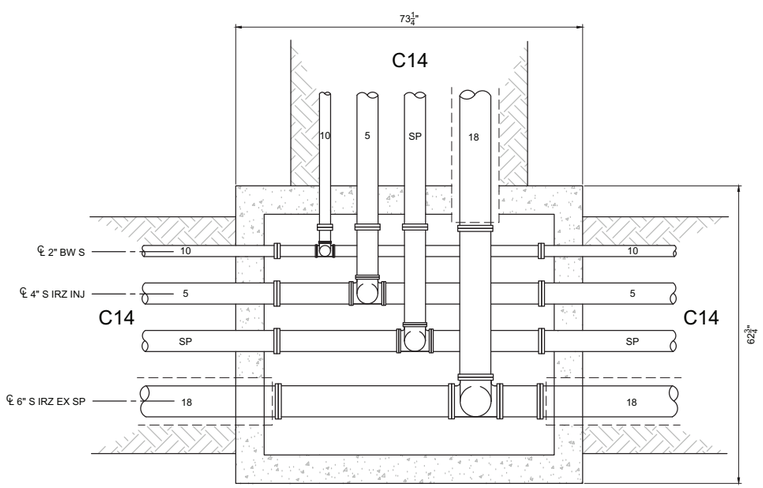

5 DETAIL
3/4"=1'-0"
C-07-50

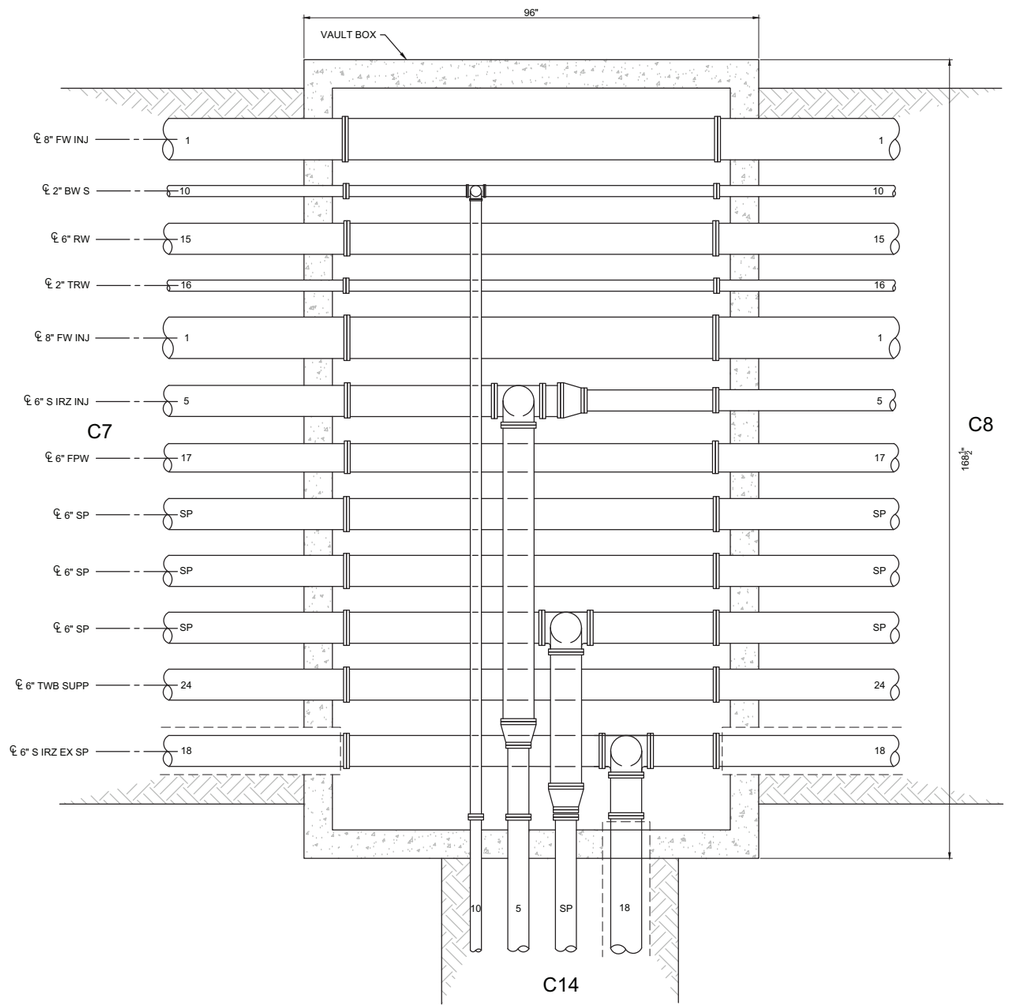

6 DETAIL
3/4"=1'-0"
C-07-44

PIPE ID	SERVICE
1	FRESH WATER INJECTION LOOP
2	UPGRADIENT INJECTION
3	UPGRADIENT BACKWASH
4	NORTH IRZ INJECTION (1-22)
5	SOUTH IRZ INJECTION (24-40)
6	NORTHERN IRZ EXTRACTION
7	IRZ-23 EXTRACTION
8	RIVERBANK EXTRACTION
9	BACKWASH NORTH
10	BACKWASH SOUTH
11	EAST RAVINE EXTRACTION WELL NETWORK HEADER
12	NORTHEAST OF TCS EXTRACTION WELL NETWORK HEADER
13	TCS INJECTION
14	TCS BACKWASH
15	REMEDY WASTEWATER
16	TREATED WATER
17	FIRE PROTECTION WATER
18	SOUTH IRZ EXTRACTION SPARE
19	EAST RAVINE ER-6 EXTRACTION
20	480V POWER CONDUIT
21	COMMUNICATIONS CONDUIT
22	12kV POWER
23	#2/0 BARE COPPER GROUND
24	TWB SUPPLEMENTAL FLOW
25	TWB EXTRACTION WELL NETWORK HEADER
CA	CARBON AMENDED WATER
PO	POTABLE WATER
SP	SPARE PIPE
SP(e)	SPARE ELECTRICAL CONDUIT

NOTES:

1. SAND SHALL BE USED FROM THE BASE OF THE TRENCH TO 6 INCHES ABOVE THE TOP OF PIPES. SOILS FROM THE TRENCH EXCAVATION SHALL BE MOISTURE CONDITIONED AND USED AS BACKFILL. COMPACT TO 95% RELATIVE COMPACTION TO 12 INCHES BELOW GRADE. FOUR INCHES OF AS-CLASS 2 MATERIAL SHALL BE PLACED ON TOP OF THE COMPACTED SOIL FOLLOWED BY 4 INCHES OF AB-CLASS 2. THE ROADBASE SHALL BE TOPPED WITH A 2-INCH BASE COURSE LAYER AND CAPPED WITH A 2-INCH HMA PG 70-10 SURFACE COURSE.
2. PIPE SUPPORTS AND CLEANOUTS NOT SHOWN FOR CLARITY.
3. ALL COVERS SHALL BE TRAFFIC RATED.

- DRAFT -
NOT FOR
CONSTRUCTION

ETIC ENGINEERING

ARCADIS

NO.	DATE	DESCRIPTION	GM/SPEC	DWN	CHKD	SUPV	APVD BY
1	09/08/14	PRE-FINAL (90%) DESIGN		AJW	BAS	JPB	JEF
0	04/05/13	INTERMEDIATE (60%) DESIGN		AJW	KLD	JPB	JEF

REVISIONS

APPROVED BY: JEF

SO	
SUPV	JPB
DSGN	BAS
DWN	AJW
CHKD	JPB
OK	JEF
DATE	09/08/14
SCALES	1" = 1'-0"

TOPOCK GROUNDWATER REMEDIATION PROJECT

INTERSECTION DETAILS

GAS TRANSMISSION & DISTRIBUTION
PACIFIC GAS AND ELECTRIC COMPANY
SAN FRANCISCO, CALIFORNIA

MICROFILM
BILL OF MATL
DWG LIST
SUPSDS
SUPSD BY
SHEET NO. of SHEETS
C-07-114
REV 1

08/27/2014, 15:33, G:\Graphics\AR\TOPOCK-01\Post 90%\C-07-108 to 122_Pipe Trench\Details.dwg, Tab: C-07-114

N1808

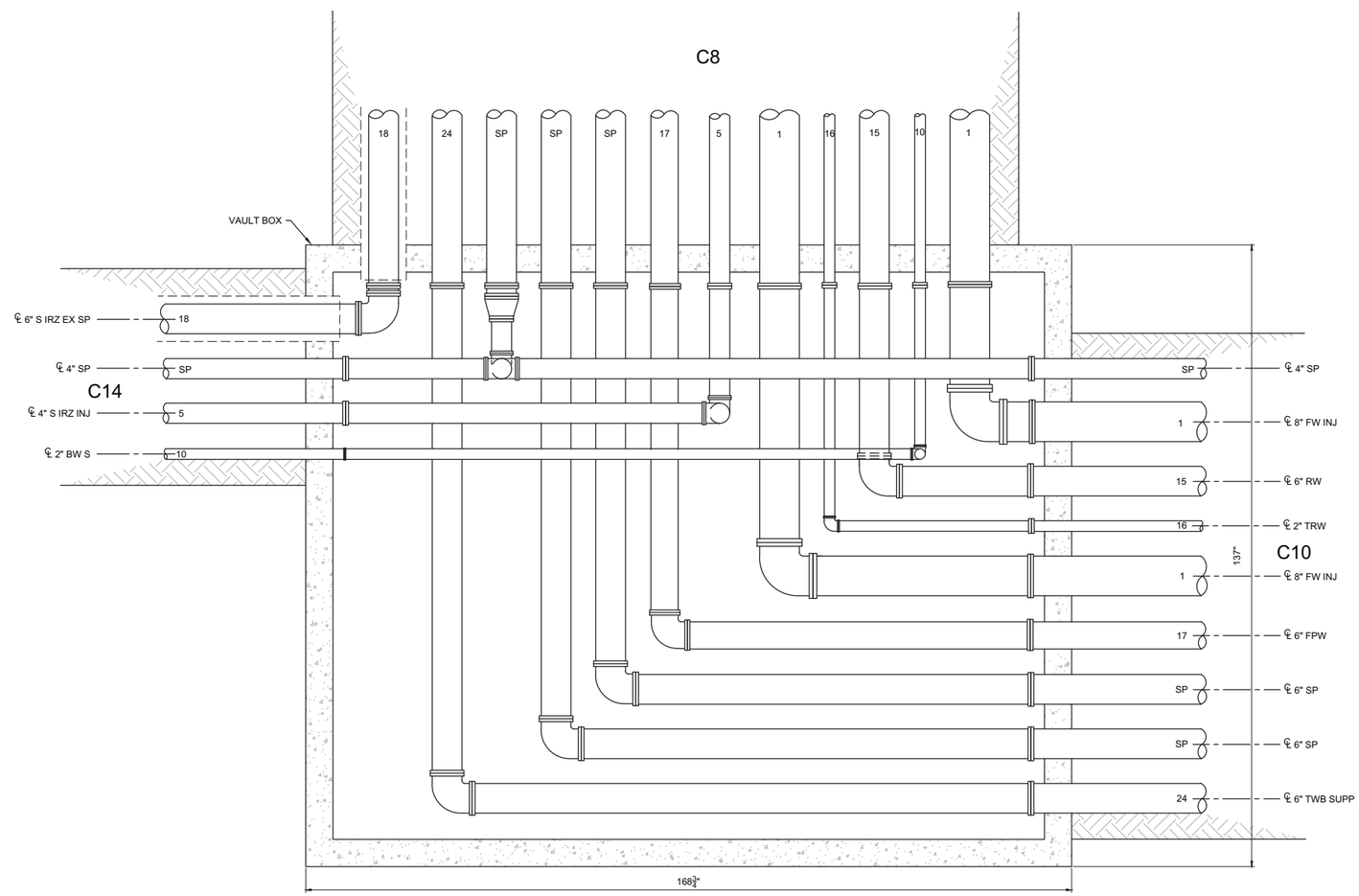

7 DETAIL
3/4"=1'-0"
C-07-46
C-07-47
C-07-51

PIPE ID	SERVICE
1	FRESH WATER INJECTION LOOP
2	UPGRADIENT INJECTION
3	UPGRADIENT BACKWASH
4	NORTH IRZ INJECTION (1-22)
5	SOUTH IRZ INJECTION (24-40)
6	NORTHERN IRZ EXTRACTION
7	IRZ-23 EXTRACTION
8	RIVERBANK EXTRACTION
9	BACKWASH NORTH
10	BACKWASH SOUTH
11	EAST RAVINE EXTRACTION WELL NETWORK HEADER
12	NORTHEAST OF TCS EXTRACTION WELL NETWORK HEADER
13	TCS INJECTION
14	TCS BACKWASH
15	REMEDY WASTEWATER
16	TREATED WATER
17	FIRE PROTECTION WATER
18	SOUTH IRZ EXTRACTION SPARE
19	EAST RAVINE ER-6 EXTRACTION
20	480V POWER CONDUIT
21	COMMUNICATIONS CONDUIT
22	12kV POWER
23	#2/0 BARE COPPER GROUND
24	TWB SUPPLEMENTAL FLOW
25	TWB EXTRACTION WELL NETWORK HEADER
CA	CARBON AMENDED WATER
PO	POTABLE WATER
SP	SPARE PIPE
SP(e)	SPARE ELECTRICAL CONDUIT

NOTES:

1. SAND SHALL BE USED FROM THE BASE OF THE TRENCH TO 6 INCHES ABOVE THE TOP OF PIPES. SOILS FROM THE TRENCH EXCAVATION SHALL BE MOISTURE CONDITIONED AND USED AS BACKFILL. COMPACT TO 95% RELATIVE COMPACTION TO 12 INCHES BELOW GRADE. FOUR INCHES OF AS-CLASS 2 MATERIAL SHALL BE PLACED ON TOP OF THE COMPACTED SOIL FOLLOWED BY 4 INCHES OF AB-CLASS 2. THE ROADBASE SHALL BE TOPPED WITH A 2-INCH BASE COURSE LAYER AND CAPPED WITH A 2-INCH HMA PG 70-10 SURFACE COURSE.
2. PIPE SUPPORTS AND CLEANOUTS NOT SHOWN FOR CLARITY.
3. ALL COVERS SHALL BE TRAFFIC RATED.

- DRAFT -
NOT FOR
CONSTRUCTION

ETIC ENGINEERING

ARCADIS

NO.	DATE	DESCRIPTION	GM/SPEC	DWN	CHKD	SUPV	APVD BY
1	09/08/14	PRE-FINAL (90%) DESIGN		AJW	BAS	JPB	JEF
0	04/05/13	INTERMEDIATE (60%) DESIGN		AJW	KLD	JPB	JEF

REVISIONS

APPROVED BY: JEF

SO	
SUPV	JPB
DSGN	BAS
DWN	AJW
CHKD	JPB
OK	JEF
DATE	09/08/14
SCALES	1" = 1'-0"

TOPOCK GROUNDWATER REMEDIATION PROJECT

INTERSECTION DETAILS

GAS TRANSMISSION & DISTRIBUTION
PACIFIC GAS AND ELECTRIC COMPANY
SAN FRANCISCO, CALIFORNIA

MICROFILM
BILL OF MATL
DWG LIST
SUPSDS
SUPSD BY
SHEET NO. of SHEETS
C-07-115
REV 1

N1808

08/27/2014, 15:33, G:\Graphics\ARI\TOPOCK-01\Post 90%\C-07-108 to 122_Pipe Trench Details.dwg, Tab: C-07-115

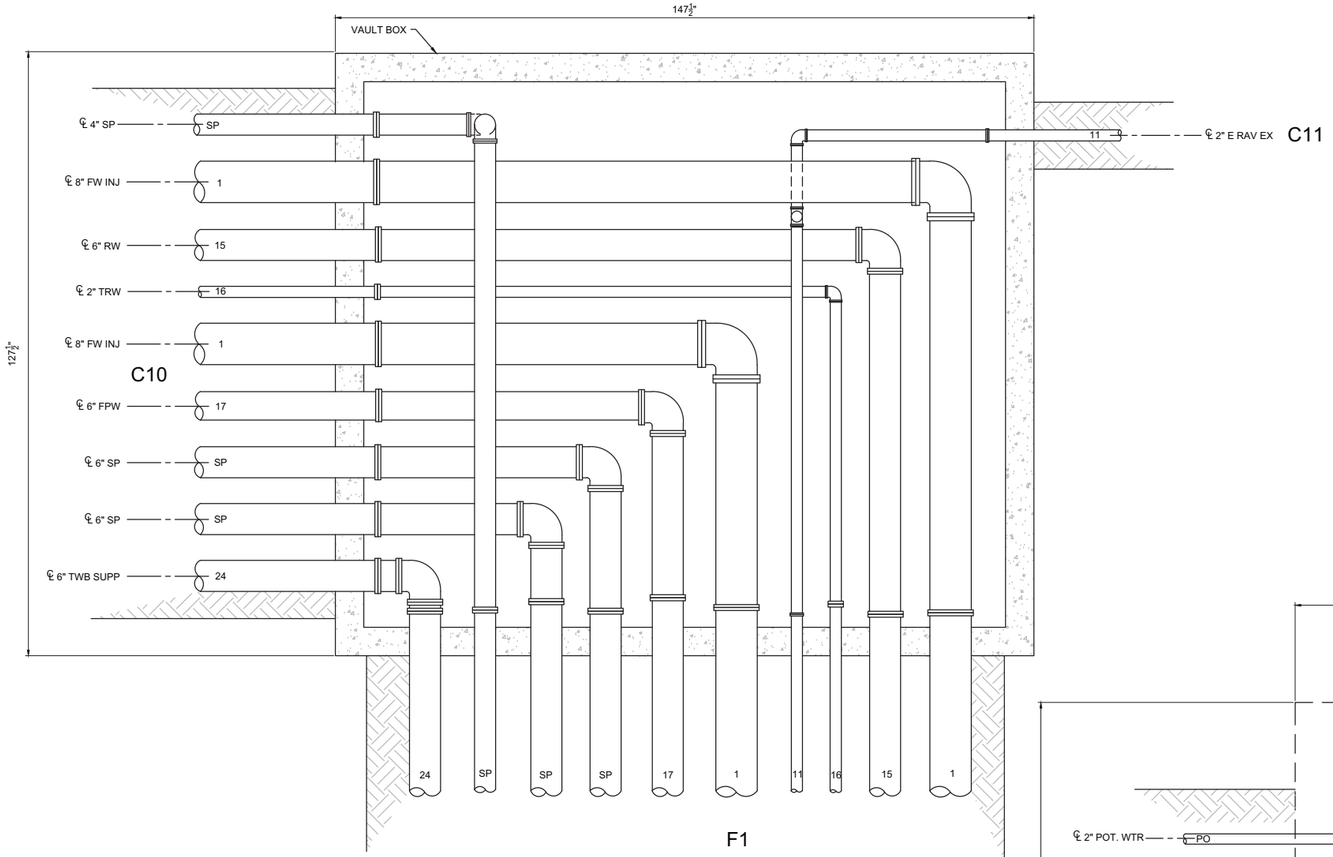

8 DETAIL
3/4"='1-0"
C-07-47
C-07-52

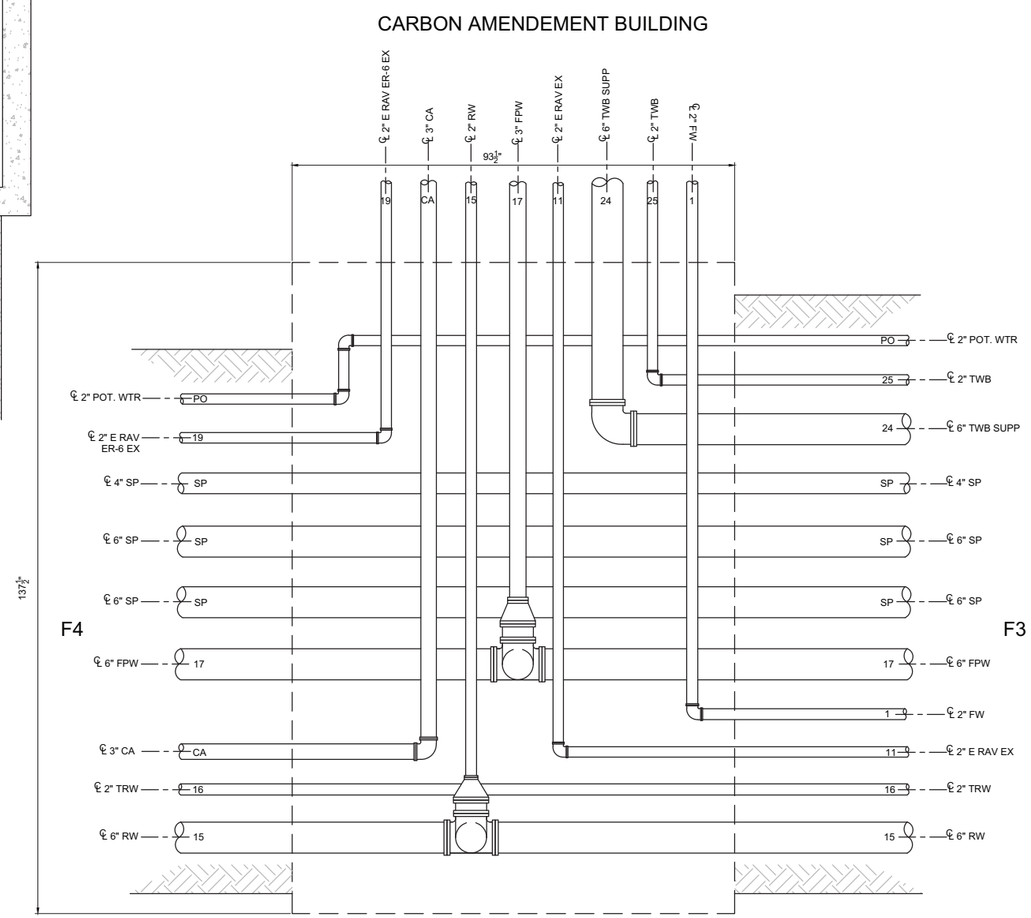

14 DETAIL
3/4"='1-0"
C-07-52

PIPE ID	SERVICE
1	FRESH WATER INJECTION LOOP
2	UPGRADIENT INJECTION
3	UPGRADIENT BACKWASH
4	NORTH IRZ INJECTION (1-22)
5	SOUTH IRZ INJECTION (24-40)
6	NORTHERN IRZ EXTRACTION
7	IRZ-23 EXTRACTION
8	RIVERBANK EXTRACTION
9	BACKWASH NORTH
10	BACKWASH SOUTH
11	EAST RAVINE EXTRACTION WELL NETWORK HEADER
12	NORTHEAST OF TCS EXTRACTION WELL NETWORK HEADER
13	TCS INJECTION
14	TCS BACKWASH
15	REMEDY WASTEWATER
16	TREATED WATER
17	FIRE PROTECTION WATER
18	SOUTH IRZ EXTRACTION SPARE
19	EAST RAVINE ER-6 EXTRACTION
20	480V POWER CONDUIT
21	COMMUNICATIONS CONDUIT
22	12kV POWER
23	#2/0 BARE COPPER GROUND
24	TWB SUPPLEMENTAL FLOW
25	TWB EXTRACTION WELL NETWORK HEADER
CA	CARBON AMENDED WATER
PO	POTABLE WATER
SP	SPARE PIPE
SP(e)	SPARE ELECTRICAL CONDUIT

NOTES:

1. SAND SHALL BE USED FROM THE BASE OF THE TRENCH TO 6 INCHES ABOVE THE TOP OF PIPES. SOILS FROM THE TRENCH EXCAVATION SHALL BE MOISTURE CONDITIONED AND USED AS BACKFILL. COMPACT TO 95% RELATIVE COMPACTION TO 12 INCHES BELOW GRADE. FOUR INCHES OF AS-CLASS 2 MATERIAL SHALL BE PLACED ON TOP OF THE COMPACTED SOIL FOLLOWED BY 4 INCHES OF AB-CLASS 2. THE ROADBASE SHALL BE TOPPED WITH A 2-INCH BASE COURSE LAYER AND CAPPED WITH A 2-INCH HMA PG 70-10 SURFACE COURSE.
2. PIPE SUPPORTS AND CLEANOUTS NOT SHOWN FOR CLARITY.
3. ALL COVERS SHALL BE TRAFFIC RATED.

- DRAFT -
NOT FOR
CONSTRUCTION

ETIC ENGINEERING

ARCADIS

NO.	DATE	DESCRIPTION	GM/SPEC	DWN	CHKD	SUPV	APVD BY
1	09/08/14	PRE-FINAL (90%) DESIGN		AJW	BAS	JPB	JEF
0	04/05/13	INTERMEDIATE (60%) DESIGN		AJW	KLD	JPB	JEF

REVISIONS

APPROVED BY: JEF

SO	
SUPV	JPB
DSGN	BAS
DWN	AJW
CHKD	JPB
OK	JEF
DATE	09/08/14
SCALES	1" = 1'-0"

TOPOCK GROUNDWATER REMEDIATION PROJECT

INTERSECTION DETAILS

GAS TRANSMISSION & DISTRIBUTION
PACIFIC GAS AND ELECTRIC COMPANY
SAN FRANCISCO, CALIFORNIA

MICROFILM
BILL OF MATL
DWG LIST
SUPSDS
SUPSD BY
SHEET NO. of SHEETS
C-07-116
REV 1

08/27/2014, 15:33, G:\Graphics\AR\TOPOCK-01\Post 90%\C-07-108 to 122_Pipe Trench\Details.dwg, Tab: C-07-116

N1808

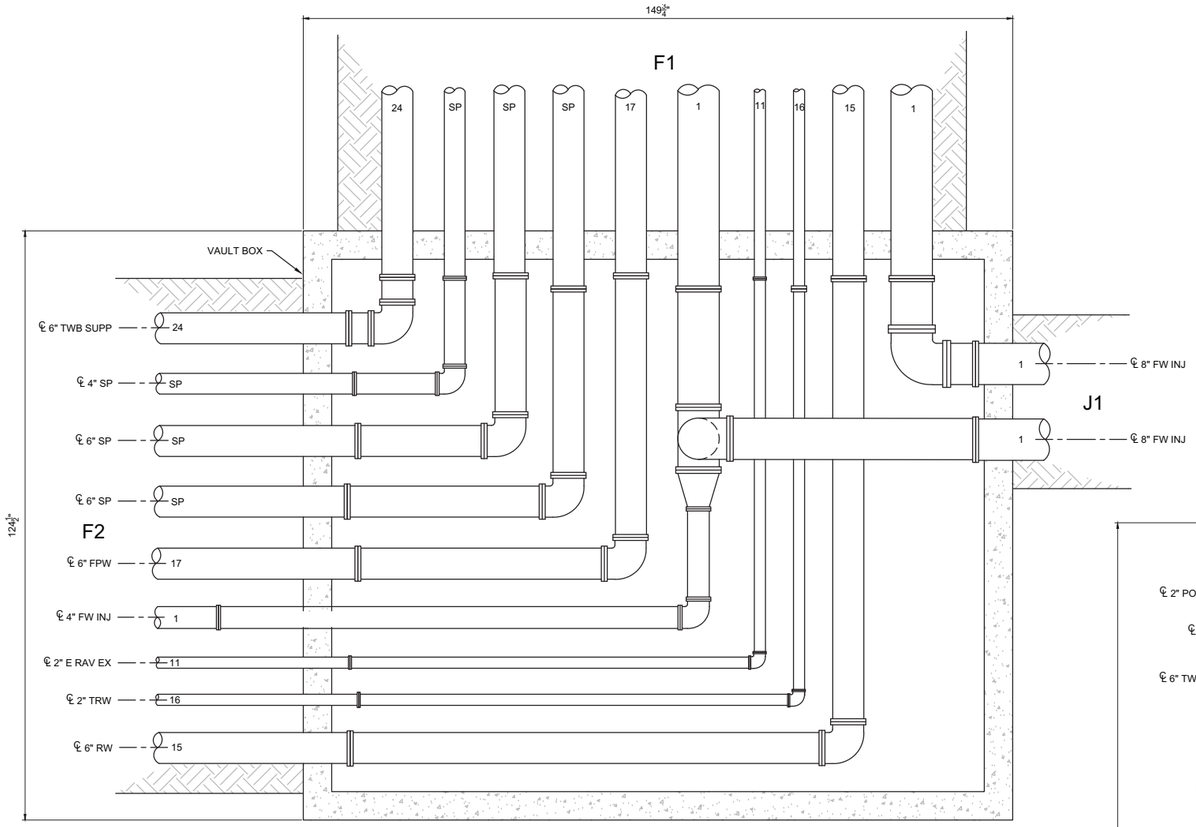

9 DETAIL
3/4"=1'-0"
C-07-52

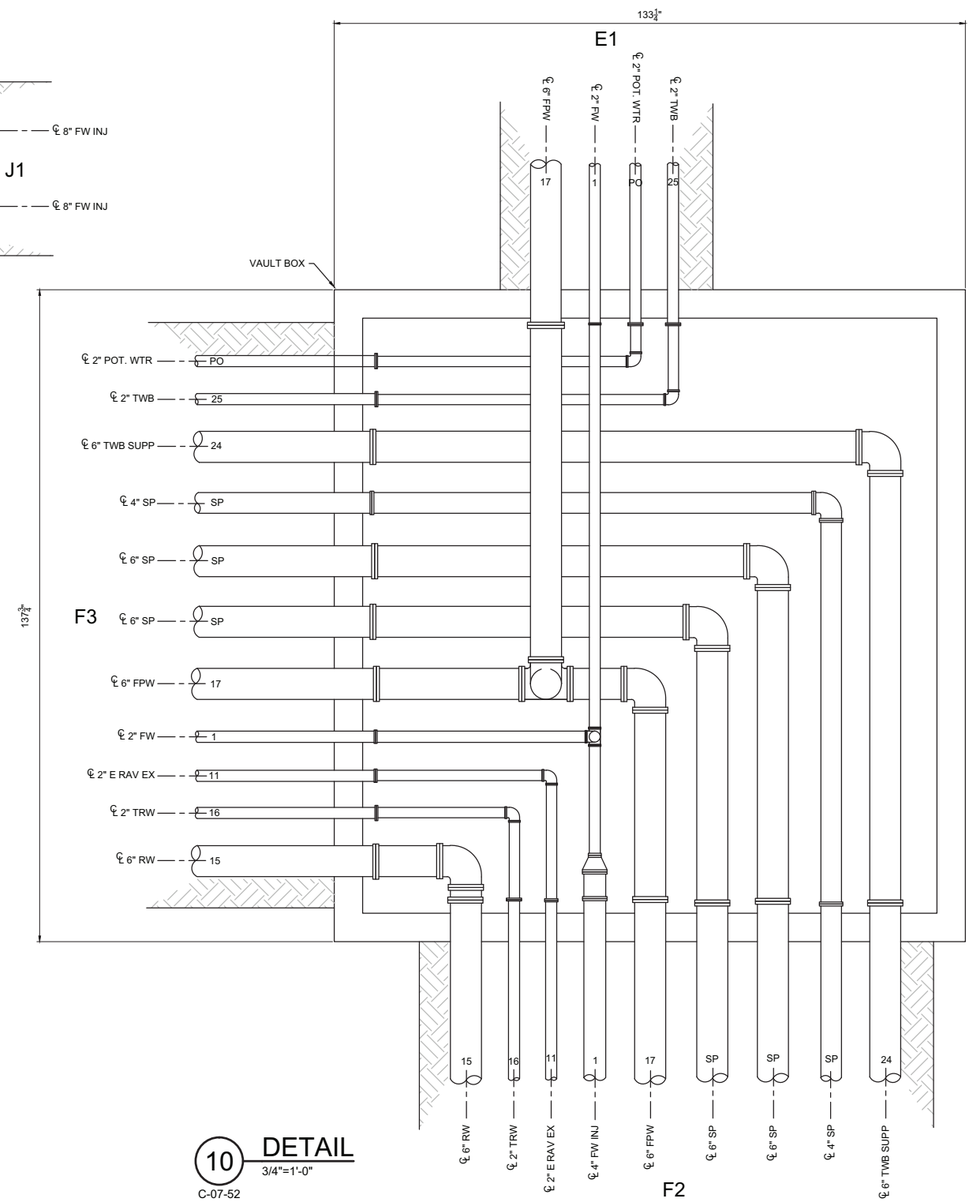

10 DETAIL
3/4"=1'-0"
C-07-52

PIPE ID	SERVICE
1	FRESH WATER INJECTION LOOP
2	UPGRADIENT INJECTION
3	UPGRADIENT BACKWASH
4	NORTH IRZ INJECTION (1-22)
5	SOUTH IRZ INJECTION (24-40)
6	NORTHERN IRZ EXTRACTION
7	IRZ-23 EXTRACTION
8	RIVERBANK EXTRACTION
9	BACKWASH NORTH
10	BACKWASH SOUTH
11	EAST RAVINE EXTRACTION WELL NETWORK HEADER
12	NORTHEAST OF TCS EXTRACTION WELL NETWORK HEADER
13	TCS INJECTION
14	TCS BACKWASH
15	REMEDY WASTEWATER
16	TREATED WATER
17	FIRE PROTECTION WATER
18	SOUTH IRZ EXTRACTION SPARE
19	EAST RAVINE ER-6 EXTRACTION
20	480V POWER CONDUIT
21	COMMUNICATIONS CONDUIT
22	12kV POWER
23	#2/0 BARE COPPER GROUND
24	TWB SUPPLEMENTAL FLOW
25	TWB EXTRACTION WELL NETWORK HEADER
CA	CARBON AMENDED WATER
PO	POTABLE WATER
SP	SPARE PIPE
SP(e)	SPARE ELECTRICAL CONDUIT

NOTES:

1. SAND SHALL BE USED FROM THE BASE OF THE TRENCH TO 6 INCHES ABOVE THE TOP OF PIPES. SOILS FROM THE TRENCH EXCAVATION SHALL BE MOISTURE CONDITIONED AND USED AS BACKFILL. COMPACT TO 95% RELATIVE COMPACTION TO 12 INCHES BELOW GRADE. FOUR INCHES OF AS-CLASS 2 MATERIAL SHALL BE PLACED ON TOP OF THE COMPACTED SOIL FOLLOWED BY 4 INCHES OF AB-CLASS 2. THE ROADBASE SHALL BE TOPPED WITH A 2-INCH BASE COURSE LAYER AND CAPPED WITH A 2-INCH HMA PG 70-10 SURFACE COURSE.
2. PIPE SUPPORTS AND CLEANOUTS NOT SHOWN FOR CLARITY.
3. ALL COVERS SHALL BE TRAFFIC RATED.
4. CASING SPACERS NOT SHOWN FOR CLARITY.

- DRAFT -
NOT FOR
CONSTRUCTION

ETIC ENGINEERING

ARCADIS

NO.	DATE	DESCRIPTION	GM/SPEC	DWN	CHKD	SUPV	APVD BY
1	09/08/14	PRE-FINAL (90%) DESIGN		AJW	BAS	JPB	JEF
0	04/05/13	INTERMEDIATE (60%) DESIGN		AJW	KLD	JPB	JEF

REVISIONS

APPROVED BY: JEF

SO
SUPV JPB
DSGN BAS
DWN AJW
CHKD JPB
OK JEF
DATE 09/08/14
SCALES 1" = 1'-0"

TOPOCK GROUNDWATER REMEDIATION PROJECT

INTERSECTION DETAILS

GAS TRANSMISSION & DISTRIBUTION
PACIFIC GAS AND ELECTRIC COMPANY
SAN FRANCISCO, CALIFORNIA

MICROFILM
BILL OF MATL
DWG LIST
SUPSDS
SUPSD BY
SHEET NO. of SHEETS
C-07-117
REV 1

N1808

08/27/2014, 15:34, G:\Graphics\ART\TOPOCK\01Post 50%\C-07-108 to 122_Pipe TrenchDetails.dwg, Tab: C-07-117

NOTES:

1. SAND SHALL BE USED FROM THE BASE OF THE TRENCH TO 6 INCHES ABOVE THE TOP OF PIPES. SOILS FROM THE TRENCH EXCAVATION SHALL BE MOISTURE CONDITIONED AND USED AS BACKFILL. COMPACT TO 95% RELATIVE COMPACTION TO 12 INCHES BELOW GRADE. FOUR INCHES OF AS-CLASS 2 MATERIAL SHALL BE PLACED ON TOP OF THE COMPACTED SOIL FOLLOWED BY 4 INCHES OF AB-CLASS 2. THE ROADBASE SHALL BE TOPPED WITH A 2-INCH BASE COURSE LAYER AND CAPPED WITH A 2-INCH HMA PG 70-10 SURFACE COURSE.
2. PIPE SUPPORTS AND CLEANOUTS NOT SHOWN FOR CLARITY.
3. ALL COVERS SHALL BE TRAFFIC RATED.
4. CASING SPACERS NOT SHOWN FOR CLARITY.

PIPE ID	SERVICE
1	FRESH WATER INJECTION LOOP
2	UPGRADIENT INJECTION
3	UPGRADIENT BACKWASH
4	NORTH IRZ INJECTION (1-22)
5	SOUTH IRZ INJECTION (24-40)
6	NORTHERN IRZ EXTRACTION
7	IRZ-23 EXTRACTION
8	RIVERBANK EXTRACTION
9	BACKWASH NORTH
10	BACKWASH SOUTH
11	EAST RAVINE EXTRACTION WELL NETWORK HEADER
12	NORTHEAST OF TCS EXTRACTION WELL NETWORK HEADER
13	TCS INJECTION
14	TCS BACKWASH
15	REMEDY WASTEWATER
16	TREATED WATER
17	FIRE PROTECTION WATER
18	SOUTH IRZ EXTRACTION SPARE
19	EAST RAVINE ER-6 EXTRACTION
20	480V POWER CONDUIT
21	COMMUNICATIONS CONDUIT
22	12kV POWER
23	#2/0 BARE COPPER GROUND
24	TWB SUPPLEMENTAL FLOW
25	TWB EXTRACTION WELL NETWORK HEADER
CA	CARBON AMENDED WATER
PO	POTABLE WATER
SP	SPARE PIPE
SP(e)	SPARE ELECTRICAL CONDUIT

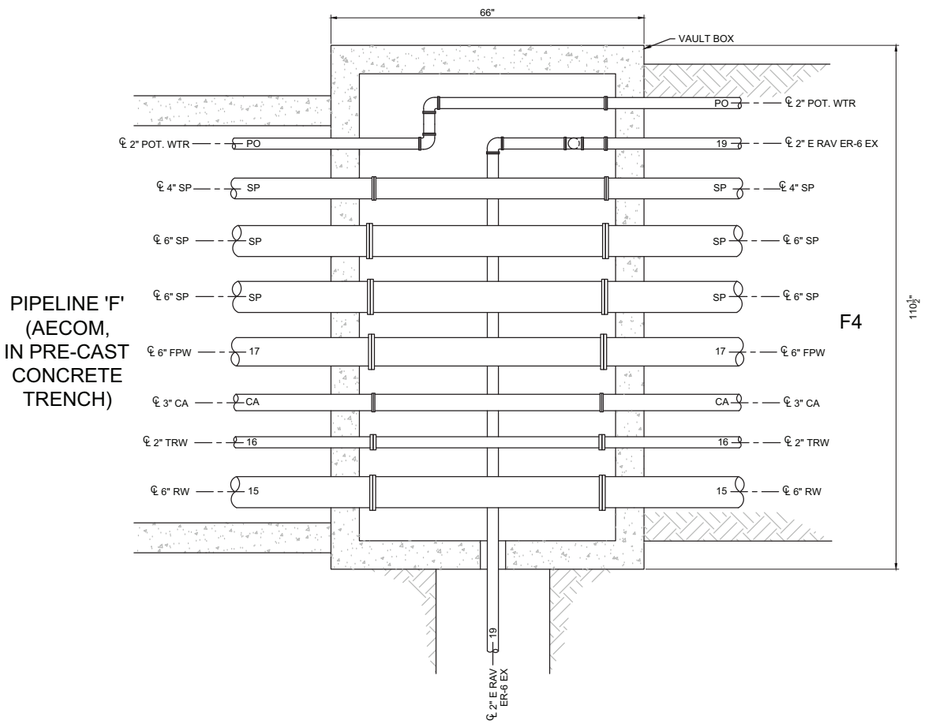

11 DETAIL
3/4"=1'-0"
C-07-52

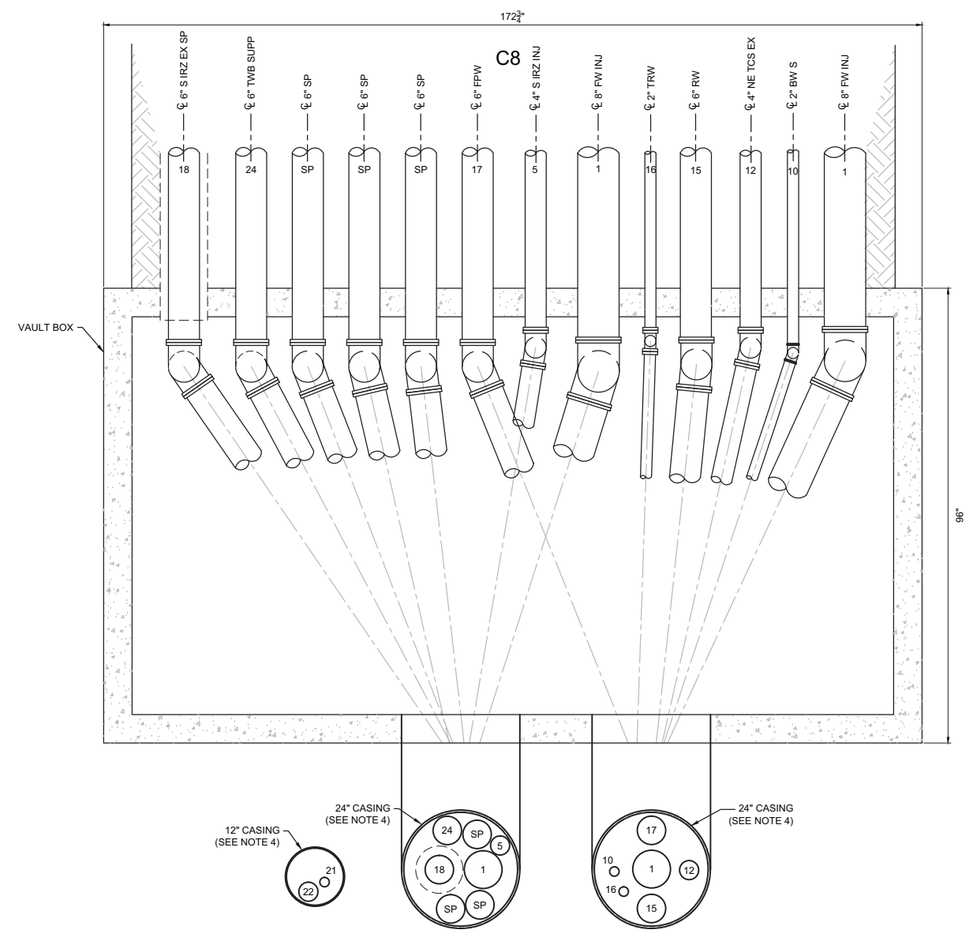

12 DETAIL
3/4"=1'-0"
C-07-46

- DRAFT -
NOT FOR CONSTRUCTION

ETIC ENGINEERING

ARCADIS

NO.	DATE	DESCRIPTION	GM/SPEC	DWN	CHKD	SUPV	APVD	BY
1	09/08/14	PRE-FINAL (90%) DESIGN		AJW	BAS	JPB	JEF	
0	04/05/13	INTERMEDIATE (60%) DESIGN		AJW	KLD	JPB	JEF	

REVISIONS

APPROVED BY: JEF

SO	
SUPV	JPB
DSGN	BAS
DWN	AJW
CHKD	JPB
OK	JEF
DATE	09/08/14
SCALES	1" = 1'-0"

TOPOCK GROUNDWATER REMEDIATION PROJECT

INTERSECTION DETAILS

GAS TRANSMISSION & DISTRIBUTION
PACIFIC GAS AND ELECTRIC COMPANY
SAN FRANCISCO, CALIFORNIA

MICROFILM
BILL OF MATL
DWG LIST
SUPSDS
SUPSD BY
SHEET NO. of SHEETS
C-07-118
REV 1

N1808

08/27/2014, 15:34, G:\Graphics\ARI\TOPOCK-01\Post 90%\C-07-108 to 122_PipeTrench\Details.dwg, Tab: C-07-118

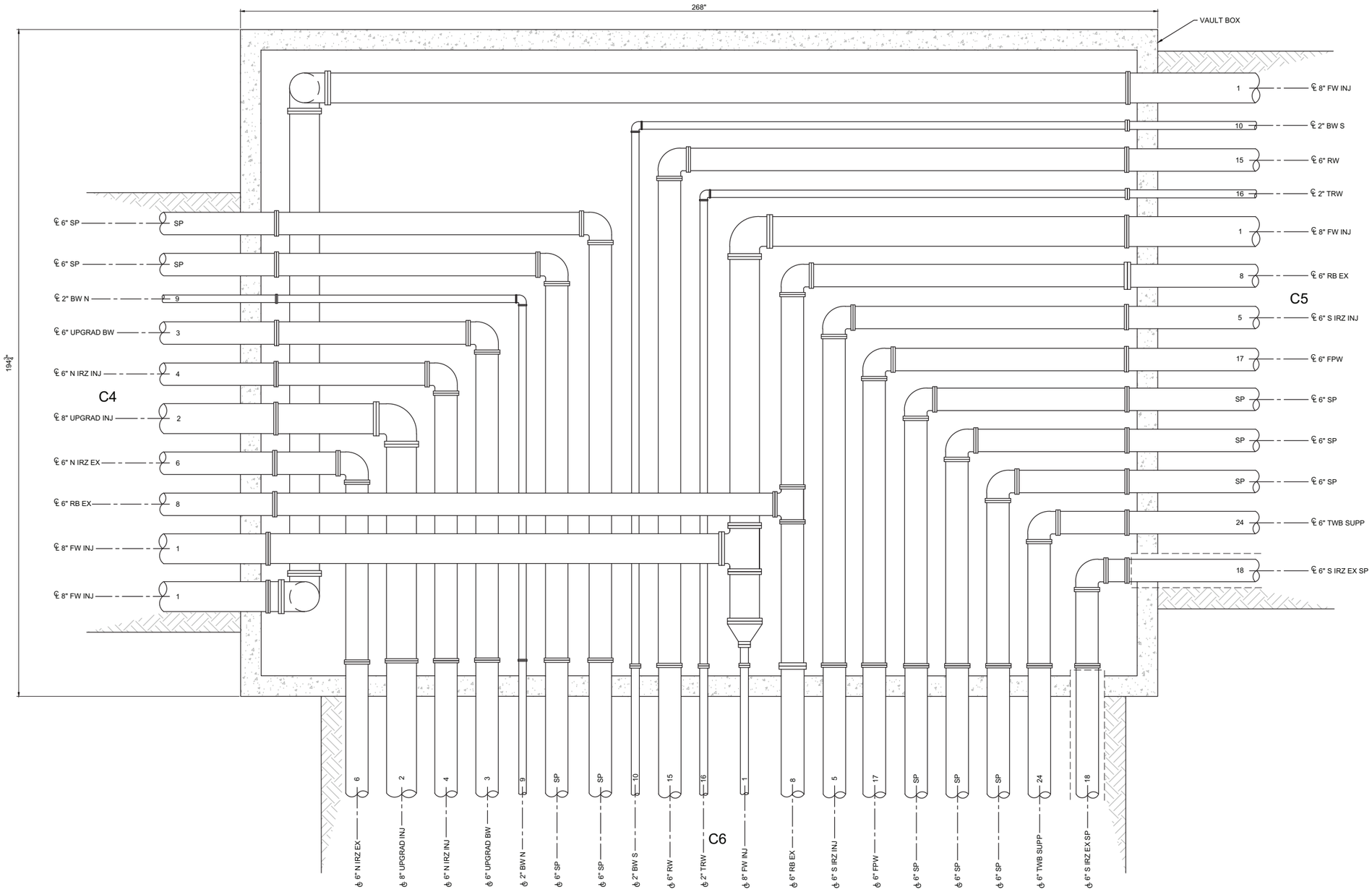

13 DETAIL
3/4"=1'-0"
C-07-52

PIPE ID	SERVICE
1	FRESH WATER INJECTION LOOP
2	UPGRADIENT INJECTION
3	UPGRADIENT BACKWASH
4	NORTH IRZ INJECTION (1-22)
5	SOUTH IRZ INJECTION (24-40)
6	NORTHERN IRZ EXTRACTION
7	IRZ-23 EXTRACTION
8	RIVERBANK EXTRACTION
9	BACKWASH NORTH
10	BACKWASH SOUTH
11	EAST RAVINE EXTRACTION WELL NETWORK HEADER
12	NORTHEAST OF TCS EXTRACTION WELL NETWORK HEADER
13	TCS INJECTION
14	TCS BACKWASH
15	REMEDY WASTEWATER
16	TREATED WATER
17	FIRE PROTECTION WATER
18	SOUTH IRZ EXTRACTION SPARE
19	EAST RAVINE ER-6 EXTRACTION
20	480V POWER CONDUIT
21	COMMUNICATIONS CONDUIT
22	12kV POWER
23	#2/0 BARE COPPER GROUND
24	TWB SUPPLEMENTAL FLOW
25	TWB EXTRACTION WELL NETWORK HEADER
CA	CARBON AMENDED WATER
PO	POTABLE WATER
SP	SPARE PIPE
SP(e)	SPARE ELECTRICAL CONDUIT

NOTES:

1. SAND SHALL BE USED FROM THE BASE OF THE TRENCH TO 6 INCHES ABOVE THE TOP OF PIPES. SOILS FROM THE TRENCH EXCAVATION SHALL BE MOISTURE CONDITIONED AND USED AS BACKFILL. COMPACT TO 95% RELATIVE COMPACTION TO 12 INCHES BELOW GRADE. FOUR INCHES OF AS-CLASS 2 MATERIAL SHALL BE PLACED ON TOP OF THE COMPACTED SOIL FOLLOWED BY 4 INCHES OF AB-CLASS 2. THE ROADBASE SHALL BE TOPPED WITH A 2-INCH BASE COURSE LAYER AND CAPPED WITH A 2-INCH HMA PG 70-10 SURFACE COURSE.
2. PIPE SUPPORTS AND CLEANOUTS NOT SHOWN FOR CLARITY.
3. ALL COVERS SHALL BE TRAFFIC RATED.

- DRAFT -
NOT FOR
CONSTRUCTION

ETIC ENGINEERING

ARCADIS

NO.	DATE	DESCRIPTION	GM/SPEC	DWN	CHKD	SUPV	APVD BY
1	09/08/14	PRE-FINAL (90%) DESIGN		AJW	BAS	JPB	JEF
0	04/05/13	INTERMEDIATE (60%) DESIGN		AJW	KLD	JPB	JEF

REVISIONS

APPROVED BY: JEF

SO	
SUPV	JPB
DSGN	BAS
DWN	AJW
CHKD	JPB
OK	JEF
DATE	09/08/14
SCALES	1" = 1'-0"

TOPOCK GROUNDWATER REMEDIATION PROJECT

INTERSECTION DETAILS

GAS TRANSMISSION & DISTRIBUTION
PACIFIC GAS AND ELECTRIC COMPANY
SAN FRANCISCO, CALIFORNIA

MICROFILM
BILL OF MATL
DWG LIST
SUPSDS
SUPSD BY
SHEET NO. of SHEETS
C-07-119
REV 1

08/27/2014, 15:34, G:\Graphics\ARI\TOPOCK-01\Post 90%\C-07-108 to 122_PipeTrenchDetails.dwg, Tab: C-07-119

N1808

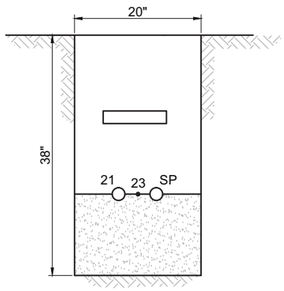

P1-1 P1-2 SECTION 1"=1'-0"
C-07-52

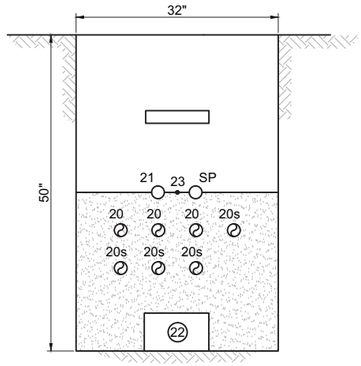

P1-2 P1-3 P1-4 SECTION 1"=1'-0"
C-07-52

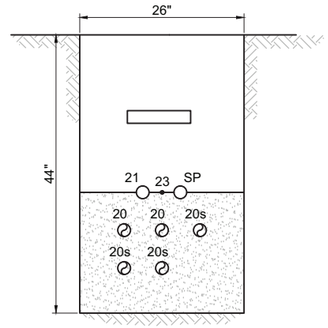

P1-5 P1-6 SECTION 1"=1'-0"
C-07-47

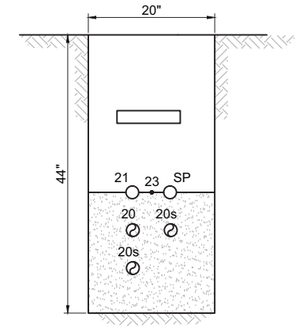

P1-7 P1-8 P1-9 SECTION 1"=1'-0"
C-07-48

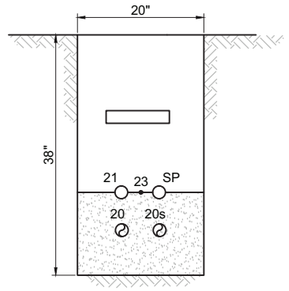

P1-10 SECTION 1"=1'-0"
C-07-52

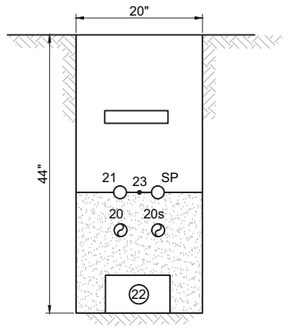

P1-11 SECTION 1"=1'-0"
C-07-52

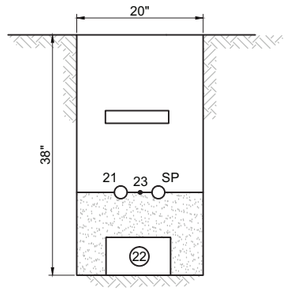

P1-12 P1-14 P1-15 P1-16 P1-17 P1-18 SECTION 1"=1'-0"
C-07-44,45,46

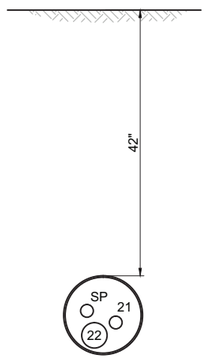

P1-13 SECTION 1"=1'-0"
C-07-46

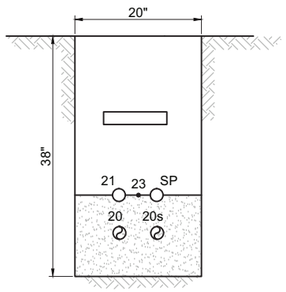

P1-20 SECTION 1"=1'-0"
C-07-52

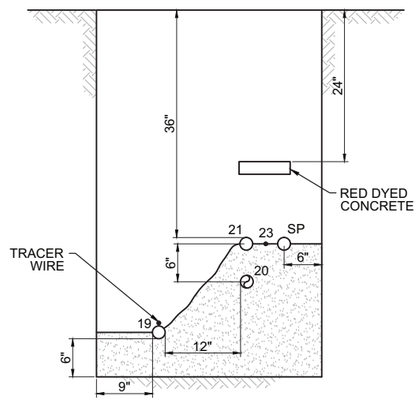

P1-22 P1-23 P1-24 P1-25 SECTION 1"=1'-0"
C-07-59

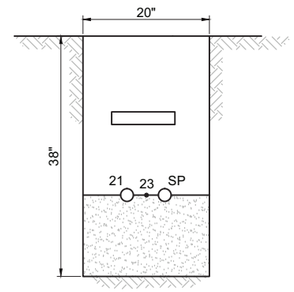

P1-19 P1-26 P1-27 SECTION 1"=1'-0"
C-07-52

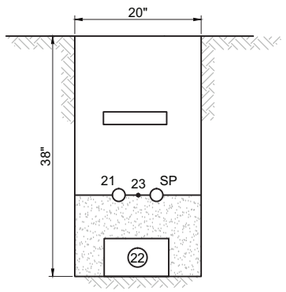

P1-28 SECTION 1"=1'-0"
C-07-52

PIPE ID	SERVICE
20	480V POWER CONDUIT (2", U.N.O)
21	COMMUNICATIONS CONDUIT (2")
22	12kV POWER (3")
23	#2/0 BARE COPPER GROUND
SP	SPARE CONDUIT

NOTE
1. SEE CONDUIT AND CABLE SCHEDULES AND SINGLE LINE DIAGRAMS ON SHEETS E-00-05 THRU E-00-13.
2. BEDDING SHALL EXTEND HALF WAY UP TOP CONDUIT PER THE SPECIFICATIONS.

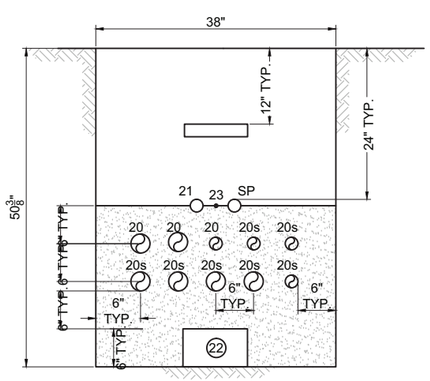

P2-1 P2-2 SECTION 1"=1'-0"
C-07-50

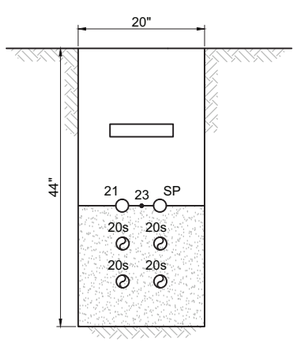

P2-3 P2-4 SECTION 1"=1'-0"
C-07-50

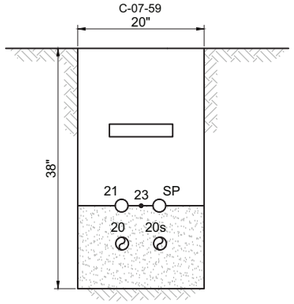

P2-5 SECTION 1"=1'-0"
C-07-50

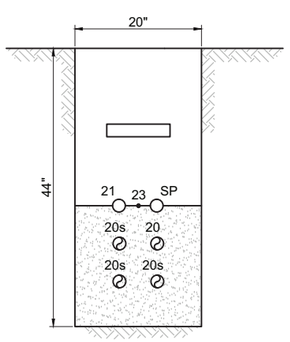

P2-6 P2-7 P2-8 P2-9 SECTION 1"=1'-0"
C-07-50

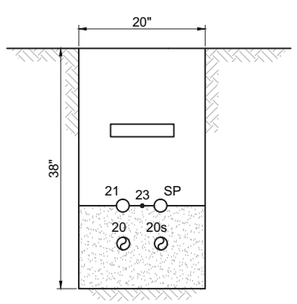

P2-10 SECTION 1"=1'-0"
C-07-50

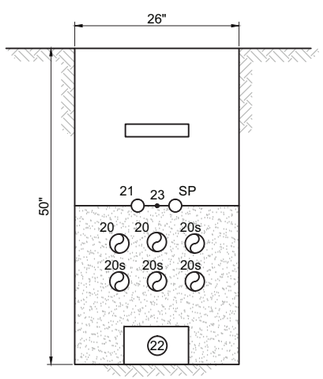

P2-11 P2-12 P2-13 SECTION 1"=1'-0"
C-07-44, 49

- DRAFT -
NOT FOR CONSTRUCTION

ETIC ENGINEERING

ARCADIS

NO.	DATE	DESCRIPTION	GM/SPEC	DWN	CHKD	SUPV	APVD BY
1	09/08/14	PRE-FINAL (90%) DESIGN		AJW	BAS	JPB	JEF
0	04/05/13	INTERMEDIATE (60%) DESIGN		AJW	KLD	JPB	JEF

REVISIONS

APPROVED BY: JEF

SO	
SUPV	JPB
DSGN	BAS
DWN	AJW
CHKD	JPB
OK	JEF
DATE	09/08/14
SCALES	1" = 1'-0"

TOPOCK GROUNDWATER REMEDIATION PROJECT

ELECTRICAL TRENCH SECTIONS

GAS TRANSMISSION & DISTRIBUTION
PACIFIC GAS AND ELECTRIC COMPANY
SAN FRANCISCO, CALIFORNIA

MICROFILM
BILL OF MATL
DWG LIST
SUPSDS
SUPSD BY
SHEET NO. of SHEETS
C-07-120
REV 1

08/27/2014, 15:34, G:\Graphics\AR\TOPOCK-01\Post 90%\C-07-108 to 122_Pipe Trench\Details.dwg, Tab: C-07-120

N1B08

PIPE ID	SERVICE
20	480V POWER CONDUIT (2", U.N.O)
21	COMMUNICATIONS CONDUIT (2")
22	12kV POWER (3")
23	#2/0 BARE COPPER GROUND
SP	SPARE CONDUIT

NOTE
1. SEE CONDUIT AND CABLE SCHEDULES AND SINGLE LINE DIAGRAMS ON SHEETS E-00-05 THRU E-00-13.
2. BEDDING SHALL EXTEND HALF WAY UP TOP CONDUIT PER THE SPECIFICATIONS.
3. CASING SPACERS NOT SHOWN FOR CLARITY

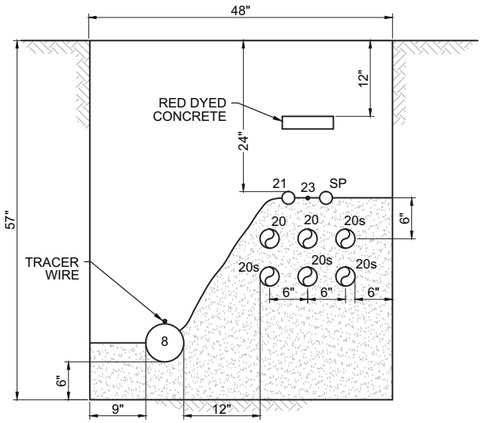

P2-14 P2-15 P2-16 P2-17 SECTION 1"=1'-0"
C-07-58

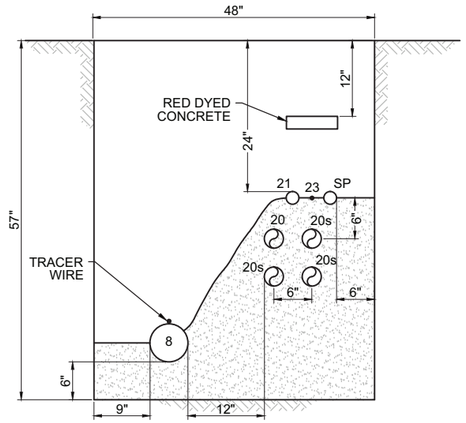

P2-18 P2-19 SECTION 1"=1'-0"
C-07-56, 57

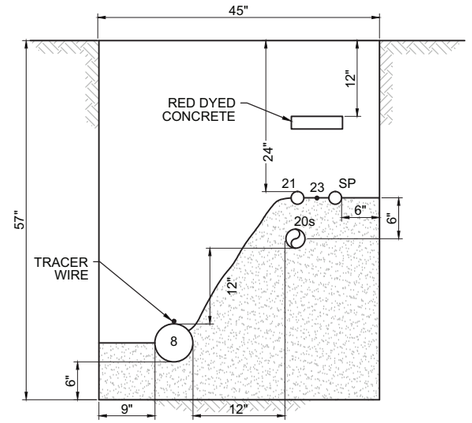

P2-20 SECTION 1"=1'-0"
C-07-56

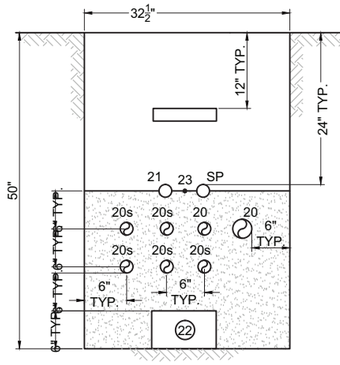

P3-1 SECTION 1"=1'-0"
C-07-41

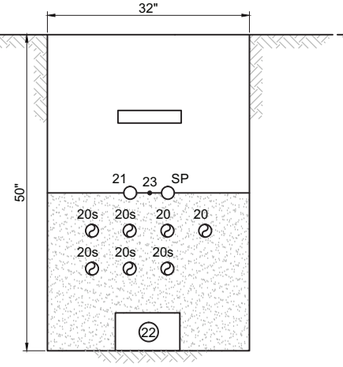

P3-2 SECTION 1"=1'-0"
C-07-41

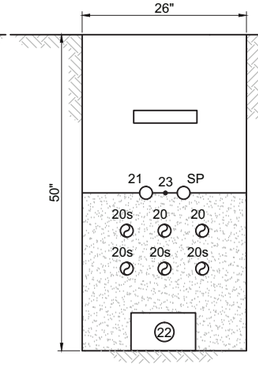

P3-3 SECTION 1"=1'-0"
C-07-41

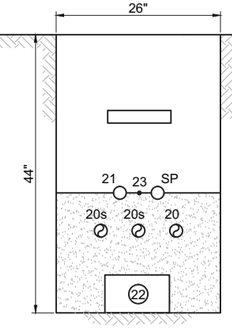

P3-4 P3-5 SECTION 1"=1'-0"
C-07-41 C-07-41

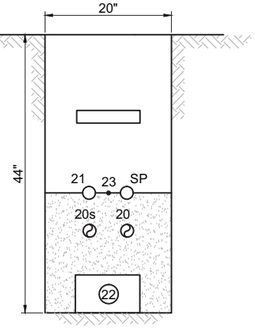

P3-6 P3-7 SECTION 1"=1'-0"
C-07-41

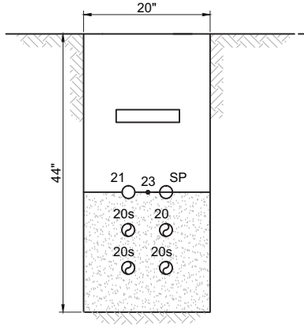

P3-10 P3-11 P3-12 P3-13 SECTION 1"=1'-0"
C-07-42

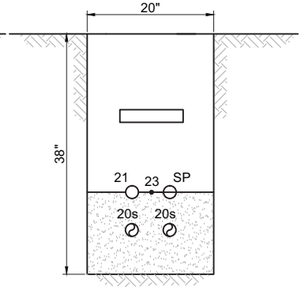

P3-14 SECTION 1"=1'-0"
C-07-42

C-07-42

- DRAFT -
NOT FOR CONSTRUCTION

ETIC ENGINEERING

ARCADIS

NO.	DATE	DESCRIPTION	GM/SPEC	DWN	CHKD	SUPV	APVD BY
1	09/08/14	PRE-FINAL (90%) DESIGN		AJW	BAS	JPB	JEF
0	04/05/13	INTERMEDIATE (60%) DESIGN		AJW	KLD	JPB	JEF

REVISIONS

APPROVED BY: JEF

SO	
SUPV	JPB
DSGN	BAS
DWN	AJW
CHKD	JPB
OK	JEF
DATE	09/08/14
SCALES	1" = 1'-0"

TOPOCK GROUNDWATER REMEDIATION PROJECT

ELECTRICAL TRENCH SECTIONS

GAS TRANSMISSION & DISTRIBUTION
PACIFIC GAS AND ELECTRIC COMPANY
SAN FRANCISCO, CALIFORNIA

MICROFILM
BILL OF MATL
DWG LIST
SUPSDS
SUPSD BY
SHEET NO. of SHEETS
C-07-121
REV 1

N1808

08/27/2014, 15:34, G:\Graphics\AR\TOPOCK-01\Post 90%\C-07-108 to 122_Pipe Trench\Details.dwg, Tab: C-07-121

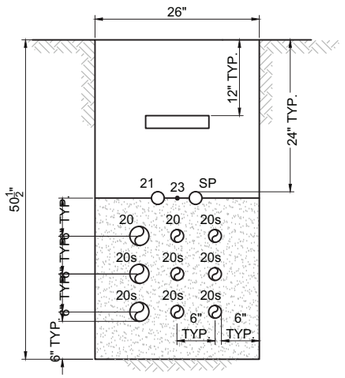

P4-1 P4-2 SECTION 1"=1'-0"
C-07-40

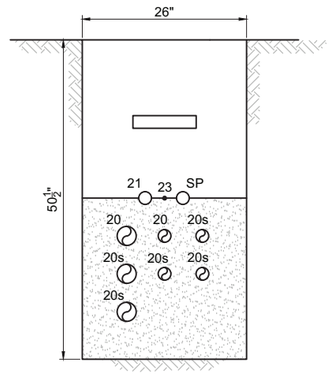

P4-3 SECTION 1"=1'-0"
C-07-39, 40

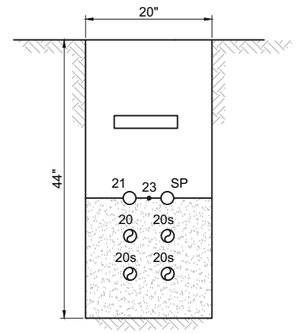

P4-4 P4-5 P4-6 P4-7 SECTION 1"=1'-0"
C-07-39

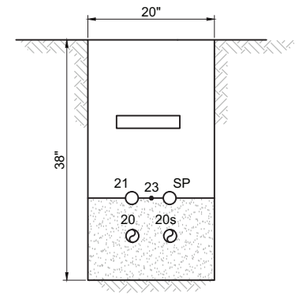

P4-8 SECTION 1"=1'-0"
C-07-39

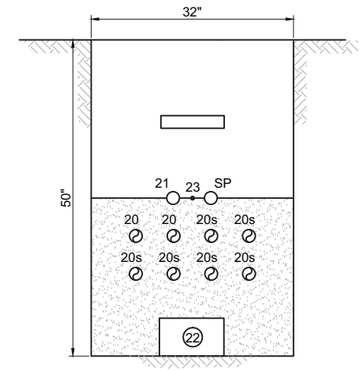

P4-9 P4-10 P4-11 SECTION 1"=1'-0"
C-07-40

PIPE ID	SERVICE
20	480V POWER CONDUIT (2", U.N.O)
21	COMMUNICATIONS CONDUIT (2")
22	12kV POWER (3")
23	#2/0 BARE COPPER GROUND
SP	SPARE CONDUIT

NOTE
1. SEE CONDUIT AND CABLE SCHEDULES AND SINGLE LINE DIAGRAMS ON SHEETS E-00-05 THRU E-00-13.
2. CASING SPACERS NOT SHOWN FOR CLARITY.

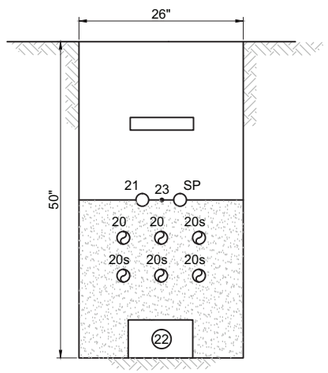

P4-12 SECTION 1"=1'-0"
C-07-40

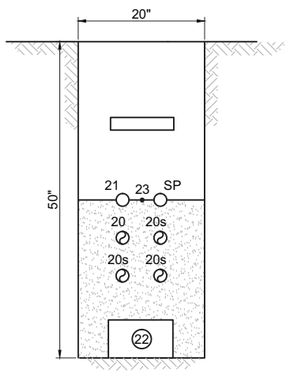

P4-13 P4-14 P4-15 SECTION 1"=1'-0"
C-07-40, 41

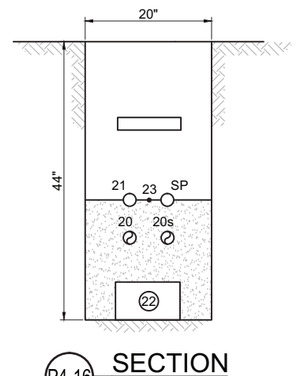

P4-16 SECTION 1"=1'-0"
C-07-41

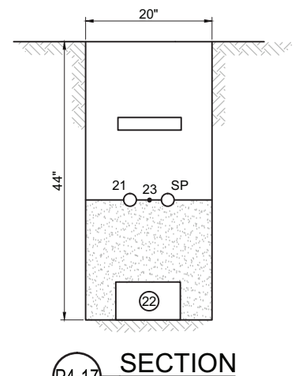

P4-17 SECTION 1"=1'-0"
C-07-41

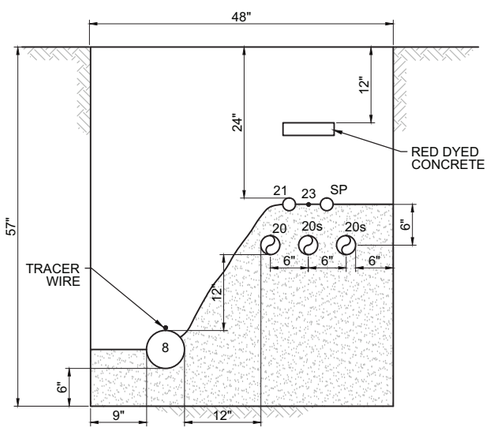

P4-18 P4-19 SECTION 1"=1'-0"
C-07-54, 55

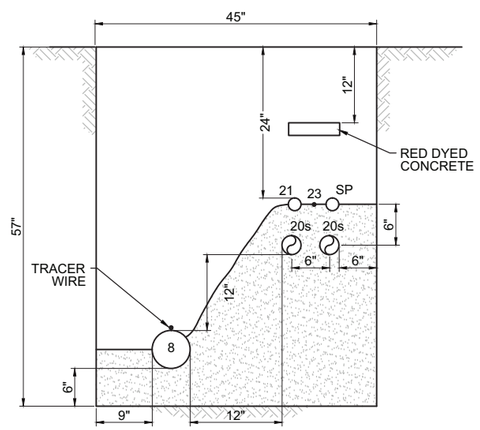

P4-20 P4-21 SECTION 1"=1'-0"
C-07-55, 56

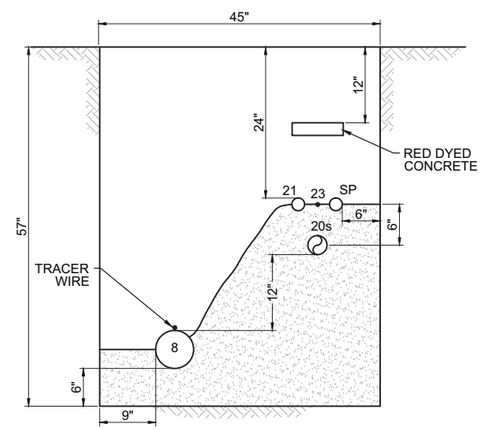

P4-22 SECTION 1"=1'-0"
C-07-56

- DRAFT -
NOT FOR
CONSTRUCTION

ETIC ENGINEERING

ARCADIS

NO.	DATE	DESCRIPTION	GM/SPEC	DWN	CHKD	SUPV	APVD BY
1	09/08/14	PRE-FINAL (90%) DESIGN		AJW	BAS	JPB	JEF
0	04/05/13	INTERMEDIATE (60%) DESIGN		AJW	KLD	JPB	JEF

REVISIONS

APPROVED BY: JEF

SO	
SUPV	JPB
DSGN	BAS
DWN	AJW
CHKD	JPB
OK	JEF
DATE	09/08/14
SCALES	1" = 1'-0"

TOPOCK GROUNDWATER REMEDIATION PROJECT

ELECTRICAL TRENCH SECTIONS

GAS TRANSMISSION & DISTRIBUTION
PACIFIC GAS AND ELECTRIC COMPANY
SAN FRANCISCO, CALIFORNIA

MICROFILM
BILL OF MATL
DWG LIST
SUPSDS
SUPSD BY
SHEET NO. of SHEETS
C-07-122
REV 1

08/27/2014, 15:34, G:\Graphics\ART\TOPOCK-01\Post 90%\C-07-108 to 122_Pipe Trench\Details.dwg, Tab: C-07-122

N1808

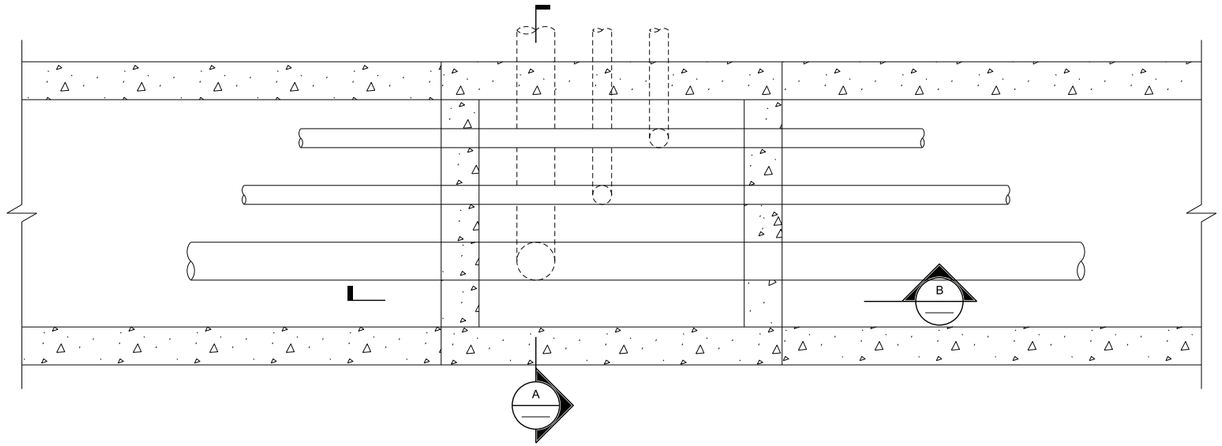

TYPICAL CONCRETE TRENCH PENETRATION

1 DETAIL
1"=1'-0"

NOTE:

1. PIPELINES SHOWN ARE TYPICAL ONLY. FOR SPECIFIC REQUIEREMENTS REFER TO PLAN AND PROFILE DRAWINGS

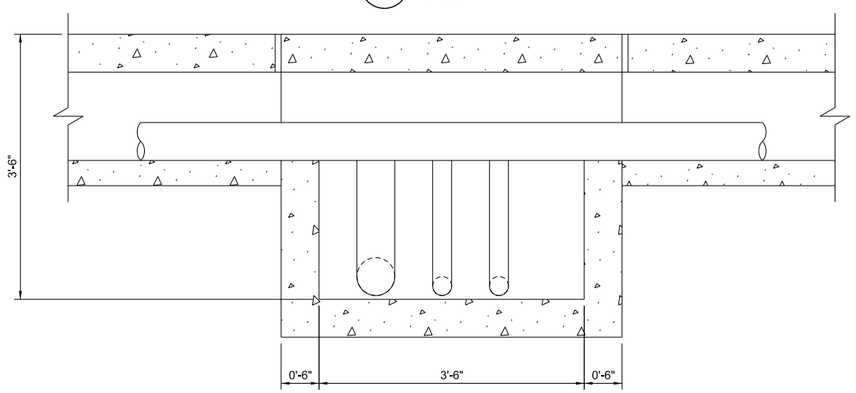

B SECTION
1"=1'-0"

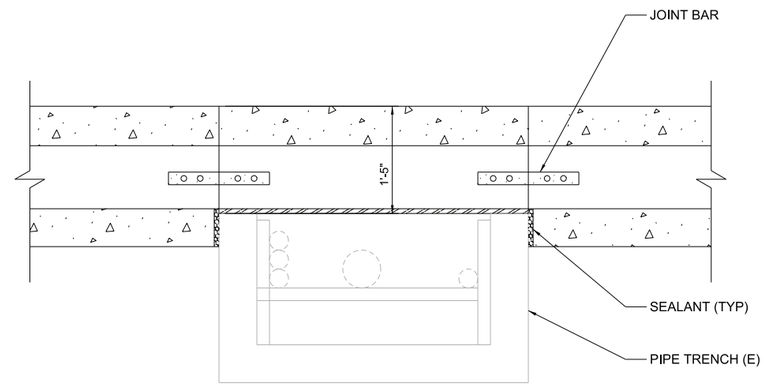

C SECTION
1"=1'-0"

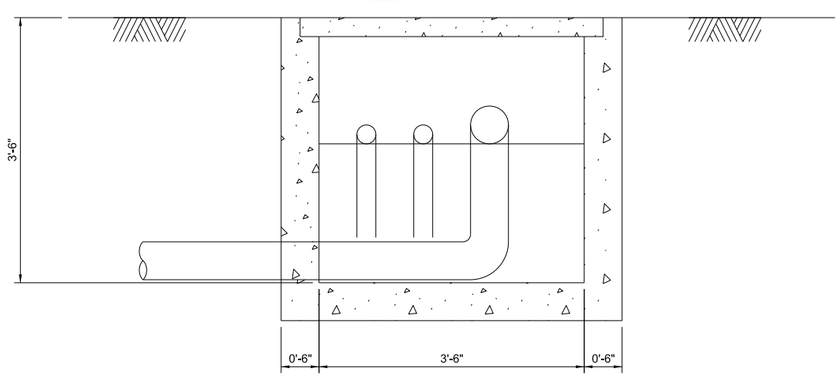

A SECTION
1"=1'-0"

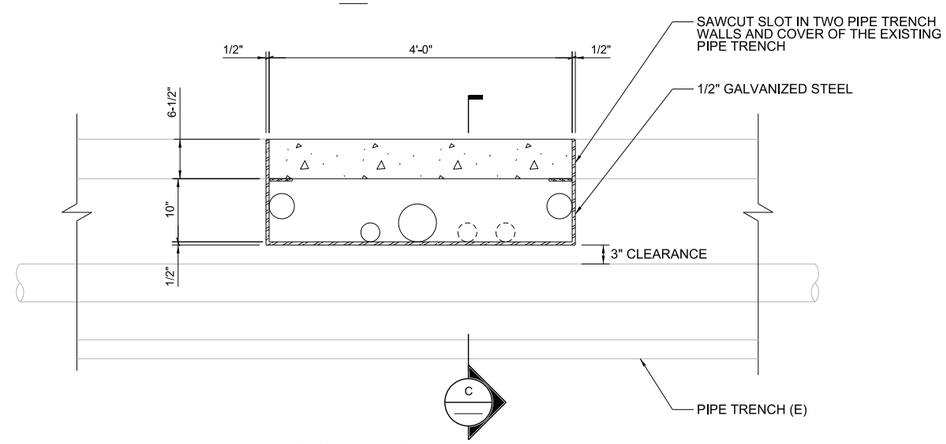

EXISTING PIPE TRENCH CROSSING

2 DETAIL
1"=1'-0"
C-07-49

- DRAFT - NOT FOR CONSTRUCTION

AECOM
2101 WEBSTER STREET SUITE 1000
OAKLAND, CA 94612-3060
PROJECT NO. 60272335

NO.	DATE	DESCRIPTION	GM/SPEC	DWN	CHKD	SUPV	APVD BY
1	9/8/14	PRE-FINAL (90%) DESIGN					
0	4/5/13	INTERMEDIATE (60%) DESIGN					

REVISIONS

APPROVED BY		
	SO	XXXXX
	SUPV	PD
	DSGN	TL
	DWN	GO
	CHKD	JM
	OK	PD
	DATE	9/8/14
	SCALES	1" = 1'-0"

TOPOCK GROUNDWATER REMEDIATION PROJECT

INTERSECTION DETAILS

GAS TRANSMISSION & DISTRIBUTION
PACIFIC GAS AND ELECTRIC COMPANY
SAN FRANCISCO, CALIFORNIA

MICROFILM	
BILL OF MATL	
DWG LIST	
SUPSDS	
SUPSD BY	
SHEET NO. OF	SHEETS
C-07-123	REV 1

N1808

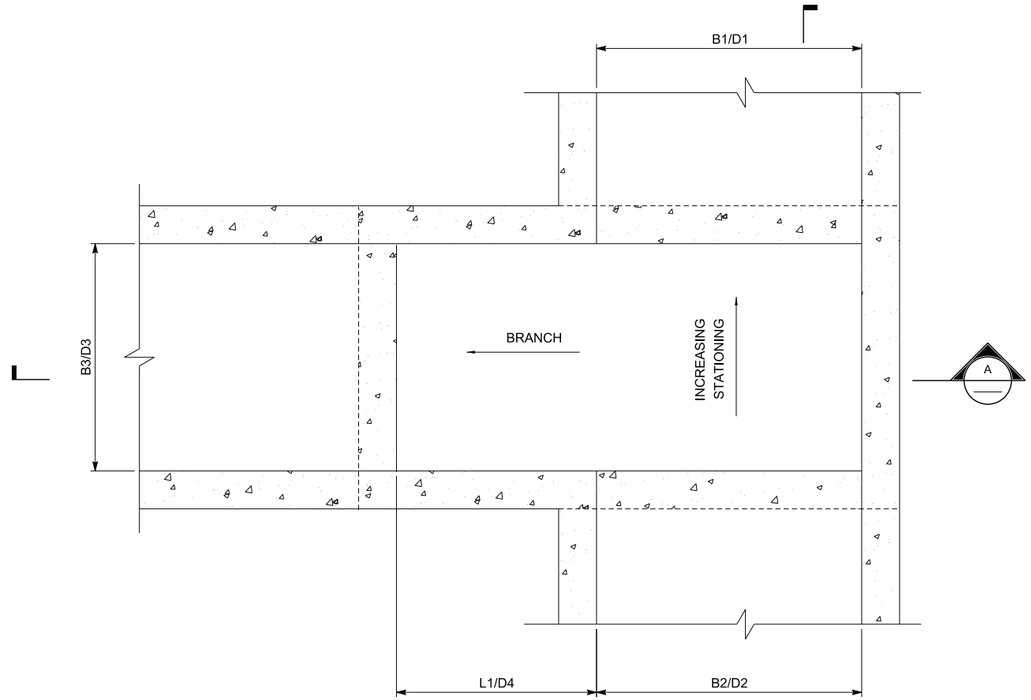

TYPICAL CONCRETE TRENCH JUNCTION BOX

3 DETAIL
NTS

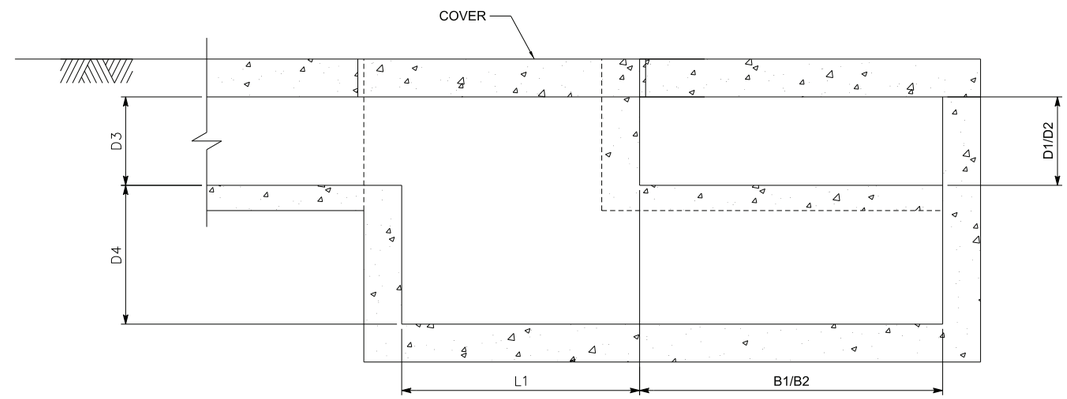

A SECTION
NTS

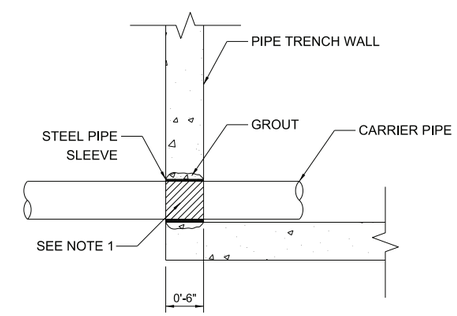

PIPE TRENCH WALL PENETRATION

4 DETAIL
NTS

NOTE:

1. BARRIER PIPE WITH ELASTOMETRIC TAPE AND SEAL ANNULAR SPACE WITH MASTIC.

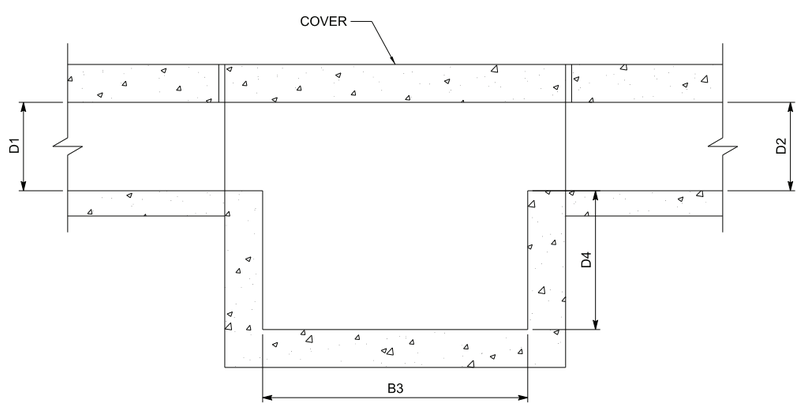

B SECTION
NTS

TABLE 1 JUNCTION BOXES

PJ#	B1	B2	B3	D1	D2	D3	D4	L1	ANGLE
1	5' - 0"	5' - 0"	4' - 0"	1' - 4"	1' - 4"	1' - 4"	4' - 0"	4' - 0"	90°
2	4' - 0"	4' - 0"	5' - 0"	1' - 4"	1' - 4"	1' - 4"	4' - 0"	4' - 0"	110°
3	4' - 0"	4' - 0"	4' - 0"	10"	10"	1' - 4"	4' - 0"	4' - 0"	90°
4	4' - 0"	5' - 0"	4' - 0"	10"	10"	10"	3' - 6"	4' - 0"	90°
5	-	-	-	-	-	-	-	-	-

- DRAFT - NOT FOR CONSTRUCTION

AECOM
2101 WEBSTER STREET SUITE 1000
OAKLAND, CA 94612-3060

PROJECT NO. 60272335

NO.	DATE	DESCRIPTION	GM/SPEC	DWN	CHKD	SUPV	APVD BY
0	9/8/14	PRE-FINAL (90%) DESIGN					

REVISIONS

APPROVED BY
SO XXXXX
SUPV PD
DSGN SK
DWN GO
CHKD JM
OK PD
DATE 9/8/14
SCALES AS SHOWN

TOPOCK GROUNDWATER REMEDIATION PROJECT

INTERSECTION DETAILS

GAS TRANSMISSION & DISTRIBUTION
PACIFIC GAS AND ELECTRIC COMPANY
SAN FRANCISCO, CALIFORNIA

MICROFILM
BILL OF MATL
DWG LIST
SUPSDS
SUPSD BY
SHEET NO. OF SHEETS
C-07-124
REV 0

N1808

NOTE:

1. PIPELINES SHOWN ARE TYPICAL ONLY. FOR SPECIFIC REQUIEREMENTS REFER TO PLAN AND PROFILE DRAWINGS

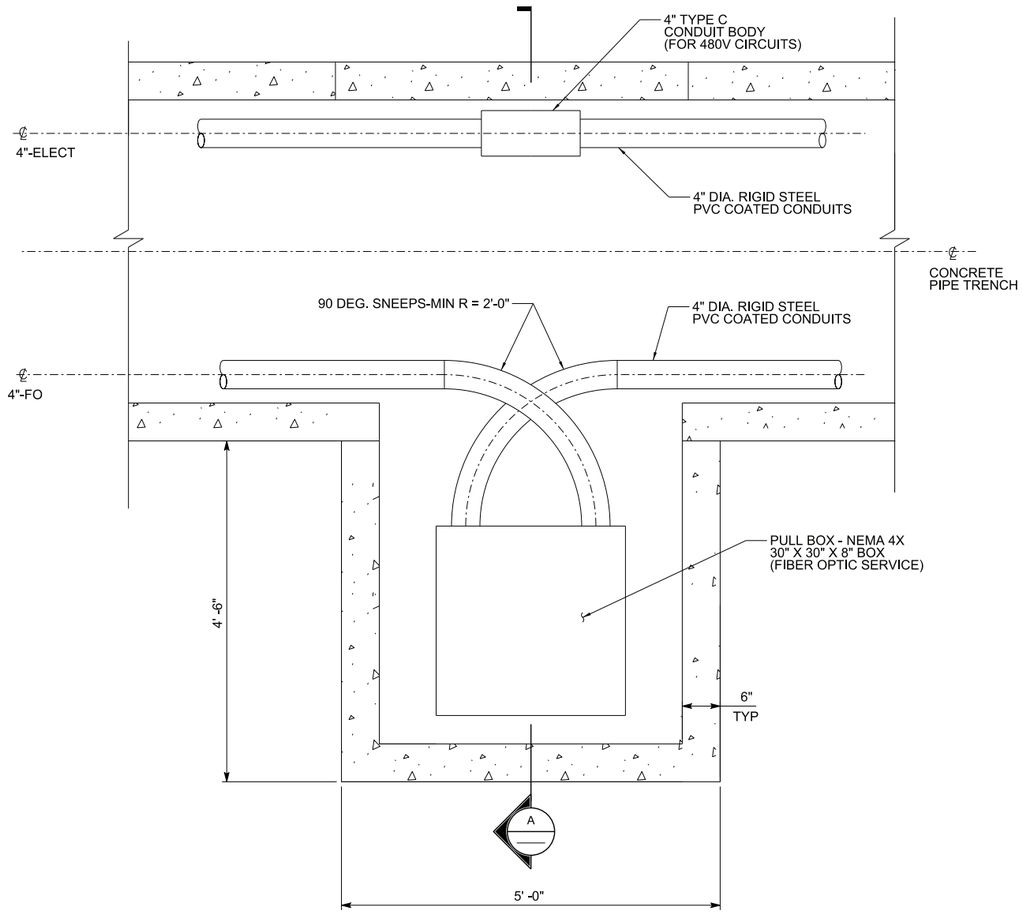

TYPICAL PULL BOX (IN TRENCH)

1 DETAIL
1"=1'-0"

C-07-125

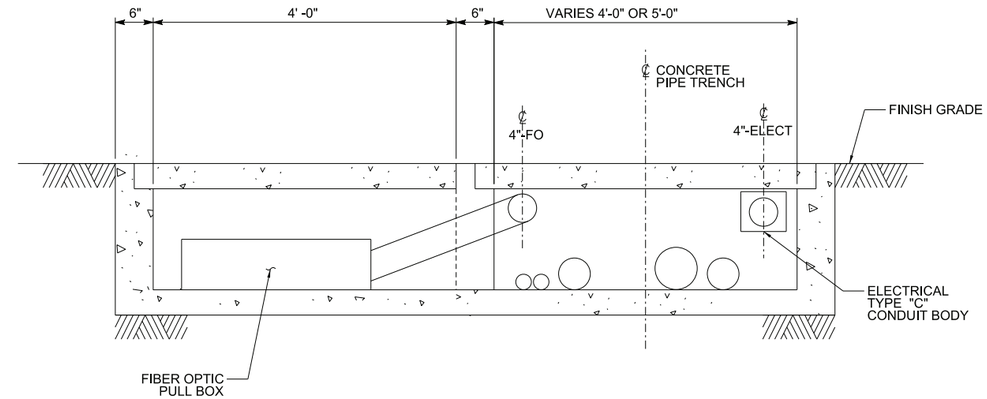

A SECTION
1"=1'-0"

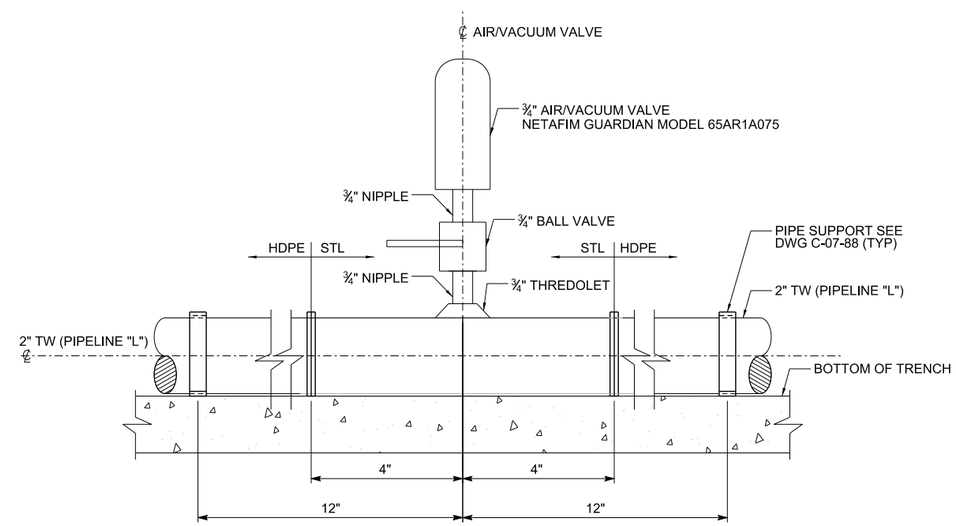

AIR/VACUUM VALVE

2 DETAIL
2"=1'-0"

C-07-74

- DRAFT -
NOT FOR CONSTRUCTION

AECOM
2101 WEBSTER STREET SUITE 1000
OAKLAND, CA 94612-3060

PROJECT NO. 60272335

NO.	DATE	DESCRIPTION	GM/SPEC	DWN	CHKD	SUPV	APVD BY
0	9/8/14	PRE-FINAL (90%) DESIGN					

REVISIONS

APPROVED BY		
	SO	XXXXX
	SUPV	PD
	DSGN	MP
	DWN	GO
	CHKD	JM
	OK	PD
	DATE	9/8/14
	SCALES	1" = 1'-0"

TOPOCK GROUNDWATER REMEDIATION PROJECT

INTERSECTION DETAILS

GAS TRANSMISSION & DISTRIBUTION
PACIFIC GAS AND ELECTRIC COMPANY
SAN FRANCISCO, CALIFORNIA

MICROFILM	
BILL OF MATL	
DWG LIST	
SUPSDS	
SUPSD BY	
SHEET NO. OF	SHEETS
C-07-125	REV 0

N1808

							REMEDY PIPES									
Pipeline	Profile Sheet	Sta	Utility Owner	Utility Pipe Diameter (in)	Crossing Detail	Minimum Clearance (ft)	FW	RW	CA	TW	ELECT	12 kV ELECT	FIBER OPTIC	DRAIN	SPARE	Trench Section Sheet
A	C-07-21	28+10	Pacific Gas & Electric	4	1	1	2-6	6	6		2	4	4, 2		6, 2	C-07-100
A	C-07-23	41+40	Pacific Gas & Electric	20 -1	1	1	2-6	8	6			4	4		8	C-07-100
A	C-07-23	44+52	Southwestern Gas	4	1	2	2-6	8	6			4	4		8	C-07-100
A	C-07-23	53+80	Pacific Gas & Electric	20 -1	2	1	2-6	8	8			4	4		8	C-07-102
B	C-07-30	43+XX	Pacific Gas & Electric	30	1	2	12									C-07-101
B	C-07-30	43+XX	Kinder Morgan	30?	1	2	12									C-07-101
B	C-07-30	44+XX	Pacific Gas & Electric	30?	1	2	12									C-07-101
B	C-07-30	48+60	Transwestern Gas	24	1	2	12									C-07-101
B	C-07-31	51+00	Southwestern Water	2	none[1]	1	12									C-07-101
B	C-07-31	51+75	Mojave Electric	?	2	1.5	12									C-07-101
B	C-07-31	52+40	Mojave Electric	?	2	1.5	12									C-07-101
H	C-07-25	15+08	Southwestern Gas	4	1	2	6	6	6		3-2		2		6, 2	C-07-101
H	C-07-25	12+40	Southern Californa Gas	30	1	2	6	6	6		4		2	4	6, 2	C-07-101
I	C-07-78	12+20	Pacific Gas & Electric	30	1	2	2	4			4		2		4, 2	C-07-102
I	C-07-78	12+55	Pacific Gas & Electric	2	none[1]	1	2	4			4		2		4, 2	C-07-101

1 - Relocate interfering utility

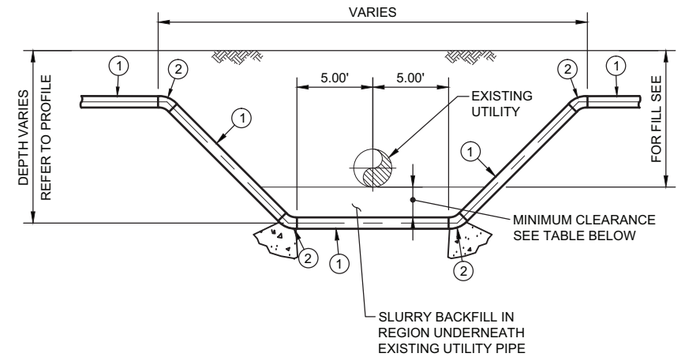

KEY

(1) HDPE SDR 11 (STEEL PIPE SIZE) = PRESSURE RATING = 200 PSI PER AWWA C-906 AND ASTM C-3408.

(2) HDPE BUTT FUSED 45 DEGREE ELBOW PER ANSI/AWWA C-906 AND ASTM C-3408

1 UNDER CROSSING DETAIL

N.T.S.

VARIES, SEE TABLE

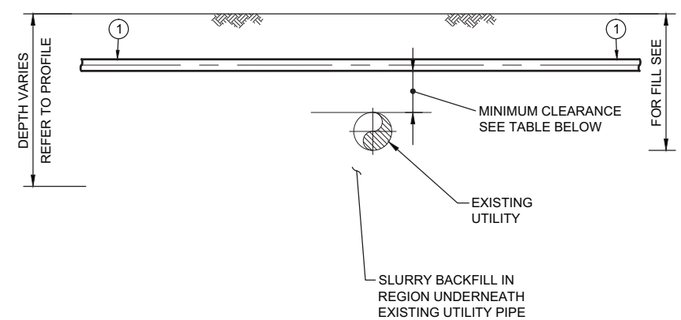

KEY

(1) HDPE SDR 11 (STEEL PIPE SIZE) = PRESSURE RATING = 200 PSI PER AWWA C-906 AND ASTM C-3408.

2 OVER CROSSING DETAIL

N.T.S.

VARIES, SEE TABLE

DRAFT
NOT FOR
CONSTRUCTION

E2 Consulting Engineers, Inc.
1900 Powell Street, Ste. 250
Emeryville, CA 94608
(510) 652-1164

CH2MHILL.

NO.	DATE	DESCRIPTION	GM/SPEC	DWN	CHKD	SUPV	APVD BY
1	6/30/14	90% SUBMITTAL		PH	VMB	VMB	VMB

REVISIONS

APPROVED BY
SO
SUPV VMB
DSGN PT
DWN WTH
CHKD VMB
OK VMB
DATE 6/30/14
SCALES N.T.S

TOPOCK GROUNDWATER REMEDIATION PROJECT
CROSSING DETAILS

GAS TRANSMISSION & DISTRIBUTION
PACIFIC GAS AND ELECTRIC COMPANY
SAN FRANCISCO, CALIFORNIA

MICROFILM
BILL OF MATL
DWG LIST
SUPSDS
SUPSD BY
SHEET NO. of SHEETS
C-07-126
REV 1

FILENAME: E2-C-XXX-07126.d
PLOT DATE: PLOTDATE PLOT TIME: PLOTTIME

N1808

C:\Users\peter.hubbard\CAD\Topock\E2-C-XXX-07126.dwg 22X36, 6/23/2014 12:39:55 PM

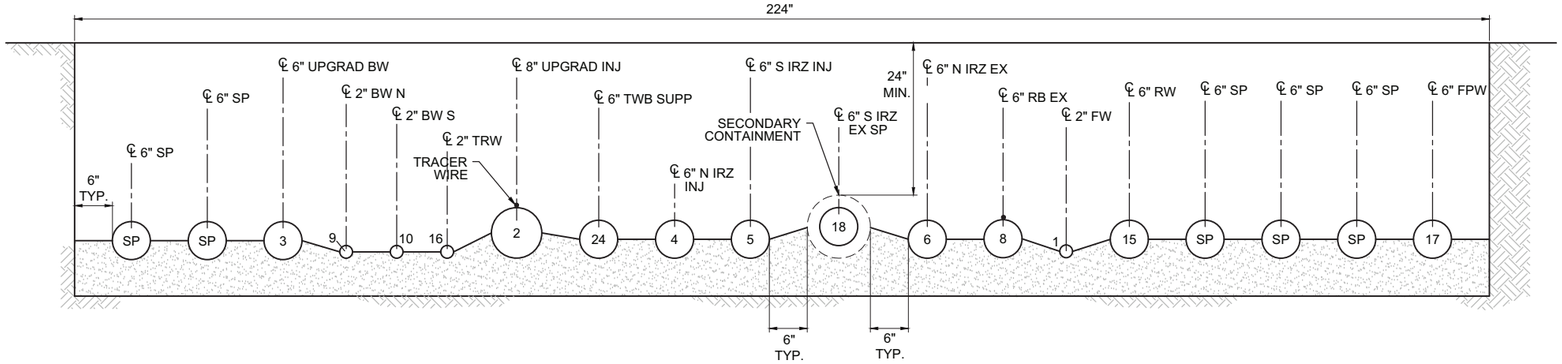

CA SECTION 1"=1'-0"
C-07-41

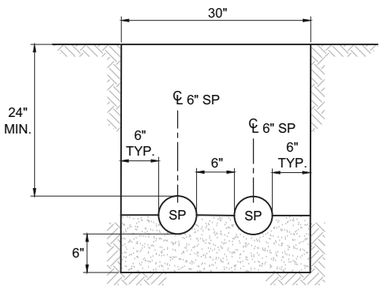

CB SECTION 1"=1'-0"
C-07-39

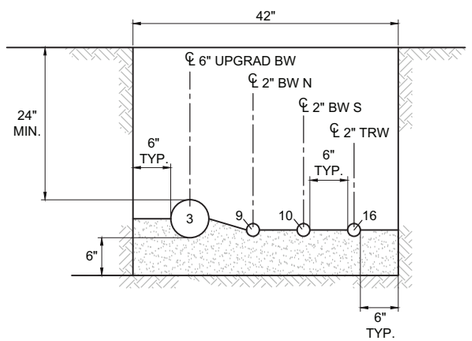

CC SECTION 1"=1'-0"
C-07-39,-40

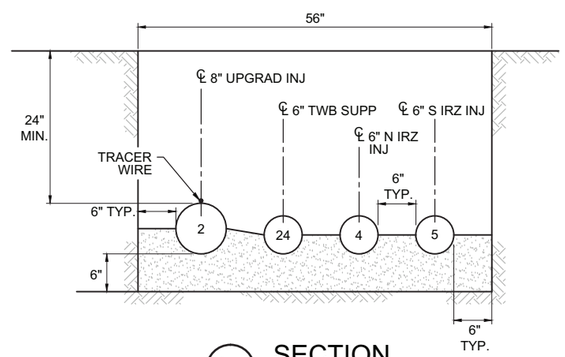

CD SECTION 1"=1'-0"
C-07-39,-40

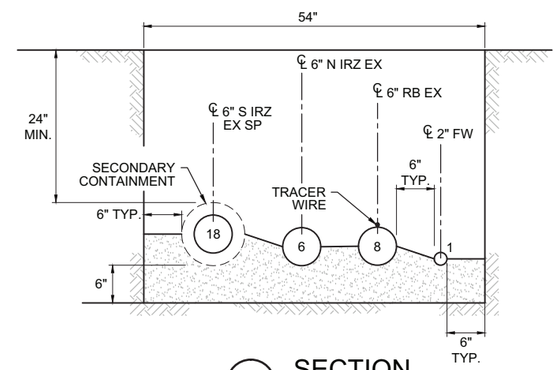

CE SECTION 1"=1'-0"
C-07-39,-40

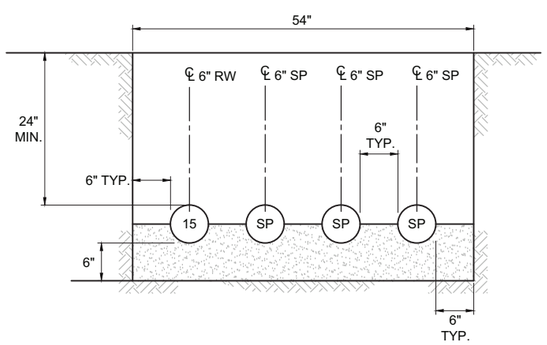

CF SECTION 1"=1'-0"
C-07-39,-40

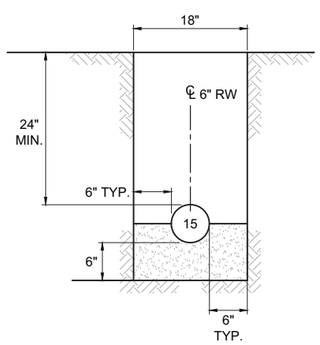

CG SECTION 1"=1'-0"
C-07-39,-40

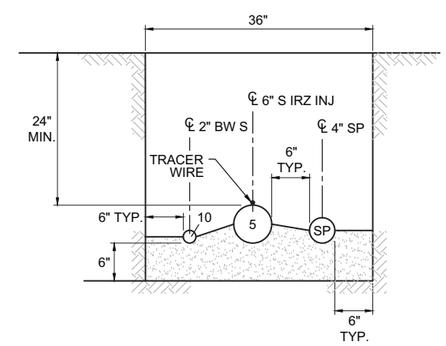

CH SECTION 1"=1'-0"
C-07-39,-40

PIPE ID	SERVICE
1	FRESH WATER INJECTION LOOP
2	UPGRADIENT INJECTION
3	UPGRADIENT BACKWASH
4	NORTH IRZ INJECTION (1-22)
5	SOUTH IRZ INJECTION (24-40)
6	NORTHERN IRZ EXTRACTION
7	IRZ-23 EXTRACTION
8	RIVERBANK EXTRACTION
9	BACKWASH NORTH
10	BACKWASH SOUTH
11	EAST RAVINE EXTRACTION WELL NETWORK HEADER
12	NORTHEAST OF TCS EXTRACTION WELL NETWORK HEADER
13	TCS INJECTION
14	TCS BACKWASH
15	REMEDY WASTEWATER
16	TREATED WATER
17	FIRE PROTECTION WATER
18	SOUTH IRZ EXTRACTION SPARE
19	EAST RAVINE ER-6 EXTRACTION
20	480V POWER CONDUIT
21	COMMUNICATIONS CONDUIT
22	12kV POWER
23	#2/0 BARE COPPER GROUND
24	TWB SUPPLEMENTAL FLOW
25	TWB EXTRACTION WELL NETWORK HEADER
CA	CARBON AMENDED WATER
PO	POTABLE WATER
SP	SPARE PIPE
SP(e)	SPARE ELECTRICAL CONDUIT

NOTES:

1. SAND SHALL BE USED FROM THE BASE OF THE TRENCH TO 6 INCHES ABOVE THE TOP OF PIPES. SOILS FROM THE TRENCH EXCAVATION SHALL BE MOISTURE CONDITIONED AND USED AS BACKFILL. COMPACT TO 95% RELATIVE COMPACTION TO 12 INCHES BELOW GRADE. FOUR INCHES OF AS-CLASS 2 MATERIAL SHALL BE PLACED ON TOP OF THE COMPACTED SOIL FOLLOWED BY 4 INCHES OF AB-CLASS 2. THE ROADBASE SHALL BE TOPPED WITH A 2-INCH BASE COURSE LAYER AND CAPPED WITH A 2-INCH HMA PG 70-10 SURFACE COURSE.
2. PIPE SUPPORTS AND CLEANOUTS NOT SHOWN FOR CLARITY.
3. ALL COVERS SHALL BE TRAFFIC RATED.
4. CASING SPACERS NOT SHOWN FOR CLARITY.
5. PIPE BEDDING SHALL EXTEND HALF WAY UP THE PIPES PER THE SPECIFICATIONS.

- DRAFT -
NOT FOR CONSTRUCTION

ETIC ENGINEERING

ARCADIS

NO.	DATE	DESCRIPTION	GM/SPEC	DWN	CHKD	SUPV	APVD BY
0	09/08/14	PRE-FINAL (90%) DESIGN		AJW	BAS	JPB	JEF

REVISIONS

APPROVED BY: JEF

SO	
SUPV	JPB
DSGN	BAS
DWN	AJW
CHKD	JPB
OK	JEF
DATE	09/08/14
SCALES	1" = 1'-0"

TOPOCK GROUNDWATER REMEDIATION PROJECT
MW-20 BENCH AREA
TRENCH SECTIONS
SHEET 1 OF 2
GAS TRANSMISSION & DISTRIBUTION
PACIFIC GAS AND ELECTRIC COMPANY
SAN FRANCISCO, CALIFORNIA

MICROFILM
BILL OF MATL
DWG LIST
SUPSDS
SUPSD BY
SHEET NO. of SHEETS
C-07-127
REV 0

08/27/2014, 12:03, G:\Graphics\AR\TOPOCK-01\Post 90%\C-07-127-128_MW-20_Bench_PipeTrenchDetails.dwg, Tab: C-07-127

N1808

PIPE ID	SERVICE
26	WELL MAINENANCE ROOM SUPPLY -- TO BACKWASH FRAC TANK
27	CONDITIONED WATER -- TO CONDITIONED WATER FRAC TANK
28	BACKWASH WATER -- TO CARBON AMENDMENT BUILDING
29	C.I.P. WATER -- TO CARBON AMENDMENT BUILDING
30	C.I.P. RETURN -- TO C.I.P. TANK FROM CARBON AMENDMENT BUILDING
31	FRESHWATER -- TO C.I.P. TANK FROM CARBON AMENDMENT BUILDING
32	C.I.P. REAGENT -- TO C.I.P. TANK FROM OFFLOADING AREA
33	FIRE PROTECTION WATER LINE
34	WELL MAINTENANCE LINE
35	CARBON TANK FILL LINE
36	VAPOR RECOVERY LINE
37	CARBON LINE -- FROM CARBON TANK TO CARBON AMENDMENT BUILDING

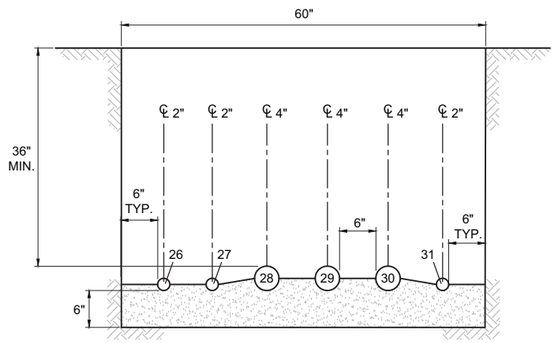

CI SECTION 1"=1'-0"
C-07-39

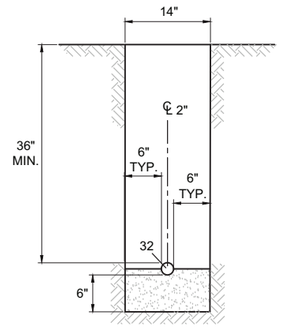

CJ SECTION 1"=1'-0"
C-07-39,-40

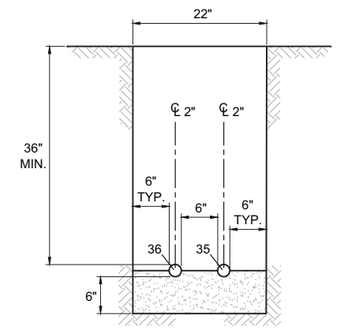

CK SECTION 1"=1'-0"
C-07-39,-40

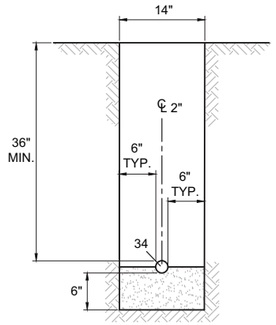

CL SECTION 1"=1'-0"
C-07-39,-40

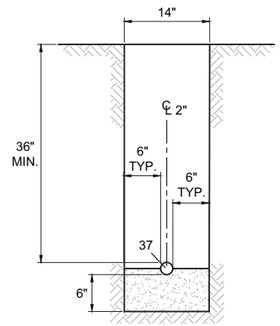

CM SECTION 1"=1'-0"
C-07-39,-40

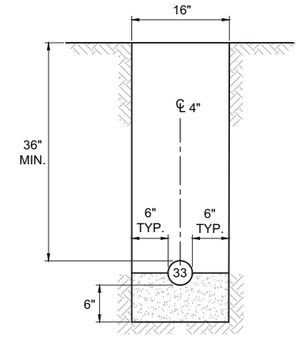

CN SECTION 1"=1'-0"
C-07-39,-40

NOTES:

1. SAND SHALL BE USED FROM THE BASE OF THE TRENCH TO 6 INCHES ABOVE THE TOP OF PIPES. SOILS FROM THE TRENCH EXCAVATION SHALL BE MOISTURE CONDITIONED AND USED AS BACKFILL. COMPACT TO 95% RELATIVE COMPACTION TO 12 INCHES BELOW GRADE. FOUR INCHES OF AS-CLASS 2 MATERIAL SHALL BE PLACED ON TOP OF THE COMPACTED SOIL FOLLOWED BY 4 INCHES OF AB-CLASS 2. THE ROADBASE SHALL BE TOPPED WITH A 2-INCH BASE COURSE LAYER AND CAPPED WITH A 2-INCH HMA PG 70-10 SURFACE COURSE.
2. PIPE SUPPORTS AND CLEANOUTS NOT SHOWN FOR CLARITY.
3. ALL COVERS SHALL BE TRAFFIC RATED.
4. CASING SPACERS NOT SHOWN FOR CLARITY.
5. PIPE BEDDING SHALL EXTEND HALF WAY UP THE PIPES PER THE SPECIFICATIONS.

- DRAFT -
NOT FOR CONSTRUCTION

ETIC ENGINEERING

ARCADIS

NO.	DATE	DESCRIPTION	GM/SPEC	DWN	CHKD	SUPV	APVD BY
0	09/08/14	PRE-FINAL (90%) DESIGN		AJW	BAS	JPB	JEF

REVISIONS

APPROVED BY: JEF

SO
SUPV JPB
DSGN BAS
DWN AJW
CHKD JPB
OK JEF
DATE 09/08/14
SCALES 1" = 1'-0"

TOPOCK GROUNDWATER REMEDIATION PROJECT
MW-20 BENCH AREA
TRENCH SECTIONS
SHEET 2 OF 2
GAS TRANSMISSION & DISTRIBUTION
PACIFIC GAS AND ELECTRIC COMPANY
SAN FRANCISCO, CALIFORNIA

MICROFILM
BILL OF MATL
DWG LIST
SUPSDS
SUPSD BY
SHEET NO. of SHEETS
C-07-128
REV 0

08/27/2014, 12:04, G:\Graphics\ARI\TOPOCK-01\Post 90%\C-07-127-128_MW-20_Bench_PipeTrenchDetails.dwg, Tab: C-07-128

N1808

0 30 60
SCALE: 1"=30'

LEGEND:

—— W —— CONSTRUCTION WATER LINE

KEY NOTES:

1. LOCATION OF TEMPORARY CONSTRUCTION WATER TANK(S). (12,000 GAL KLEIN-TYPE TOWER TANKS SHOWN WITH SPACE FOR 3 TANKS IF NECESSARY.)
2. 3"- 4" DIA HDPE (MIN DR11) PIPE LAID ON GROUND SURFACE OR SHALLOWLY BURIED. PROVIDE SLACK TO ALLOW RELOCATION AND /OR COVER DURING CONSTRUCTION.
3. PROPOSED LOCATION TO HOT-TAP INTO EXST 6" STEEL WATER LINE. COORDINATE EXACT LOCATION WITH OWNER.
4. GRADE AS NECESSARY TO PROVIDE SUITABLE TRUCK TURN-AROUND, TRANSITION TO HIGHWAY AND TO PREVENT PONDED WATER. PREPARE SUBGRADE AND PROVIDE 6" MIN AGGREGATE BASE MATERIAL ENTIRE TRAVELED AREA.

NOTES:

1. REMOVE TANK(S) AND PIPING AFTER CONSTRUCTION COMPLETION, RESTORE AREA.
2. PROVIDE SUITABLE LEVEL CONTROLS ON SUPPLY PIPE/TANKS TO PREVENT OVER FILLING. PROVIDE PUMP(S) IF NECESSARY TO FILL TANKS.

DRAFT
NOT FOR
CONSTRUCTION

CH2MHILL®

NO.	DATE	DESCRIPTION	GM/SPEC	DWN	CHKD	SUPV	APVD BY
0		PRE-FINAL DESIGN (90%)		RV	NB	CH	NB

REVISIONS

APPROVED BY	
SO	
SUPV	CH
DSGN	RD
DWN	RV
CHKD	NB
OK	
DATE	9/08/14
SCALES	1"=30'

TOPOCK GROUNDWATER REMEDIATION PROJECT

TEMPORARY CONSTRUCTION WATERLINE SYSTEM

GAS TRANSMISSION & DISTRIBUTION
PACIFIC GAS AND ELECTRIC COMPANY
SAN FRANCISCO, CALIFORNIA

MICROFILM
BILL OF MATL
DWG LIST
SUPSDS
SUPSD BY
SHEET NO. XX of SHEETS
C-7-200 REV 1

FILENAME: CH-C-07-200.dgn
PLOT DATE: 2014\08\26 PLOT TIME: 4:01:09 PM

N1808

FILENAME: _____.DGN __-__-04 ____

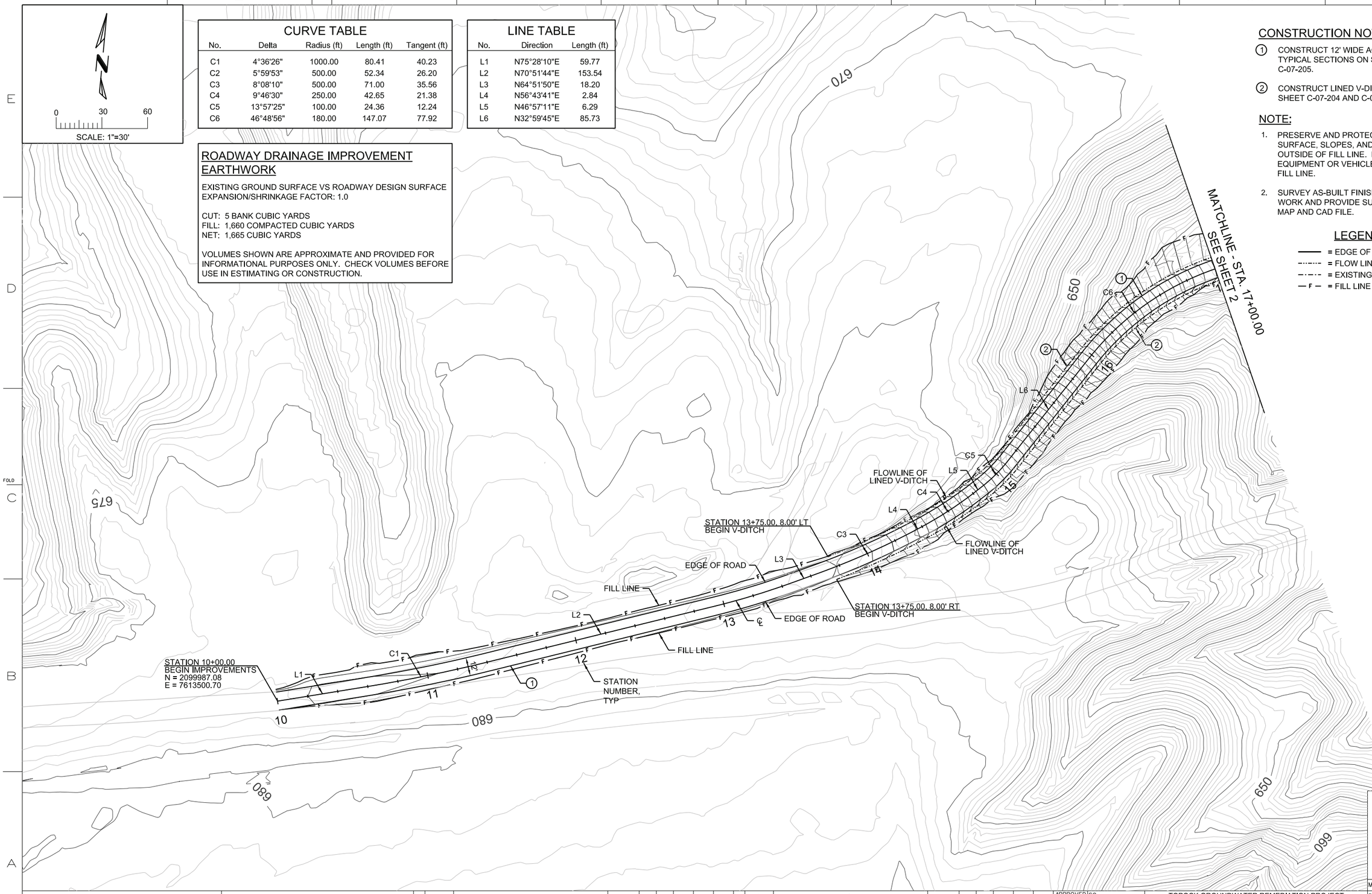

CURVE TABLE

No.	Delta	Radius (ft)	Length (ft)	Tangent (ft)
C1	4°36'26"	1000.00	80.41	40.23
C2	5°59'53"	500.00	52.34	26.20
C3	8°08'10"	500.00	71.00	35.56
C4	9°46'30"	250.00	42.65	21.38
C5	13°57'25"	100.00	24.36	12.24
C6	46°48'56"	180.00	147.07	77.92

LINE TABLE

No.	Direction	Length (ft)
L1	N75°28'10"E	59.77
L2	N70°51'44"E	153.54
L3	N64°51'50"E	18.20
L4	N56°43'41"E	2.84
L5	N46°57'11"E	6.29
L6	N32°59'45"E	85.73

ROADWAY DRAINAGE IMPROVEMENT EARTHWORK

EXISTING GROUND SURFACE VS ROADWAY DESIGN SURFACE
EXPANSION/SHRINKAGE FACTOR: 1.0

CUT: 5 BANK CUBIC YARDS
FILL: 1,660 COMPACTED CUBIC YARDS
NET: 1,665 CUBIC YARDS

VOLUMES SHOWN ARE APPROXIMATE AND PROVIDED FOR INFORMATIONAL PURPOSES ONLY. CHECK VOLUMES BEFORE USE IN ESTIMATING OR CONSTRUCTION.

CONSTRUCTION NOTES:

1. CONSTRUCT 12' WIDE ACCESS ROAD PER TYPICAL SECTIONS ON SHEET C-07-204 AND C-07-205.
2. CONSTRUCT LINED V-DITCH PER DETAILS ON SHEET C-07-204 AND C-07-205.

NOTE:

1. PRESERVE AND PROTECT GROUND SURFACE, SLOPES, AND VEGETATION OUTSIDE OF FILL LINE. DO NOT OPERATE EQUIPMENT OR VEHICLES OUTSIDE OF FILL LINE.
2. SURVEY AS-BUILT FINISH GRADE OF ALL WORK AND PROVIDE SURVEYOR-STAMPED MAP AND CAD FILE.

LEGEND

- ——— = EDGE OF ROAD
- -··-··- = FLOW LINE
- —·—·— = EXISTING FLOW LINE
- —F— = FILL LINE

DRAFT
NOT FOR
CONSTRUCTION

CH2MHILL®

NO.	DATE	DESCRIPTION	GM/SPEC	DWN	CHKD	SUPV	APVD BY
0	09/08/14	PRE-FINAL DESIGN (90%)		SB	MS	CH	NB

REVISIONS

APPROVED BY		
	SO	
	SUPV	CH
	DSGN	SB
	DWN	SB
	CHKD	MS
	OK	
	DATE	6/30/14
	SCALES	1' = 30'

TOPOCK GROUNDWATER REMEDIATION PROJECT
PIPELINE
ROADWAY DRAINAGE IMPROVEMENTS
GAS TRANSMISSION & DISTRIBUTION
PACIFIC GAS AND ELECTRIC COMPANY
SAN FRANCISCO, CALIFORNIA

MICROFILM
BILL OF MATL
DWG LIST
SUPSDS
SUPSD BY
SHEET NO. 1 OF 6 SHEETS
C-07-201 REV 1

FILENAME: PG&E_Border.dgn
PLOT DATE: $PLOTDATE PLOT TIME: $PLOTTIME

N1808

CH-C-07-201.dgn Model 8/26/2014 3:33:04 PM

FILENAME: ____DGN __-__-04 ____

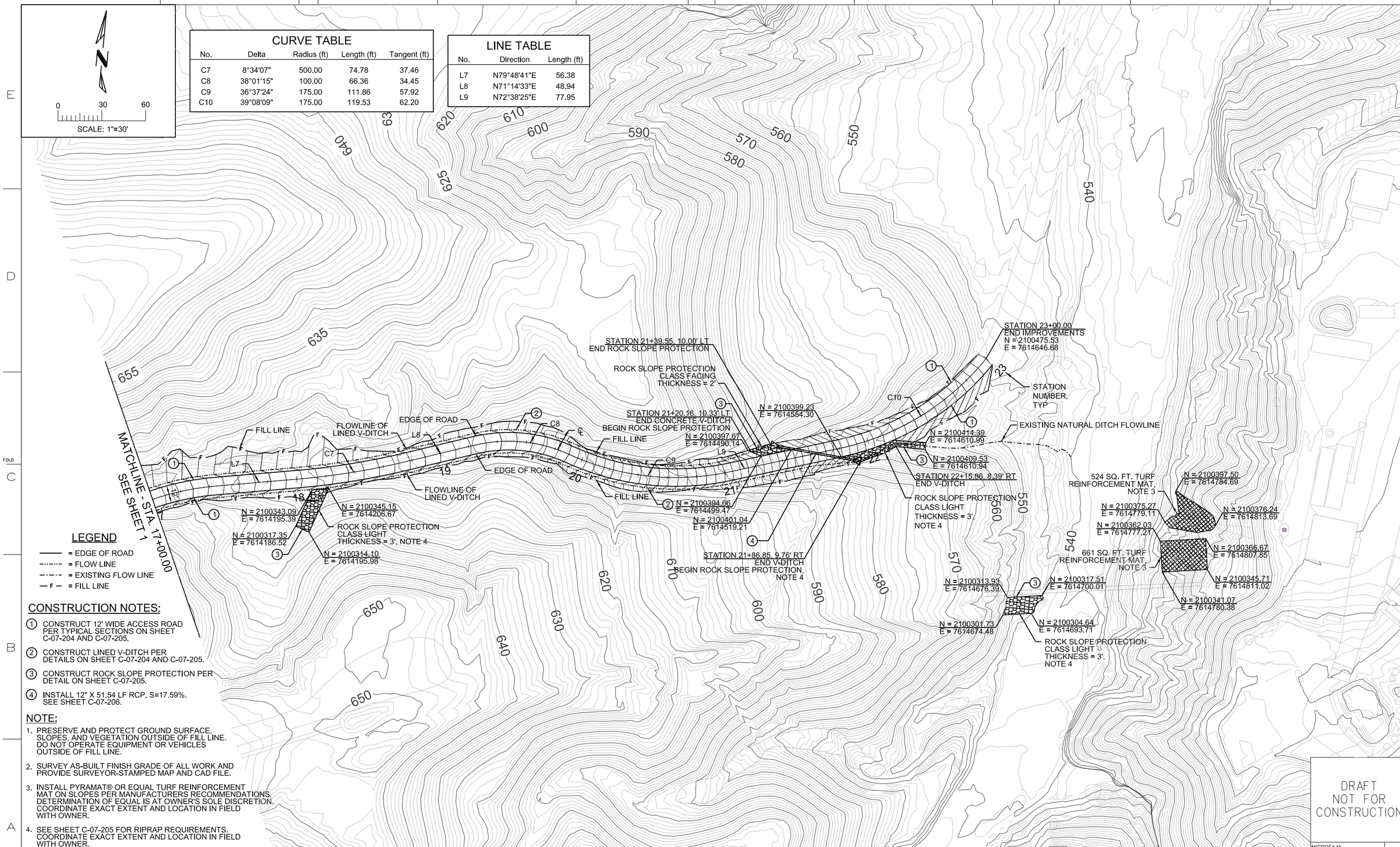

CURVE TABLE

No.	Delta	Radius (ft)	Length (ft)	Tangent (ft)
C7	8°34'07"	500.00	74.78	37.46
C8	38°01'15"	100.00	66.36	34.45
C9	36°37'24"	175.00	111.86	57.92
C10	39°08'09"	175.00	119.53	62.20

LINE TABLE

No.	Direction	Length (ft)
L7	N79°48'41"E	56.38
L8	N71°14'33"E	48.94
L9	N72°38'25"E	77.95

LEGEND

- = EDGE OF ROAD
- = FLOW LINE
- = EXISTING FLOW LINE
- = FILL LINE

CONSTRUCTION NOTES:

1. CONSTRUCT 12' WIDE ACCESS ROAD PER TYPICAL SECTIONS ON SHEET C-07-204 AND C-07-205.
2. CONSTRUCT LINED V-DITCH PER DETAILS ON SHEET C-07-204 AND C-07-205.
3. CONSTRUCT ROCK SLOPE PROTECTION PER DETAIL ON SHEET C-07-205.
4. INSTALL 12" X 51.54 LF RCP, S=17.59%. SEE SHEET C-07-206.

NOTE:

1. PRESERVE AND PROTECT GROUND SURFACE, SLOPES, AND VEGETATION OUTSIDE OF FILL LINE. DO NOT OPERATE EQUIPMENT OR VEHICLES OUTSIDE OF FILL LINE.
2. SURVEY AS-BUILT FINISH GRADE OF ALL WORK AND PROVIDE SURVEYOR-STAMPED MAP AND CAD FILE.
3. INSTALL PYRAMAT® OR EQUAL TURF REINFORCEMENT MAT ON SLOPES PER MANUFACTURERS RECOMMENDATIONS. DETERMINATION OF EQUAL IS AT OWNER'S SOLE DISCRETION. COORDINATE EXACT EXTENT AND LOCATION IN FIELD WITH OWNER.
4. SEE SHEET C-07-205 FOR RIPRAP REQUIREMENTS. COORDINATE EXACT EXTENT AND LOCATION IN FIELD WITH OWNER.

DRAFT
NOT FOR
CONSTRUCTION

CH2MHILL®

NO.	DATE	DESCRIPTION	GM/SPEC	DWN	CHKD	SUPV	APVD BY
0	09/08/14	PRE-FINAL DESIGN (90%)		SB	MS	CH	NB

REVISIONS

APPROVED BY		
	SO	
	SUPV	CH
	DSGN	SB
	DWN	SB
	CHKD	MS
	OK	
	DATE	6/30/14
	SCALES	1' = 30'

TOPOCK GROUNDWATER REMEDIATION PROJECT
PIPELINE
ROADWAY DRAINAGE
IMPROVEMENTS
GAS TRANSMISSION & DISTRIBUTION
PACIFIC GAS AND ELECTRIC COMPANY
SAN FRANCISCO, CALIFORNIA

MICROFILM	
BILL OF MATL	
DWG LIST	
SUPSDS	
SUPSD BY	
SHEET NO. 2 OF 6	SHEETS
C-07-202	REV 1

FILENAME: PG&E_Border.dgn
PLOT DATE: $PLOTDATE PLOT TIME: $PLOTTIME
FILENAME: ____DGN __-__-04 ____
CH-C-07-202.dgn Model 8/26/2014 3:38:44 PM
N1808

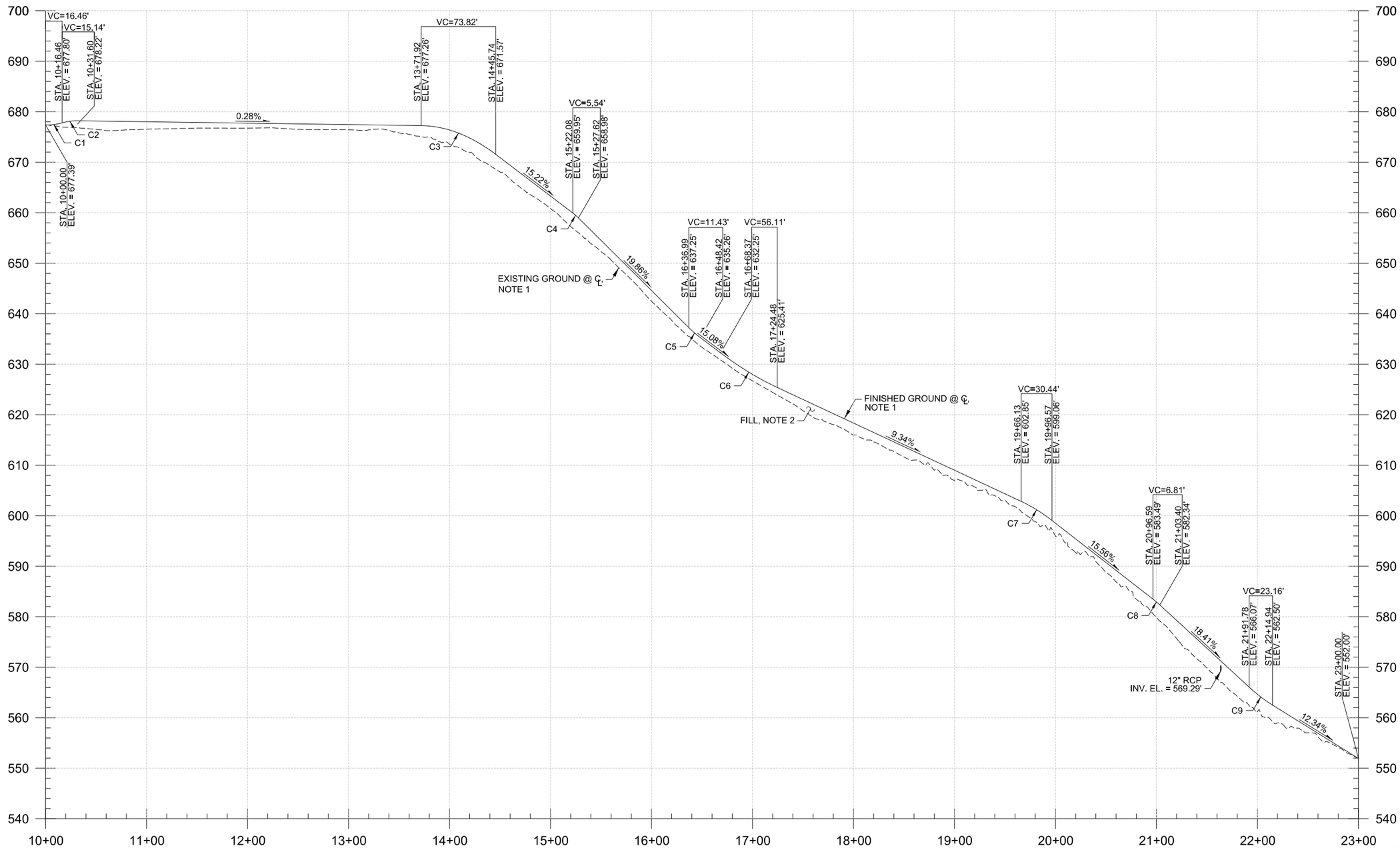

NOTE:

1. REFER TO DWGS C-07-201 AND C-07-202 FOR PLAN VIEW.
2. REFER TO DWGS C-07-204 AND C-07-205 FOR SECTION VIEW

SCALE

HORIZONTAL: 1" = 50'
VERTICAL: 1" = 5'

DRAFT
NOT FOR
CONSTRUCTION

CH2MHILL®

NO.	DATE	DESCRIPTION	GM/SPEC	DWN	CHKD	SUPV	APVD BY
0	09/08/14	PRE-FINAL DESIGN (90%)		SB	MS	CH	NB

REVISIONS

APPROVED BY
SO
SUPV CH
DSGN SB
DWN SB
CHKD MS
OK
DATE 6/30/14
SCALES HOR: 1" = 100' VERT: 1" = 10'

TOPOCK GROUNDWATER REMEDIATION PROJECT
PIPELINE
PROFILE

GAS TRANSMISSION & DISTRIBUTION
PACIFIC GAS AND ELECTRIC COMPANY
SAN FRANCISCO, CALIFORNIA

MICROFILM
BILL OF MATL
DWG LIST
SUPSDS
SUPSD BY
SHEET NO. 3 OF 6 SHEETS
C-07-203
REV 1

PLOT DATE: 2014/08/26 PLOT TIME: 3:06:38 PM
FILENAME: PG&E_Border.dgn
FILENAME: _____.DGN __-__-04 ____
N1808

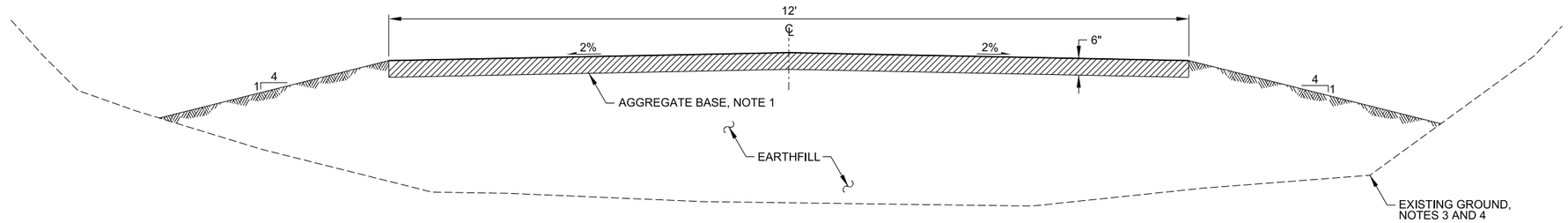

10+00.00 TO 13+75.00 (LOOKING EAST AND DOWNHILL)

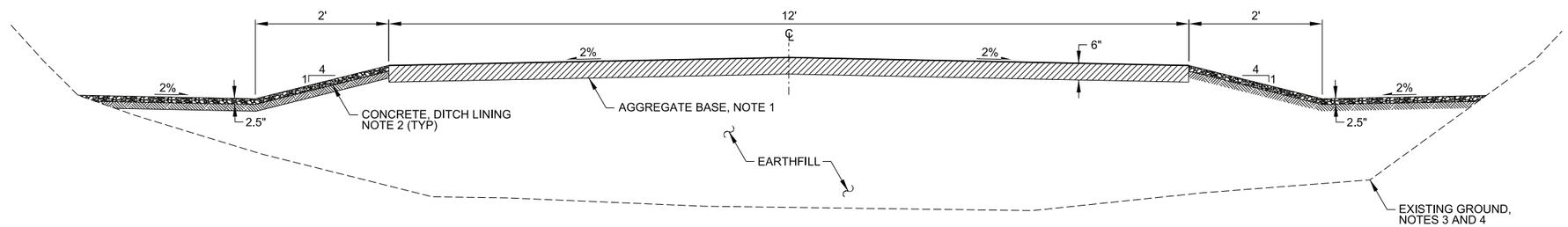

13+75.00 TO 21+34.63 (LOOKING EAST AND DOWNHILL)

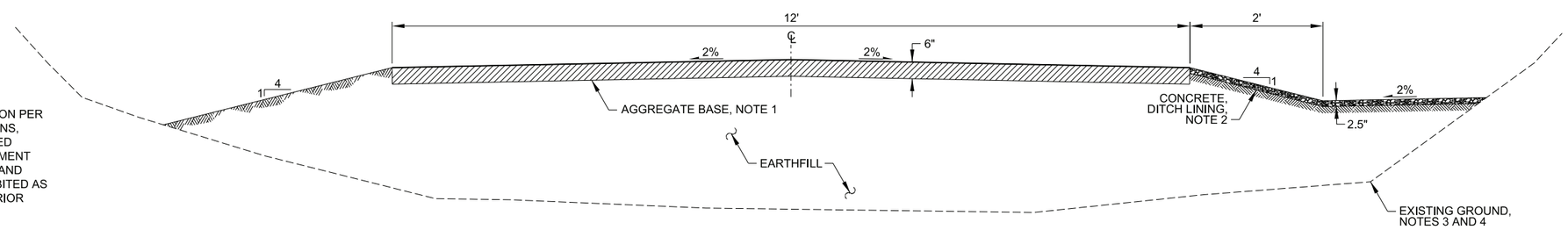

21+34.63 TO 21+91.38 (LOOKING EAST AND DOWNHILL)

NOTES:

1. CLASS 2. MATERIAL AND INSTALLATION PER CALTRANS STANDARD SPECIFICATIONS, SECTION 26, EXCEPT THAT RECLAIMED ASPHALT CONCRETE, PORTLAND CEMENT CONCRETE, LEAN CONCRETE BASE, AND CEMENT TREATED BASE ARE PROHIBITED AS AGGREGATES WITHOUT OWNER'S PRIOR APPROVAL.
2. TAN-COLORED REINFORCED CONCRETE DITCH LINING. MATERIAL AND INSTALLATION PER CALTRANS STANDARD SPECIFICATIONS, SECTION 72-5.
3. PRESERVE AND PROTECT GROUND SURFACE, SLOPES, AND VEGETATION OUTSIDE OF FILL LINE. DO NOT OPERATE EQUIPMENT OR VEHICLES OUTSIDE OF FILL LINE.
4. PREPARE SUBGRADE UNDER FILL.

SCALE

HORIZONTAL: 1" = 1'
VERTICAL: NTS

DRAFT
NOT FOR
CONSTRUCTION

CH2MHILL®

NO.	DATE	DESCRIPTION	GM/SPEC	DWN	CHKD	SUPV	APVD BY
0	09/08/14	PRE-FINAL DESIGN (90%)		SB	MS	CH	NB

REVISIONS

APPROVED BY
SO
SUPV CH
DSGN SB
DWN SB
CHKD MS
OK
DATE 6/30/14
SCALES HOR: 1"= 1' VERT: 1"= 2'

TOPOCK GROUNDWATER REMEDIATION PROJECT
PIPELINE
TYPICAL SECTIONS

GAS TRANSMISSION & DISTRIBUTION
PACIFIC GAS AND ELECTRIC COMPANY
SAN FRANCISCO, CALIFORNIA

MICROFILM
BILL OF MATL
DWG LIST
SUPSDS
SUPSD BY
SHEET NO. 4 OF 6 SHEETS
C-07-204 REV 1

FILENAME: PG&E_Border.dgn
PLOT DATE: 2014\08\26 PLOT TIME: 3:08:46 PM
FILENAME: _____.DGN __-__-04 ____
N1808

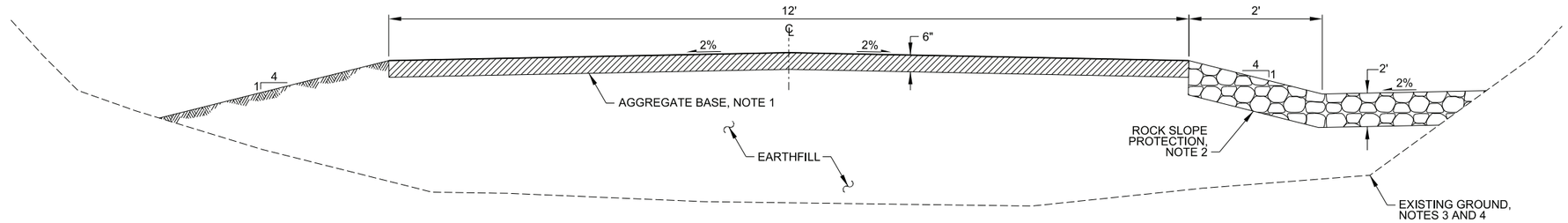

21+91.38 TO 22+15.86 (LOOKING EAST AND DOWNHILL)

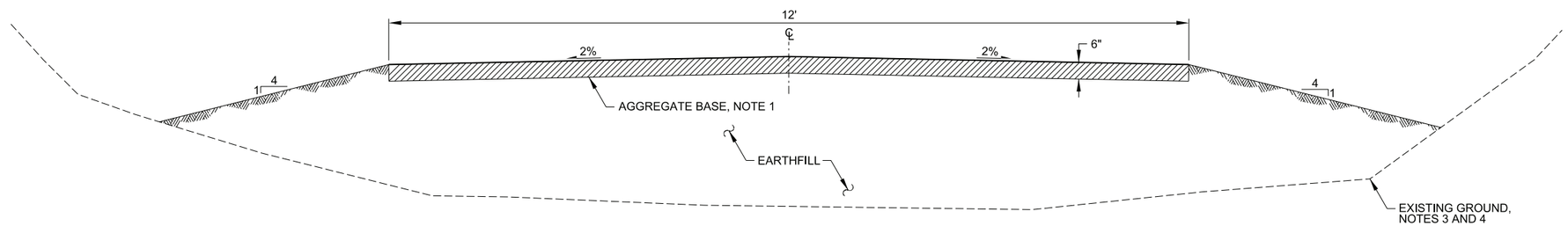

22+15.86 TO 23+00.00 (LOOKING EAST AND DOWNHILL)

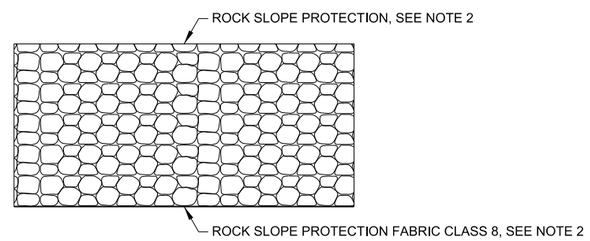

ROCK SLOPE PROTECTION DETAIL
NTS

NOTES:

1. CLASS 2. MATERIAL AND INSTALLATION PER CALTRANS STANDARD SPECIFICATIONS, SECTION 26, EXCEPT THAT RECLAIMED ASPHALT CONCRETE, PORTLAND CEMENT CONCRETE, LEAN CONCRETE BASE, AND CEMENT TREATED BASE ARE PROHIBITED AS AGGREGATES WITHOUT OWNER'S PRIOR APPROVAL.
2. MATERIAL AND METHOD B PLACEMENT PER CALTRANS STANDARD SPECIFICATIONS, SECTION 72-2. SEE PLAN SHEETS FOR CLASS AND THICKNESS.
3. PRESERVE AND PROTECT GROUND SURFACE, SLOPES, AND VEGETATION OUTSIDE OF FILL LINE. DO NOT OPERATE EQUIPMENT OR VEHICLES OUTSIDE OF FILL LINE.
4. PREPARE SUBGRADE UNDER FILL.

SCALE
HORIZONTAL: 1" = 1'
VERTICAL: NTS

DRAFT
NOT FOR
CONSTRUCTION

CH2MHILL®

NO.	DATE	DESCRIPTION	GM/SPEC	DWN	CHKD	SUPV	APVD BY
0	09/08/14	PRE-FINAL DESIGN (90%)		SB	MS	CH	NB

REVISIONS

APPROVED BY	
SO	
SUPV	CH
DSGN	SB
DWN	SB
CHKD	MS
OK	
DATE	6/30/14
SCALES	HOR: 1"= 1' VERT: 1"= 2'

TOPOCK GROUNDWATER REMEDIATION PROJECT
PIPELINE
TYPICAL SECTIONS

GAS TRANSMISSION & DISTRIBUTION
PACIFIC GAS AND ELECTRIC COMPANY
SAN FRANCISCO, CALIFORNIA

MICROFILM
BILL OF MATL
DWG LIST
SUPSDS
SUPSD BY
SHEET NO. 5 OF 6 SHEETS
C-07-205 REV 1

PLOT DATE: 2014\08\26 PLOT TIME: 3:11:04 PM
FILENAME: PG&E_Border.dgn
FILENAME: _____.DGN __-__-04 ____
N1808

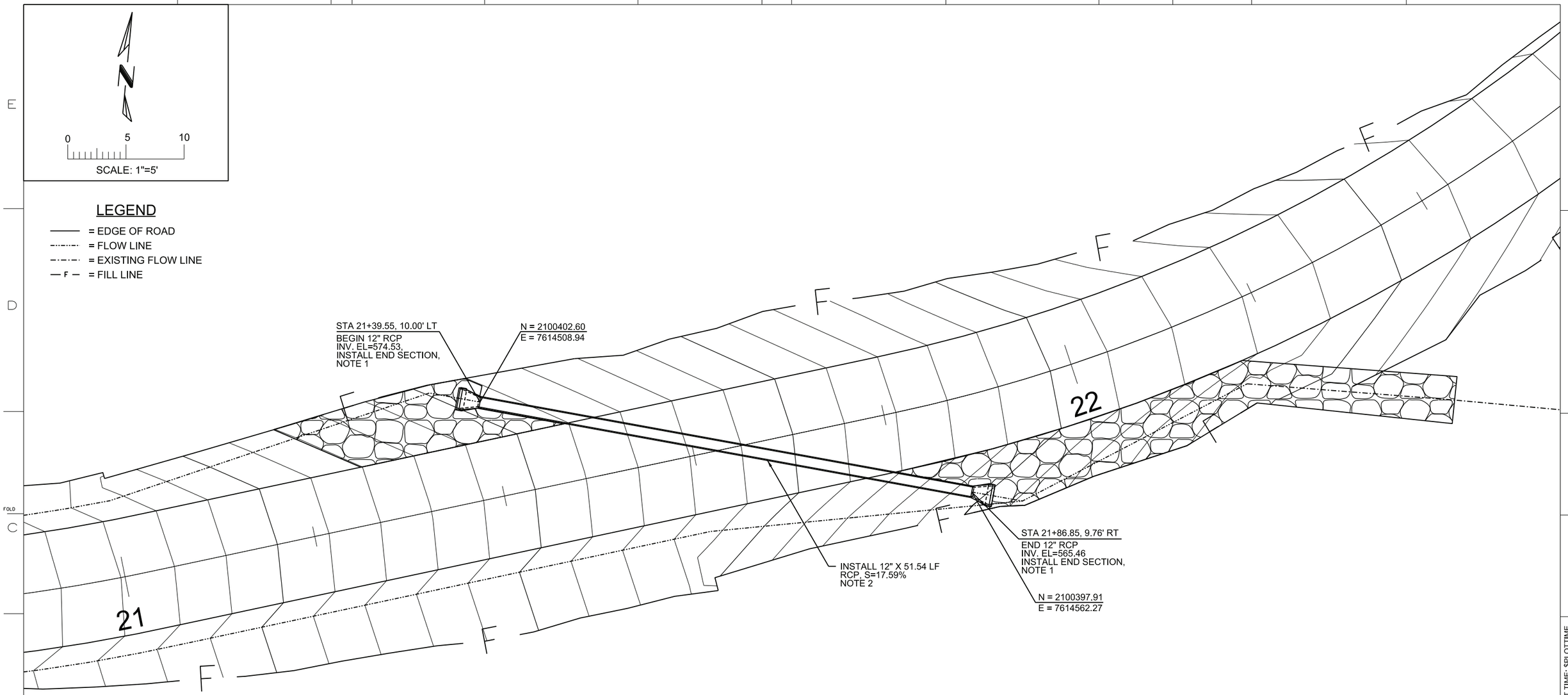

NOTE 1: PER 2010 CAL TRANS STD. PLAN D94B.
NOTE 2: PER 2010 CAL TRANS STD. PLAN D79, AND
2010 CAL TRANS STD. SPEC. SECTION 65.

DRAFT
NOT FOR
CONSTRUCTION

CH2MHILL®

NO.	DATE	DESCRIPTION	GM/SPEC	DWN	CHKD	SUPV	APVD BY
0	09/08/14	PRE-FINAL DESIGN (90%)		SB	MS	CH	NB

REVISIONS

APPROVED BY
SO
SUPV CH
DSGN SB
DWN SB
CHKD MS
OK
DATE 6/30/14
SCALES 1' = 5'

TOPOCK GROUNDWATER REMEDIATION PROJECT
PIPELINE
CULVERT PIPE CROSSING
DETAIL
GAS TRANSMISSION & DISTRIBUTION
PACIFIC GAS AND ELECTRIC COMPANY
SAN FRANCISCO, CALIFORNIA

MICROFILM
BILL OF MATL
DWG LIST
SUPSDS
SUPSD BY
SHEET NO. 6 OF 6 SHEETS
C-07-206 REV 1

FILENAME: PG&E_Border.dgn
PLOT DATE: $PLOTDATE PLOT TIME: $PLOTTIME

N1808

FILENAME: ____DGN __-__-04 ____

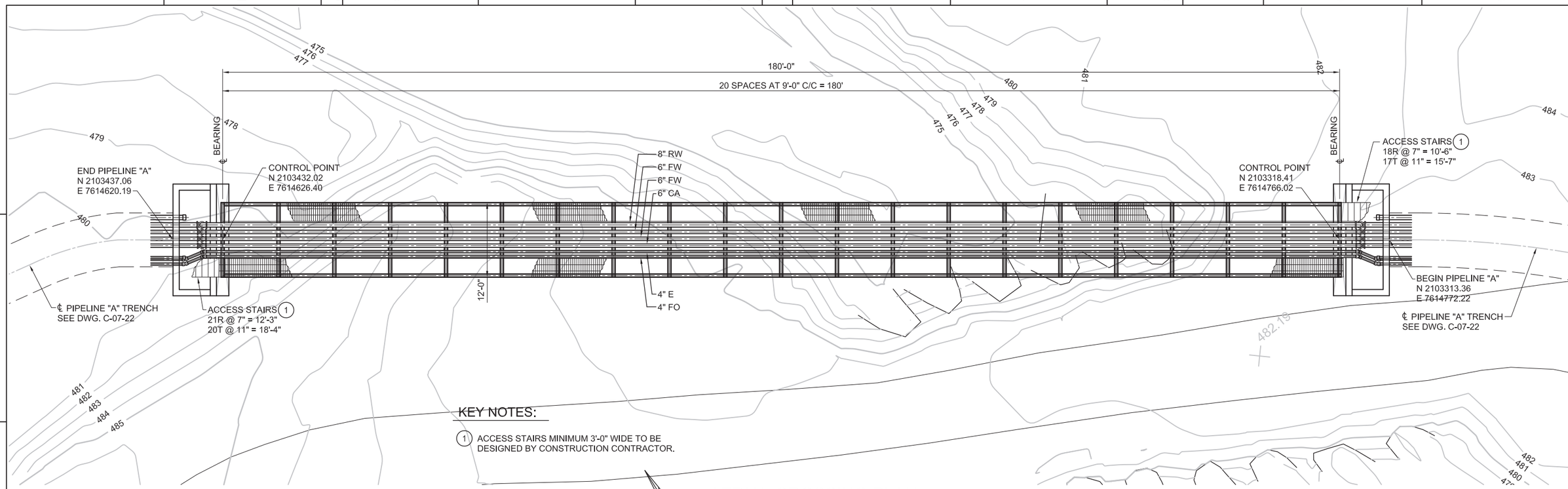

KEY NOTES:

(1) ACCESS STAIRS MINIMUM 3'-0" WIDE TO BE DESIGNED BY CONSTRUCTION CONTRACTOR.

AERIAL CROSSING PLAN

1/8" = 1'-0"

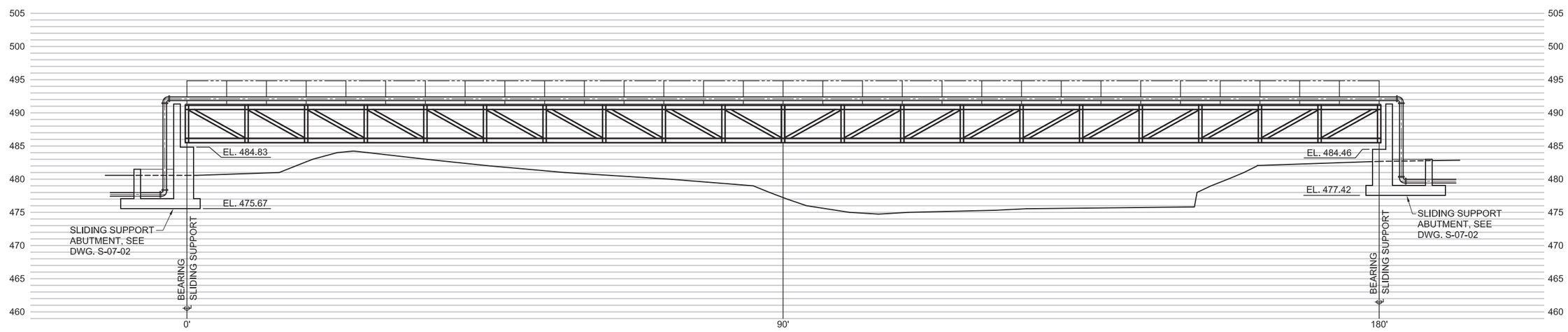

AERIAL CROSSING ELEVATION

1/8" = 1'-0"

0 8' 16' 24'

SCALE: 1/8"=1'

DRAFT
NOT FOR
CONSTRUCTION

E2 Consulting Engineers, Inc.
1900 Powell Street, Ste. 250
Emeryville, CA 94608
(510) 652-1164

CH2MHILL®

NO.	DATE	DESCRIPTION	GM/SPEC	DWN	CHKD	SUPV	APVD BY
1	9/8/14	PRE-FINAL (90%) DESIGN		WTH	KJ	VMB	VMB
0	4/5/13	INTERMEDIATE (60%) DESIGN		WTH	KJ	VMB	VMB

REVISIONS

APPROVED BY
SO
SUPV VMB
DSGN KDD
DWN WTH
CHKD KJ
OK VMB
DATE 9/8/14
SCALES

TOPOCK GROUNDWATER REMEDIATION PROJECT
AERIAL CROSSING
PIPELINE "A"

GAS TRANSMISSION & DISTRIBUTION
PACIFIC GAS AND ELECTRIC COMPANY
SAN FRANCISCO, CALIFORNIA

MICROFILM
BILL OF MATL
DWG LIST
SUPSDS
SUPSD BY
SHEET NO. of SHEETS
S-07-01
REV 1

PLOT TIME: $PLOTTIME
PLOT DATE: $PLOTDATE
FILENAME: E2-S-XXX-0701.dwg

N1808

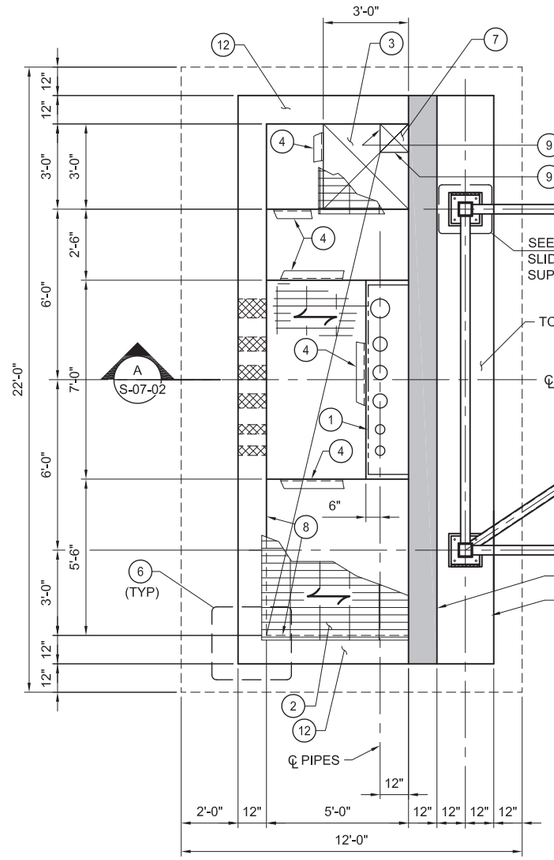

SLIDING SUPPORT
ABUTMENT

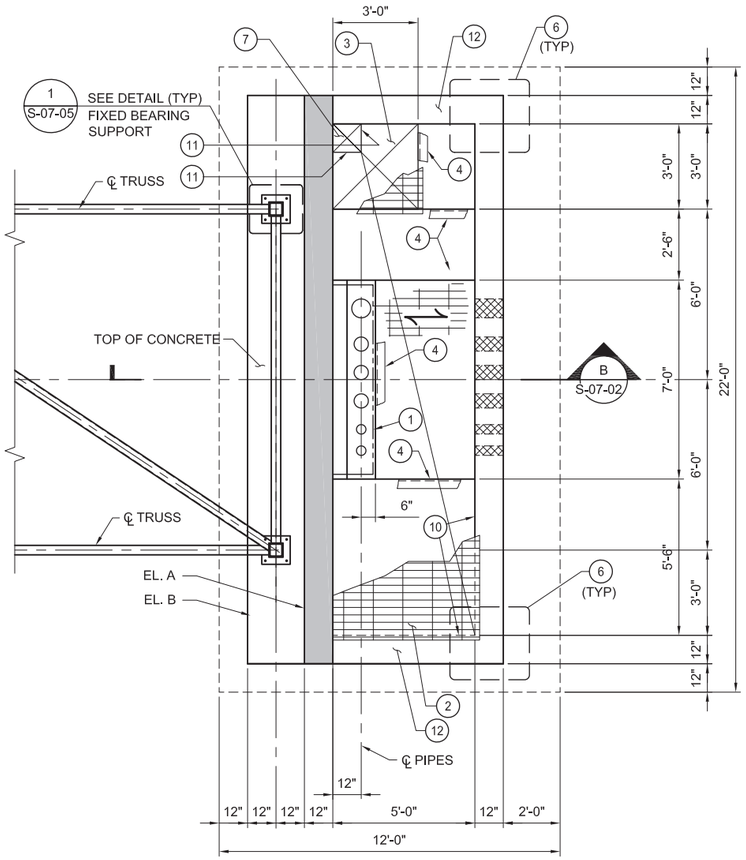

FIXED SUPPORT
ABUTMENT

PLAN
3/8" = 1'-0"

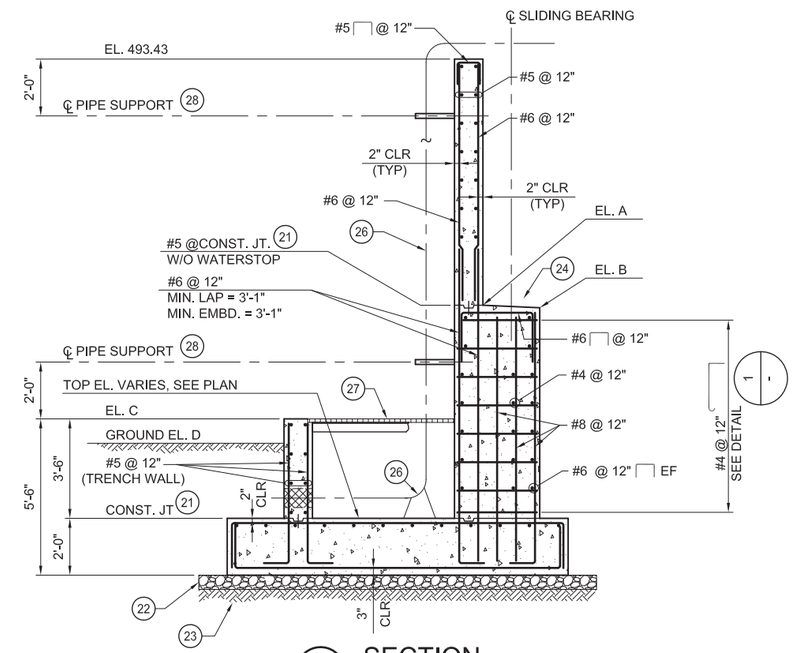

A SECTION
1/2" = 1'-0"

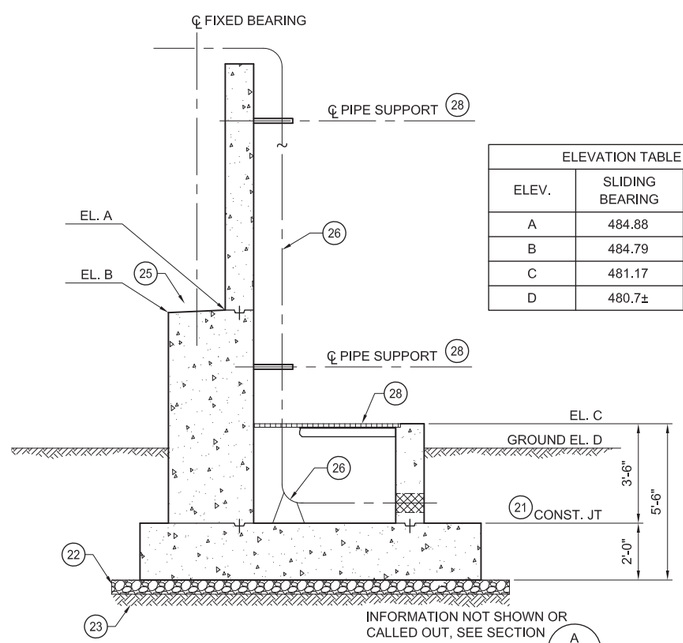

B SECTION
1/2" = 1'-0"

ELEVATION TABLE		
ELEV.	SLIDING BEARING	FIXED BEARING
A	484.88	485.00
B	484.79	484.92
C	481.17	482.92
D	480.7±	482.4±

KEY NOTES:

1. FOR PIPE SUPPORT, SEE DETAIL 3 ON DWG. S-07-07.
2. 1 1/2" GALVANIZED STEEL GRATING. SEE DETAIL 1 ON DWG. S-00-04.
3. PROVIDE 3' x 3' REMOVABLE GRATING SECTION OVER SUMP.
4. GRATING SUPPORT NUMBERS C9 x 13.4. FOR SUPPORT SEE DETAIL 2 ON DWG S-00-04.
5. PIPE PENETRATION. SEE DETAIL 4 ON DWG. S-00-02.
6. CORNER REINFORCING. SEE DETAIL 6 ON DWG. S-00-02.
7. 12" x 12" x 4" DEEP SUMP.
8. EL. 477.67
9. EL. 477.50
10. EL. 479.42
11. EL. 479.25
12. REINFORCING TO BE SAME AS SHOWN IN SECTION A ON DWG. S-07-02 FOR 12" TRENCH WALL.

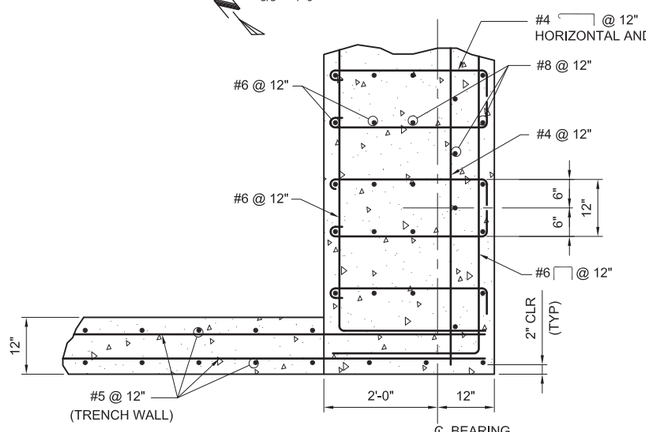

1 DETAIL
1/2" = 1'-0"

KEY NOTES:

21. CONSTRUCTION JOINT W/ WATERSTOP. SEE DETAIL 1 ON DWG S-00-02.
22. 6" THICK CRUSHED DRAIN ROCK EXTEND MINIMUM 2'-0" BEYOND EDGE OF FOUNDATION.
23. STRUCTURAL FILL, COMPACTED TO 95%.
24. SLIDING BEARING, SEE DETAIL 1 ON DWG. S-07-05.
25. FIXED BEARING, SEE DETAIL 2 ON DWG. S-07-05.
26. ℄ PIPES. PROVIDE 90° ELBOW SUPPORT @ BASE.
27. GRATING AND SUPPORT MEMBERS. SEE PLAN.
28. FOR PIPE SUPPORT, SEE DETAIL 3 ON DWG S-07-07.

DRAFT
NOT FOR
CONSTRUCTION

E2 Consulting Engineers, Inc.
1900 Powell Street, Ste. 250
Emeryville, CA 94608
(510) 652-1164

CH2MHILL®

NO.	DATE	DESCRIPTION	GM/SPEC	DWN	CHKD	SUPV	APVD BY
0	09/08/14	PRE-FINAL (90%) DESIGN		MD	KJ	VMB	VMB

REVISIONS

APPROVED BY		
	SO	
	SUPV	VMB
	DSGN	KJ
	DWN	MD
	CHKD	KJ/KDD
	OK	VMB
	DATE	09/08/14
	SCALES	

TOPOCK GROUNDWATER REMEDIATION PROJECT
AERIAL CROSSING PIPELINE "A" ABUTMENT - PLAN, SECTIONS AND DETAILS
GAS TRANSMISSION & DISTRIBUTION
PACIFIC GAS AND ELECTRIC COMPANY
SAN FRANCISCO, CALIFORNIA

MICROFILM	
BILL OF MATL	
DWG LIST	
SUPSDS	
SUPSD BY	
SHEET NO. of SHEETS	
S-07-02	REV 0

PLOT DATE: $PLOTDATE PLOT TIME: $PLOTTIME
FILENAME: E2-S-XXX-0202AD.dwg

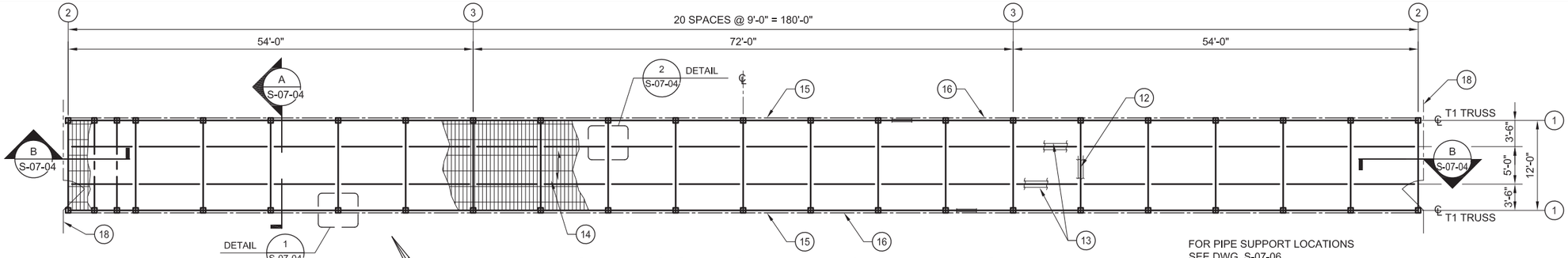

PIPE AND GRATING SUPPORT PLATFORM-FRAMING PLAN

1/8" = 1'-0"

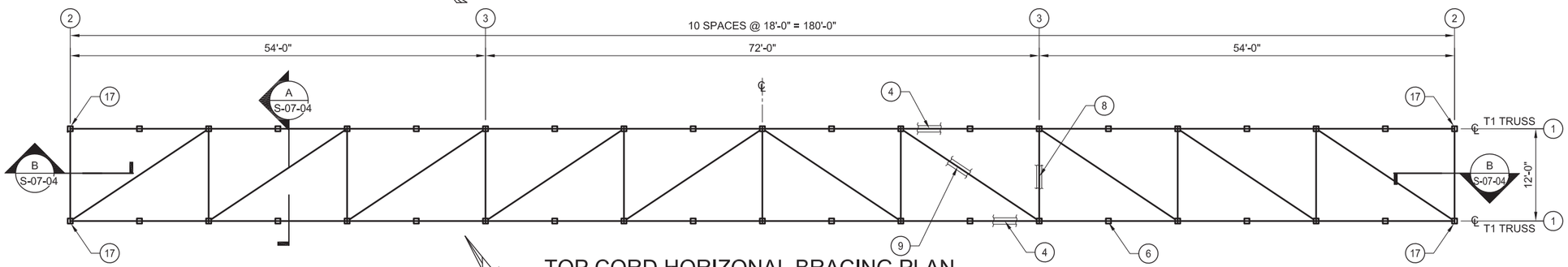

TOP CORD HORIZONAL BRACING PLAN

1/8" = 1'-0"

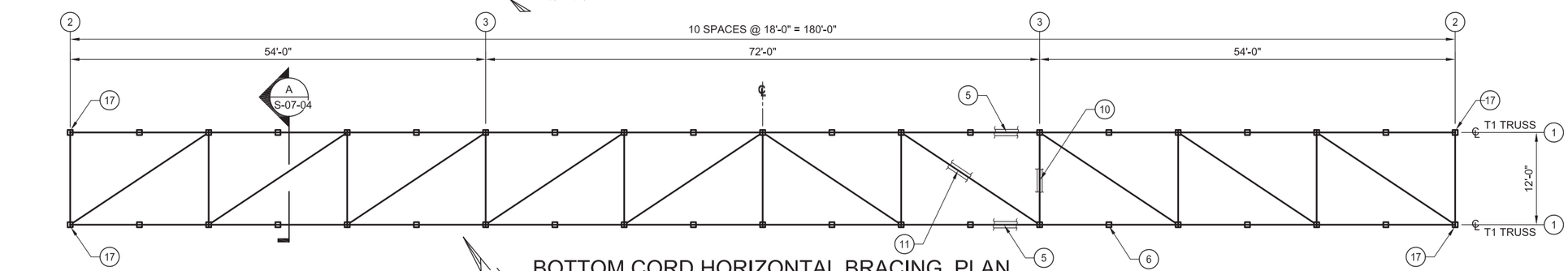

BOTTOM CORD HORIZONTAL BRACING PLAN

1/8" = 1'-0"

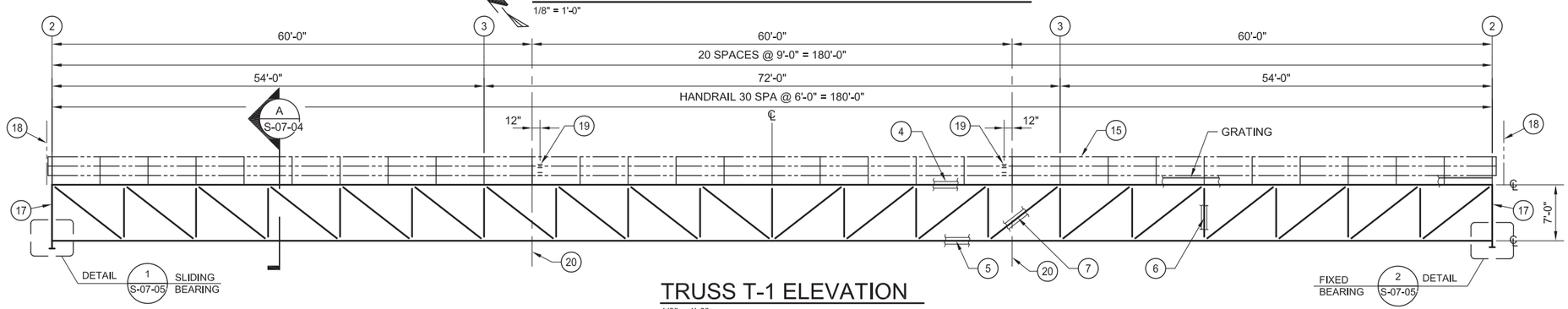

TRUSS T-1 ELEVATION

1/8" = 1'-0"

KEY NOTES:

1. ℄ T1 TRUSS
2. END VERTICAL BRACING - SEE SECTION A ON DWG S-07-04
3. INTERMEDIATE VERTICAL BRACING - SEE SECTION A ON DWG S-07-04
4. HSS 8X4X1/2 - TRUSS T-1 TOP CORD - SEE NOTE 1
5. HSS 8X4X3/8 - TRUSS T-1 BOTTOM CORD - SEE NOTE 1
6. HSS 4X4X3/16 - TRUSS T-1 VERTICAL POST
7. HSS 4X4X3/16 - TRUSS T-1 DIAGONAL
8. HSS 4X4X3/16 - TOP CHORD HORIZONTAL BRACING
9. HSS 4X4X3/16 - TOP CHORD HORIZONTAL DIAGONAL BRACING
10. HSS 4X4X3/16 - BOTTOM CHORD HORIZONTAL BRACING
11. HSS 4X4X3/16 - BOTTOM CHORD HORIZONTAL DIAGONAL BRACING
12. HSS 5X5X3/8 - TOP CORD PLATFORM BEAM
13. HSS 5X5X1/4 - TOP CORD PLATFORM BEAM
14. 1 1/2" GALV. GRATING - TOP CORD PLATFORM GRATING
15. GALVANIZED STEEL HANDRAIL - SEE DETAIL 3 ON DWG. S-07-04
16. C5X9 - GRATING SUPPORT BEAM
17. HSS 6X6X1/2 - END VERTICAL SUPPORTS
18. SECURITY FENCE W/ 4'-0" GATE. SEE DETAIL 1 ON DWG. S-07-08
19. HR EXPANSION JOINT (ALL THREE HORIZONTAL RAILS) SEE DETAIL 2 ON DWG. S-00-03.
20. TRUSS FIELD SPLICE LOCATIONS. SEE DETAIL 4 ON DWG. S-07-04

NOTES:

1. THE 180 FT TRUSS TOP CHORD AND BOTTOM CHORD TO BE SHOP CAMBERED SEVEN INCHES UPWARD AT CENTER OF TRUSS.
2. ALL STEEL TO BE HOT DEEP GALVANIZED AND PAINTED PER PROJECT SPECIFICATIONS.
3. FOR GENERAL STRUCTURAL NOTES, SEE DWG. S-00-01.

0 8' 16' 24'
SCALE: 1/8"=1'

DRAFT NOT FOR CONSTRUCTION

E2 Consulting Engineers, Inc.
1900 Powell Street, Ste. 250
Emeryville, CA 94608
(510) 652-1164

CH2MHILL®

NO.	DATE	DESCRIPTION	GM/SPEC	DWN	CHKD	SUPV	APVD BY
0	09/08/14	PRE-FINAL (90%) DESIGN		MD	KJ	VMB	VMB

REVISIONS

APPROVED BY		
	SO	
	SUPV	VMB
	DSGN	KDD/KJ
	DWN	PH/MD
	CHKD	KJ/KDD
	OK	VMB
	DATE	9/8/14
	SCALES	

TOPOCK GROUNDWATER REMEDIATION PROJECT
AERIAL CROSSING
PIPELINE "A"
PLANS AND ELEVATION
GAS TRANSMISSION & DISTRIBUTION
PACIFIC GAS AND ELECTRIC COMPANY
SAN FRANCISCO, CALIFORNIA

MICROFILM
BILL OF MATL
DWG LIST
SUPSDS
SUPSD BY
SHEET NO. of SHEETS
S-07-03
REV 0

PLOT DATE: $PLOTDATE PLOT TIME: $PLOTTIME
FILENAME: E2-S-XXX-07/03.dwg

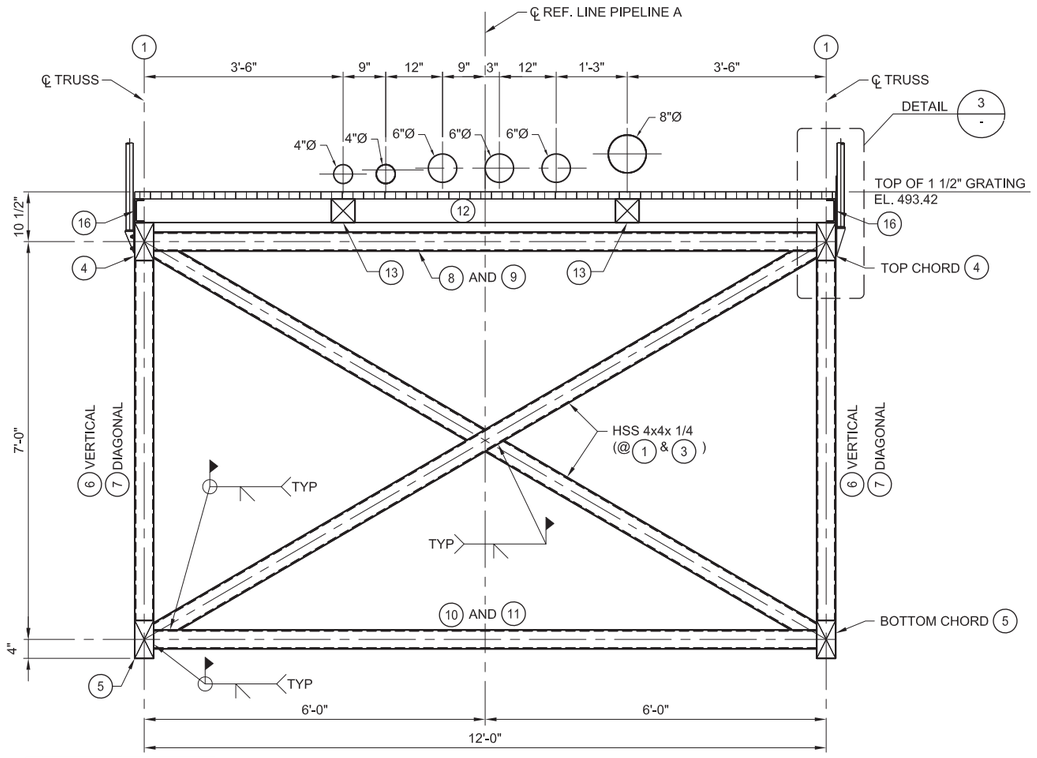

FOR KEY NOTES, SEE SHEET S-07-03

A SECTION
3/4" = 1'-0"
S-07-03, S-07-06

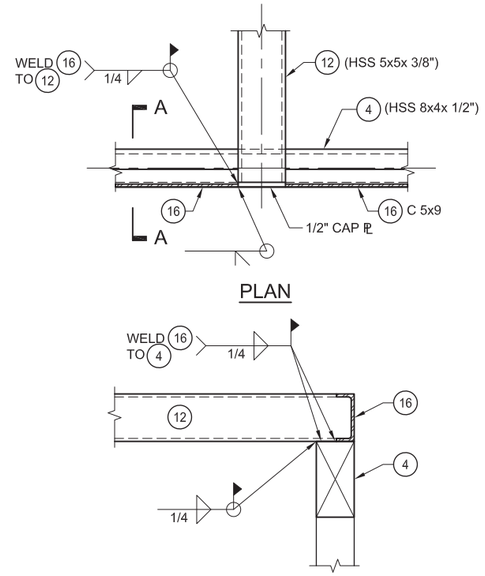

PLAN

A-A SECTION

1 DETAIL
1 1/2" = 1'-0"
S-07-03

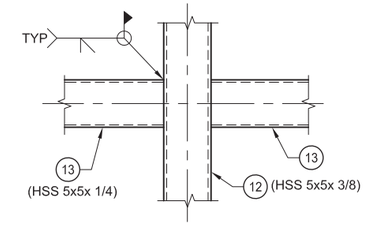

2 DETAIL
1 1/2" = 1'-0"
S-07-03

FOR KEY NOTES, SEE SHEET S-07-03

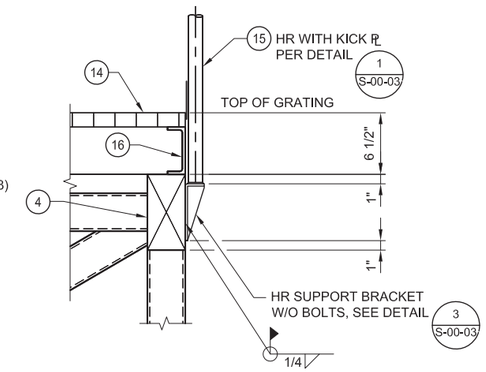

3 HANDRAIL DETAIL
1 1/2" = 1'-0"
S-07-03

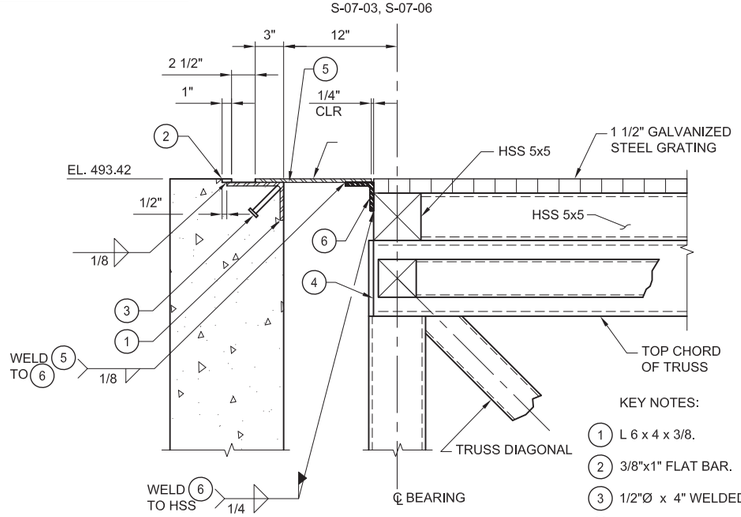

B SECTION
1 1/2" = 1'-0"
S-07-03, S-07-08

KEY NOTES:

1. L 6 x 4 x 3/8.
2. 3/8"x1" FLAT BAR.
3. 1/2"Ø x 4" WELDED STUDS @ 12" C/C.
4. 1/2" CAP PLATE WELDED TO HSS MEMBERS.
5. 3/8" x 12 1/2" GALVANIZED STEEL CHECKERED PLATE.
6. L 3 x 3x 3/8"

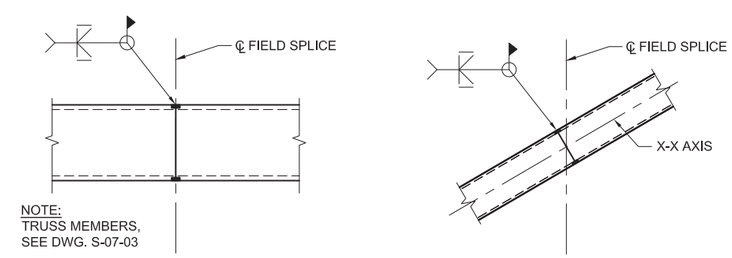

NOTE:
TRUSS MEMBERS, SEE DWG. S-07-03

TOP & BOTTOM CHORD MEMBERS

DIAGONAL MEMBERS

4 DETAIL
1 1/2" = 1'-0"
S-07-03

1' 0' 1' 2'
SCALE: 3/4" = 1'-0"

DRAFT NOT FOR CONSTRUCTION

E2 Consulting Engineers, Inc.
1900 Powell Street, Ste. 250
Emeryville, CA 94608
(510) 652-1164

CH2MHILL®

NO.	DATE	DESCRIPTION	GM/SPEC	DWN	CHKD	SUPV	APVD BY
0	09/08/14	PRE-FINAL (90%) DESIGN		MD	KJ	VMB	VMB

REVISIONS

APPROVED BY
ISO
SUPV VMB
DSGN VMB/KJ
DWN PH
CHKD PT
OK VMB
DATE 9/8/14
SCALES

TOPOCK GROUNDWATER REMEDIATION PROJECT
AERIAL CROSSING
PIPELINE "A"
SECTIONS AND DETAILS
GAS TRANSMISSION & DISTRIBUTION
PACIFIC GAS AND ELECTRIC COMPANY
SAN FRANCISCO, CALIFORNIA

MICROFILM
BILL OF MATL
DWG LIST
SUPSDS
SUPSD BY
SHEET NO. of SHEETS
S-07-04
REV 0

PLOT DATE: $PLOTDATE PLOT TIME: $PLOTTIME
FILENAME: E2-S-XXX-0703.dwg

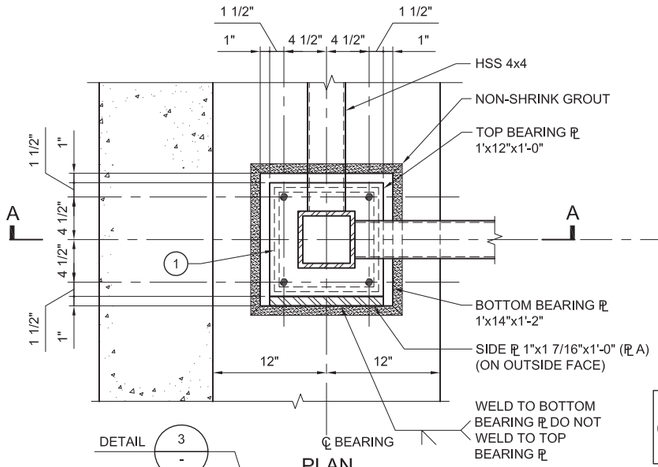

PLAN

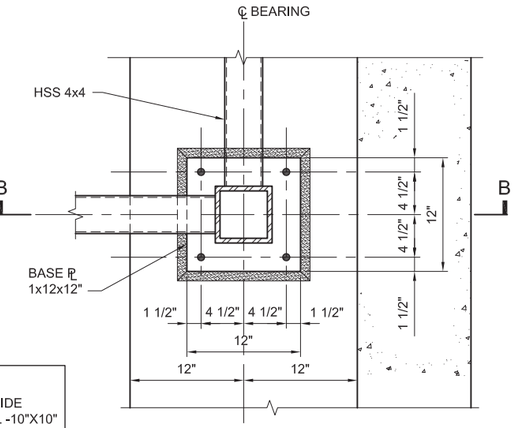

PLAN

NOTES:
1. PROVIDE FLUROGOLD SLIDE BEARING FC-1010-CS 1/4L -10"X10"

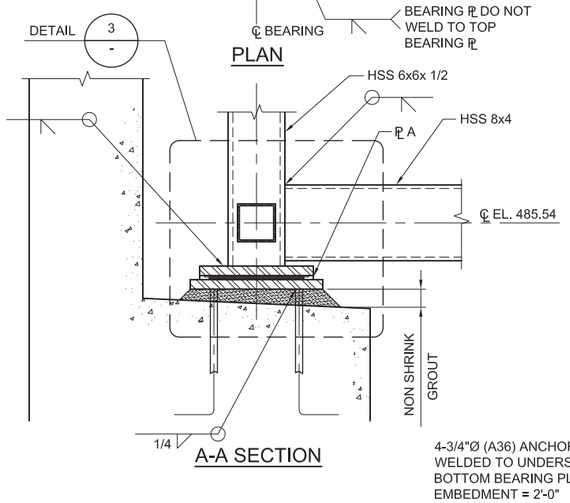

A-A SECTION

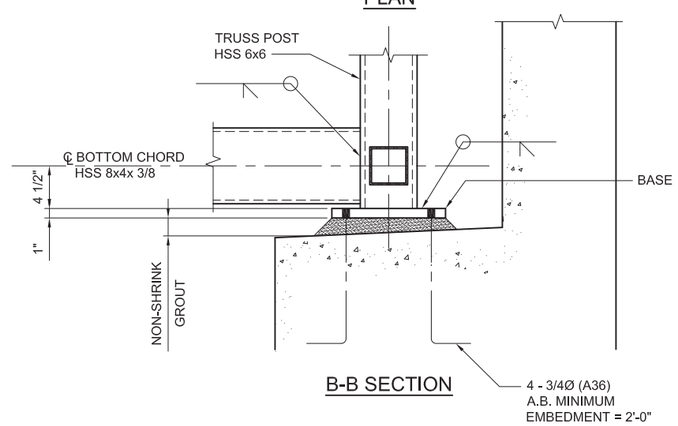

B-B SECTION

1 DETAIL -SLIDING BEARING

1 1/2" = 1'-0"

S-07-03

2 DETAIL -FIXED BEARING

1 1/2" = 1'-0"

S-07-03

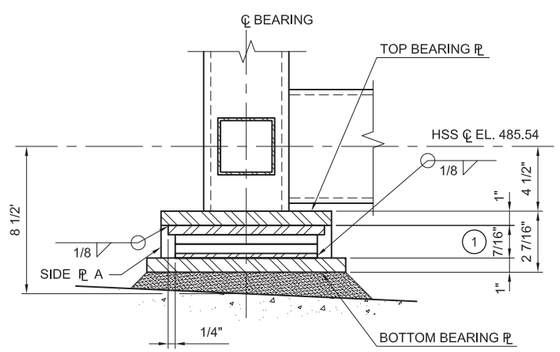

3 DETAIL

NO SCALE

DRAFT
NOT FOR
CONSTRUCTION

E2 Consulting Engineers, Inc.
1900 Powell Street, Ste. 250
Emeryville, CA 94608
(510) 652-1164

CH2MHILL®

NO.	DATE	DESCRIPTION	GM/SPEC	DWN	CHKD	SUPV	APVD BY
0	09/08/14	PRE-FINAL (90%) DESIGN		MD	VMB	VMB	VMB

REVISIONS

APPROVED BY
SO
SUPV VMB
DSGN KJD
DWN WTH
CHKD VMB
OK VMB
DATE 09/08/14
SCALES

TOPOCK GROUNDWATER REMEDIATION PROJECT
AERIAL CROSSING
PIPELINE "A"
SECTIONS AND DETAILS
GAS TRANSMISSION & DISTRIBUTION
PACIFIC GAS AND ELECTRIC COMPANY
SAN FRANCISCO, CALIFORNIA

MICROFILM
BILL OF MATL
DWG LIST
SUPSDS
SUPSD BY
SHEET NO. of SHEETS
S-07-05
REV 0

PLOT DATE: $PLOTDATE PLOT TIME: $PLOTTIME
FILENAME: E2-S-XXX-0705.dwg

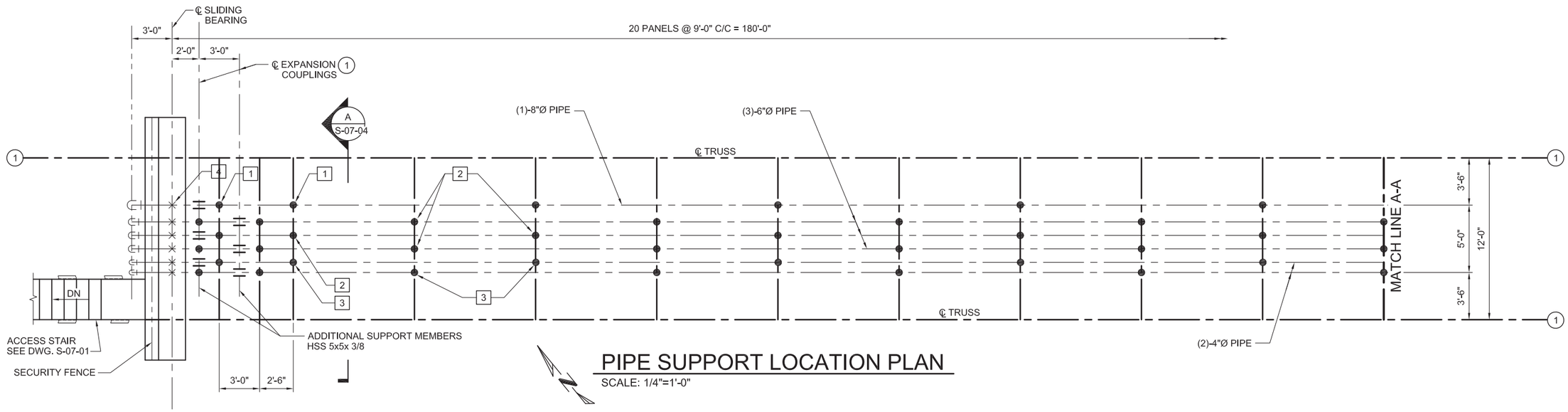

PIPE SUPPORT LOCATION PLAN

SCALE: 1/4"=1'-0"

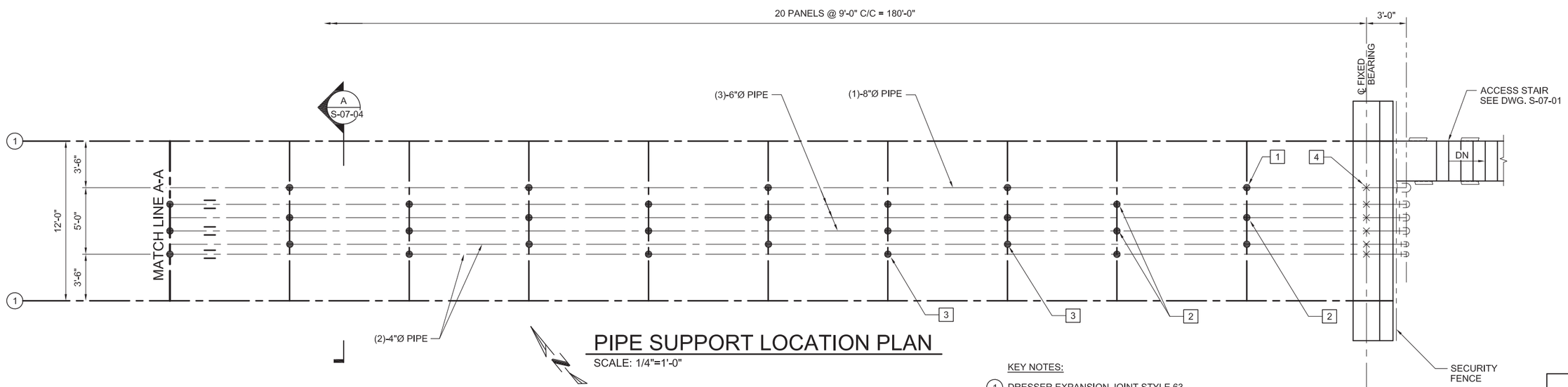

PIPE SUPPORT LOCATION PLAN

SCALE: 1/4"=1'-0"

KEY NOTES:

1. DRESSER EXPANSION JOINT STYLE 63, TYPE I. MAXIMUM EXPANSION = 4"
2. ● 1 2 3 INDICATES ROLLER STAND PIPE SUPPORTS. SEE DETAIL 1 ON DWG. S-07-07.
3. × 4 INDICATES FIXED PIPE SUPPORTS, SEE DETAIL 2 ON DWG. S-07-07.

DRAFT
NOT FOR
CONSTRUCTION

E2 Consulting Engineers, Inc.
1900 Powell Street, Ste. 250
Emeryville, CA 94608
(510) 652-1164

CH2MHILL®

NO.	DATE	DESCRIPTION	GM/SPEC	DWN	CHKD	SUPV	APVD BY
0	09/08/14	PRE-FINAL (90%) DESIGN		MD	KJ	VMB	VMB

REVISIONS

APPROVED BY	
ISO	
SUPV	VMB
DSGN	KJ
DWN	MD
CHKD	VMB
OK	VMB
DATE	9/8/14
SCALES	

TOPOCK GROUNDWATER REMEDIATION PROJECT
AERIAL CROSSING
PIPELINE "A"
PIPE SUPPORT AND LOCATIONS
GAS TRANSMISSION & DISTRIBUTION
PACIFIC GAS AND ELECTRIC COMPANY
SAN FRANCISCO, CALIFORNIA

MICROFILM	
BILL OF MATL	
DWG LIST	
SUPSDS	
SUPSD BY	
SHEET NO. of SHEETS	
S-07-06	REV 0

FILENAME: E2-S-XXX-0705.dwg
PLOT DATE: $PLOTDATE PLOT TIME: $PLOTTIME
N180B

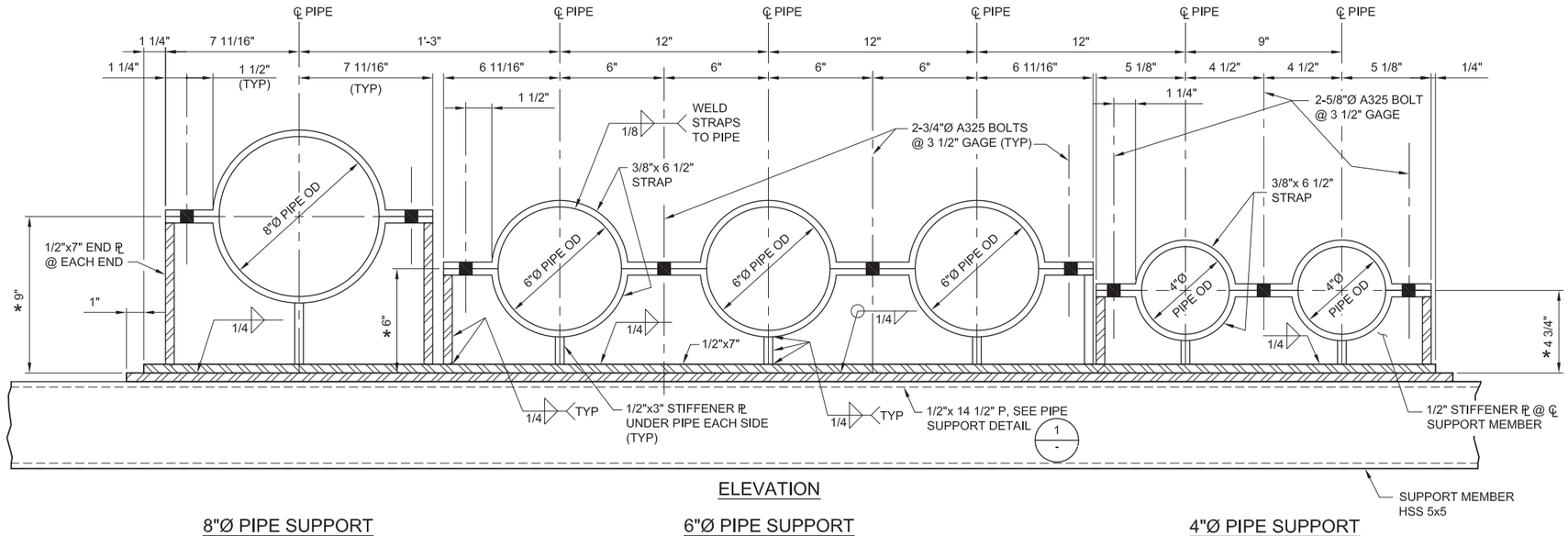

ELEVATION

8"Ø PIPE SUPPORT | 6"Ø PIPE SUPPORT | 4"Ø PIPE SUPPORT

1 PIPE SUPPORT - TYPE 4

3" = 1'-0"

S-07-06

NOTES:

* 1. DIMENSIONS MARKED WITH AN ASTERISK TO BE VERIFIED WITH APPROVED SUBMITTALS.

2. PIPE SUPPORTS TO BE GALVANIZED AND PAINTED PER SPECIFICATION SECTION 099000.

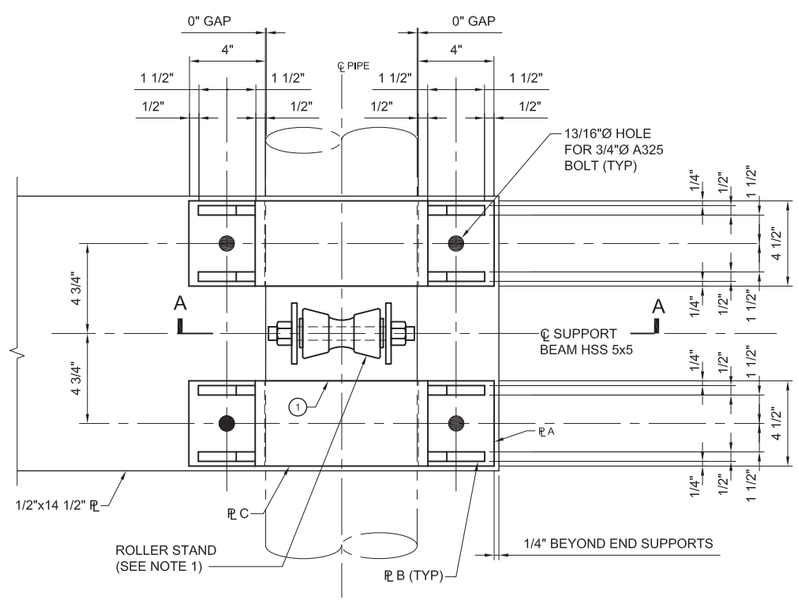

PLAN

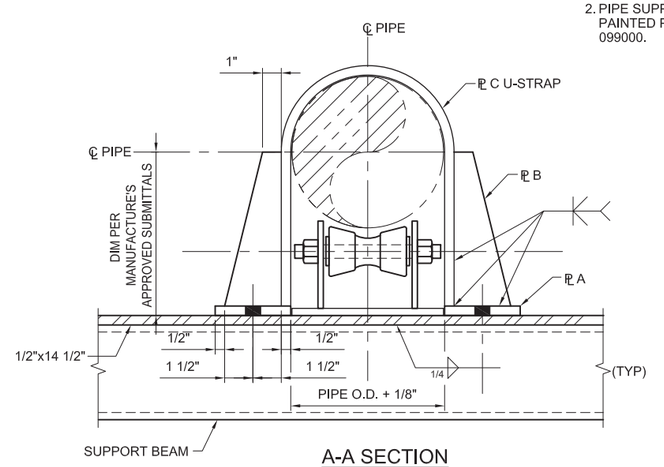

A-A SECTION

NOTES:

(a) BASE PLATE TO BE PROVIDED BY ROLLER STAND MANUFACTURER. MODIFY AS SHOWN. (STEEL A36)

(1) ROLLER STAND: FIGURE 230, AS MANUFACTURERED BY PIPING TECHNOLOGY & PRODUCTS, INC.

(2) DO NOT WELD U-STRAPS TO PIPES

PIPE SUPPORT SCHEDULE							
		ROLLER STAND		PIPE RESTRAINED BRACKET			
PIPE	TYPE	BASE ℙ	NOTE	PLATE A (BASE ℙ)	PLATE B (STIFFENER)	PLATE C (U-STRAP)	NOTE
8" Ø	1	3/8 x 5 x 8 1/2"	(a), 1	1/2"	1/2"	1/2" x 4 1/2"	2
6" Ø	2	3/8 x 4 1/4 x10"	(a), 1	1/2"	1/2"	1/2" x 4 1/2"	2
4" Ø	3	3/8 x 4 1/4 x10"	(a), 1	3/8"	3/8"	3/8" x 4 1/2"	2

1 PIPE SUPPORT DETAIL

SCALE: NONE

S-07-06

DRAFT NOT FOR CONSTRUCTION

E2 Consulting Engineers, Inc.
1900 Powell Street, Ste. 250
Emeryville, CA 94608
(510) 652-1164

CH2MHILL®

NO.	DATE	DESCRIPTION	GM/SPEC	DWN	CHKD	SUPV	APVD BY
0	09/08/14	PRE-FINAL (90%) DESIGN		MD	KJ	VMB	VMB

REVISIONS

APPROVED BY: ISO; SUPV VMB; DSGN KDD; DWN MD; CHKD VMB; OK VMB; DATE 09/08/14; SCALES

TOPOCK GROUNDWATER REMEDIATION PROJECT
AERIAL CROSSING
PIPELINE "A"
SECTIONS AND DETAILS
GAS TRANSMISSION & DISTRIBUTION
PACIFIC GAS AND ELECTRIC COMPANY
SAN FRANCISCO, CALIFORNIA

MICROFILM | BILL OF MATL | DWG LIST | SUPSDS | SUPSD BY

SHEET NO. S-07-07 of SHEETS | REV 0

PLOT DATE: $PLOTDATE PLOT TIME: $PLOTTIME

FILENAME: E2-S-XXX-0705.dwg

N180B

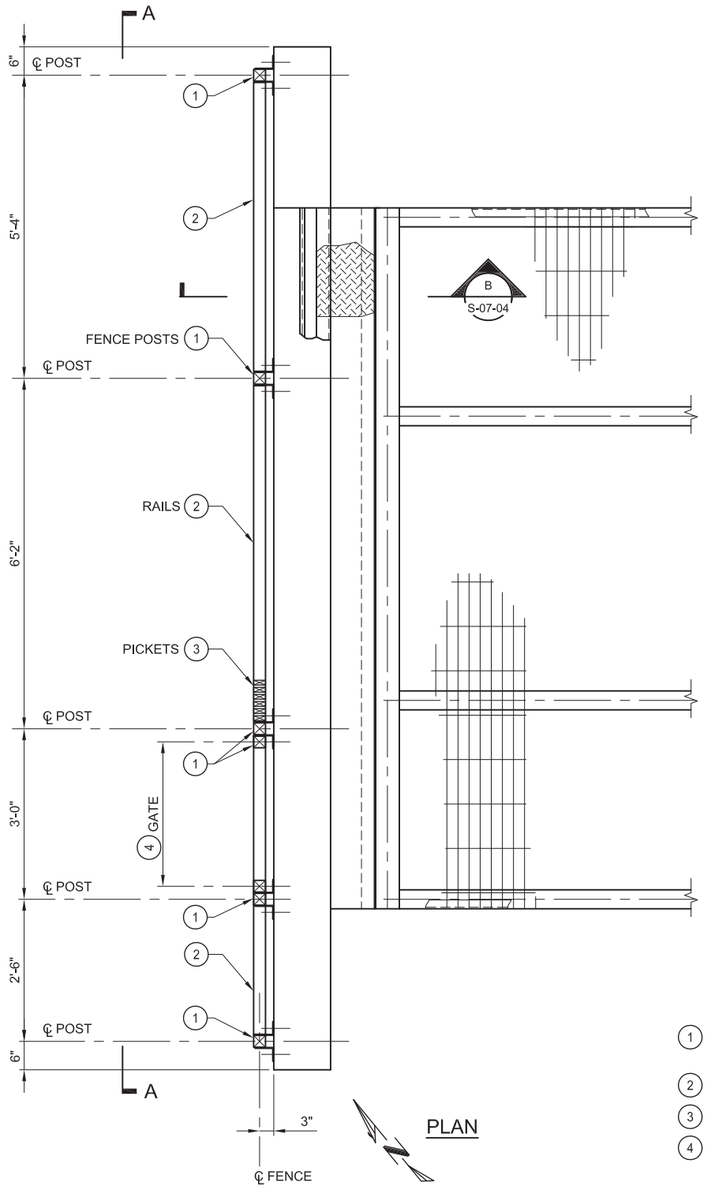

PLAN

KEY NOTES:

1. FENCE POSTS - 2 1/2"x 2 1/2"x 0.075". PROVIDE CAP AT TOP AND BOTTOM.
2. RAIL - 2 1/2"x 2 1/2"x 0.075
3. PICKETS - 1x1x 0.065" @ 1 1/2" C/C
4. PROVIDE ACCESS GATE TO MATCH FENCE. ADDITIONAL REQUIREMENTS FOR ACCESS GATE PER DETAIL 1 ON DWG. C-00-07.

1 DETAIL - SECURITY FENCE
3/4" = 1'-0"
S-07-03, S-07-06

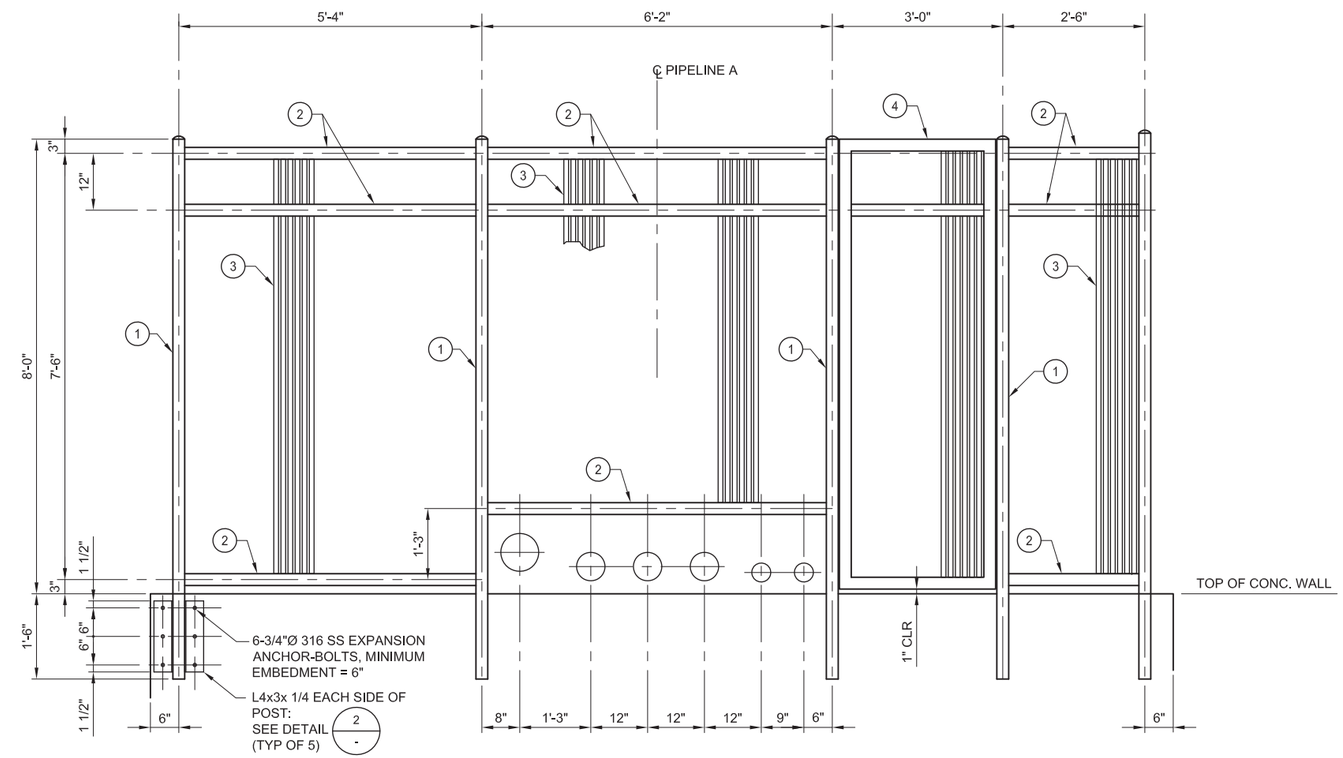

A-A ELEVATION

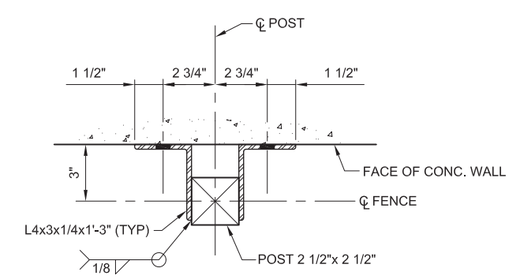

2 DETAIL
3" = 1'-0"

DRAFT NOT FOR CONSTRUCTION

E2 Consulting Engineers, Inc.
1900 Powell Street, Ste. 250
Emeryville, CA 94608
(510) 652-1164

CH2MHILL®

NO.	DATE	DESCRIPTION	GM/SPEC	DWN	CHKD	SUPV	APVD BY
0	09/08/14	PRE-FINAL (90%) DESIGN		MD	KJ	VMB	VMB

REVISIONS

APPROVED BY
SO
SUPV VMB
DSGN VMB/KJ
DWN MD
CHKD VMB
OK VMB
DATE 9/8/14
SCALES

TOPOCK GROUNDWATER REMEDIATION PROJECT
AERIAL CROSSING
PIPELINE "A"
SECTIONS AND DETAILS
GAS TRANSMISSION & DISTRIBUTION
PACIFIC GAS AND ELECTRIC COMPANY
SAN FRANCISCO, CALIFORNIA

MICROFILM
BILL OF MATL
DWG LIST
SUPSDS
SUPSD BY
SHEET NO. of SHEETS
S-07-08
REV 0

PLOT DATE: $PLOTDATE PLOT TIME: $PLOTTIME
FILENAME: E2-S-XXX-0703.dwg

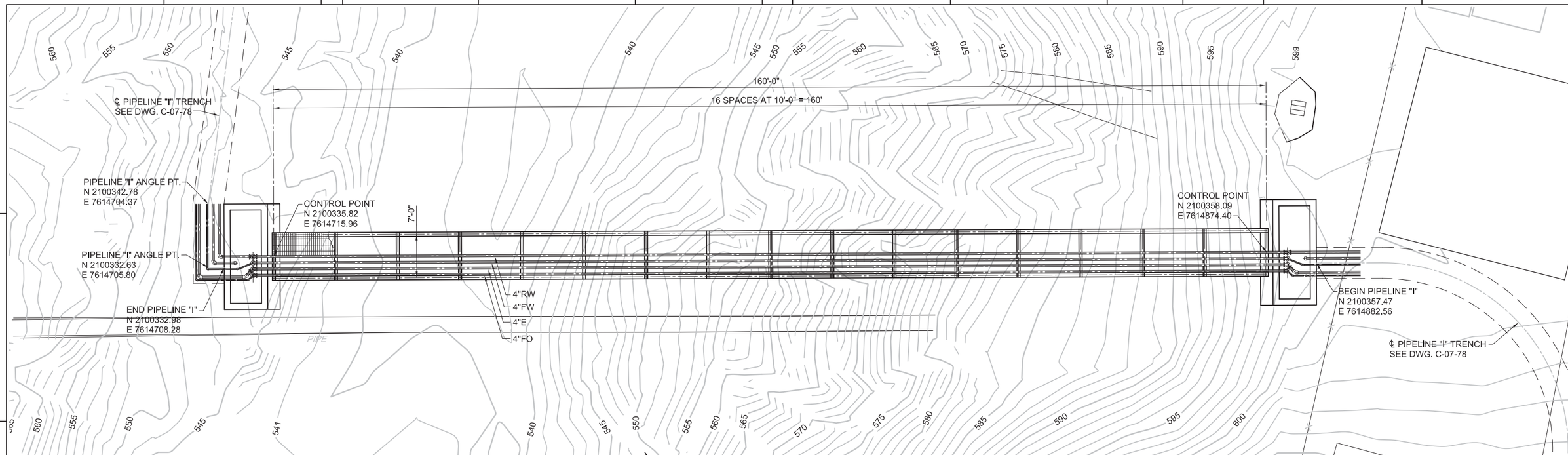

AERIAL CROSSING PLAN

1/8" = 1'-0"

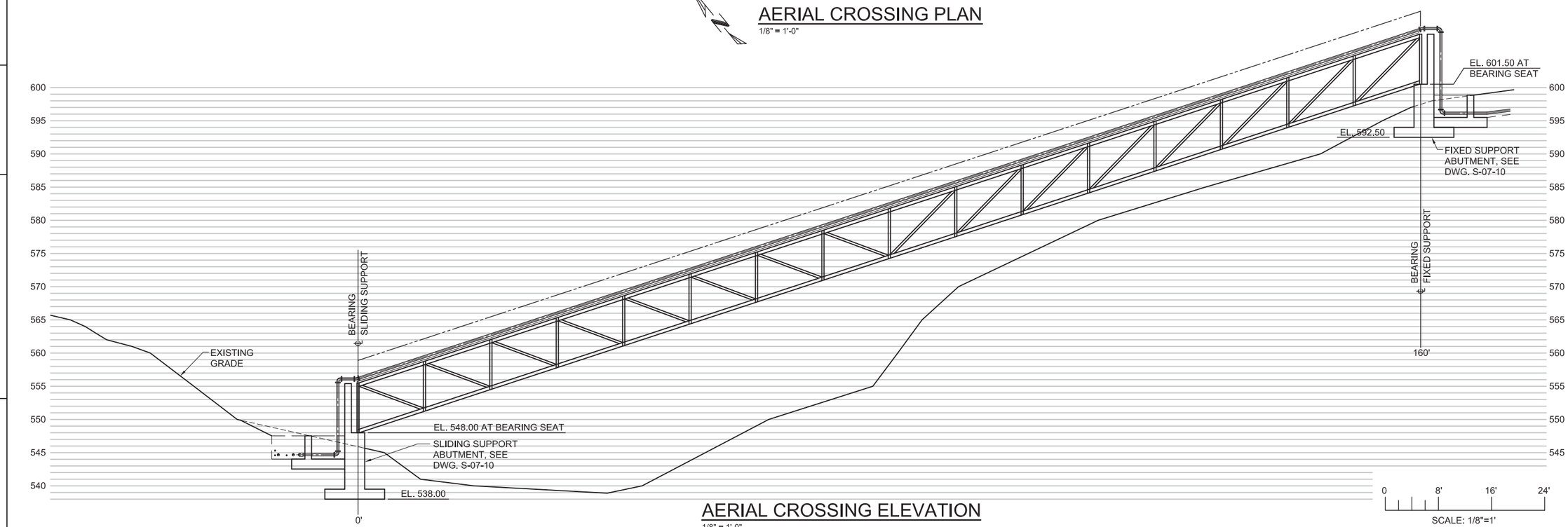

AERIAL CROSSING ELEVATION

1/8" = 1'-0"

DRAFT
NOT FOR
CONSTRUCTION

E2 Consulting Engineers, Inc.
1900 Powell Street, Ste. 250
Emeryville, CA 94608
(510) 652-1164

CH2MHILL®

NO.	DATE	DESCRIPTION	GM/SPEC	DWN	CHKD	SUPV	APVD BY
1	9/8/14	PRE-FINAL (90%) DESIGN		WTH	KJ	VMB	VMB
0	4/5/13	INTERMEDIATE (60%) DESIGN		WTH	KJ	VMB	VMB

REVISIONS

APPROVED BY: SO; SUPV VMB; DSGN KDD; DWN WTH; CHKD KJ; OK VMB; DATE 9/8/14; SCALES

TOPOCK GROUNDWATER REMEDIATION PROJECT
AERIAL CROSSING
PIPELINE "I"

GAS TRANSMISSION & DISTRIBUTION
PACIFIC GAS AND ELECTRIC COMPANY
SAN FRANCISCO, CALIFORNIA

MICROFILM
BILL OF MATL
DWG LIST
SUPSDS
SUPSD BY
SHEET NO. of SHEETS
S-07-09
REV 1

FILENAME: E2-S-XXX-0709.dwg
PLOT DATE: $PLOTDATE PLOT TIME: $PLOTTIME

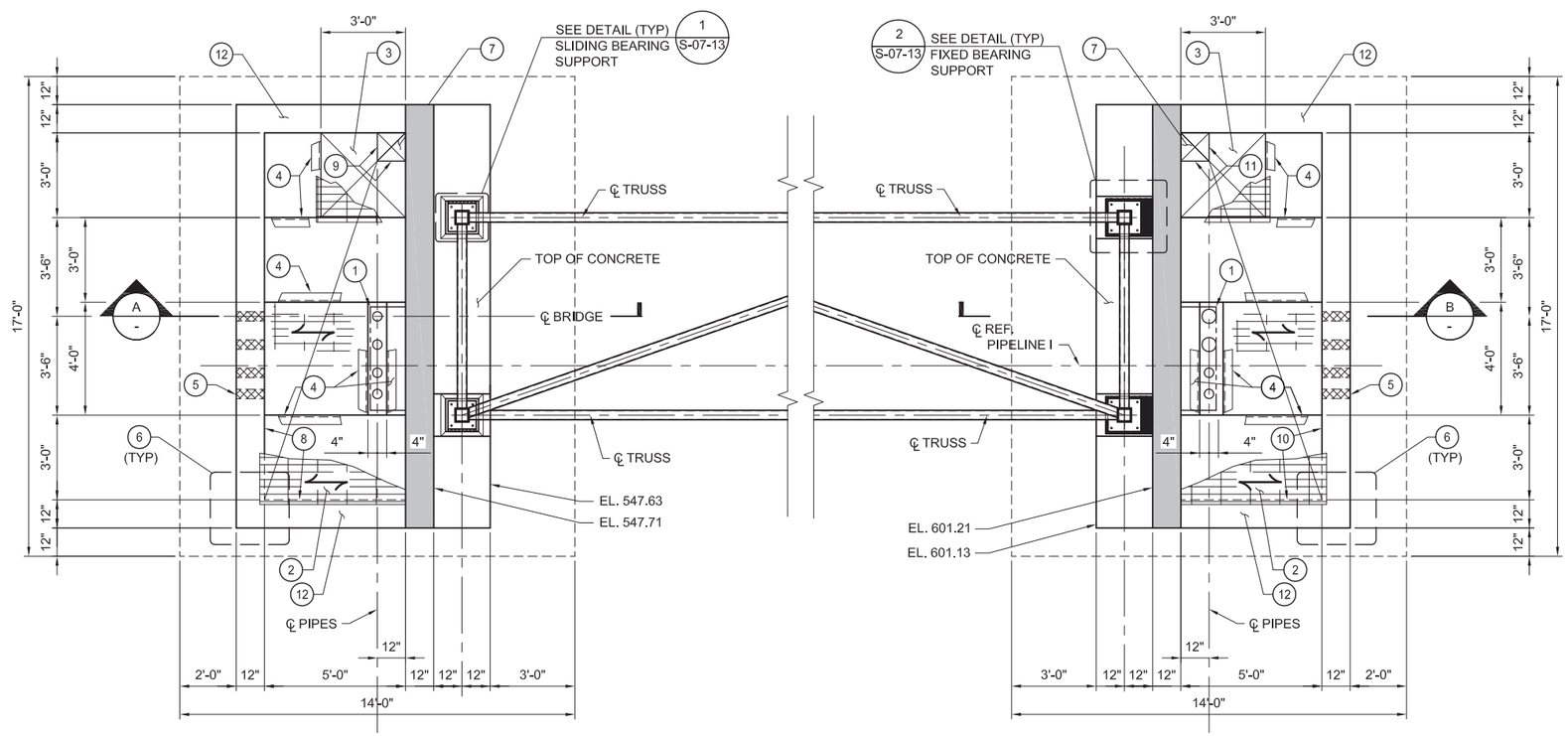

SLIDING SUPPORT
ABUTMENT

FIXED SUPPORT
ABUTMENT

PLAN
3/8" = 1'-0"

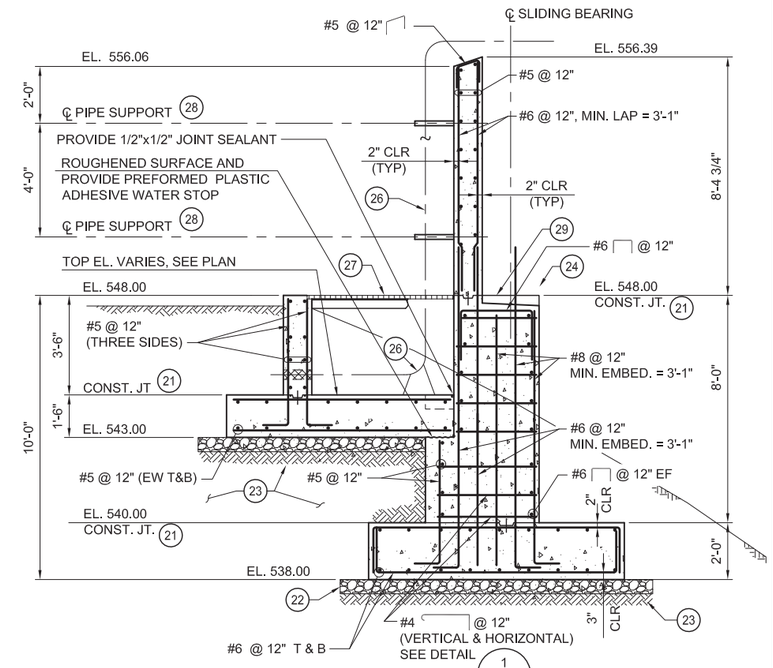

A SECTION
3/8" = 1'-0"

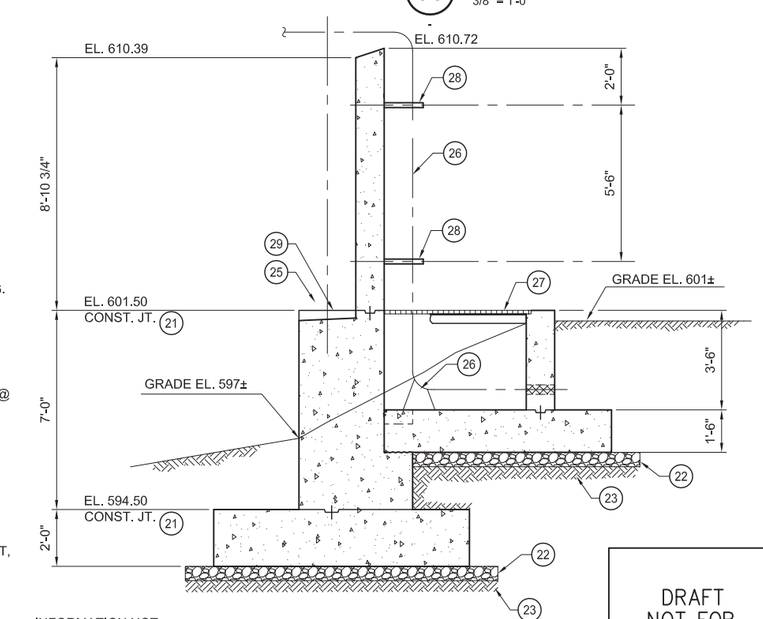

INFORMATION NOT SHOWN OR CALLED OUT, SEE SECTION A

B SECTION
3/8" = 1'-0"

KEY NOTES: (PLAN)

1. FOR PIPE SUPPORT, SEE DETAIL 3 ON DWG. S-07-15.
2. 1 1/2" GALVANIZED STEEL GRATING. SEE DETAIL 1 ON DWG. S-00-04.
3. PROVIDE 3' x 3' REMOVABLE GRATING SECTION OVER SUMP.
4. GRATING SUPPORT NUMBERS C9 x 13.4. FOR SUPPORT SEE DETAIL 2 ON DWG S-00-04.
5. PIPE PENETRATION. SEE DETAIL 4 ON DWG. S-00-02.
6. CORNER REINFORCING. SEE DETAIL 6 ON DWG. S-00-02.
7. 12" x 12" x 4" DEEP SUMP.
8. EL. 544.50
9. EL. 544.33
10. EL. 598.00
11. EL. 597.83
12. REINFORCING TO BE SAME AS SHOWN IN SECTION A ON DWG. S-07-10 FOR 12" TRENCH WALL.

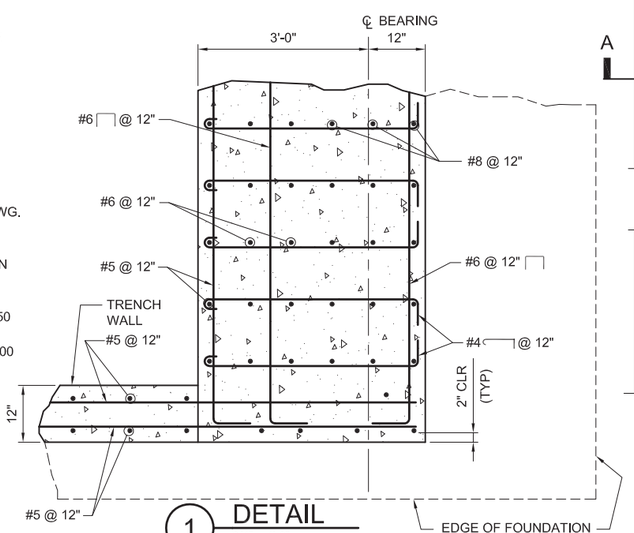

1 DETAIL
3/4" = 1'-0"

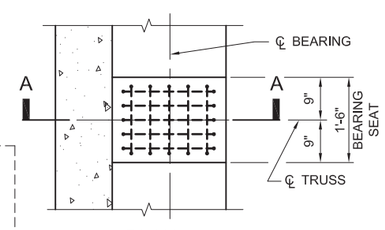

PLAN

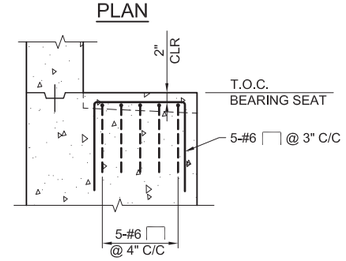

SECTION A-A

2 DETAIL
1/2" = 1'-0"

KEY NOTES: (SECTIONS A&B)

21. CONSTRUCTION JOINT W/ WATERSTOP. SEE DETAIL 1 ON DWG S-00-02.
22. 6" THICK CRUSHED DRAIN ROCK EXTEND MINIMUM 2'-0" BEYOND EDGE OF FOUNDATION.
23. STRUCTURAL FILL, COMPACTED TO 95%.
24. SLIDING BEARING, SEE DETAIL 1 ON DWG. S-07-13.
25. FIXED BEARING, SEE DETAIL 2 ON DWG. S-07-13.
26. ℄ PIPES. PROVIDE 90° ELBOW SUPPORT @ BASE.
27. GRATING AND SUPPORT MEMBERS. SEE PLAN.
28. FOR PIPE SUPPORT, SEE DETAIL 3 ON DWG S-07-15.
29. FOR REINFORCING UNDER BEARING SEAT, SEE DETAIL 2 ON DWG. S-07-10.

DRAFT
NOT FOR
CONSTRUCTION

E2 Consulting Engineers, Inc.
1900 Powell Street, Ste. 250
Emeryville, CA 94608
(510) 652-1164

CH2MHILL®

NO.	DATE	DESCRIPTION	GM/SPEC	DWN	CHKD	SUPV	APVD BY
0	09/08/14	PRE-FINAL (90%) DESIGN		MD	KJ	VMB	VMB

REVISIONS

APPROVED BY		
	SO	
	SUPV	VMB
	DSGN	KJ
	DWN	MD
	CHKD	KJ/KDD
	OK	VMB
	DATE	09/08/14
	SCALES	

TOPOCK GROUNDWATER REMEDIATION PROJECT
AERIAL CROSSING PIPELINE "A"
ABUTMENT - PLAN,
SECTIONS AND DETAILS
GAS TRANSMISSION & DISTRIBUTION
PACIFIC GAS AND ELECTRIC COMPANY
SAN FRANCISCO, CALIFORNIA

MICROFILM	
BILL OF MATL	
DWG LIST	
SUPSDS	
SUPSD BY	
SHEET NO. of SHEETS	
S-07-10	REV 0

FILENAME: E2-S-XXX-0202AD.dwg
PLOT DATE: $PLOTDATE PLOT TIME: $PLOTTIME

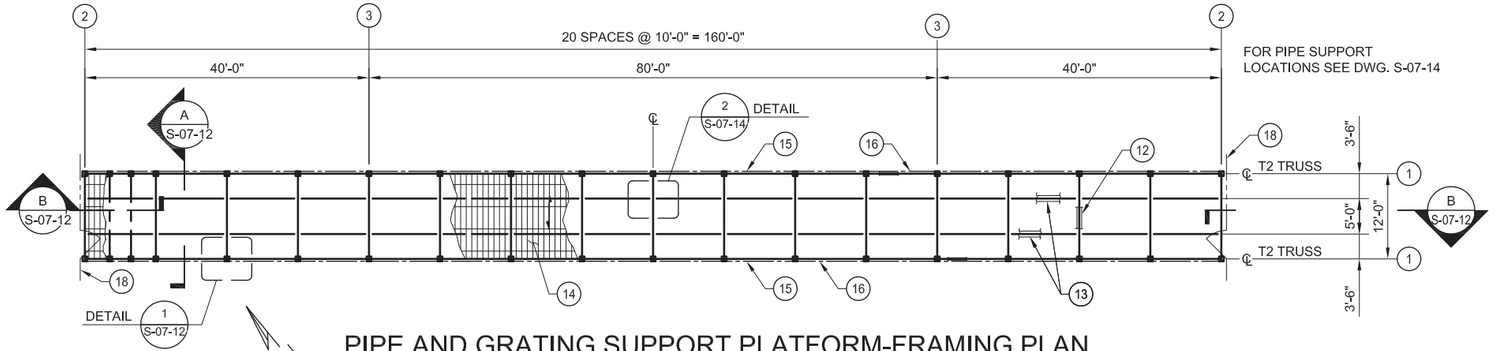

PIPE AND GRATING SUPPORT PLATFORM-FRAMING PLAN

3/32" = 1'-0"

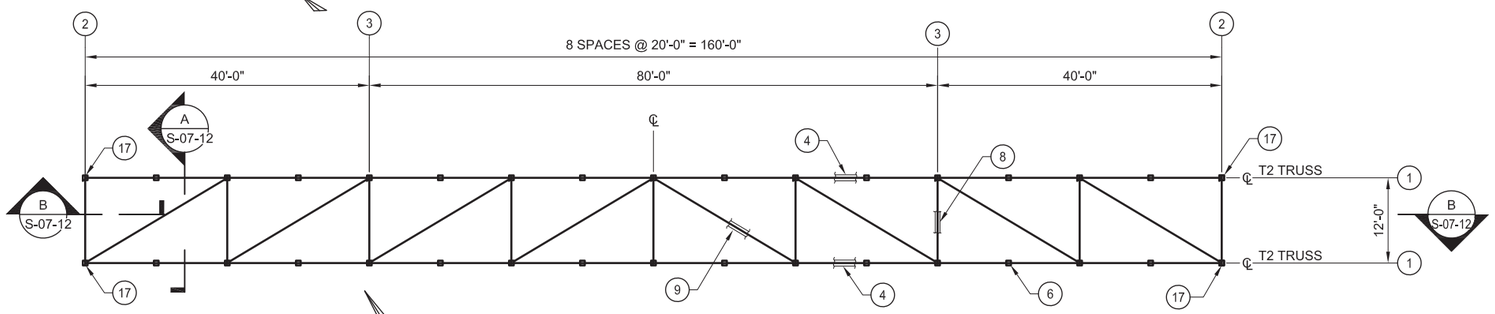

TOP CORD HORIZONAL BRACING PLAN

3/32" = 1'-0"

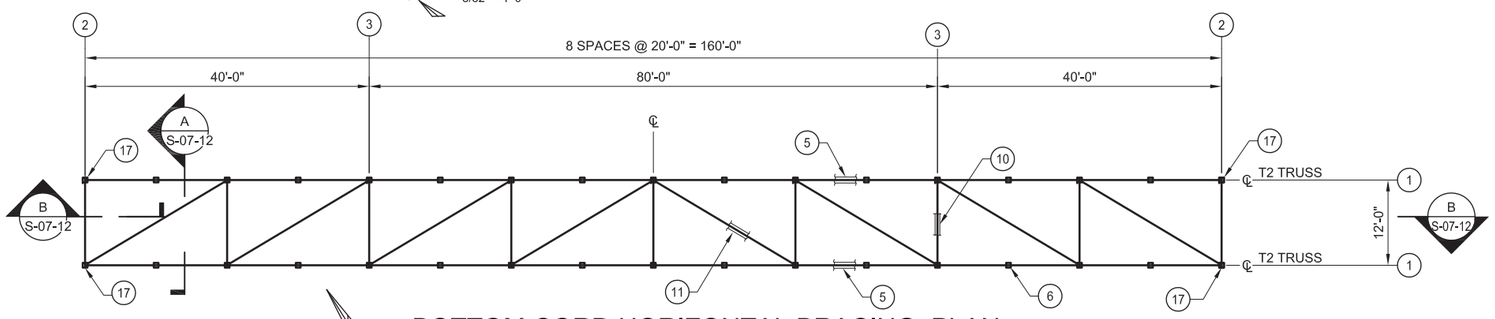

BOTTOM CORD HORIZONTAL BRACING PLAN

3/32" = 1'-0"

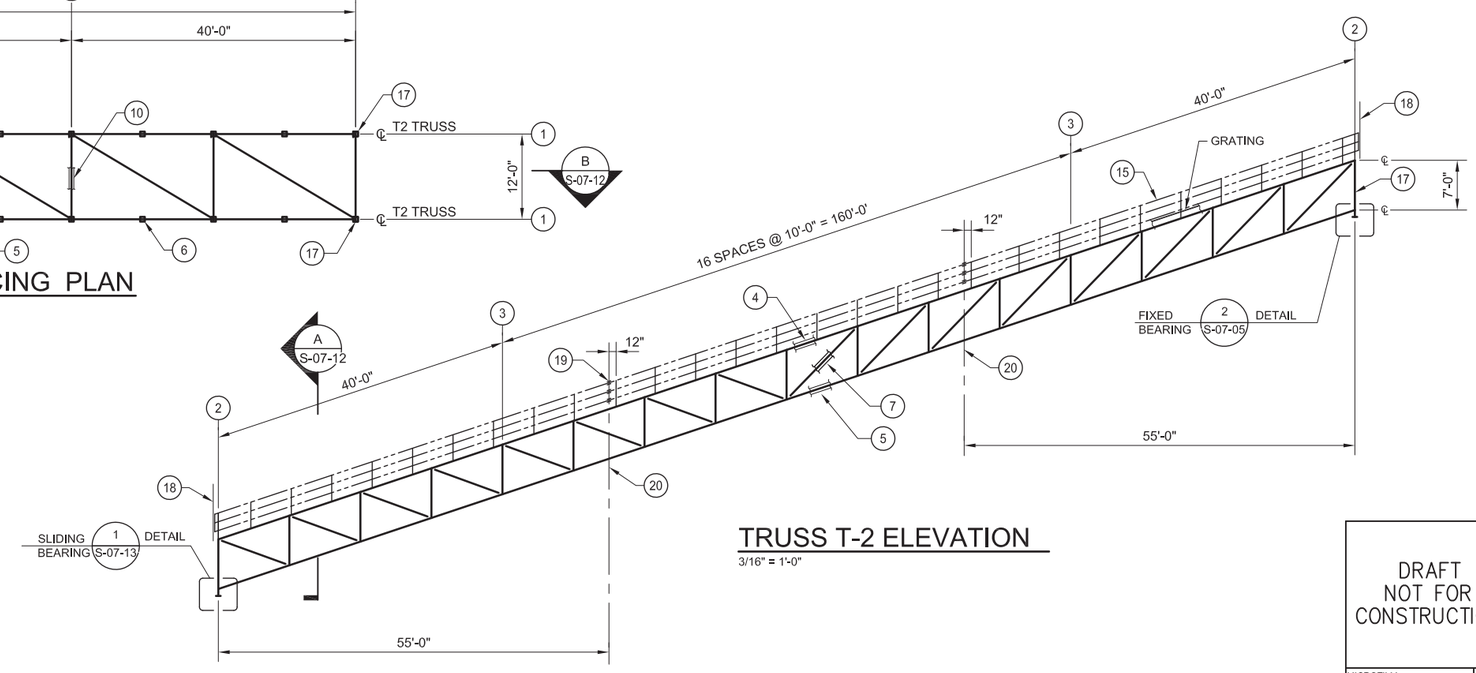

TRUSS T-2 ELEVATION

3/16" = 1'-0"

NOTES:

1. THE 180 FT TRUSS TOP CHORD AND BOTTOM CHORD TO BE SHOP CAMBERED SEVEN INCHES UPWARD AT CENTER OF TRUSS.
2. ALL STEEL TO BE HOT DEEP GALVANIZED AND PAINTED PER PROJECT SPECIFICATIONS.
3. FOR GENERAL STRUCTURAL NOTES, SEE DWG. S-00-01.

KEY NOTES:

1. ℄ T2 TRUSS
2. END VERTICAL BRACING - SEE SECTION A ON DWG S-07-12
3. INTERMEDIATE VERTICAL BRACING - SEE SECTION A ON DWG S-07-12
4. HSS 6X4X3/8 - TRUSS T-2 TOP CORD - SEE NOTE 1
5. HSS 6X4X1/4 - TRUSS T-2 BOTTOM CORD - SEE NOTE 1
6. HSS 4X4X3/16 - TRUSS T-2 VERTICAL POST
7. HSS 4X4X3/16 - TRUSS T-1 DIAGONAL
8. HSS 4X4X3/16 - TOP CHORD HORIZONTAL BRACING
9. HSS 4X4X3/16 - TOP CHORD HORIZONTAL DIAGONAL BRACING
10. HSS 4X4X3/16 - BOTTOM CHORD HORIZONTAL BRACING
11. HSS 4X4X3/16 - BOTTOM CHORD HORIZONTAL DIAGONAL BRACING
12. HSS 5X5X3/8 - TOP CORD PLATFORM BEAM
13. HSS 5X5X1/4 - TOP CORD PLATFORM BEAM
14. 1 1/2" GALV. GRATING - TOP CORD PLATFORM GRATING
15. GALVANIZED STEEL HANDRAIL - SEE DETAIL 3 ON DWG. S-07-04
16. C5X9 - GRATING SUPPORT BEAM
17. HSS 6X6X1/2 - END VERTICAL SUPPORTS
18. SECURITY FENCE W/ 4'-0" GATE. SEE DETAIL 1 ON DWG. S-07-08
19. HR EXPANSION JOINT (ALL THREE HORIZONTAL RAILS) SEE DETAIL 2 ON DWG. S-00-03.
20. TRUSS FIELD SPLICE LOCATIONS. SEE DETAIL 4 ON DWG. S-07-04

DRAFT
NOT FOR
CONSTRUCTION

E2 Consulting Engineers, Inc.
1900 Powell Street, Ste. 250
Emeryville, CA 94608
(510) 652-1164

CH2MHILL®

NO.	DATE	DESCRIPTION	GM/SPEC	DWN	CHKD	SUPV	APVD BY
0	09/08/14	PRE-FINAL (90%) DESIGN		MD	KJ	VMB	VMB

REVISIONS

APPROVED BY		
	SO	
	SUPV	VMB
	DSGN	KDD/KJ
	DWN	PH/MD
	CHKD	KJ/KDD
	OK	VMB
	DATE	9/8/14
	SCALES	

TOPOCK GROUNDWATER REMEDIATION PROJECT
AERIAL CROSSING
PIPELINE "i"
PLANS AND ELEVATION
GAS TRANSMISSION & DISTRIBUTION
PACIFIC GAS AND ELECTRIC COMPANY
SAN FRANCISCO, CALIFORNIA

MICROFILM
BILL OF MATL
DWG LIST
SUPSDS
SUPSD BY
SHEET NO. S-07-11 of SHEETS
REV 0

FILENAME: E2-S-XXX-0703.dwg
PLOT DATE: $PLOTDATE PLOT TIME: $PLOTTIME

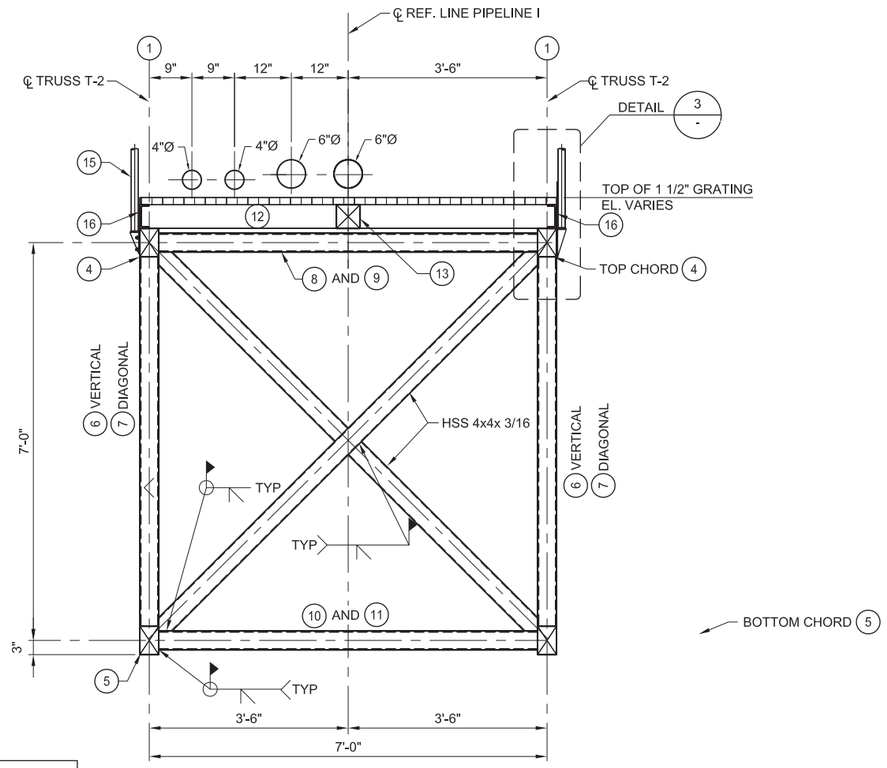

FOR KEY NOTES, SEE SHEET S-07-03

A SECTION
3/4" = 1'-0"

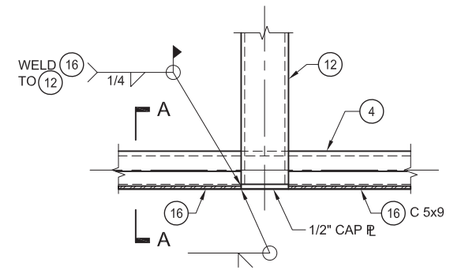

PLAN

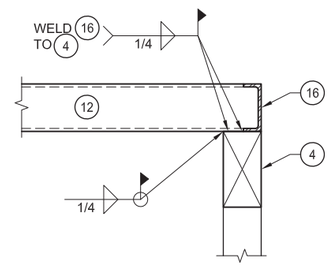

A-A SECTION

1 DETAIL
1 1/2" = 1'-0"
S-07-11

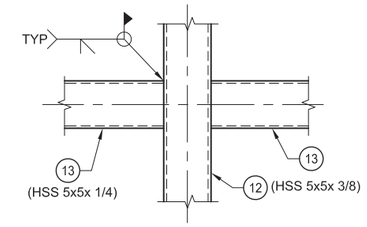

2 DETAIL
1 1/2" = 1'-0"
S-07-11

FOR KEY NOTES, SEE SHEET S-07-03

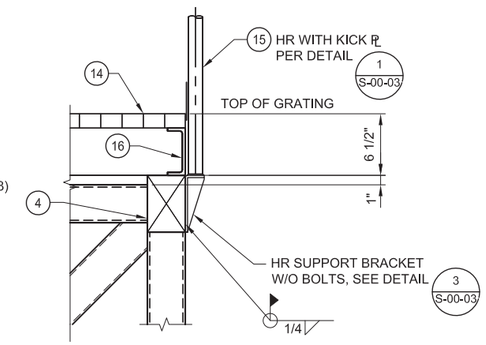

3 HANDRAIL DETAIL
1 1/2" = 1'-0"
S-07-11

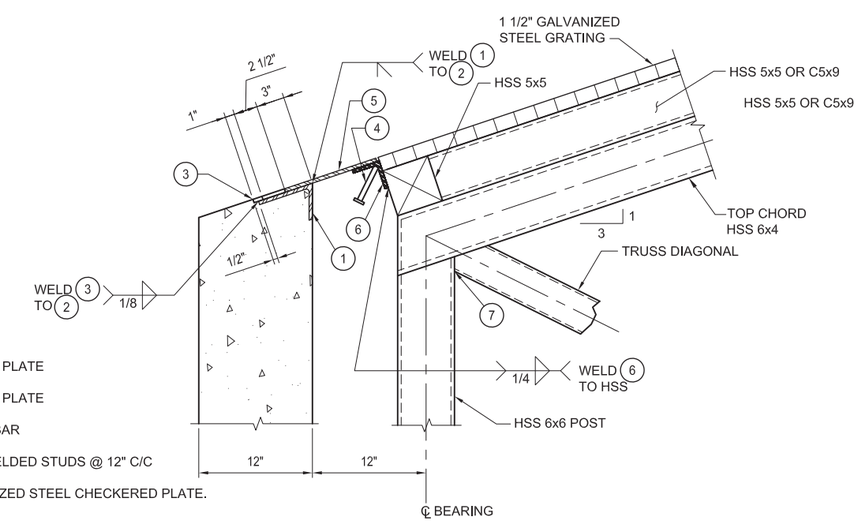

KEY NOTES:

1. 3/8"x4" STEEL PLATE
2. 3/8"x6" STEEL PLATE
3. 3/8"x1" FLAT BAR
4. 1/2"Ø x 4" WELDED STUDS @ 12" C/C
5. 3/8" GALVANIZED STEEL CHECKERED PLATE.
6. L 3 x 3x 3/8"
7. 1/2" END PLATE WELDED TO HSS MEMBERS

B SECTION

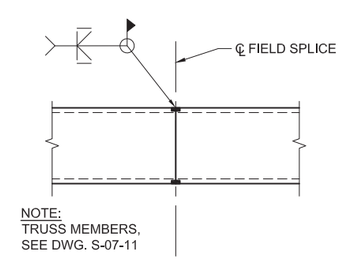

NOTE:
TRUSS MEMBERS, SEE DWG. S-07-11

TOP & BOTTOM CHORD MEMBERS

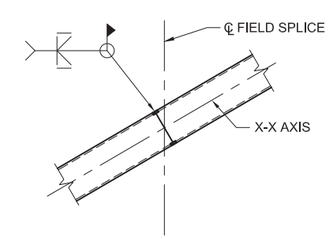

DIAGONAL MEMBERS

4 DETAIL
1 1/2" = 1'-0"
S-07-11

1' 0' 1' 2'
SCALE: 3/4" = 1'-0"

DRAFT NOT FOR CONSTRUCTION

E2 Consulting Engineers, Inc.
1900 Powell Street, Ste. 250
Emeryville, CA 94608
(510) 652-1164

CH2MHILL®

NO.	DATE	DESCRIPTION	GM/SPEC	DWN	CHKD	SUPV	APVD BY
				MD	KJ	VMB	VMB

REVISIONS

APPROVED BY
SO
SUPV VMB
DSGN VMB/KJ
DWN PH
CHKD PT
OK VMB
DATE 6/30/14
SCALES

TOPOCK GROUNDWATER REMEDIATION PROJECT
AERIAL CROSSING
PIPELINE "I"
SECTIONS AND DETAILS
GAS TRANSMISSION & DISTRIBUTION
PACIFIC GAS AND ELECTRIC COMPANY
SAN FRANCISCO, CALIFORNIA

MICROFILM
BILL OF MATL
DWG LIST
SUPSDS
SUPSD BY
SHEET NO. of SHEETS
S-07-12
REV 1

PLOT DATE: $PLOTDATE PLOT TIME: $PLOTTIME
FILENAME: E2-S-XXX-0703.dwg

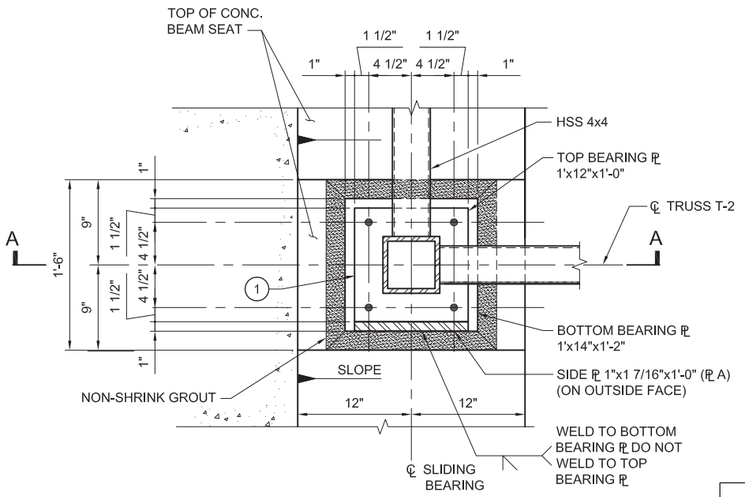

PLAN

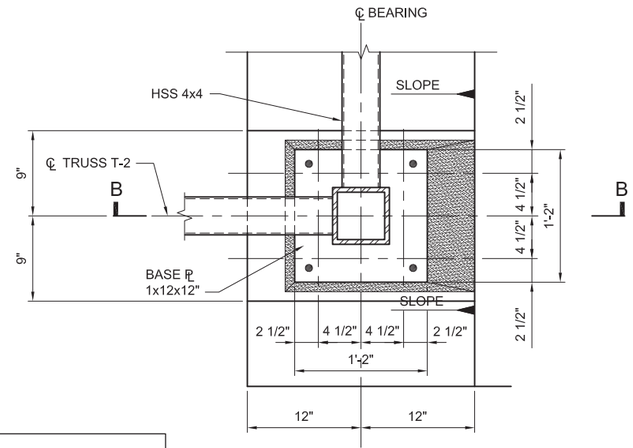

PLAN

NOTES:
1. PROVIDE FLUROGOLD SLIDE BEARING FC-1010-CS 1/4L -10"X10"

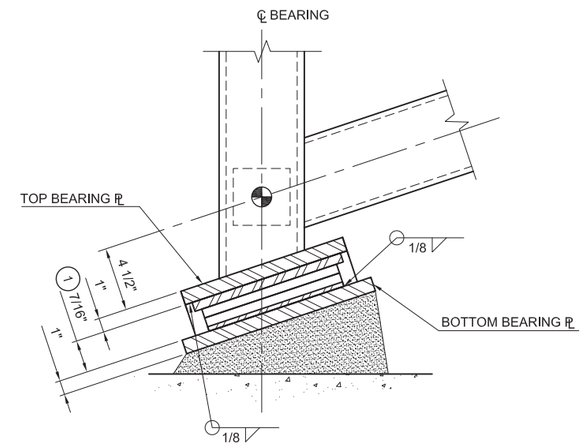

3 DETAIL
NO SCALE

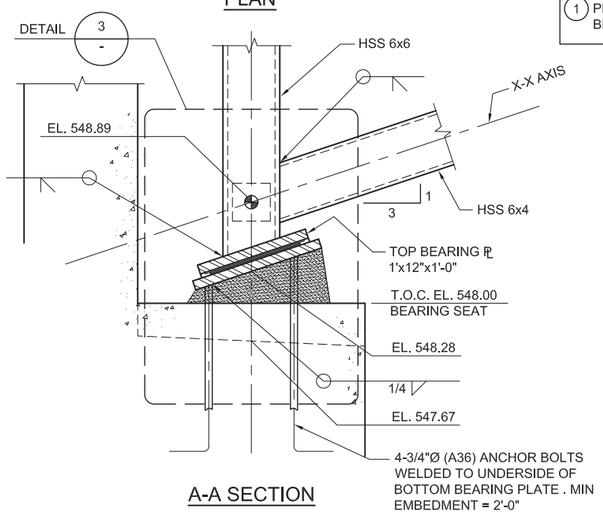

A-A SECTION

1 DETAIL - SLIDING BEARING
1 1/2" = 1'-0"
S-07-11

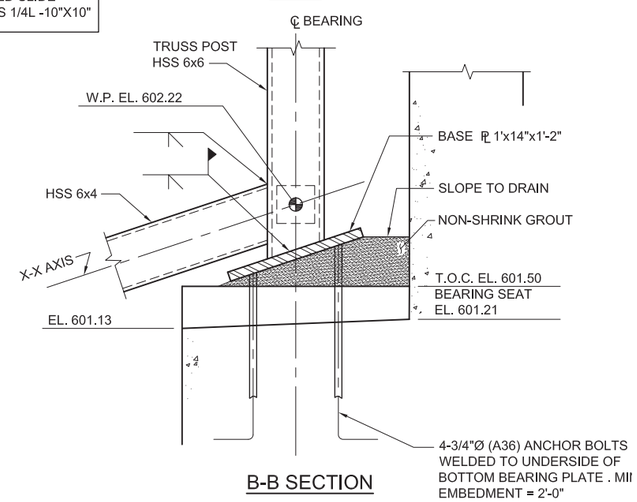

B-B SECTION

2 DETAIL - FIXED BEARING
1 1/2" = 1'-0"
S-07-11

DRAFT
NOT FOR
CONSTRUCTION

E2 Consulting Engineers, Inc.
1900 Powell Street, Ste. 250
Emeryville, CA 94608
(510) 652-1164

CH2MHILL®

NO.	DATE	DESCRIPTION	GM/SPEC	DWN	CHKD	SUPV	APVD BY
0	09/08/14	PRE-FINAL (90%) DESIGN		MD	VMB	VMB	VMB

REVISIONS

APPROVED BY
SO
SUPV VMB
DSGN KJD
DWN WTH
CHKD VMB
OK VMB
DATE 09/08/14
SCALES

TOPOCK GROUNDWATER REMEDIATION PROJECT
AERIAL CROSSING
PIPELINE "A"
SECTIONS AND DETAILS
GAS TRANSMISSION & DISTRIBUTION
PACIFIC GAS AND ELECTRIC COMPANY
SAN FRANCISCO, CALIFORNIA

MICROFILM
BILL OF MATL
DWG LIST
SUPSDS
SUPSD BY
SHEET NO. of SHEETS
S-07-13
REV 0

PLOT DATE: $PLOTDATE PLOT TIME: $PLOTTIME
FILENAME: E2-S-XXX-0705.dwg

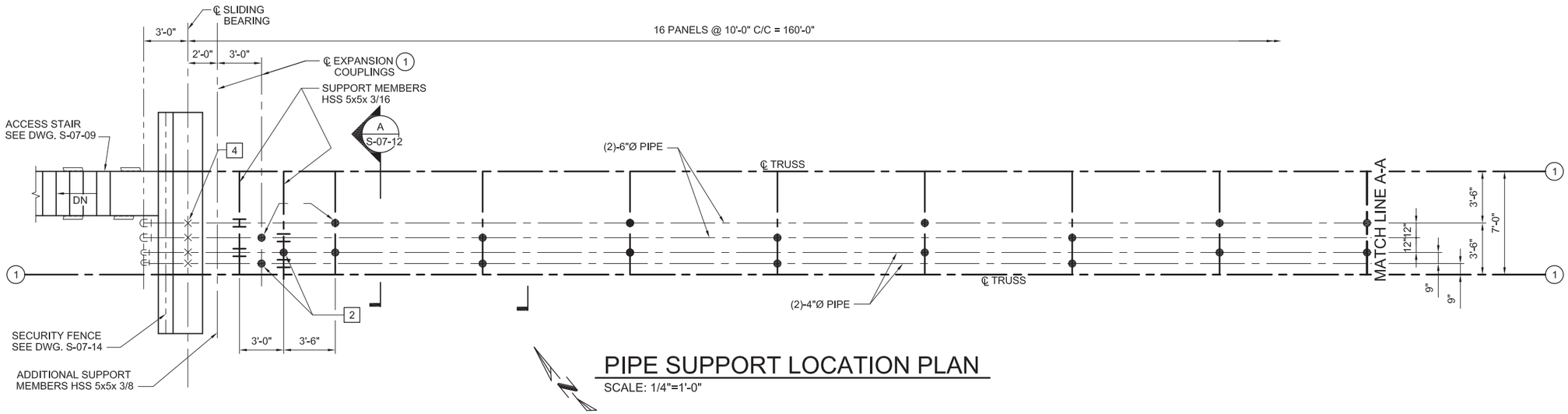

PIPE SUPPORT LOCATION PLAN

SCALE: 1/4"=1'-0"

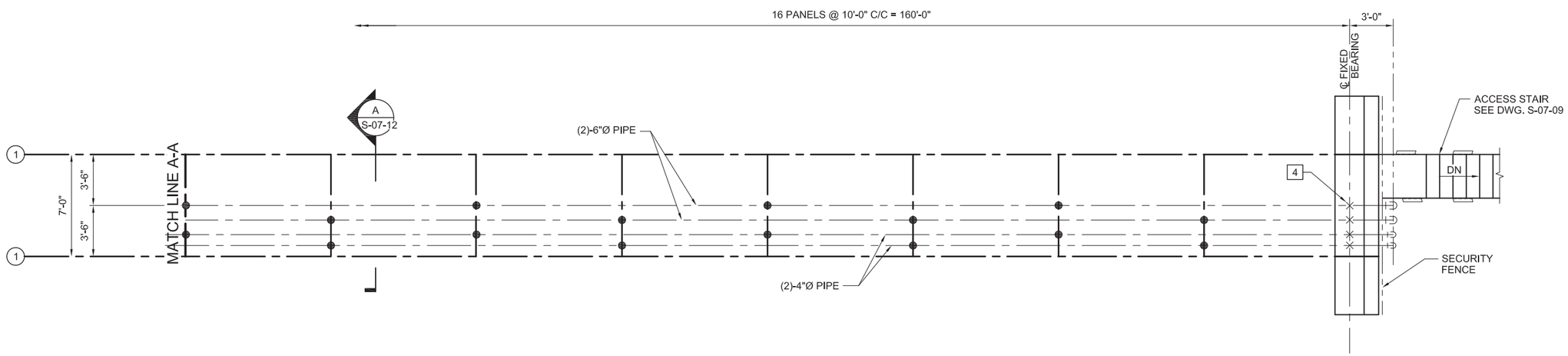

PIPE SUPPORT LOCATION PLAN

SCALE: 1/4"=1'-0"

KEY NOTES:

1. DRESSER EXPANSION JOINT STYLE 63, TYPE I. MAXIMUM EXPANSION = 4"
2. 1 2 INDICATES ROLLER STAND PIPE SUPPORTS. SEE DETAIL 1 ON DWG. S-07-15.
3. 4 INDICATES FIXED PIPE SUPPORTS, SEE DETAIL 2 ON DWG. S-07-07.

DRAFT
NOT FOR
CONSTRUCTION

E2 Consulting Engineers, Inc.
1900 Powell Street, Ste. 250
Emeryville, CA 94608
(510) 652-1164

CH2MHILL®

NO.	DATE	DESCRIPTION	GM/SPEC	DWN	CHKD	SUPV	APVD BY
0	09/08/14	PRE-FINAL (90%) DESIGN		MD	KJ	VMB	VMB

REVISIONS

APPROVED BY: ISO; SUPV VMB; DSGN KJ; DWN MD; CHKD VMB; OK VMB; DATE 9/8/14; SCALES

TOPOCK GROUNDWATER REMEDIATION PROJECT
AERIAL CROSSING
PIPELINE "I"
PIPE SUPPORT AND LOCATIONS
GAS TRANSMISSION & DISTRIBUTION
PACIFIC GAS AND ELECTRIC COMPANY
SAN FRANCISCO, CALIFORNIA

MICROFILM
BILL OF MATL
DWG LIST
SUPSDS
SUPSD BY
SHEET NO. S-07-14 of SHEETS
REV 0

FILENAME: E2-S-XXX-0705.dwg
PLOT DATE: $PLOTDATE PLOT TIME: $PLOTTIME
N180B

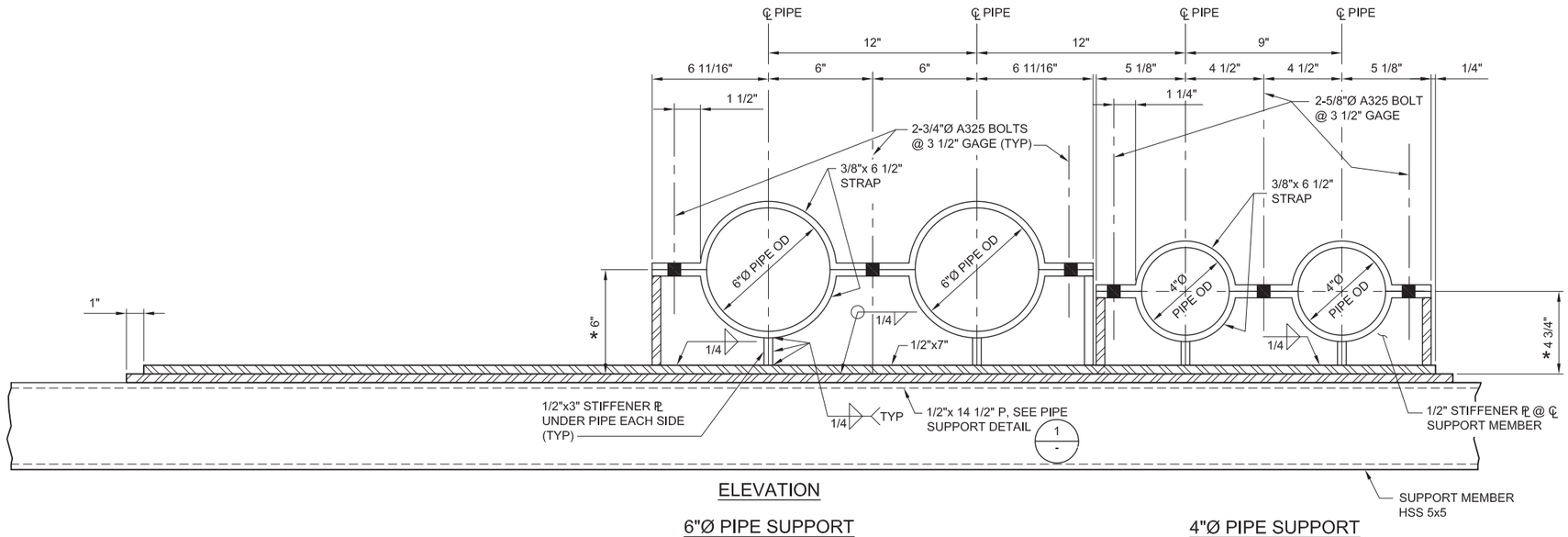

ELEVATION

6"Ø PIPE SUPPORT

4"Ø PIPE SUPPORT

1 PIPE SUPPORT - TYPE 4

3" = 1'-0"

S-07-14

NOTES:

* 1. DIMENSIONS MARKED WITH AN ASTERISK TO BE VERIFIED WITH APPROVED SUBMITTALS.

2. PIPE SUPPORTS TO BE GALVANIZED AND PAINTED PER SPECIFICATION SECTION 099000.

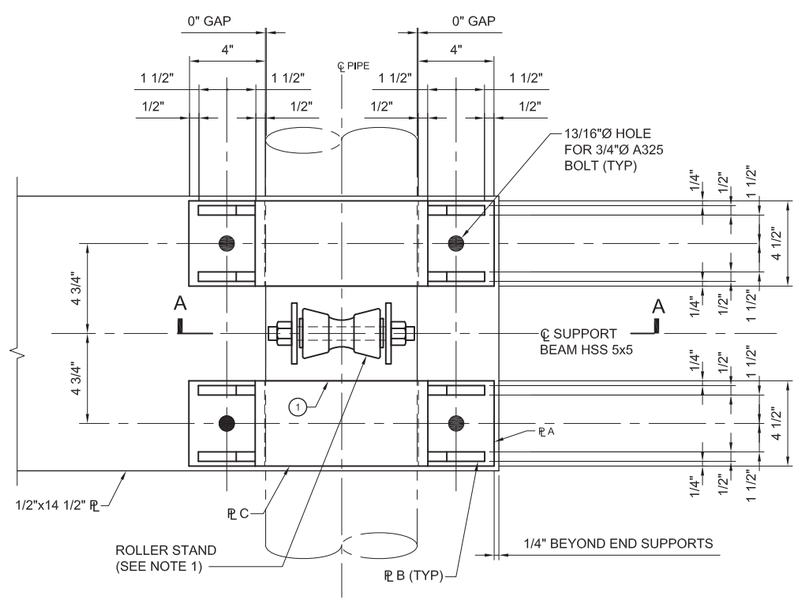

PLAN

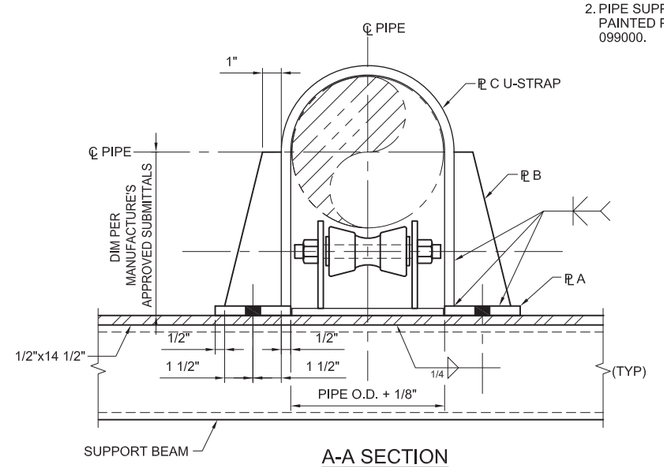

A-A SECTION

NOTES:

(a) BASE PLATE TO BE PROVIDED BY ROLLER STAND MANUFACTURER. MODIFY AS SHOWN. (STEEL A36)

(1) ROLLER STAND: FIGURE 230, AS MANUFACTURERED BY PIPING TECHNOLOGY & PRODUCTS, INC.

(2) DO NOT WELD U-STRAPS TO PIPES

PIPE SUPPORT SCHEDULE							
		ROLLER STAND		PIPE RESTRAINED BRACKET			
PIPE	TYPE	BASE ℙ	NOTE	PLATE A (BASE ℙ)	PLATE B (STIFFENER)	PLATE C (U-STRAP)	NOTE
6" Ø	2	3/8 x 4 1/4 x10"	(a), 1	1/2"	1/2"	1/2" x 4 1/2"	2
4" Ø	3	3/8 x 4 1/4 x10"	(a), 1	3/8"	3/8"	3/8" x 4 1/2"	2

1 PIPE SUPPORT DETAIL

SCALE: NONE

S-07-14

DRAFT
NOT FOR
CONSTRUCTION

E2 Consulting Engineers, Inc.
1900 Powell Street, Ste. 250
Emeryville, CA 94608
(510) 652-1164

CH2MHILL®

NO.	DATE	DESCRIPTION	GM/SPEC	DWN	CHKD	SUPV	APVD BY
0	09/08/14	PRE-FINAL (90%) DESIGN		MD	KJ	VMB	VMB

REVISIONS

APPROVED BY		
	ISO	
	SUPV	VMB
	DSGN	KDD
	DWN	MD
	CHKD	VMB
	OK	VMB
	DATE	09/08/14
	SCALES	

TOPOCK GROUNDWATER REMEDIATION PROJECT
AERIAL CROSSING
PIPELINE "I"
SECTIONS AND DETAILS
GAS TRANSMISSION & DISTRIBUTION
PACIFIC GAS AND ELECTRIC COMPANY
SAN FRANCISCO, CALIFORNIA

MICROFILM
BILL OF MATL
DWG LIST
SUPSDS
SUPSD BY
SHEET NO. of SHEETS
S-07-15
REV 0

PLOT DATE: $PLOTDATE PLOT TIME: $PLOTTIME

FILENAME: E2-S-XXX-0705.dwg

N180B