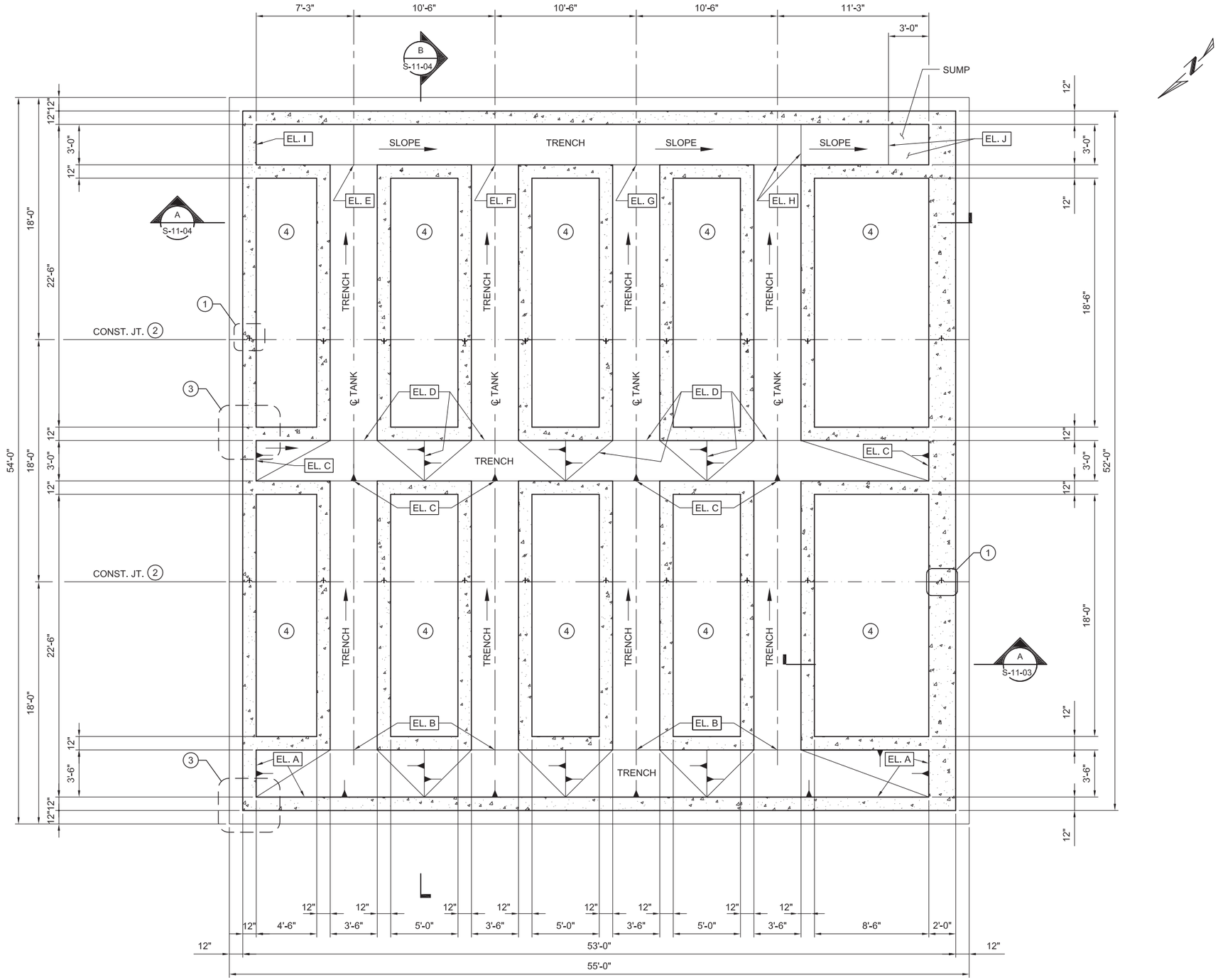

FOUNDATION PLAN

1/4" = 1'-0"

KEY NOTES:

1. WALL VERTICAL CONSTRUCTION JOINT WITH PVC WATERSTOP. SEE DETAIL 3 ON S-00-02.
2. FOUNDATION CONSTRUCTION JOINT WITH PVC WATERSTOP . SEE DETAIL 2 ON S-00-02.
3. DOUBLE REINFORCING WALL DETAIL, SEE DETAIL 5 ON S-00-02.
4. FILL SPACE BETWEEN TOP OF FOOTING AND BELOW SLAB-ON-GRADE WITH STRUCTURAL FILL OR CONTROLLED DENSITY FILL (CDF). SEE SPECIFICATION SECTION 31 23 23.

NOTES:

1. FOR GENERAL NOTES, SEE DWG. S-00-01.
2. COORDINATE PIPE PENETRATION LOCATIONS WITH MECHANICAL DRAWINGS.

ELEVATION TABLE		
EL. "X"	EL.	REMARK
A	622.50	TOP OF CONC. FILL
B	622.33	TOP OF CONC. FILL
C	622.17	TOP OF CONC. FILL
D	622.00	TOP OF CONC. FILL
E	621.83	TOP OF CONC. FILL
F	621.67	TOP OF CONC. FILL
G	621.50	TOP OF CONC. FILL
H	621.33	TOP OF CONC. FILL
I	622.00	TOP OF CONC. FILL
J	621.25	TOP OF SUMP

0 4' 8' 12'

SCALE: 1/4"=1'

DRAFT
NOT FOR
CONSTRUCTION

E2 Consulting Engineers, Inc.
1900 Powell Street, Ste. 250
Emeryville, CA 94608
(510) 652-1164

CH2MHILL®

NO.	DATE	DESCRIPTION	GM/SPEC	DWN	CHKD	SUPV	APVD BY
1	09/08/14	PRE-FINAL (90%) DESIGN		MD	KJ	VMB	VMB
0	04/05/13	INTERMEDIATE (60%) DESIGN		MD	KJ	VMB	VMB

REVISIONS

APPROVED BY
SO
SUPV VMB
DSGN KDD
DWN MD
CHKD KJ
OK VMB
DATE 6/30/14
SCALES 1/4"=1'-0"

TOPOCK GROUNDWATER REMEDIATION PROJECT
INFLUENT TANK FARM
FOUNDATION PLAN

GAS TRANSMISSION & DISTRIBUTION
PACIFIC GAS AND ELECTRIC COMPANY
SAN FRANCISCO, CALIFORNIA

MICROFILM
BILL OF MATL
DWG LIST
SUPSDS
SUPSD BY
SHEET NO. of SHEETS
S-11-01
REV 1

FILENAME: E2-S-XXX-1101AD.dwg
PLOT DATE: $PLOTDATE PLOT TIME: $PLOTTIME

N1808

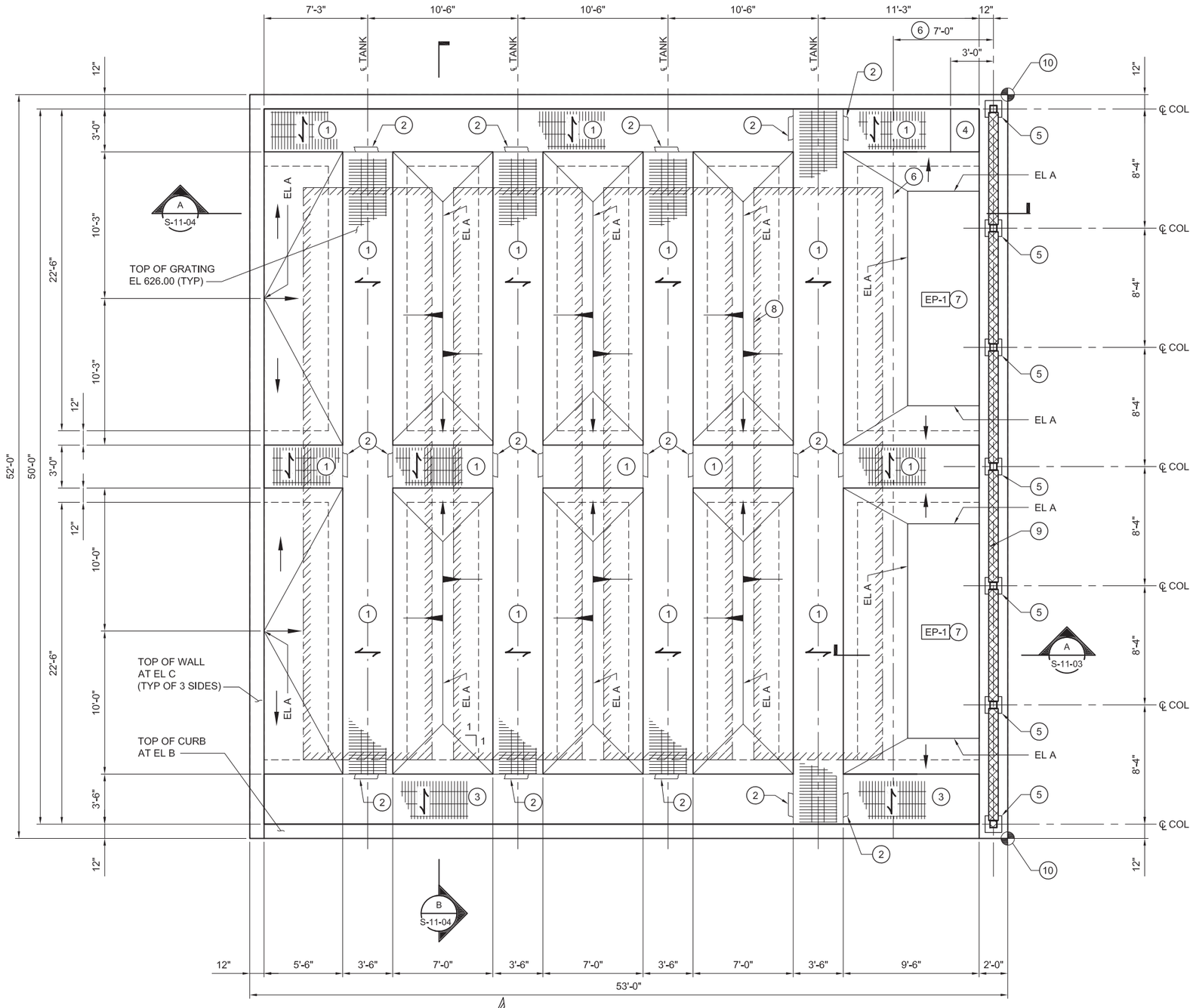

FLOOR PLAN

1/4" = 1'-0"

KEY NOTES:

1. TOP OF 3" DEEP (H14730) FRP FIBERGRATE GRATING. EL. 626.00 UNLESS NOTED OTHERWISE.
2. GRATING SUPPORT CHANNEL. SEE DETAIL 2 ON DWG. S-00-04.
3. TOP OF 3"x1/4" DEEP GALVANIZED STEEL GRATING. (TYPE W-15-4 MANUFACTURED BY GRATING PACIFIC INC.) EL. 626.00 UNLESS NOTED OTHERWISE.
4. REMOVABLE GRATING OVER SUMP.
5. CANOPY COLUMN BASE PLATE. SEE DETAIL 5 ON S-11-05.
6. EDGE OF CANOPY ROOF.
7. EP-1 6" HIGH EQUIPMENT PAD UNLESS NOTED OTHERWISE. SEE DETAIL 9 ON DWG S-00-02. EP PAD SIZE PER MANUFACTURER'S APPROVED SUBMITTALS.
8. INDICATES OUTLINE OF TANK. SEE MECHANICAL DRAWINGS.
9. 8" REINFORCED CONCRETE MASONRY WALL.
10. SEE DWG. C-10-04 FOR COORDINATES.

NOTES:

1. FOR GENERAL STRUCTURAL NOTES, SEE DWG S-00-04.
* 2. DIMENSIONS MARKED WITH AN ASTERISK TO BE VERIFIED WITH MANUFACTURER'S APPROVED SUBMITTALS.

TABLE OF ELEVATIONS	
A	626.17
B	626.17
C	626.50

0 4' 8' 12'

SCALE: 1/4"=1'

DRAFT
NOT FOR
CONSTRUCTION

E2 Consulting Engineers, Inc.
1900 Powell Street, Ste. 250
Emeryville, CA 94608
(510) 652-1164

CH2MHILL®

NO.	DATE	DESCRIPTION	GM/SPEC	DWN	CHKD	SUPV	APVD BY
1	09/08/14	PRE-FINAL (90%) DESIGN		MD			VMB
0	04/05/13	INTERMEDIATE (60%) DESIGN		MD	KJ	VMB	VMB

REVISIONS

APPROVED BY
SO
SUPV VMB
DSGN KDD
DWN MD
CHKD KJ
OK VMB
DATE 6/30/14
SCALES

TOPOCK GROUNDWATER REMEDIATION PROJECT
INFLUENT TANK FARM
FLOOR PLAN

GAS TRANSMISSION & DISTRIBUTION
PACIFIC GAS AND ELECTRIC COMPANY
SAN FRANCISCO, CALIFORNIA

MICROFILM
BILL OF MATL
DWG LIST
SUPSDS
SUPSD BY
SHEET NO. of SHEETS
S-11-02
REV 1

PLOT DATE: $PLOTDATE PLOT TIME: $PLOTTIME
FILENAME: E2-S-XXX-1101AD.dwg

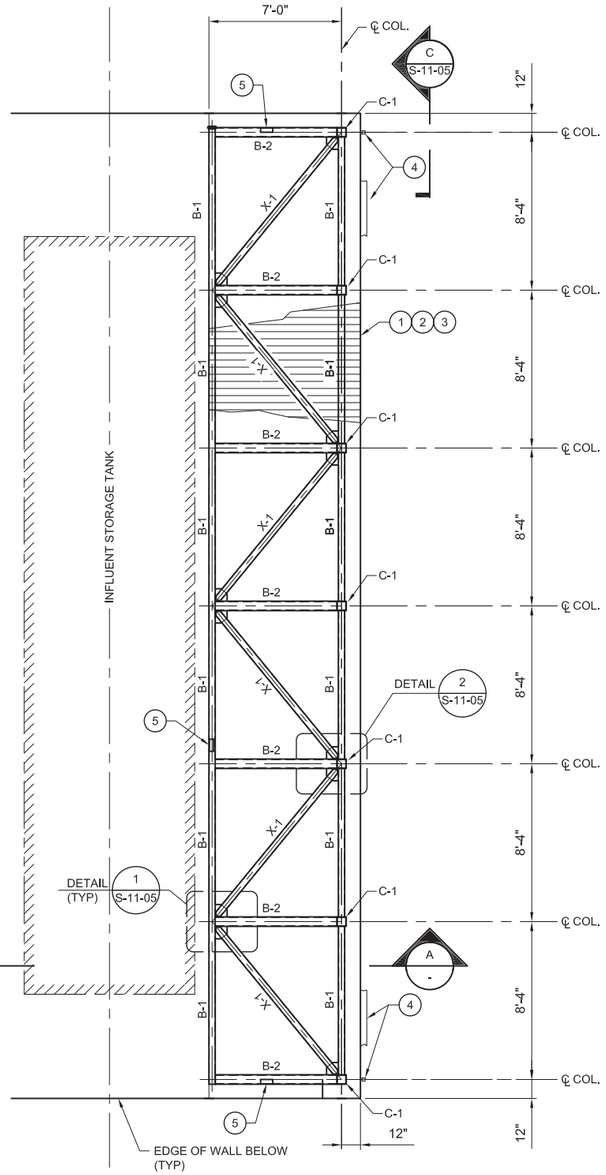

CANOPY PLAN
1/4" = 1'-0"

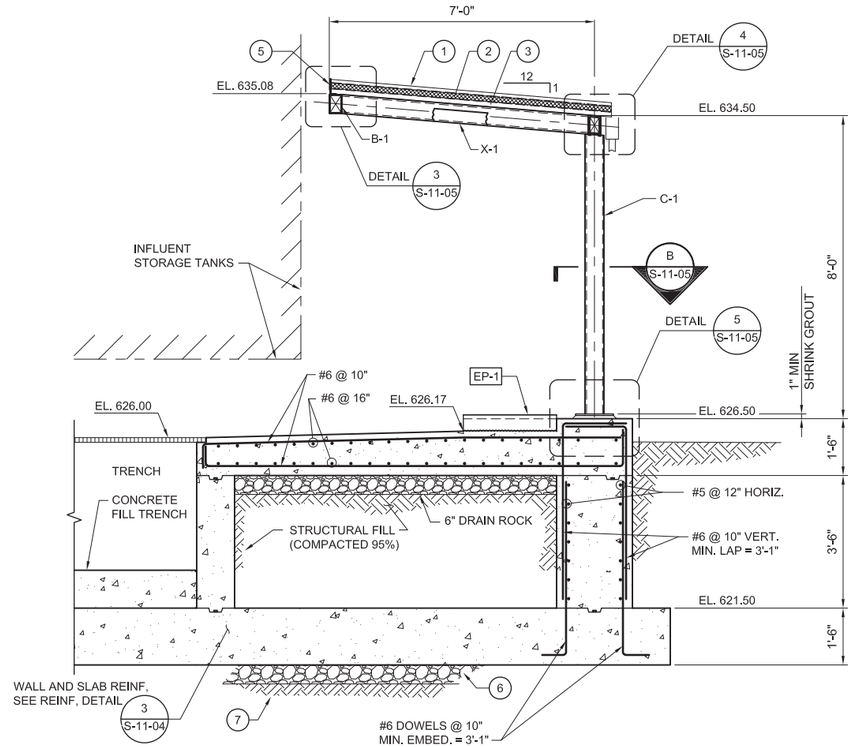

@ COLUMN (MASONRY WALL NOT SHOWN)
1/2" = 1'-0"

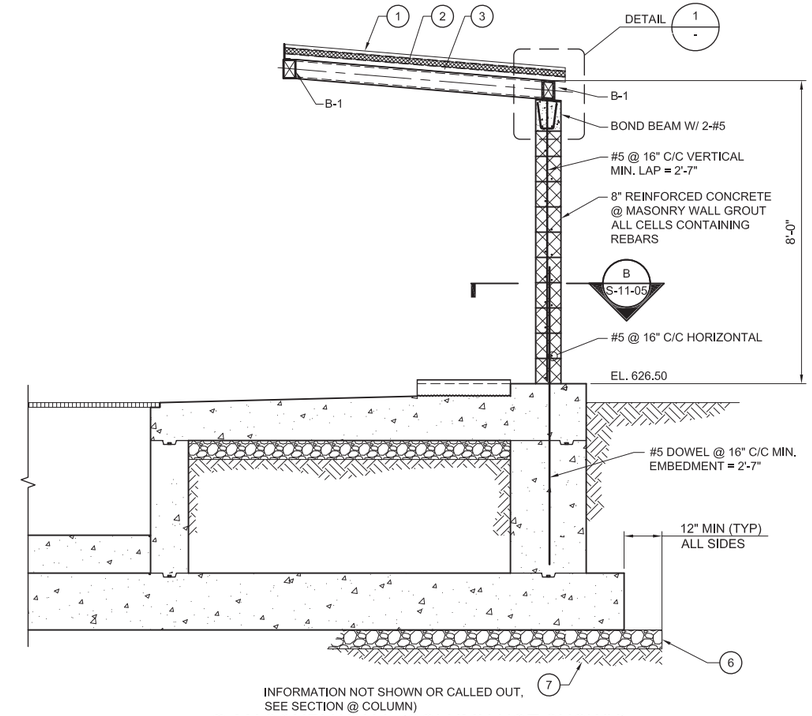

@ MASONRY WALL (COLUMN NOT SHOWN)
1/2" = 1'-0"

A SECTION
1/2" = 1'-0"
S-11-01, S-11-02

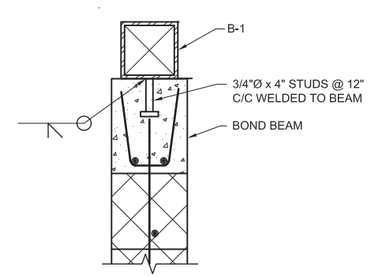

1 DETAIL
1 1/2" = 1'-0"

KEY NOTES:

1. 1 1/2" STANDING SEAM METAL ROOF. SEE ARCHITECTURAL DRAWINGS.
2. 2" RIGID INSULATION
3. 1 1/2" ROOF DECK (SEE DWG S-00-01)
4. GUTTER AND DOWNSPOUT. SEE ARCHITECTURAL DRAWINGS FOR DETAILS.
5. CLOSURE ANGLE THREE SIDES.
6. 6" CRUSHED DRAIN ROCK
7. STRUCTURAL FILL, 90% COMPACTION (MIN.)

NOTES:

1. FOR ADDITIONAL DETAILS, SEE ARCHITECTURAL DWGS.

STEEL BEAM SCHEDULE			
MARK	SIZE	WALL "T"	REMARK
B-1	HSS 6x4	1/4	
B-2	HSS 6x6	3/8	
X-1	HSS 4x4	1/4	HORIZONTAL BRACING
C-1	HSS 6x6	3/8	COLUMNS

DRAFT
NOT FOR
CONSTRUCTION

E2 Consulting Engineers, Inc.
1900 Powell Street, Ste. 250
Emeryville, CA 94608
(510) 652-1164

CH2MHILL®

NO.	DATE	DESCRIPTION	GM/SPEC	DWN	CHKD	SUPV	APVD BY
1	09/08/14	PRE-FINAL (90%) DESIGN		MD			VMB
0	04/05/13	INTERMEDIATE (60%) DESIGN		MD	KJ	VMB	VMB

REVISIONS

APPROVED BY
SO
SUPV VMB
DSGN KDD
DWN MD
CHKD KJ
OK WMB
DATE 6/30/14
SCALES

TOPOCK GROUNDWATER REMEDIATION PROJECT
INFLUENT TANK FARM CANOPY PLAN AND SECTION
GAS TRANSMISSION & DISTRIBUTION
PACIFIC GAS AND ELECTRIC COMPANY
SAN FRANCISCO, CALIFORNIA

MICROFILM
BILL OF MATL
DWG LIST
SUPSDS
SUPSD BY
SHEET NO. of SHEETS
S-11-03
REV 1

PLOT DATE: $PLOTDATE PLOT TIME: $PLOTTIME
FILENAME: E2-S-XXX-1101AD.dwg

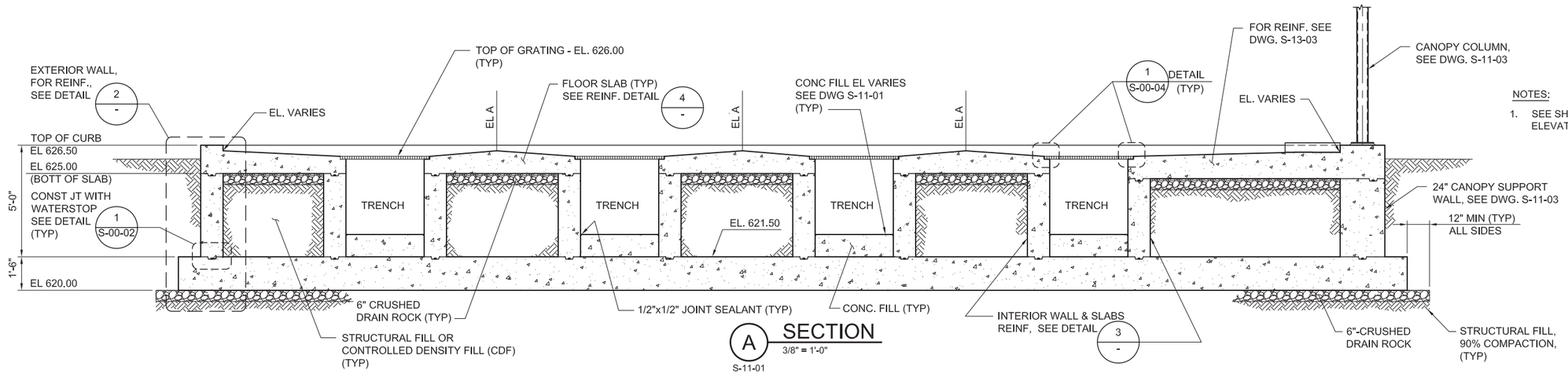

NOTES:

1. SEE SHEET S-11-02 FOR TABLE OF ELEVATIONS.

A SECTION
3/8" = 1'-0"
S-11-01
S-11-02

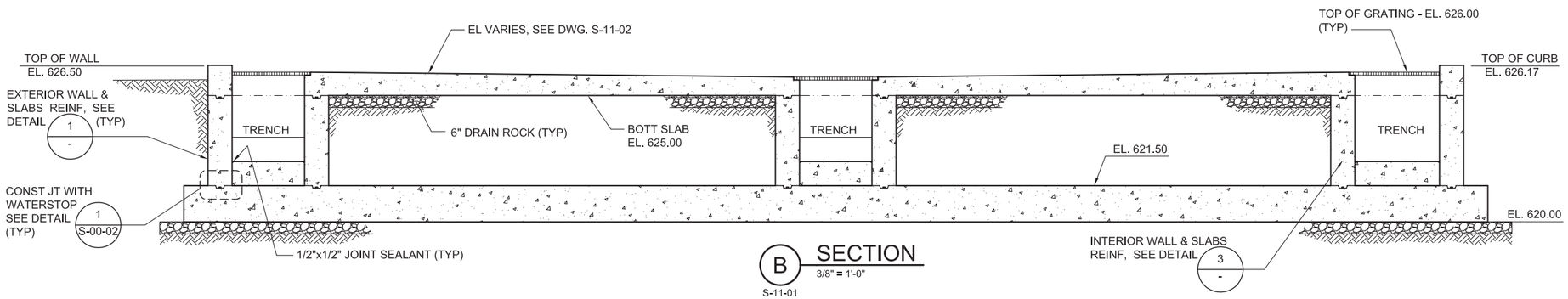

B SECTION
3/8" = 1'-0"
S-11-01
S-11-02

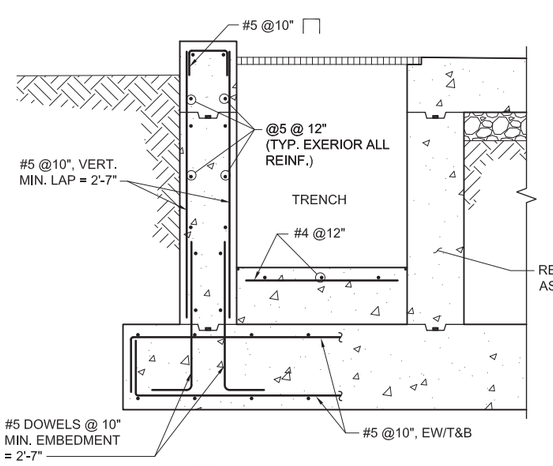

1 DETAIL
3/4" = 1'-0"
-

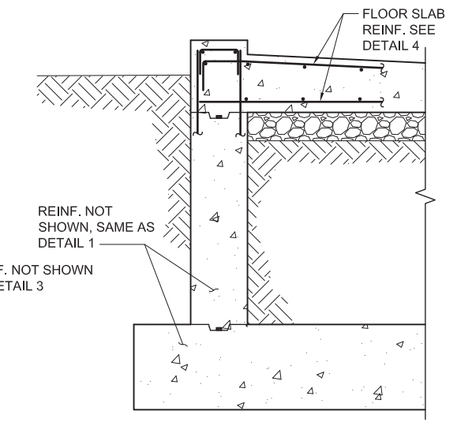

2 DETAIL
3/4" = 1'-0"
-

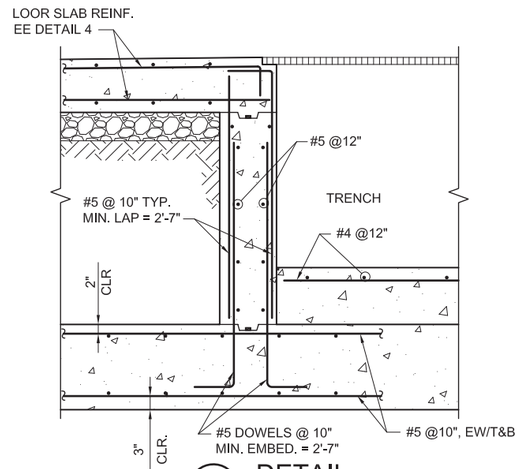

3 DETAIL
3/4" = 1'-0"
-
S-11-03

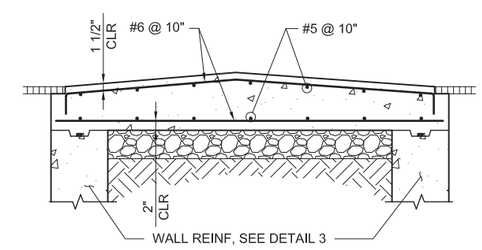

4 DETAIL
3/4" = 1'-0"
-

DRAFT
NOT FOR
CONSTRUCTION

E2 Consulting Engineers, Inc.
1900 Powell Street, Ste. 250
Emeryville, CA 94608
(510) 652-1164

CH2MHILL®

NO.	DATE	DESCRIPTION	GM/SPEC	DWN	CHKD	SUPV	APVD BY
0	09/08/14	PRE-FINAL (90%) DESIGN		MD	KJ	VMB	VMB

REVISIONS

APPROVED BY
SO
SUPV VMB
DSGN KDD
DWN MD
CHKD KJ
OK VMB
DATE 6/30/14
SCALES AS NOTED

TOPOCK GROUNDWATER REMEDIATION PROJECT
INFLUENT TANK FARM
SECTIONS AND DETAILS

GAS TRANSMISSION & DISTRIBUTION
PACIFIC GAS AND ELECTRIC COMPANY
SAN FRANCISCO, CALIFORNIA

MICROFILM
BILL OF MATL
DWG LIST
SUPSDS
SUPSD BY
SHEET NO. of SHEETS
S-11-04
REV 0

FILENAME: E2-S-XXX-1103AD.dwg
PLOT DATE: $PLOTDATE PLOT TIME: $PLOTTIME
N1808

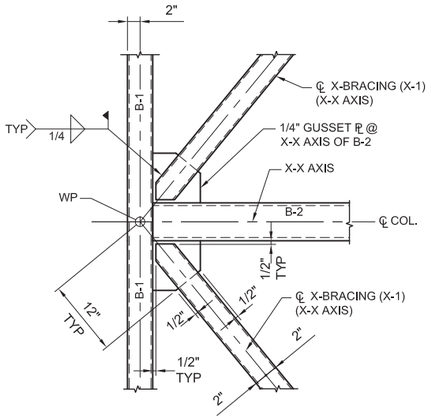

1 DETAIL
1" = 1'-0"
S-11-03

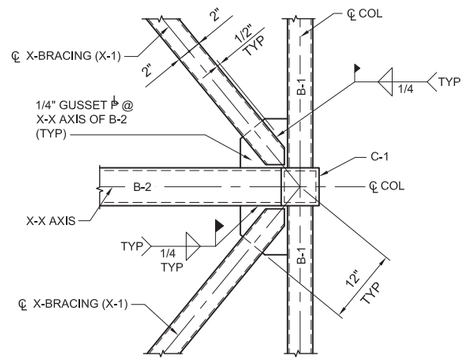

2 DETAIL
1" = 1'-0"
S-11-03

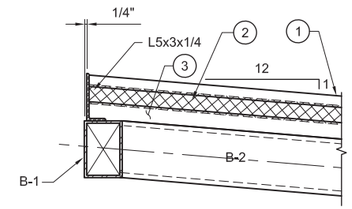

SECTION A-A

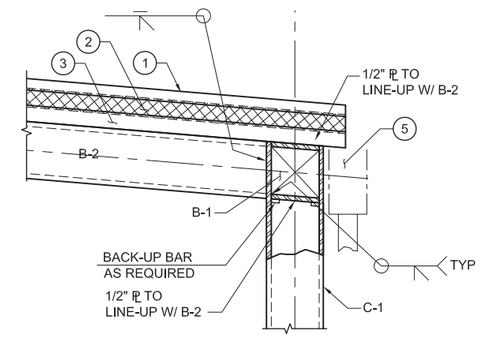

SECTION B--B

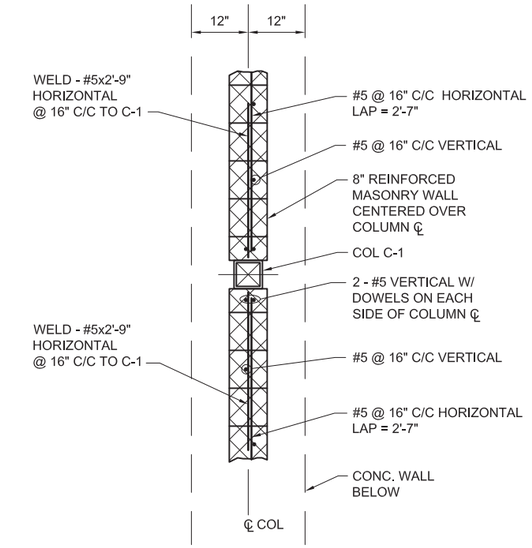

B SECTION
3/4" = 1'-0"
S-11-03

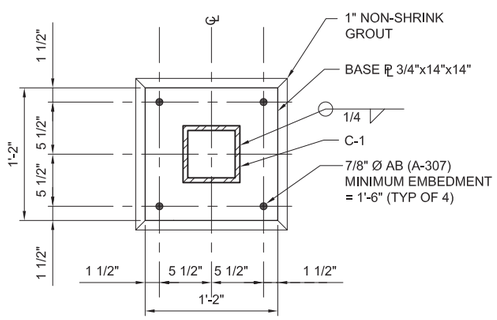

PLAN

MASONRY WALL NOT
SHOWN FOR CLARITY

5 DETAIL
1 1/2" = 1'-0"
S-11-02, S-11-03

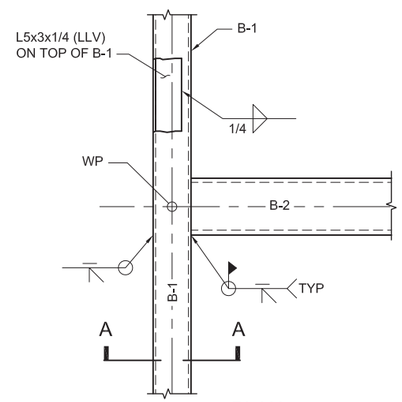

PLAN

3 DETAIL
1 1/2" = 1'-0"
S-11-03

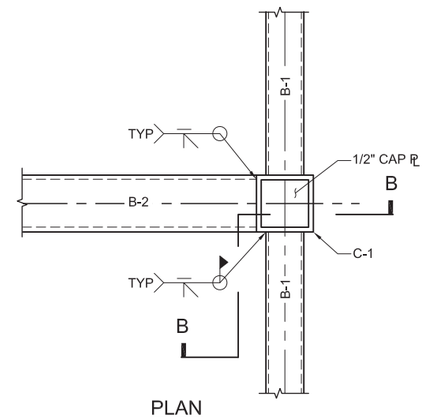

PLAN

4 DETAIL
1 1/2" = 1'-0"
S-11-03

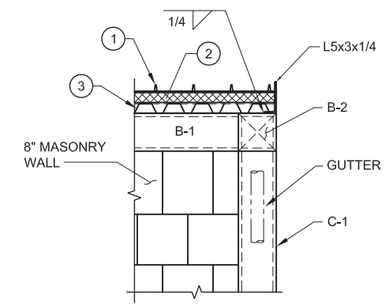

C SECTION
1" = 1'-0"
S-11-03

KEY NOTES

1. 1 1/2" STANDING SEAM METAL ROOF, SEE ARCHITECTURAL DRAWINGS.
2. 2" RIGID INSULATION.
3. 1 1/2" ROOF DECK, SEE DWG. S-00-01.
4. CLOSURE DETAIL, SEE ARCHITECTURAL DRAWINGS.
5. FOR GUTTER AND DOWNSPOUT, SEE ARCHITECTUTAL DRAWINGS.

DRAFT
NOT FOR
CONSTRUCTION

E2 Consulting Engineers, Inc.
1900 Powell Street, Ste. 250
Emeryville, CA 94608
(510) 652-1164

CH2MHILL®

NO.	DATE	DESCRIPTION	GM/SPEC	DWN	CHKD	SUPV	APVD BY
0	09/08/14	PRE-FINAL (90%) DESIGN		MD	KJ	VMB	VMB

REVISIONS

APPROVED BY
SO
SUPV VMB
DSGN KDD
DWN MD
CHKD KJ
OK VMB
DATE 6/30/14
SCALES AS NOTED

TOPOCK GROUNDWATER REMEDIATION PROJECT
INFLUENT TANK FARM CANOPY
SECTIONS AND DETAILS

GAS TRANSMISSION & DISTRIBUTION
PACIFIC GAS AND ELECTRIC COMPANY
SAN FRANCISCO, CALIFORNIA

MICROFILM
BILL OF MATL
DWG LIST
SUPSDS
SUPSD BY
SHEET NO. of SHEETS
S-11-05
REV 0

PLOT DATE: $PLOTDATE PLOT TIME: $PLOTTIME
FILENAME: E2-S-XXX-1102AD.dwg

N180B

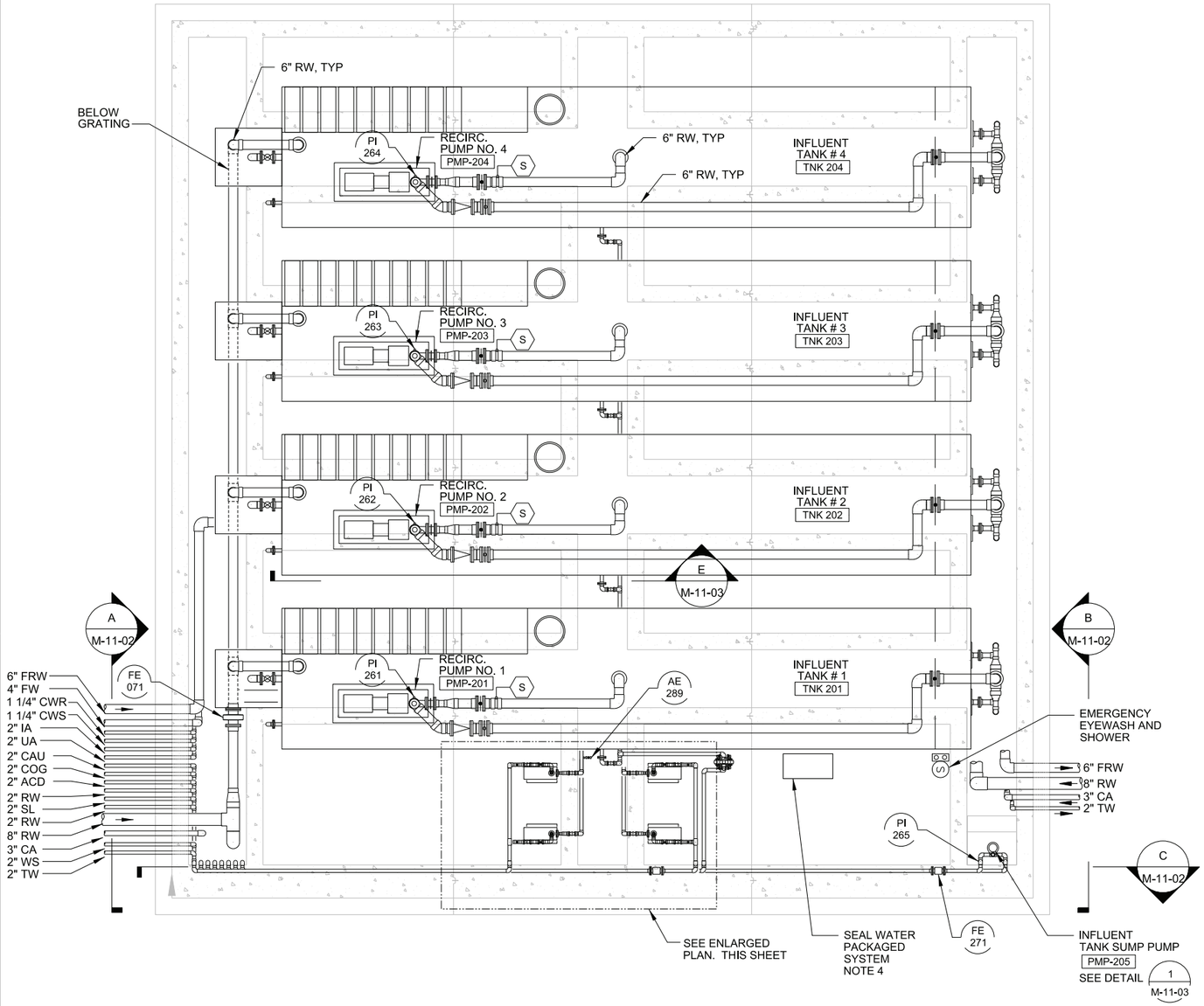

PLAN

1/4"=1'-0"

PIPE LEGEND

ACD	ACID (19% HCL)
CA	CARBON AMENDED GROUNDWATER
CAU	25% CAUSTIC
COG	COAGULANT
CWS/CWR	CHILLED WATER SUPPLY/RETURN
DR	DRAIN
FRW	FIRE WATER
FW	FRESHWATER
IA	INSTRUMENT AIR
LW	LAB WASTE
RW	REMEDY PRODUCED WATER
SL	SLURRY
TW	TREATED (FILTERED) REMEDY PRODUCED WATER
UA	UTILITY AIR
WS	WASTE STREAM

NOTES:

1. INVERT ELEVATION OF INLET AND OUTLET PIPING IS 624.5'
2. PROVIDE 4" FIBER AND 4" ELECTRICAL THROUGH THIS AREA.
3. SEE DRAWING S-11-01, 02, 03 FOR STRUCTURAL DETAILS AND C-10-02, C-11-01 FOR CIVIL DETAILS.
4. VARIABLE SPEED CONSTANT PRESSURE SYSTEM FOR SEAL WATER SUPPLY: ITT GOULDS - 1 EA AQUABOOST II 2AB2 PRESS. CONTROL SYSTEM, PRESSURE TANK, 1 EA 2MH1E5D0 HORZ. MULTI STAGE CENT. PUMP, 40 FT TRANSDUCER CABLE. STRAINER (SEE I-12-05) SHALL BE MUELLER 351M, NIBCO T-222-B OR EQUAL.
5. HOSE BIBB
6. PIPE SUPPORTS NOT SHOWN. CONTRACTOR TO SUPPORT PIPES IN ACCORDANCE WITH SPEC. 40 05 15.
7. ALL COMPRESSED AIR PIPING AND FITTINGS SHALL BE VIEGA PRO PRESS COPPER PIPE OR APPROVED EQUAL. WALL THICKNESS SHALL BE SUITABLE FOR COMPRESSED AIR AT 110 PSIG AND 130 F AMBIENT (TYPE K OR BETTER).
8. EQUIPMENT TAGS SHOWN ARE UNIQUELY IDENTIFIED WITH THE ADDITION OF THE LOCATION ID CODE OF "RTP01", BEFORE THE NUMERIC CODE.

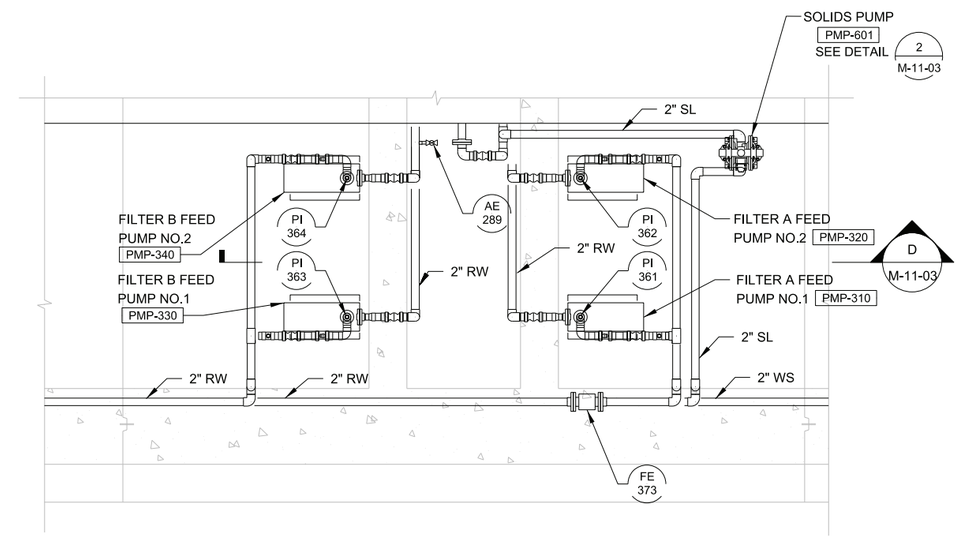

ENLARGED PLAN

1/4"=1'-0"

0 1 2 3

SCALE: 1/4"=1'

DRAFT NOT FOR CONSTRUCTION

CH2MHILL®

NO.	DATE	DESCRIPTION	GM/SPEC	DWN	CHKD	SUPV	APVD BY
0	09/2012	INTERMEDIATE (60%) DESIGN		GJ	JP	RH	CH
1	06/2014	PRE-FINAL (90%) DESIGN		DS	WF	JP	CH

REVISIONS

APPROVED BY: SO; SUPV; DSGN JP; DWN GJ; CHKD BF; OK JP; DATE; SCALES AS SHOWN

TOPOCK GROUNDWATER REMEDIATION PROJECT

INFLUENT TANK FARM PLAN

GAS TRANSMISSION & DISTRIBUTION
PACIFIC GAS AND ELECTRIC COMPANY
SAN FRANCISCO, CALIFORNIA

MICROFILM; BILL OF MATL; DWG LIST; SUPSDS; SUPSD BY

SHEET NO. M-11-01 of SHEETS; REV

FILENAME: CH-M-XXX-1101AD.dwg

PLOT DATE: 2014/09/04 PLOT TIME: 10:16:37 AM

N1808

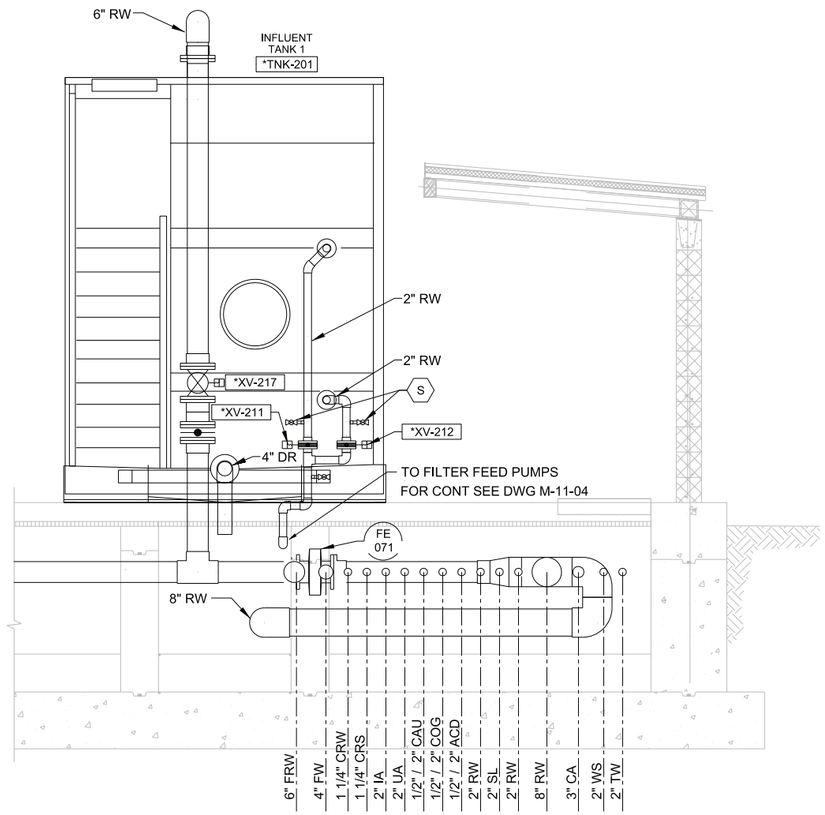

A SECTION
1/2" = 1'-0"
M-11-01

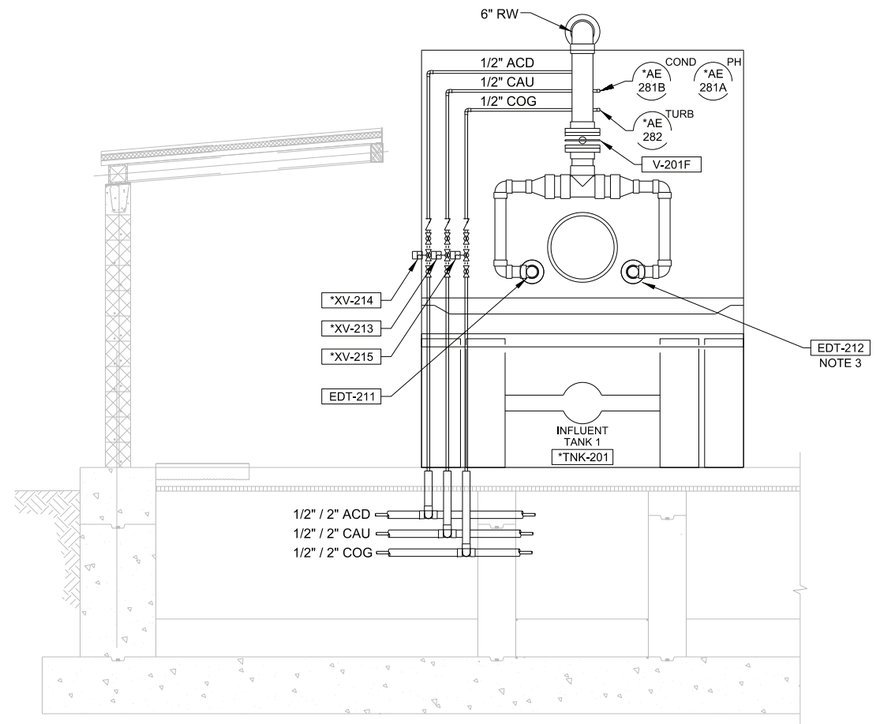

B SECTION
1/2" = 1'-0"
M-11-01

NOTES :

1. PIPE SUPPORTS NOT SHOWN. CONTRACTOR TO SUPPORT PIPES IN ACCORDANCE WITH SPEC. 40 05 15.
2. FOR TNK-202, TNK-203, TNK-204, PIPING SHOWN ENTERING THE TANK IS TYPICAL.
3. EDUCTORS SHALL BE POSITIONED EQUIDISTANT FROM EACH OTHER AND TANK SIDES. VERTICAL POSITION SHALL BE SHOWN ON APPROVED EDUCTOR SHOP DRAWINGS.
4. ROUTE INSTRUMENT AIR TO VALVES AND EQUIPMENT AS REQUIRED. ALL COMPRESSED AIR PIPING AND FITTINGS SHALL BE VIEGA PRO PRESS COPPER PIPE OR APPROVED EQUAL. WALL THICKNESS SHALL BE SUITABLE FOR COMPRESSED AIR AT 110 PSIG AND 130 F AMBIENT (TYPE K OR BETTER).
5. EQUIPMENT TAGS SHOWN ARE UNIQUELY IDENTIFIED WITH THE ADDITION OF THE LOCATION ID CODE OF "RTP01", BEFORE THE NUMERIC CODE.

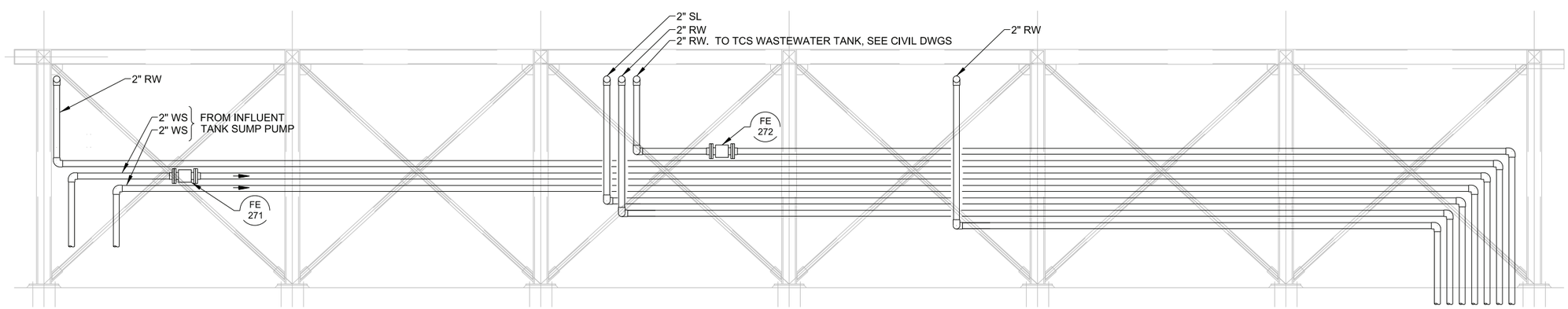

C SECTION
1/2" = 1'-0"
M-11-01

0 1 2 3
SCALE: 1/2"=1'

NOT FOR CONSTRUCTION

CH2MHILL®

NO.	DATE	DESCRIPTION	GM/SPEC	DWN	CHKD	SUPV	APVD BY
0	09/2014	PRE-FINAL (90%) DESIGN		DS	WF	JP	CH

REVISIONS

APPROVED BY: SO; SUPV; DSGN JP; DWN DS; CHKD BF; OK JP; DATE; SCALES AS SHOWN

TOPOCK GROUNDWATER REMEDIATION PROJECT
INFLUENT TANK FARM
SECTIONS AND DETAILS 1

GAS TRANSMISSION & DISTRIBUTION
PACIFIC GAS AND ELECTRIC COMPANY
SAN FRANCISCO, CALIFORNIA

MICROFILM
BILL OF MATL
DWG LIST
SUPSDS
SUPSD BY
SHEET NO. of SHEETS
M-11-02
REV

PLOT DATE: 2014/09/04 PLOT TIME: 10:18:10 AM
FILENAME: CH-M-XXX-1102AD.dwg

N1808

NOTES:

1. PIPE SUPPORTS NOT SHOWN. CONTRACTOR TO SUPPORT PIPES IN ACCORDANCE WITH SPEC. 40 05 15.
2. EQUIPMENT TAGS SHOWN ARE UNIQUELY IDENTIFIED WITH THE ADDITION OF THE LOCATION ID CODE OF "RTP01", BEFORE THE NUMERIC CODE.

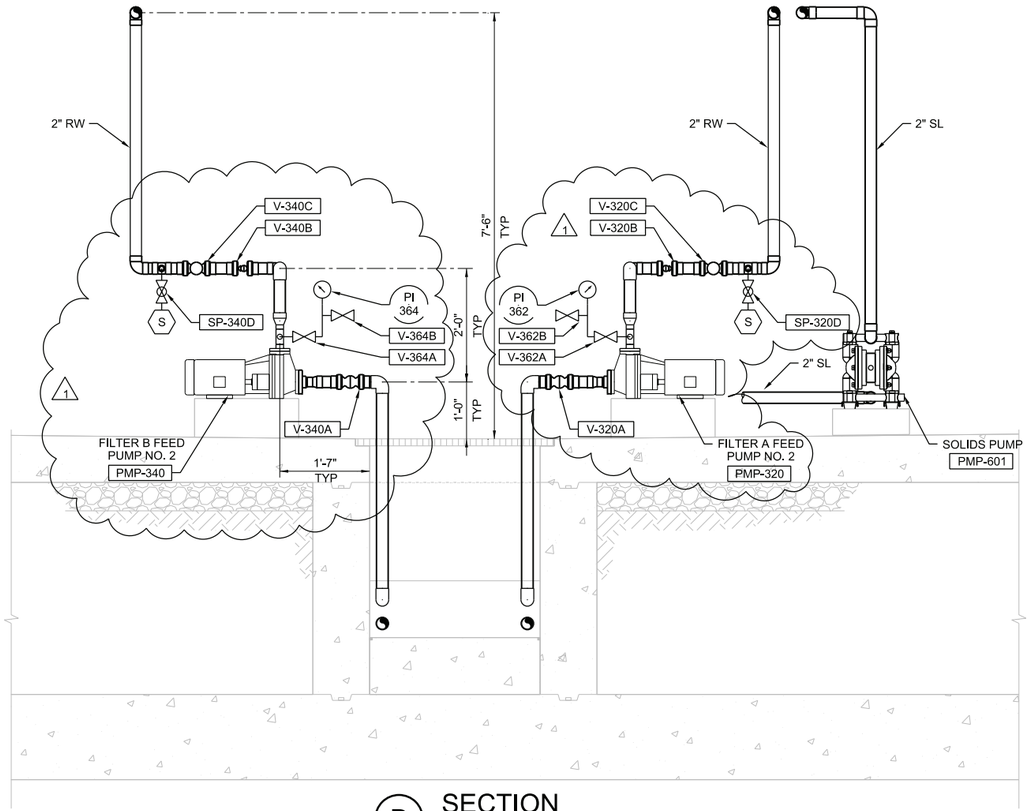

D SECTION
3/4"=1'-0"
M-11-01

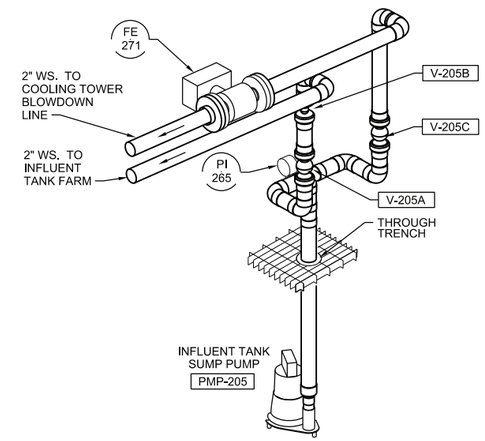

1 SUMP PUMP ISOMETRIC
NTS
M-11-01

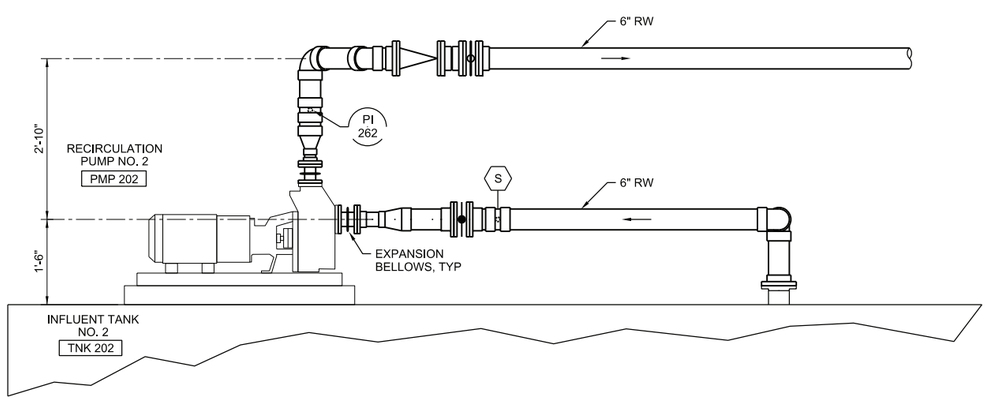

E SECTION
NTS
M-11-01

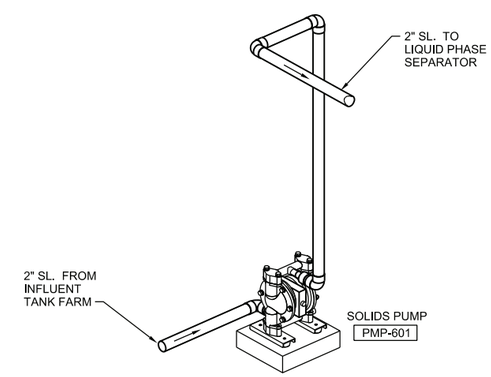

2 SOLIDS PUMP ISOMETRIC
NTS
M-11-01

0 1 2 3
SCALE: 3/4"=1'

DRAFT
NOT FOR
CONSTRUCTION

AS SHOWN

CH2MHILL®

NO.	DATE	DESCRIPTION	GM/SPEC	DWN	CHKD	SUPV	APVD BY
0	09/2014	PRE-FINAL (90%) DESIGN		DS	WF	JP	CH

REVISIONS

APPROVED BY
SO
SUPV
DSGN JP
DWN DS
CHKD BF
OK JP
DATE 9/08/14
SCALES

TOPOCK GROUNDWATER REMEDIATION PROJECT
INFLUENT TANK FARM
SECTIONS AND DETAILS 2

GAS TRANSMISSION & DISTRIBUTION
PACIFIC GAS AND ELECTRIC COMPANY
SAN FRANCISCO, CALIFORNIA

MICROFILM
BILL OF MATL
DWG LIST
SUPSDS
SUPSD BY
SHEET NO. M-11-03 of SHEETS
REV 1

FILENAME: CH-M-XXX-1103AD.dgn
PLOT DATE: 2014/09/04 PLOT TIME: 10:20:03 AM
FILENAME: ___DGN __-__-04 ___
N1808

NOTES:

1. PIPE SUPPORTS NOT SHOWN. CONTRACTOR TO SUPPORT PIPES IN ACCORDANCE WITH SPEC. 40 05 15.
2. EQUIPMENT TAGS SHOWN ARE UNIQUELY IDENTIFIED WITH THE ADDITION OF THE LOCATION ID CODE OF "RTP01", BEFORE THE NUMERIC CODE.

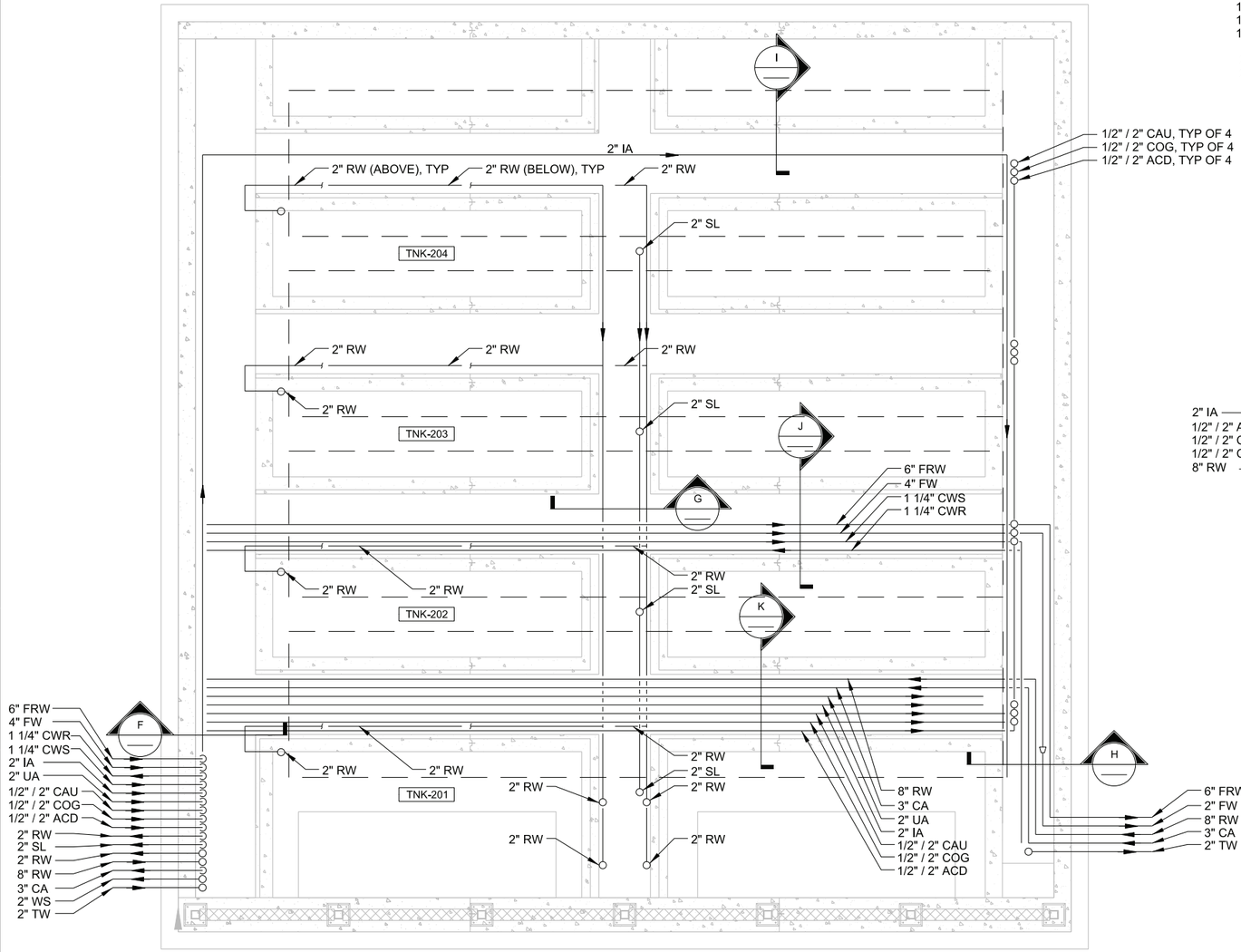

TRENCH PIPING SCHEMATIC

NTS

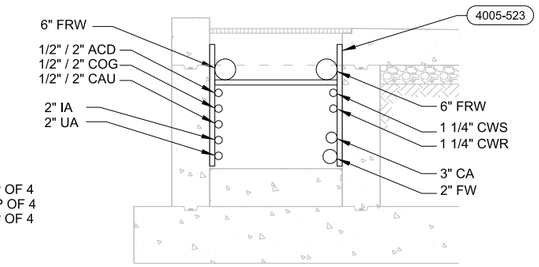

F SECTION
1/2"=1'-0"

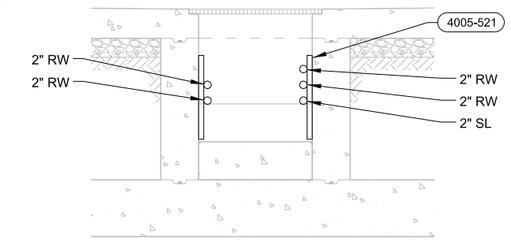

G SECTION
1/2"=1'-0"

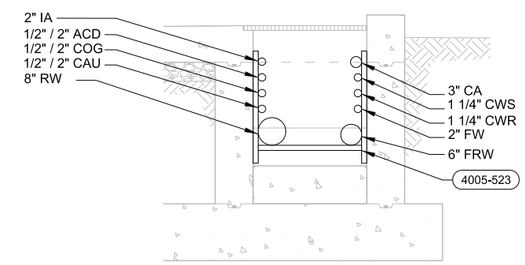

H SECTION
1/2"=1'-0"

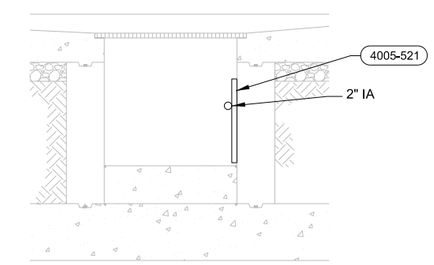

I SECTION
1/2"=1'-0"

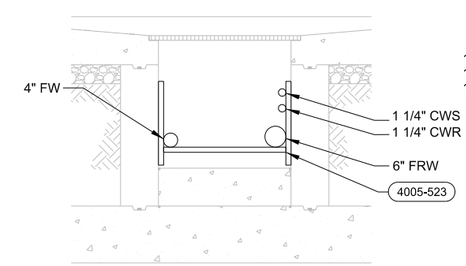

J SECTION
1/2"=1'-0"

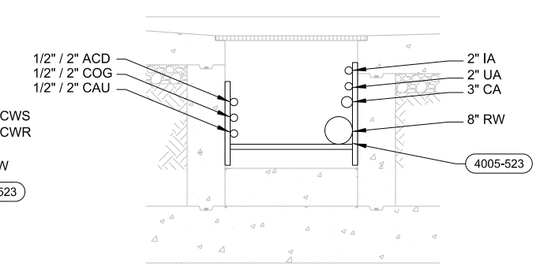

K SECTION
1/2"=1'-0"

0 1 2 3
SCALE: 1/2"=1'

DRAFT
NOT FOR
CONSTRUCTION

CH2MHILL®

NO.	DATE	DESCRIPTION	GM/SPEC	DWN	CHKD	SUPV	APVD BY
0	09/2014	PRE-FINAL (90%) DESIGN		DC	WF	JP	CH

REVISIONS

APPROVED BY: SO
SUPV
DSGN JP
DWN DS
CHKD BF
OK JP
DATE
SCALES AS SHOWN

TOPOCK GROUNDWATER REMEDIATION PROJECT
INFLUENT TANK FARM
SECTIONS AND DETAILS 3

GAS TRANSMISSION & DISTRIBUTION
PACIFIC GAS AND ELECTRIC COMPANY
SAN FRANCISCO, CALIFORNIA

MICROFILM
BILL OF MATL
DWG LIST
SUPSDS
SUPSD BY
SHEET NO. M-11-04 of SHEETS
REV

FILENAME: CH-M-XXX-1104AD.dwg
PLOT DATE: 2014/09/04 PLOT TIME: 10:23:09 AM

N1808

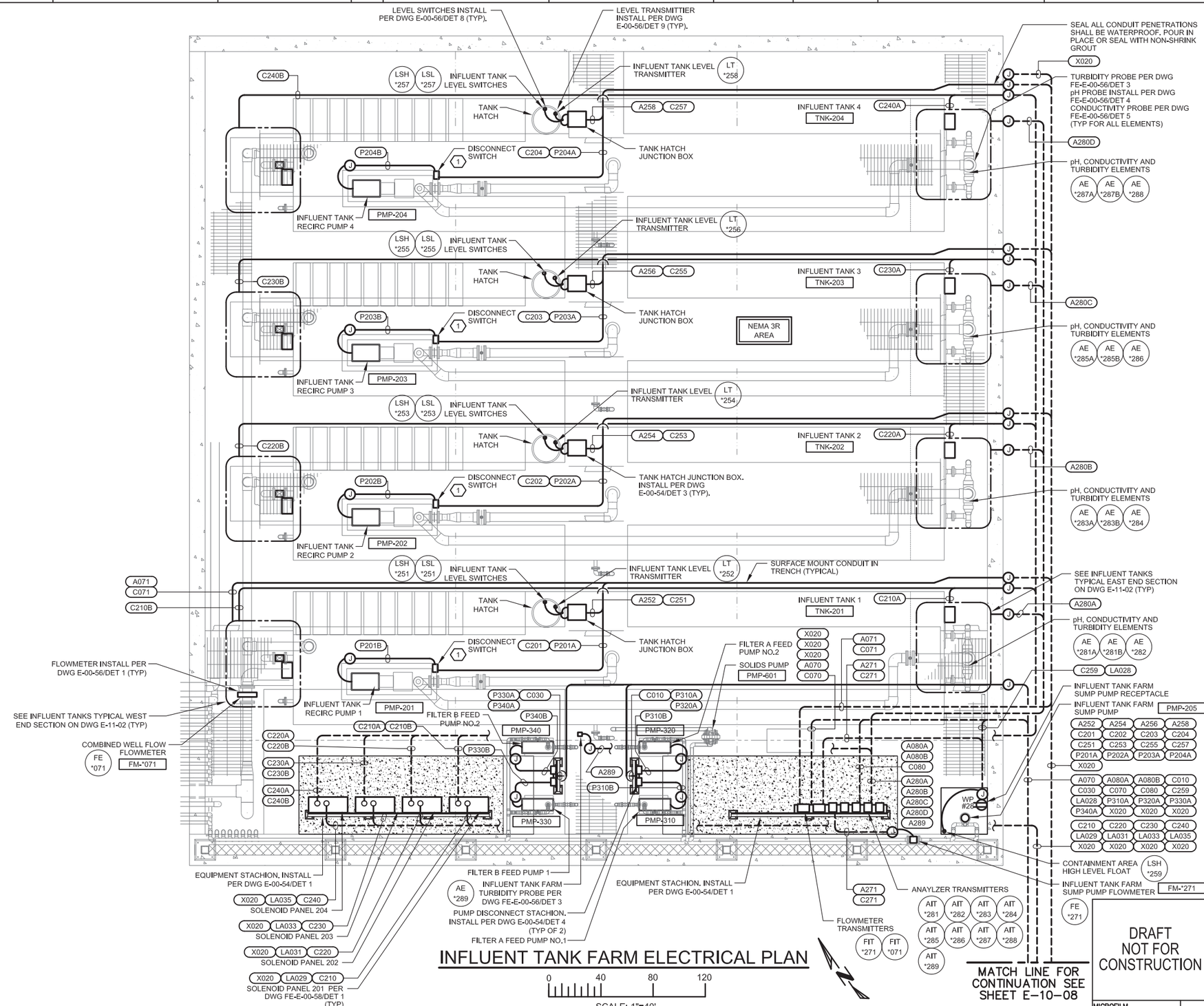

INFLUENT TANK FARM ELECTRICAL PLAN

DRAWING REFERENCED NOTES:

1. SECURE PUMP DISCONNECT SWITCH TO PUMP BASE WITH STAINLESS STEEL UNISTRUT. MOUNT DISCONNECT SWITCH AT 18". TYPICAL OF 4.
2. RUN AIR LINES AND CONTROL CABLES (4 # 14 CABLE) FROM SOLENOID PANEL TO EACH PNEUMATIC VALVE PER P&ID.

ELECTRICAL PLAN NOTES:

1. SEE ELECTRICAL PLAN NOTES ON DRAWING E-00-02.

FRISCH ENGINEERING, INC.
CONSULTING ELECTRICAL ENGINEERS
13405 FOLSOM BLVD, UNIT 600
FOLSOM, CA 95630
PH 916 353 1025
WWW.FRISCHENGINEERING.COM

CH2MHILL®

NO.	DATE	DESCRIPTION	GM/SPEC	DWN	CHKD	SUPV	APVD BY
0	9/8/14	PRE-FINAL (90%) DESIGN		MBY			TPF

REVISIONS

APPROVED BY: TPF

SO	
SUPV	TPF
DSGN	MBY
DWN	MBY, NC
CHKD	MF
OK	TPF
DATE	
SCALES	N/A

TOPOCK GROUNDWATER REMEDIATION PROJECT
INFLUENT TANK FARM ELECTRICAL PLAN
GAS TRANSMISSION & DISTRIBUTION
PACIFIC GAS AND ELECTRIC COMPANY
SAN FRANCISCO, CALIFORNIA

DRAFT NOT FOR CONSTRUCTION

MICROFILM
BILL OF MATL
DWG LIST
SUPSDS
SUPSD BY
SHEET NO. of SHEETS: E-11-01
REV: 0

PLOT DATE: Aug 25, 2014 PLOT TIME: 3:23:54pm
FILENAME: FE-E-xxx-1101AD.dwg

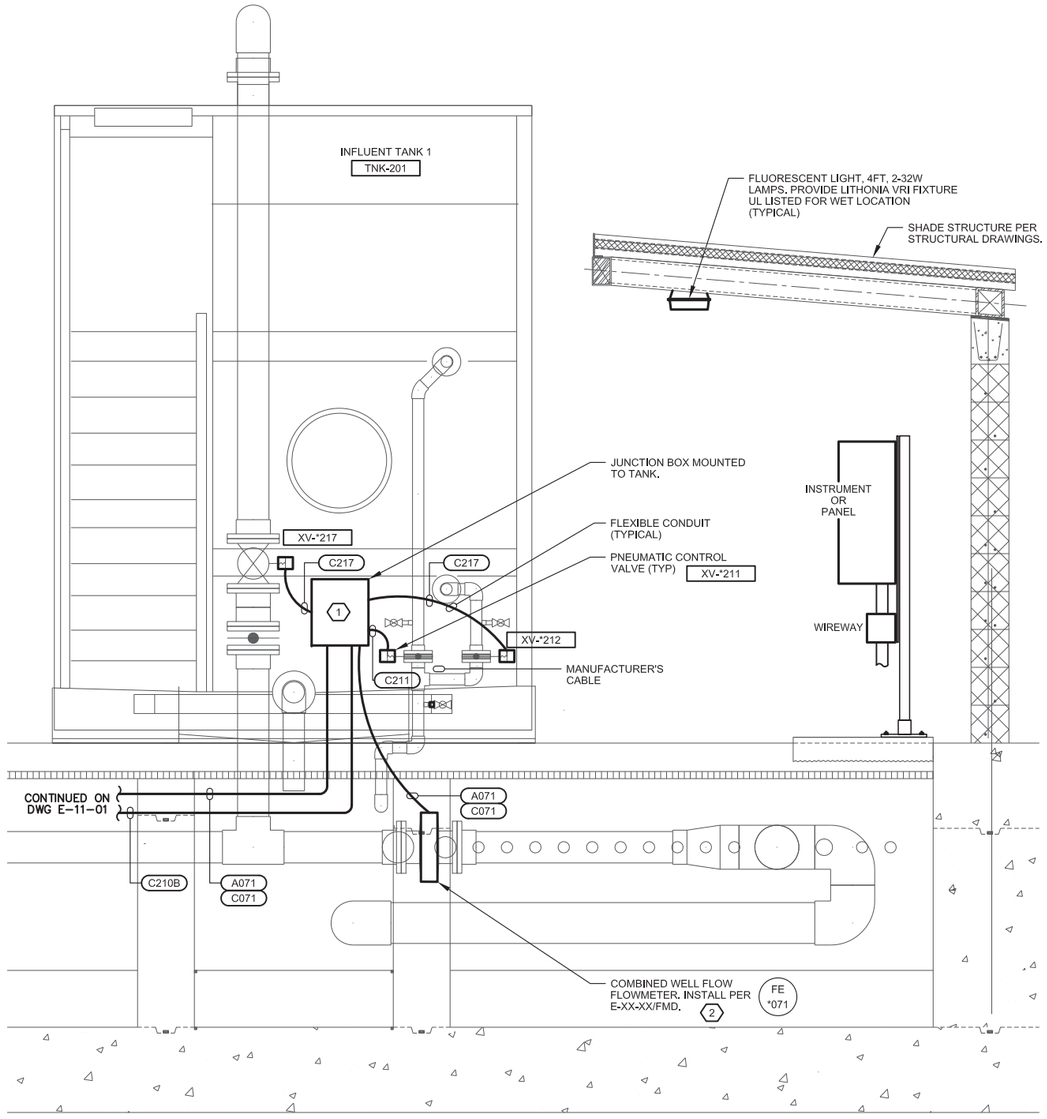

INFLUENT TANK 1 WEST END SECTION

SCALE: 3/4" = 1'
(SIMILAR FOR ALL INFLUENT TANKS)

DRAWING REFERENCED NOTES:

NOTES: (1) 14"W X 12"H X 6"D, NEMA 4X STAINLESS STEEL JUNCTION/SPLICE BOX. JUNCTION BOX SHALL BE HOFFMAN CHNFSS OR EQUAL. USE ALL STAINLESS STEEL MOUNTING HARDWARE.

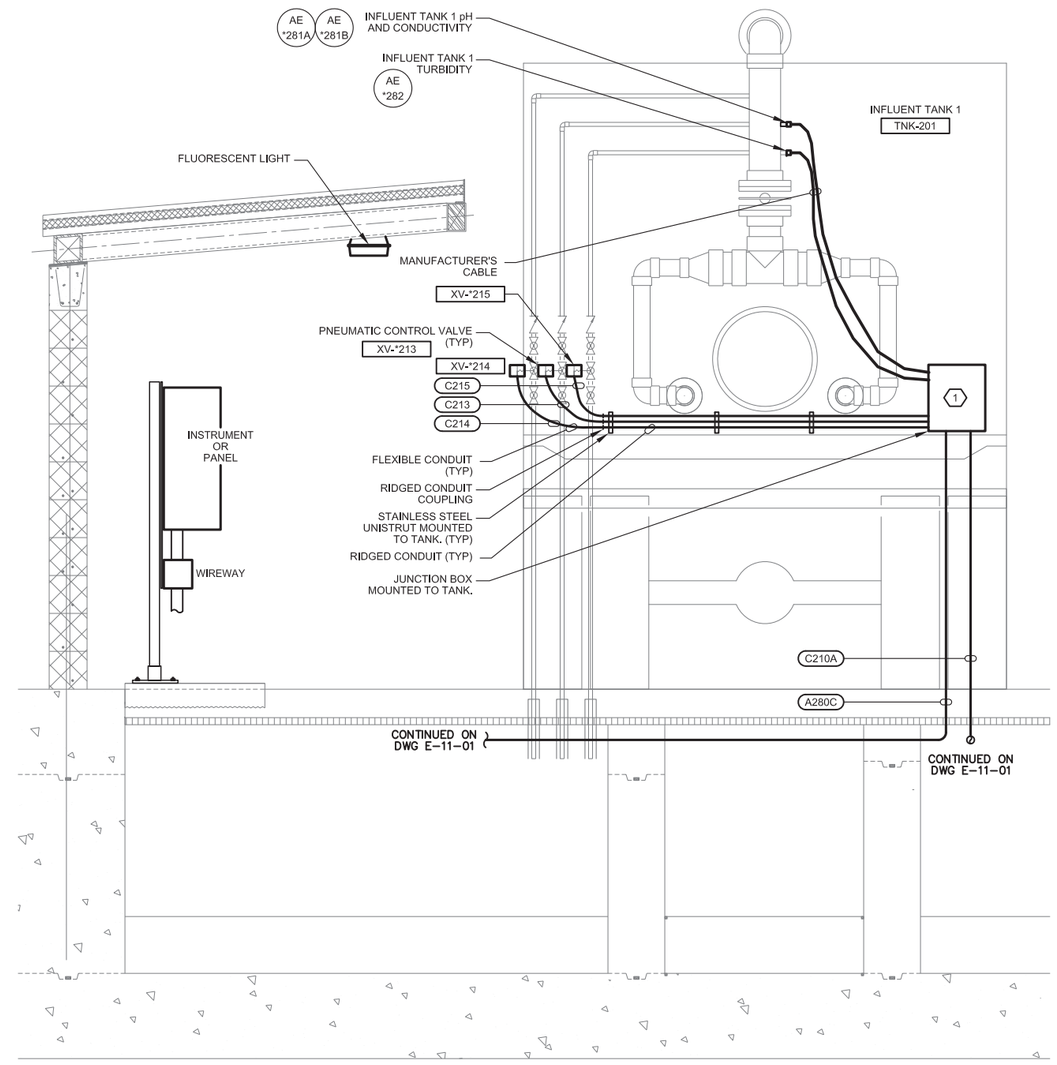

INFLUENT TANK 1 EAST END SECTION

SCALE: 3/4" = 1'
(SIMILAR FOR ALL INFLUENT TANKS)

DRAWING REFERENCED NOTES:

NOTES: (1) 14"W X 12"H X 6"D, NEMA 4X STAINLESS STEEL JUNCTION/SPLICE BOX. JUNCTION BOX SHALL BE HOFFMAN CHNFSS OR EQUAL. USE ALL STAINLESS STEEL MOUNTING HARDWARE.

DRAFT
NOT FOR
CONSTRUCTION

FRISCH ENGINEERING, INC.
CONSULTING ELECTRICAL ENGINEERS
13405 FOLSOM BLVD, UNIT 600
FOLSOM, CA 95630
PH 916 353 1025
WWW.FRISCHENGINEERING.COM

CH2MHILL®

NO.	DATE	DESCRIPTION	GM/SPEC	DWN	CHKD	SUPV	APVD BY
0	9/8/14	PRE-FINAL (90%) DESIGN		MBY			TPF

REVISIONS

APPROVED BY: TPF

SO	
SUPV	TPF
DSGN	MBY
DWN	MBY, NC
CHKD	MF
OK	TPF
DATE	
SCALES	N/A

TOPOCK GROUNDWATER REMEDIATION PROJECT
INFLUENT TANK 1
SECTIONS ELECTRICAL PLAN

GAS TRANSMISSION & DISTRIBUTION
PACIFIC GAS AND ELECTRIC COMPANY
SAN FRANCISCO, CALIFORNIA

MICROFILM
BILL OF MATL
DWG LIST
SUPSDS
SUPSD BY
SHEET NO. of SHEETS
E-11-02
REV 0

FILENAME: FE-E-xxx-1101AD.dwg
PLOT DATE: Aug 25, 2014 PLOT TIME: 3:23:46pm

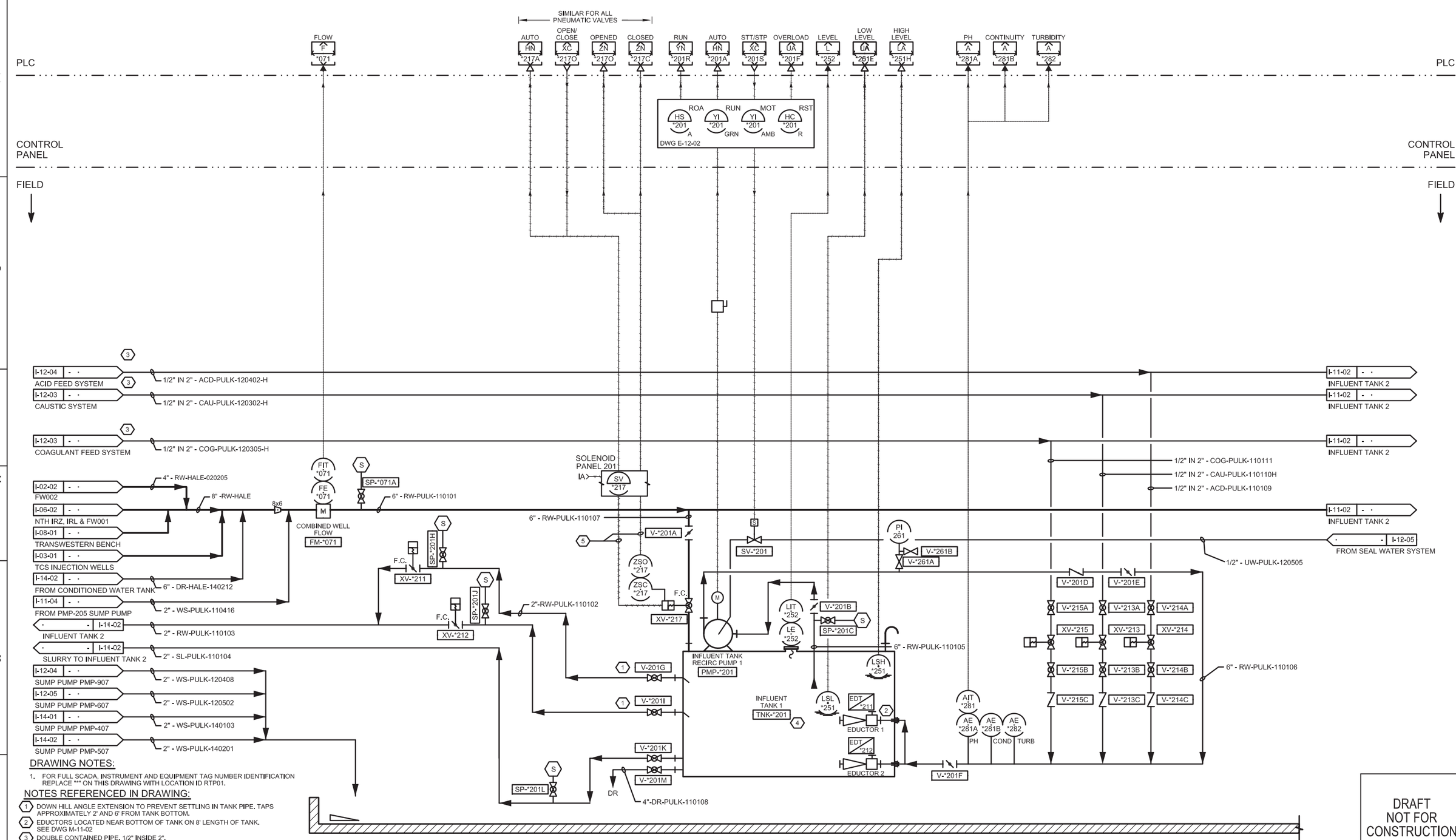

DRAWING NOTES:

1. FOR FULL SCADA, INSTRUMENT AND EQUIPMENT TAG NUMBER IDENTIFICATION REPLACE "*" ON THIS DRAWING WITH LOCATION ID RTP01.

NOTES REFERENCED IN DRAWING:

1. DOWN HILL ANGLE EXTENSION TO PREVENT SETTLING IN TANK PIPE. TAPS APPROXIMATELY 2' AND 6' FROM TANK BOTTOM.
2. EDUCTORS LOCATED NEAR BOTTOM OF TANK ON 8' LENGTH OF TANK. SEE DWG M-11-02
3. DOUBLE CONTAINED PIPE. 1/2" INSIDE 2".
4. SEE SPECIFICATION SECTION 33 16 13.14 AND DRAWING M-11-02.
5. AIR TUBING AND CONTROL WIRES TO SOLENOID PANEL 201, TYPICAL FOR ALL PNEUMATIC VALVES.

DRAFT NOT FOR CONSTRUCTION

FRISCH ENGINEERING, INC.
CONSULTING ELECTRICAL ENGINEERS
13405 FOLSOM BLVD, UNIT 600
FOLSOM, CA 95630
PH 916 353 1025
WWW.FRISCHENGINEERING.COM

CH2MHILL®

NO.	DATE	DESCRIPTION	GM/SPEC	DWN	CHKD	SUPV	APVD BY
1	9/8/14	PRE-FINAL (90%) DESIGN		MBY			TPF
0	4/5/13	INTERMEDIATE (60%) DESIGN		MBY			TPF

REVISIONS

APPROVED BY: TPF
SO
SUPV TPF
DSGN MBY
DWN MBY, NC
CHKD MF
OK TPF
DATE
SCALES N/A

TOPOCK GROUNDWATER REMEDIATION PROJECT
P&ID
INFLUENT TANK 1
GAS TRANSMISSION & DISTRIBUTION
PACIFIC GAS AND ELECTRIC COMPANY
SAN FRANCISCO, CALIFORNIA

MICROFILM
BILL OF MATL
DWG LIST
SUPSDS
SUPSD BY
SHEET NO. of SHEETS
I-11-01
REV 1

PLOT DATE: Aug 27, 2014 PLOT TIME: 12:03:18pm
FILENAME: FE-XXX-1101AD.dwg

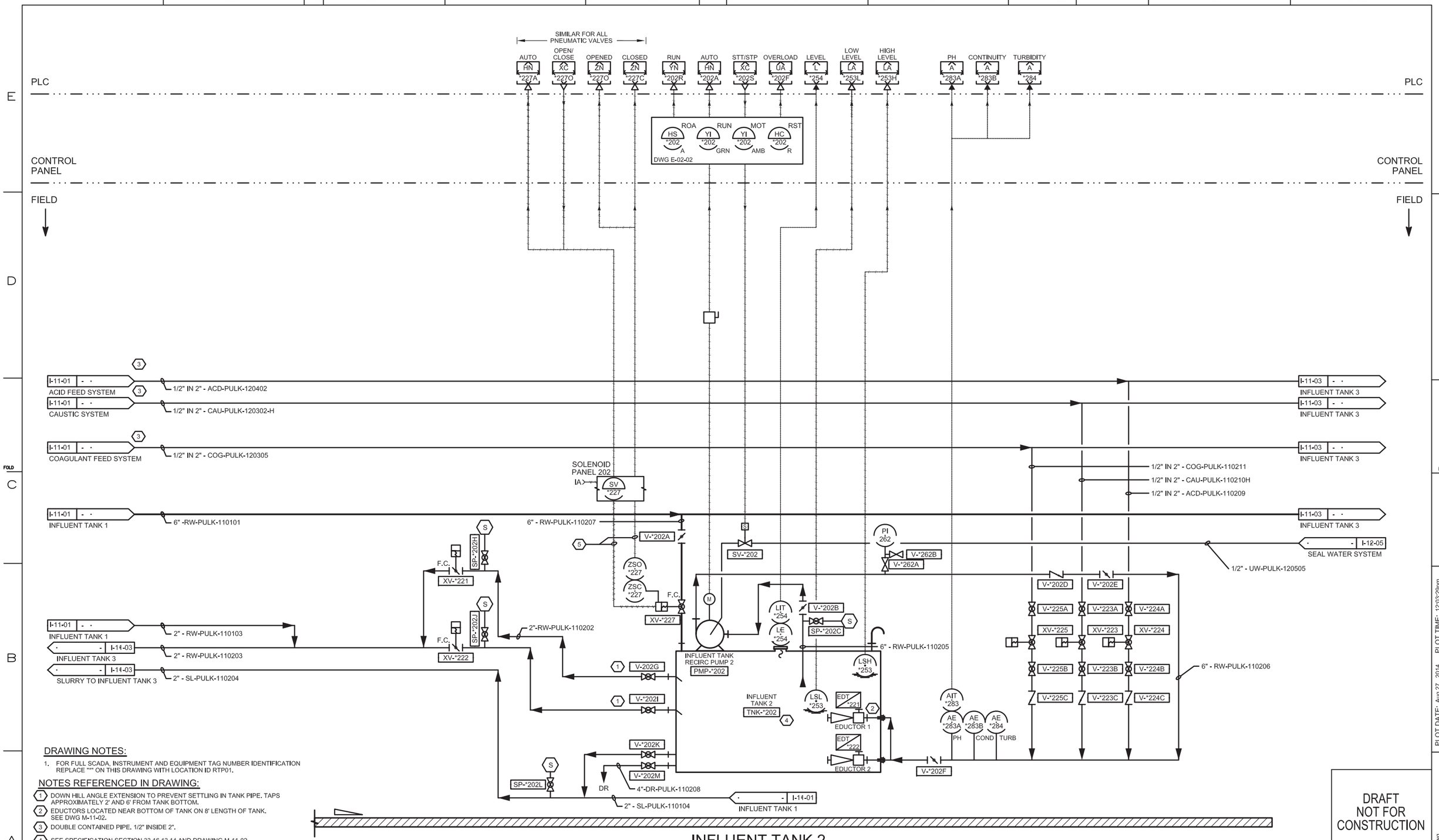

DRAWING NOTES:

1. FOR FULL SCADA, INSTRUMENT AND EQUIPMENT TAG NUMBER IDENTIFICATION REPLACE "*" ON THIS DRAWING WITH LOCATION ID RTP01.

NOTES REFERENCED IN DRAWING:

1. DOWN HILL ANGLE EXTENSION TO PREVENT SETTLING IN TANK PIPE. TAPS APPROXIMATELY 2' AND 6' FROM TANK BOTTOM.
2. EDUCTORS LOCATED NEAR BOTTOM OF TANK ON 8' LENGTH OF TANK. SEE DWG M-11-02.
3. DOUBLE CONTAINED PIPE. 1/2" INSIDE 2".
4. SEE SPECIFICATION SECTION 33 16 13.14 AND DRAWING M-11-02.
5. AIR TUBING AND CONTROL WIRES TO SOLENOID PANEL 202, TYPICAL FOR ALL PNEUMATIC VALVES.

DRAFT NOT FOR CONSTRUCTION

FRISCH ENGINEERING, INC.
CONSULTING ELECTRICAL ENGINEERS
13405 FOLSOM BLVD, UNIT 600
FOLSOM, CA 95630
PH 916 353 1025
WWW.FRISCHENGINEERING.COM

CH2MHILL®

NO.	DATE	DESCRIPTION	GM/SPEC	DWN	CHKD	SUPV	APVD BY
1	9/8/14	PRE-FINAL (90%) DESIGN		MBY			TPF
0	4/5/13	INTERMEDIATE (60%) DESIGN		MBY			TPF

REVISIONS

APPROVED BY: TPF

SO
SUPV TPF
DSGN MBY
DWN MBY, NC
CHKD MF
OK TPF
DATE
SCALES N/A

TOPOCK GROUNDWATER REMEDIATION PROJECT
P&ID
INFLUENT TANK 2

GAS TRANSMISSION & DISTRIBUTION

PACIFIC GAS AND ELECTRIC COMPANY
SAN FRANCISCO, CALIFORNIA

MICROFILM
BILL OF MATL
DWG LIST
SUPSDS
SUPSD BY
SHEET NO. of SHEETS: I-11-02
REV: 1

PLOT DATE: Aug 27, 2014 PLOT TIME: 12:03:29pm

FILENAME: FE-XXX-1102AD.dwg

N1808

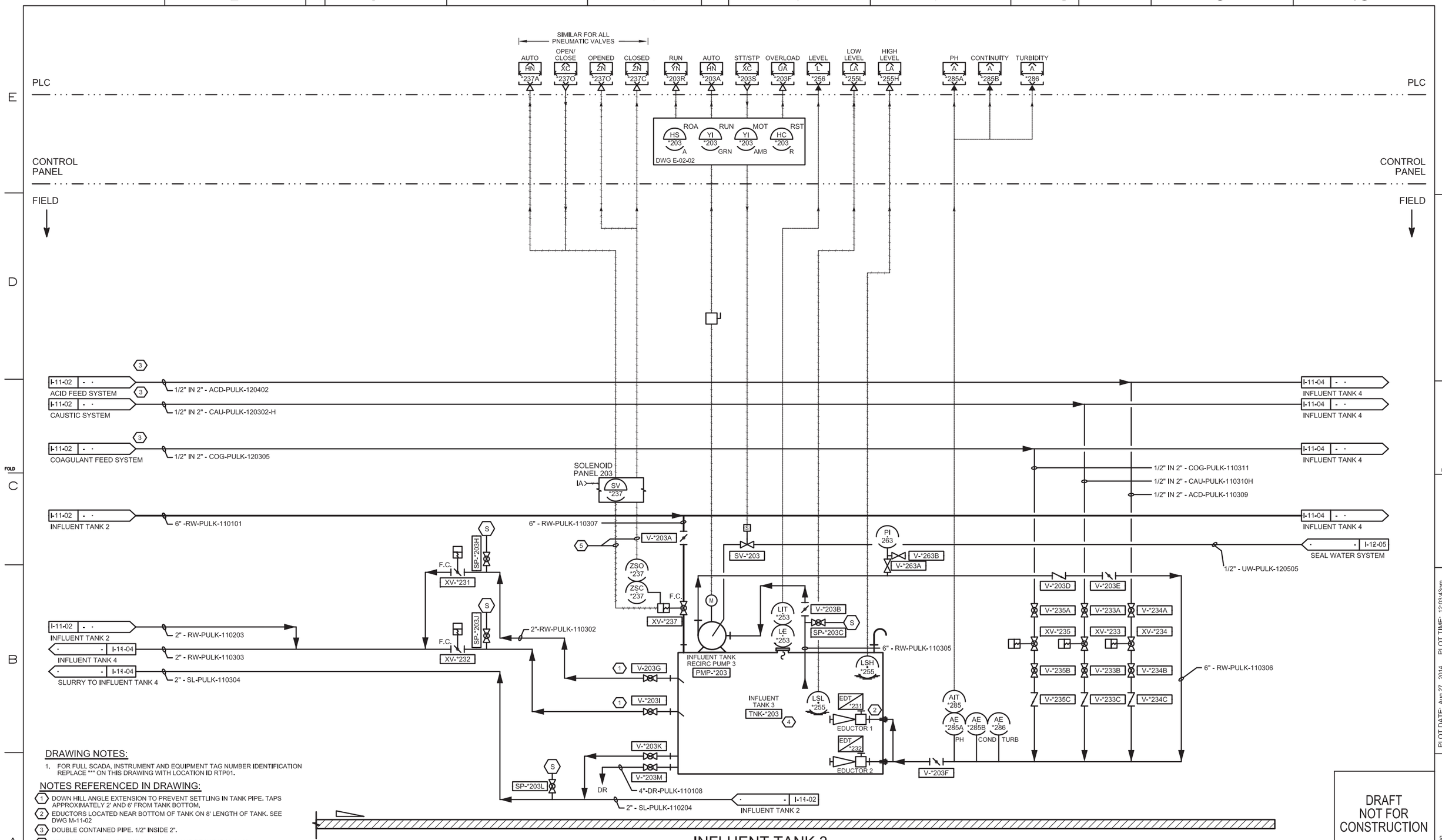

DRAWING NOTES:

1. FOR FULL SCADA, INSTRUMENT AND EQUIPMENT TAG NUMBER IDENTIFICATION REPLACE "*" ON THIS DRAWING WITH LOCATION ID RTP01.

NOTES REFERENCED IN DRAWING:

1. DOWN HILL ANGLE EXTENSION TO PREVENT SETTLING IN TANK PIPE. TAPS APPROXIMATELY 2' AND 6' FROM TANK BOTTOM.
2. EDUCTORS LOCATED NEAR BOTTOM OF TANK ON 8' LENGTH OF TANK. SEE DWG M-11-02
3. DOUBLE CONTAINED PIPE. 1/2" INSIDE 2".
4. SEE SPECIFICATION SECTION 33 16 13.14 AND DRAWING M-11-02.
5. AIR TUBING AND CONTROL WIRES TO SOLENOID PANEL 203, TYPICAL FOR ALL PNEUMATIC VALVES.

DRAFT NOT FOR CONSTRUCTION

FRISCH ENGINEERING, INC.
CONSULTING ELECTRICAL ENGINEERS
13405 FOLSOM BLVD, UNIT 600
FOLSOM, CA 95630
PH 916 353 1025
WWW.FRISCHENGINEERING.COM

CH2MHILL®

NO.	DATE	DESCRIPTION	GM/SPEC	DWN	CHKD	SUPV	APVD BY
1	9/8/14	PRE-FINAL (90%) DESIGN		MBY			TPF
0	4/5/13	INTERMEDIATE (60%) DESIGN		MBY			TPF

REVISIONS

APPROVED BY: TPF

SO
SUPV TPF
DSGN MBY
DWN MBY, NC
CHKD MF
OK TPF
DATE
SCALES N/A

TOPOCK GROUNDWATER REMEDIATION PROJECT
P&ID
INFLUENT TANK 3

GAS TRANSMISSION & DISTRIBUTION
PACIFIC GAS AND ELECTRIC COMPANY
SAN FRANCISCO, CALIFORNIA

MICROFILM
BILL OF MATL
DWG LIST
SUPSDS
SUPSD BY
SHEET NO. of SHEETS: I-11-03
REV: 1

FILENAME: FE-XXX-1103AD.dwg
PLOT DATE: Aug 27, 2014
PLOT TIME: 12:03:43pm
N1808

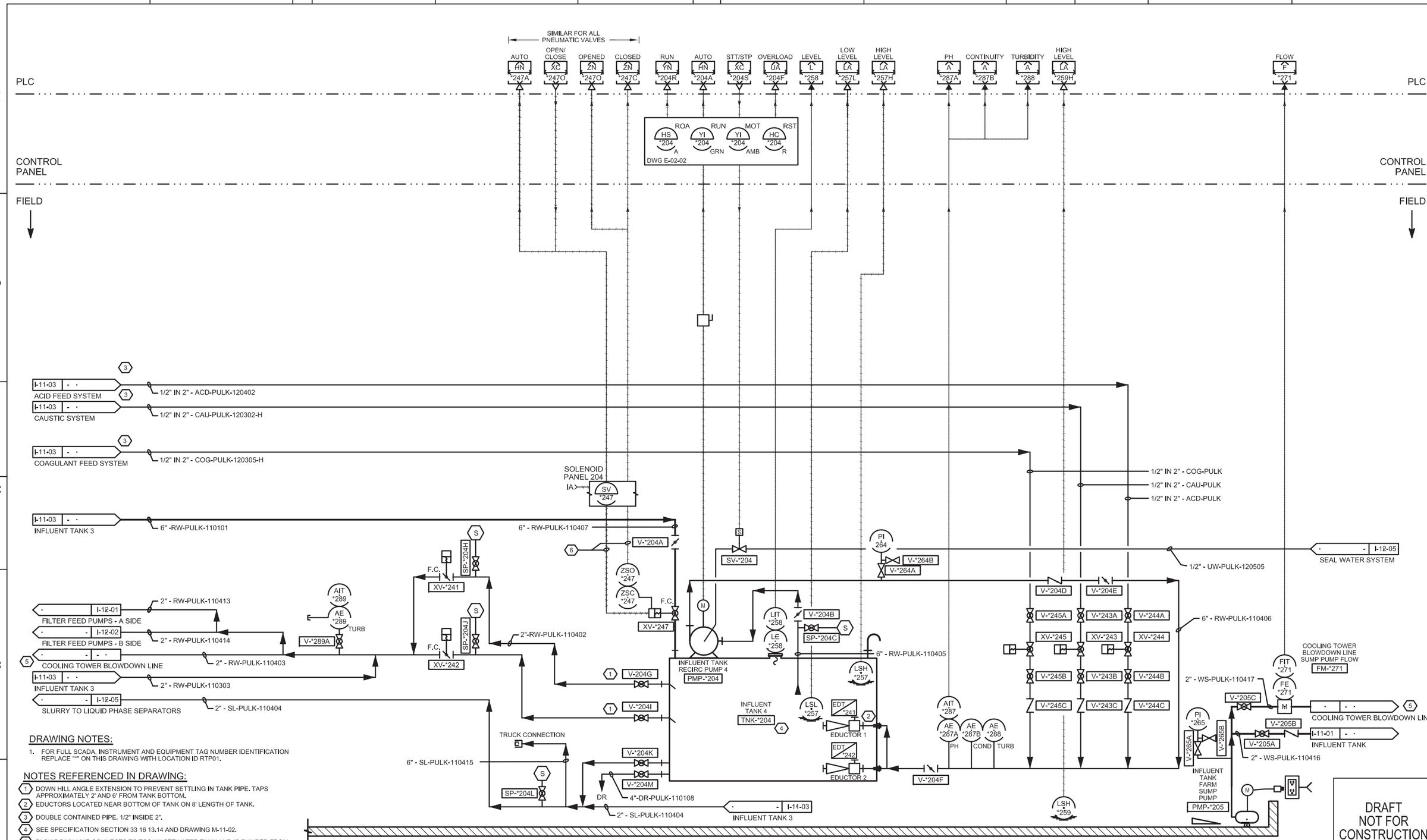

DRAWING NOTES:

1. FOR FULL SCADA, INSTRUMENT AND EQUIPMENT TAG NUMBER IDENTIFICATION REPLACE "*" ON THIS DRAWING WITH LOCATION ID RTP01.

NOTES REFERENCED IN DRAWING:

1. DOWN HILL ANGLE EXTENSION TO PREVENT SETTLING IN TANK PIPE. TAPS APPROXIMATELY 2' AND 6' FROM TANK BOTTOM.
2. EDUCTORS LOCATED NEAR BOTTOM OF TANK ON 8' LENGTH OF TANK.
3. DOUBLE CONTAINED PIPE. 1/2" INSIDE 2".
4. SEE SPECIFICATION SECTION 33 16 13.14 AND DRAWING M-11-02.
5. BLOWDOWN LINE CONNECTS TO TCS WASTEWATER TANK AND IS PUMPED FROM THERE TO EVAPORATION PONDS.
6. AIR TUBING AND CONTROL WIRES TO SOLENOID PANEL 204, TYPICAL FOR ALL PNEUMATIC VALVES.

DRAFT NOT FOR CONSTRUCTION

FRISCH ENGINEERING, INC.
CONSULTING ELECTRICAL ENGINEERS
13405 FOLSOM BLVD, UNIT 600
FOLSOM, CA 95630
PH 916 353 1025
WWW.FRISCHENGINEERING.COM

CH2MHILL®

NO.	DATE	DESCRIPTION	GM/SPEC	DWN	CHKD	SUPV	APVD BY
1	9/8/14	PRE-FINAL (90%) DESIGN		MBY			TPF
0	4/5/13	INTERMEDIATE (60%) DESIGN		MBY			TPF

REVISIONS

APPROVED BY: TPF
SO
SUPV TPF
DSGN MBY
DWN MBY, NC
CHKD MF
OK TPF
DATE
SCALES N/A

TOPOCK GROUNDWATER REMEDIATION PROJECT
P&ID
INFLUENT TANK 4
GAS TRANSMISSION & DISTRIBUTION
PACIFIC GAS AND ELECTRIC COMPANY
SAN FRANCISCO, CALIFORNIA

MICROFILM
BILL OF MATL
DWG LIST
SUPSDS
SUPSD BY
SHEET NO. I-11-04 of SHEETS
REV 1

PLOT DATE: Aug 27, 2014 PLOT TIME: 12:03:57pm
FILENAME: FE-XXX-1104AD.dwg