Pacific Gas and Electric Company®

PG&E Topock
Compressor Station
Needles, California

Supplemental Pre-Final (90%) Design Submittal for the Final Groundwater Remedy

February 2015

CH2MHILL®

ES102411163118BAO

Pacific Gas and Electric Company

Yvonne J. Meeks
Manager

Environmental Remediation

Mailing Address
4325 South Higuera Street
San Luis Obispo, CA 93401

Location
6588 Ontario Road
San Luis Obispo, CA 93405

805.234.2257
Fax: 805.546.5232
E-Mail: yjm1@pge.com

February 2, 2015

Mr. Aaron Yue
California Department of Toxic Substances Control
5796 Corporate Avenue
Cypress, CA 90630

Ms. Pamela Innis
U.S. Department of the Interior, Office of Environmental Policy and Compliance
P.O. Box 25007 (D-108)
Denver Federal Facility Building 56
Denver, Colorado 80225-0007

Subject: Supplemental Pre-Final (90%) Design Submittal for the Final Groundwater Remedy, PG&E Topock Compressor Station, Needles, California

Dear Mr. Yue and Ms. Innis:

In conformance with the October 21, 2014 and December 23, 2014 direction letters from the Agencies, this letter transmits the *Supplemental Pre-Final (90%) Design Submittal for the Final Groundwater Remedy, PG&E Topock Compressor Station, Needles, California*. This Supplemental 90% submittal presents additional information and details for certain items included in the September 2014 90% submittal.

PG&E looks forward to the opportunity to walk through the Supplemental 90% document with the Agencies, interested Tribes, and Stakeholders during the February 19, 2015 Technical Work Group Meeting.

Please contact me at (805) 234-2257 if you have any questions or comments regarding this submittal.

Sincerely,

Yvonne Meeks
Topock Project Manager

cc: Kevin Sullivan/PG&E, Karen Baker/DTSC

Topock Project Executive Abstract

Document Title: *Supplemental Pre-Final (90%) Design for the Final Groundwater Remedy, PG&E Topock Compressor Station, Needles, California* Submitting Agency: DTSC, DOI Final Document? ☐ Yes ☒ No	Date of Document: 02/02/2015 Who Created this Document?: (i.e. PG&E, DTSC, DOI, Other) PG&E
Priority Status: ☒ HIGH ☐ MED ☐ LOW Is this time critical? ☒ Yes ☐ No	Action Required: ☐ Information Only ☒ Review & Comment
Type of Document: ☐ Draft ☒ Report ☐ Letter ☐ Memo ☐ Other / Explain:	Return to: N/A By Date: As specified by DTSC and DOI ☐ Other / Explain:
What does this information pertain to? ☐ Resource Conservation and Recovery Act (RCRA) Facility Assessment (RFA)/Preliminary Assessment (PA) ☐ RCRA Facility Investigation (RFI)/Remedial Investigation (RI) (including Risk Assessment) ☐ Corrective Measures Study (CMS)/Feasibility Study (FS) ☒ Corrective Measures Implementation (CMI)/Remedial Action (RA) ☐ California Environmental Quality Act (CEQA)/Environmental Impact Report (EIR) ☐ Interim Measures ☐ Other / Explain:	Is this a Regulatory Requirement? ☒ Yes ☐ No If no, why is the document needed?
What is the consequence of NOT doing this item? What is the consequence of DOING this item? This submittal is required for compliance with the 1996 Corrective Action Consent Agreement (CACA), the CERCLA Remedial Design/Remedial Action Consent Decree (CD), and the Corrective Measure Implementation/Remedial Design (CMI/RD) Work Plan.	Other Justification/s: ☐ Permit ☐ Other / Explain:

Brief Summary of attached document:

On September 8, 2014, PG&E submitted the Basis of Design Report/Pre-Final (90%) Design Submittal (90% BOD) and the companion Construction/Remedial Action Work Plan (C/RAWP) for the Final Groundwater Remedy at Topock Compressor Station (TCS) to the California Department of Toxic Substances Control (DTSC) and the U.S. Department of the Interior (DOI). Collectively, these documents (including the Operation and Maintenance [O&M] Manual for the Final Groundwater Remedy that is Appendix L of the 90% BOD) are referred to herein as the September 2014 90% submittal.

In conformance with the October 21, 2014 and December 23, 2014 direction letters from the Agencies, this Supplemental Pre-final (90%) Design Submittal for the Final Groundwater Remedy (Supplemental 90% submittal) presents additional information/details for certain items included in the September 2014 90% submittal. Table 1-1 provides an overview of these items (listed below), a summary of relevant information presented in the September 2014 90% submittal, and the additional details presented in this Supplemental 90% submittal:

- Moabi Regional Park facilities
- Power supply for planned improvements at TCS evaporation ponds
- Alternative Bat Cave Wash crossing
- Miscellaneous items including monitoring and remediation wells, Node 5 equipment layout optimization, air compressor building, potential revegetation and mitigation planting areas, construction/staging/soil storage areas, and enhanced pipeline maintenance provisions

Written by: Pacific Gas and Electric Company

Recommendations:

Provide review comments to DTSC and DOI.

How is this information related to the Final Remedy or Regulatory Requirements:

This submittal presents supplemental information for the September 2014 Pre-final (90%) design of the final groundwater remedy.

Other requirements of this information?

None.

Related Reports and Documents:

Click any boxes in the Regulatory Road Map (below) to be linked to the Documents Library on the DTSC Topock Web Site (www.dtsc-topock.com).

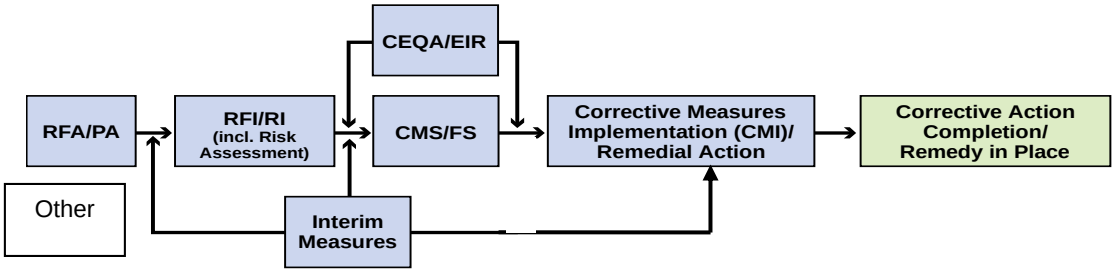

Legend
RFA/PA – RCRA Facility Assessment/Preliminary Assessment
RFI/RI – RCRA Facility Investigation/CERCLA Remedial Investigation (including Risk Assessment)
CMS/FS – RCRA Corrective Measure Study/CERCLA Feasibility Study

Version 9

Supplemental Pre-Final (90%) Design Submittal for the Final Groundwater Remedy

PG&E Topock Compressor Station Needles, California

Prepared for

Pacific Gas & Electric Company

February 2015

CH2MHILL®
155 Grand Avenue
Suite 800
Oakland, CA 94612

Contents

Acronyms and Abbreviations ..... **vii**

1.0 Introduction **1-1**

2.0 Moabi Regional Park Facilities **2-1**
- 2.1 Description, Design Basis, and Assumptions 2-1
  - 2.1.1 Construction Headquarters (including Long-term Remedy Support) 2-1
  - 2.1.2 Soil Processing Area 2-5
  - 2.1.3 Soil Storage Area 2-6
- 2.2 Operation and Maintenance Provisions 2-7
- 2.3 Construction Approaches 2-8
- 2.4 Anticipated Approvals, Authorization, and Permitting 2-9

3.0 Power Supply for Planned Improvements at TCS Evaporation Ponds **3-1**
- 3.1 Description, Design Basis, and Assumptions 3-1
- 3.2 Operation and Maintenance 3-1
- 3.3 Construction Approaches 3-2
- 3.4 Anticipated Approvals, Authorization, and Permitting 3-3

4.0 Alternative Northern Bat Cave Wash Crossing **4-1**
- 4.1 Description, Design Basis, and Assumptions 4-1
- 4.2 Operation and Maintenance Provisions 4-2
- 4.3 Construction Approaches 4-2
- 4.4 Evaluation of the TRC's Proposed Concept for BCW Crossing 4-4

5.0 Miscellaneous **5-1**
- 5.1 Monitoring and Remediation Wells 5-1
  - 5.1.1 Monitoring Wells 5-1
  - 5.1.2 Remediation Wells 5-2
- 5.2 Node 5 Equipment Layout Optimization 5-3
- 5.3 Air Compressor Building 5-4
- 5.4 Potential Revegetation and Mitigation Planting Areas 5-4
- 5.5 Construction, Staging, and Soil Storage Areas 5-7
- 5.6 Enhanced Pipeline Maintenance Provisions 5-7

6.0 References **6-1**

Tables

Supplemental 90% Submittal Tables

1-1 Overview of 90% Design Items and the Additional Details Presented in this Supplemental 90% Submittal 1-3

1-2 Summary of Updated/New Tables, Figures, and Exhibits in the Supplemental 90% Submittal 1-7

BOD Tables (*Located at the end of this document*)

ES-1 Summary of Engineering Design Parameters and Key Remedy Features

ES-2B Estimated Borehole Count Associated with Well Construction: Details

3.6-1 Preliminary Construction of Proposed Groundwater Monitoring Wells

C/RAWP Table (*Located at the end of this document*)

3.2-5 Estimated Construction of Proposed Groundwater Monitoring Wells

Figures

Supplemental 90% Submittal Figures

5.4-1 Potential Revegetation and Mitigation Planting Areas 5-5

5.6-1 Pipeline Maintenance Vaults 5-9

BOD Figures (*Located at the end of this document*)

ES-4A General Remedy System Layout – California

ES-4B General Remedy System Layout – Moabi Regional Park

ES-4C General Remedy System Layout – TCS Evaporation Ponds

ES-4D General Remedy System Layout – Arizona

ES-5 Photo Simulation of New Buildings/Structures in Compressor Station and Transwestern Bench

ES-6 New Building and Infrastructure in the Compressor Station

ES-9 Illustration of Key Changes from the 60% to 90% Design – Pipeline Alignment

ES-10 Illustration of Key Changes from the 60% to 90% Design – Remedy Facilities at the Compressor Station and Transwestern Bench

ES-11 Illustration of Key Changes from the 60% to 90% Design – Well Network

ES-12 Illustration of Key Changes from the 60% to 90% Design – Remedy Features on and Near FMIT Property

ES-14 Detailed Layout of the Construction Headquarters and Long-Term Remedy Suport Area– Moabi Regional Park

3.4-1 Layout of Evaporation Enhancement Equipment at the TCS Evaporation Ponds

3.5-1 Layout of New Buildings and Structures inside the Compressor Station

3.5-2 Photo Simulation of New Buildings/Structures in Compressor Station and Transwestern Bench

3.5-9A Proposed Access Routes for Remedy Features – California

3.5-9B Proposed Access Routes for Remedy Features - Arizona

3.6-1 Proposed Monitoring Well Network

4.1-1 Photo Simulations of Proposed Bat Cave Wash Crossing

C/RAWP Figures (*Located at the end of this document*)

3.1-1 General Remedy System Layout – California

3.1-2 General Remedy System Layout – Moabi Regional Park

3.1-3 General Remedy System Layout – Arizona

3.1-4 General Remedy System Layout – TCS Evaporation Ponds

3.2-1 Estimated Approach to Well Network Construction

4.2-1 Locations of Construction Facilities in Moabi Regional Park

4.2-2 Construction Headquarters Spatial Planning

4.2-2A Photo Simulation of New Remedy Building/Structures in Moabi Regional Park

4.2-2B Photo Simulation of Temporary Soil Processing Area in Moabi Regional Park

4.2-2C Photo Simulation of Soil Storage Area in Moabi Regional Park

4.2-3 Construction Site Plan and Access Routes

Exhibits (*Located at the end of this document*)

BOD Exhibit (Appendix L, O&M Manual, Volume 1, Operation and Maintenance Plan)

2.7-1 Layout of Evaporation Enhancement Equipment at the TCS Evaporation Ponds

C/RAWP Exhibit

3.1-2B Estimated Borehole Count Associated with Well Construction: Details *(Note: This C/RAWP exhibit is the same as BOD Table ES-2B and is therefore not included in this submittal to avoid duplication; please refer to BOD Table ES-2B.)*

Appendices

BOD Appendices

A10 Technical Memorandum: Assessment of Biological Resources for the Proposed Soil Management Areas: Final Groundwater Remedy, Topock Compressor Station, California

A11 Archaeological and Historical Resource Survey of Areas Proposed for Project Features at Moabi Regional Park

C Calculations (*on CD-ROM only*)

- TCS Ponds Improvements - Building load, TEG load/performance
- Moabi Regional Park Facilities – Portable water booster pump, Workshop building structural, Covered parking area structural, Decon pad/Utility pad structural, Construction headquarters electrical
- Bat Cave Wash Crossing – Hydraulics

D Plans (Engineering Drawings) (*presented under separate cover, and also on the CD-ROM*)

D1 Equipment Lists

- D1-4: Freshwater Supply, Conveyance, Storage, and Injection and Remedy-produced Water Conditioning System – Manual Valves
- D1-5: Freshwater Supply, Conveyance, Storage, and Injection and Remedy-produced Water Conditioning System – Self-Contained Automated Valves
- D1-12: TCS Evaporation Ponds Upgrade Equipment
- D1-14: Moabi Regional Park Construction Headquarters Equipment

D2 Engineering Drawings

- 00 General
- 02 Freshwater California
- 05 Inner Recirculation Loop
- 07 Pipeline
- 09 Compressor Station Ponds
- 15 Park Moabi Facilities
- 16 Monitoring Wells

E Technical Specifications (*on CD-ROM only*)

L Operation and Maintenance Manual
Volume 1, Operation and Maintenance Plan, Appendix B, Standard Operating Procedures (*on CD-ROM only*)

- PIPE-SOP-01: Pipeline Maintenance
- CHQ-SOP-01: Off-site trucking of lab and decon pad water
- CHQ-SOP-02: Decon pad O&M
- CHQ-SOP-03: Generator inspection/maintenance
- CHQ-SOP-04: Potable water delivery/O&M
- CHQ-SOP-05: Offsite trucking of sewage

Volume 1, Operation and Maintenance Plan, Appendix C, Select Equipment O&M Manuals (*on CD-ROM only*)

- Global Thermoelectric Generator Model 8550

C/RAWP Appendices

V Technical Memorandum: Preliminary Assessment of Proposed Mitigation Planting Areas for Final Groundwater Remedy Impacts, Topock Compressor Station, California

W Technical Memorandum: Proposed Use of Certain Areas for Construction, Staging, and Soil Storage at PG&E Topock Compressor Station

Acronyms and Abbreviations

µg/L	micrograms per liter
90% BOD	Basis of Design Report/Pre-Final (90%) Design Submittal
AMM	Avoidance and Minimization Measure
APE	Area of Potential Effects
ARARs	applicable or relevant and appropriate requirements
BCW	Bat Cave Wash
bhp	brake horsepower
BLM	U.S. Bureau of Land Management
BMP	Best Management Practice
BOD	Basis of Design
C/RAWP	Construction/Remedial Action Work Plan
CCR	California Code of Regulations
CDFW	California Department of Fish and Wildlife
CEQA	California Environmental Quality Act
CERCLA	Comprehensive Environmental Response, Compensation, and Liability Act
CFR	Code of Federal Regulations
CHPMP	Cultural and Historic Properties Management Plan
CHQ	Construction Headquarters
CIP	clean-in-place
CMP	corrugated metal pipe
Cr(VI)	hexavalent chromium
CVA	Cultural Values Assessment
DOI	United States Department of the Interior
DTSC	California Department of Toxic Substances Control
EIR	Environmental Impact Report
FMIT	Fort Mojave Indian Tribe
ft	foot/feet
HDPE	high-density polyethylene
HFR	Historical Floodplain Revegetation
HNWR	Havasu National Wildlife Refuge
IM-3	Interim Measure No. 3
IRL	Inner Recirculation Loop
IRZ	In-situ Reactive Zone

kWh	kilowatt-hour
MDAQMD	Mojave Desert Air Quality Management District
MMBtu	million British thermal units
NTH	National Trails Highway (also called National Old Trails Highway)
O&M	operation and maintenance
PA	Programmatic Agreement
PG&E	Pacific Gas and Electric Company
PVC	polyvinyl chloride
RCB	reinforced concrete box
RHR	Riparian Habitat Revegetation
RICE	reciprocating internal combustion engine
RWQCB	California Regional Water Quality Control Board, Colorado River Basin Region
SOP	standard operating procedure
Supplemental 90% submittal	Supplemental Pre-final (90%) Design Submittal for the Final Groundwater Remedy
TCS	Topock Compressor Station
TEG	thermoelectric generator
TRC	Technical Review Committee
TW Bench	Transwestern Bench; Transwestern Meter Station Bench
TWG	Technical Working Group
UHR	Upland Habitat Revegetation
UPS	uninterruptible power supply
USACE	U.S. Army Corps of Engineers
USEPA	U.S. Environmental Protection Agency
USFWS	U.S. Fish and Wildlife Services
VAC	volts alternating current
VDC	volts direct current
WDR	waste discharge requirement

SECTION 1

Introduction

Pacific Gas and Electric Company (PG&E) is implementing the selected groundwater remedy for chromium in groundwater at the PG&E Topock Compressor Station (TCS, or the Compressor Station) in San Bernardino County, California. On September 8, 2014, PG&E submitted the Basis of Design Report/Pre-Final (90%) Design Submittal (90% BOD [CH2M HILL 2014a]) and the companion Construction/Remedial Action Work Plan (C/RAWP [CH2M HILL 2014b]) for the Final Groundwater Remedy to the California Department of Toxic Substances Control (DTSC) and the U.S. Department of the Interior (DOI). Collectively, these documents (including the Operation and Maintenance [O&M] Manual for the Final Groundwater Remedy that is Appendix L of the 90% BOD) are referred to herein as the September 2014 90% submittal.

In conformance with the October 21, 2014 and December 23, 2014 direction letters from the Agencies (DOI and DTSC 2014a, 2014b), this Supplemental Pre-final (90%) Design Submittal for the Final Groundwater Remedy (Supplemental 90% submittal) presents additional information/details for certain items included in the September 2014 90% submittal. Table 1-1 provides an overview of these items, a summary of relevant information presented in the September 2014 90% submittal, and the additional details presented in this Supplemental 90% submittal.

For brevity, information presented in the September 2014 90% submittal that also applies to the components covered in this Supplemental 90% submittal is not repeated herein. Such information includes various design criteria (Appendix C of the 90% BOD), technical specifications (Appendix E of the 90% BOD), O&M procedures (O&M Manual [Appendix L of the 90% BOD]), construction methods and sequencing (Sections 3.2 and 3.3 of the C/RAWP), procedures and practices to be followed during construction of the components (Section 4 of the C/RAWP), application of the Comprehensive Environmental Response, Compensation, and Liability Act (CERCLA) Section 121(e)(1) permit exemption (Section 5.3 of the 90% BOD), etc.

Rather than repeating the entirety of the above-listed project information from the September 2014 90% submittal in this Supplemental document, only the key changes/additions are presented herein, and references to the pertinent sections of the September 2014 90% submittal are provided as appropriate to facilitate review. Updated relevant tables, figures, and exhibits from the 90% BOD, O&M Manual, and C/RAWP are also provided at the end of this Supplemental 90% document to facilitate understanding and review; these updated tables, figures, and exhibits are summarized in Table 1-2.

TABLE 1-1
Overview of 90% Design Items and the Additional Details Presented in this Supplemental 90% Submittal
Groundwater Remedy Supplemental 90% Design Submittal
PG&E Topock Compressor Station, Needles, California

Items	Summary of Relevant Information Provided in the 90% Basis of Design Report (Submitted September 8, 2014)	Summary of Additional Details Provided in this Supplemental 90% Submittal (Submitted February 2, 2015)
1. Proposed Facilities at Moabi Regional Park (Construction Headquarters [CHQ] and Long-Term Remedy Support Area, Soil Processing Area, and Soil Storage Area)	• The 90% BOD (CH2M HILL 2014a) and C/RAWP (CH2M HILL 2014b) included figures showing the general layout of the CHQ and long term remedy support area, soil storage area, and soil processing area, and approx. acreage of each area. Also included are general descriptions of planned functions of the CHQ and long-term remedy support area. • Appendix D2 of the 90% BOD included a placeholder for engineering drawings of these facilities (Function Code 15).	• **Section 2** of this document presents supplemental design information for the proposed facilities at Moabi Regional Park which includes: - A CHQ (approximately 2.6 acres) that includes a temporary construction laydown area and a long-term remedy support area. The footprint of the CHQ is designed to simultaneously accommodate PG&E personnel and multiple contractors with their respective employees, equipment/tools, and materials/supplies as well as site visitors (including federal, state, and local agency personnel, Tribal members, monitors, and stakeholders) during the remedy construction phase. Following construction, the overall footprint of the CHQ will be reduced to accommodate a smaller support team during O&M of the remedy. Layout of the CHQ is detailed on the revised C/RAWP Figure 4.2-2 and **new BOD Figure ES-14**, and a visualization is provided as a **new C/RAWP Figure 4.2-2A.** - The temporary construction laydown area will be utilized by construction contractors over the duration of remedy construction. Temporary facilities will include men's and women's restroom trailers, a conference room/consultant office trailer, portable contractor office trailers, tool storage containers (e.g., conex boxes), construction materials, construction equipment, etc. If needed, future provisional features (e.g., temporary noise barrier) may also be installed in this area. - The long-term remedy support area will include PG&E's office trailer, workshop building, a decontamination pad, and a parking shade structure. - A soil processing area (approximately 1.55 acres) is where soils/material displaced during construction activities will be brought for staging, processing, and potential re-use at the project site. Import material for use in construction may also be temporarily staged in this area. A site plan and visualization of the soil processing area are provided in revised C/RAWP Figure 4.2-1 and **new C/RAWP Figure 4.2-2B**, respectively. - A soil storage area (approximately 1.55 acres) will be the primary storage area for excavated soils. Excavated soils removed during construction activities (e.g., soil not used for trench backfill) will be stored here temporarily, pending final disposition in accordance with the Soil Management Plan (Volume 4 of the O&M Manual). A conceptual visualization of the soil storage area is provided as **new C/RAWP Figure 4.2-2C** and represents one possible arrangement using soil bins. • Utilities and other services provided at the CHQ will include electrical power, water and sewer services, fire protection, telecommunications, and a security system. Currently, the potable water, sewer, and fire protection systems are designed as standalone systems. However, PG&E will continue to coordinate with San Bernardino County regarding potential future connection to the Moabi Regional Park water, sewer, and fire water systems. Footprints for the future potential utility connections, including utility corridors, are depicted on revised BOD Figure ES-4B and C/RAWP Figure 4.2-2 and **new BOD Figure ES-14**. In addition, the site security system may include upgraded fencing and other security features. • See also a summary of biological resource and archaeological/historical resource survey results for Moabi Regional Park areas (new **BOD Appendices A10 and A11**, respectively), new supporting calculations (updated **BOD Appendix C**), revised equipment list (Table D1-14 in **BOD Appendix D1**), new engineering drawings (**BOD Appendix D2**), and new/revised specifications (**BOD Appendix E**).
2. Power Supply for Planned Improvements at TCS Evaporation Ponds	• The 90% BOD, O&M Manual, and C/RAWP included information/design for planned improvements at the evaporation ponds with power supplied onsite, from a natural gas powered generator located at the TCS ponds. • There is an option for a direct power feed from the Compressor Station.	• After further evaluation of the direct power feed option from the Compressor Station, PG&E decided to not pursue that option further and instead refine the onsite power generation design presented in the September 2014 90% submittal. • **Section 3** of this document describes the refined design which features: – A concrete masonary utility building to house the natural gas fueled reciprocating internal combustion engine (RICE) electrical power generator and address PG&E's concern about potential vandalism at the ponds. The RICE generator will supply three-phase 120/208-volt alternating current (VAC) electrical power to pumps and three-phase loads. – Thermoelectric generators (TEGs) to supply 24-volt direct current (VDC) power to auxiliary equipment (e.g., lighting, controls, sensors, security cameras, and valve actuators). The TEGs will be located inside a fenced area, adjacent to the utility building. – A transfer switch to provide for the flexibility of supplying power to the auxiliary equipment from the RICE**.** – Natural gas piped from PG&E's natural gas Line 300B, located approximately 500 feet from the generators. Natural gas regulator stand and valves located in the same secure fenced area as the TEGs, with flexible connections to both generators. – Power via electrical cable in underground conduit running from the utility building and TEGs to each load. – An uninterruptible power supply (UPS) to provide for backup power to auxiliary equipment. • Updated Figures ES-4C and 3.4-1 from the 90% BOD Report, Exhibit 2.7-1 from the O&M Manual Volume 1, and Figure 3.1-4 of the C/RAWP (provided at the end of this document) reflect the layout and visualizations of the utility building that will house the RICE, the adjacent fence area that will house the TEGs along with the natural gas stand and valves, and their connections to PG&E's natural gas Line 300B. See also new supporting calculations (**BOD Appendix C**), revised equipment list (Table D1-12A in **BOD Appendix D1**), new/revised engineering drawings (**BOD Appendix D2**), new specifications (**BOD Appendix E**), and new equipment manuals (**BOD Appendix L**), all presented at the end of this document.

TABLE 1-1
Overview of 90% Design Items and the Additional Details Presented in this Supplemental 90% Submittal
Groundwater Remedy Supplemental 90% Design Submittal
PG&E Topock Compressor Station, Needles, California

Items	Summary of Relevant Information Provided in the 90% Basis of Design Report (Submitted September 8, 2014)	Summary of Additional Details Provided in this Supplemental 90% Submittal (Submitted February 2, 2015)
3. Alternative Northern Bat Cave Wash (BCW) Crossing	• The 90% design included a detailed design of a pipe bridge that crosses BCW in the Uplands (also known as the northern BCW aerial crossing or Pipeline A Bridge). • 90% BOD Section 3.3.3.1 text discussed alternatives to the pipe bridge to avoid the Tribes' proposed exclusion area in the Tribal Cultural Values Assessment (CVA) April 25, 2014 Amendment.	• As discussed with Agencies, Stakeholders, and Tribes during the October 29, 2014 Technical Working Group (TWG) and the October 30, 2014 site walk, PG&E has completed its evaluation of alternatives and proposes to replace the aerial crossing with an alternate crossing. It is PG&E's intent to replace the previous design (pipes/conduits on a steel pipe bridge) with this preferred design (pipes/conduits in access road) and to carry forward only one design to completion. • **Section 4** of this document describes the preferred crossing design which features: - Direct embedment of pipes and conduits in the access road, thereby limiting work in the downstream (north) side of the crossing and Tribes' proposed CVA exclusion area and avoiding take of three mature palo verde trees. - Long-term protection of remedy infrastructure while providing a solution for current road flooding situation, by replacing the existing corrugated metal pipe (CMP) culverts under the road with higher capacity concrete box culverts (also called reinforced concrete box [RCB] culverts. Improved drainage in the area will allow more flow, and would thereby both protect the road and embedded infrastructure and allow Bat Cave Wash to return to a more natural state over time. - The concrete roof of the RCB culverts will act as a road, and is sized to provide approximately the same traffic capacity as the existing road and the traffic loading of the nearby public road. The driveable width of the road is approximately the same as the existing road width. - Engineering features to retain soil, prevent erosion, prevent undermining caused by scour, and prevent channelized flow from eroding and scouring the wash bottom. - Vaults on either side of the RCB culverts to allow for future maintenance of pipeline and conduits with minimal additional disturbance. - Road shoulders designated for safety and to allow vehicles to pass slowly in opposite directions. Guard rails along the edges of the RCB culverts and side slopes will protect motorists. • Protection measures for construction of the crossing include limiting work in the downstream (north) side of the crossing and Tribes' proposed CVA exclusion area, protection of nearby palo verde trees, transplantation of a palo verde seedling, and compliance with avoidance and minimization measures when working within BCW, a jurisdictional waterway. • A **new BOD Figure 4.1-1** shows a conceptual visualization of the preferred northern BCW crossing. Updated figures from the 90% BOD Report (ES-4A, ES-9, and ES-12) and the C/RAWP (3.1-1) are also presented to show this preferred design. New supporting calculations and new/revised engineering drawings are also included in **Appendices C and D2**, respectively. • In addition, as directed by the Agencies on December 23, 2014 (DOI and DTSC 2014b), PG&E has evaluated the Technical Review Committee's (TRC's) proposed alternative design concept for the BCW crossing (included as Attachment 4 of the directive letter), and is providing its design opinion on the concept in **Section 4.4** of this submittal.
4. Monitoring and Remediation Wells	• The 90% design included proposed locations and status of arsenic monitoring wells that were based on discussions between PG&E, the Agencies, stakeholders, and Tribes between February and July 2014. • The 90% design depicted some well locations as a general area, instead of a specific location (per discussion with the Agencies).	• Monitoring Wells - Per Agencies' direction on October 21, 2014 and December 23, 2014 (DOI and DTSC 2014a, 2014b), this supplemental design adds specificity to the locations of monitoring wells MW-U, MW-V, MW-X, MW-Y, MW-Z, MW-BB, MW-CC, and MW-EE. It is important to note that the well locations listed above, with the exception of MW-U, MW-X, and MW-Y, were visited during the October 30, 2014 TWG site walk, and inputs received during this site walk were also incorporated into this submittal. In addition, per the Havasu National Wildlife Refuge's (HNWR's) request, PG&E has designed a means to collect water samples from MW-Y (which is located on HNWR land) during remedy O&M that minimizes vehicle traffic from the road to the well head. - The design changes resulting from this new direction/information, which are presented in detail in **Section 5.1.1** of this document, require changes to several 90% BOD and C/RAWP figures, tables, and exhibits. These figures (BOD Figures ES-4A/D, ES-11, 3.5-9A/B, and 3.6-1; C/RAWP Figures 3.1-1, 3.1-3, 3.2-1), tables (BOD Tables ES-2B and 3.6-1; C/RAWP Table 3.2-5), and exhibits (C/RAWP Exhibit 3.1-2B, which is the same as BOD Table ES-2B and so is not presented herein to avoid duplicate material) are included at the end of the document for review and comment. **Appendix D2** includes a revised engineering drawing (Drawing E-16-22) that depicts the well vaults for MW-Y, a specification for the sample point vault (along the access road), and the routing from the well vaults to the sample point vault. • Remediation Wells - In accordance with the Agencies' December 23, 2014 direction letter (DOI and DTSC 2014b), an evaluation of alternative locations for two injection wells, IRL-1 and FW-1, is provided in **Section 5.1.2**. The Fort Mojave Indian Tribe (FMIT), Cocopah, and Hualapai Indian Tribes' brief descriptions of alternative locations for these two wells are in tables provided on December 1 and 2, 2014. The comments provided by the Tribes referenced a figure that has not been received by PG&E; therefore, based on the brief descriptions, PG&E has inferred the locations that are evaluated in this submittal. PG&E did not depict the inferred locations of IRL-1 and FW-1 in the figures included in this submittal because the specific locations preferred by the Tribes are not available.
5. Node 5 Equipment Layout Optimization	• The 90% design layout of Node 5 equipment required a retaining wall. The layout included one aboveground transformer, one aboveground communication panel with a 3-sided shade structure, and associated underground pull boxes.	• The Supplemental 90% design presents an optimized Node 5 equipment layout which eliminated the need for a retaining wall. The optimization involves moving the equipment approximately 25 to 50 feet to the east along the access road, and re-orienting the 3-sided shade structure to open to the north. • **Section 5.2** provides a brief introduction to this topic. **Appendix D2** includes updated engineering drawings (E-00-08, E-00-09, C-05-03, C-05-06, and C-07-21) to reflect the optimized layout.

TABLE 1-1
Overview of 90% Design Items and the Additional Details Presented in this Supplemental 90% Submittal
Groundwater Remedy Supplemental 90% Design Submittal
PG&E Topock Compressor Station, Needles, California

Items	Summary of Relevant Information Provided in the 90% Basis of Design Report (Submitted September 8, 2014)	Summary of Additional Details Provided in this Supplemental 90% Submittal (Submitted February 2, 2015)
6. Air Compressor Building	• The 90% BOD and C/RAWP included a new air compressor building as part of the remedy.	• The Supplemental 90% submittal includes revised figures to indicate that the new air compressor building is not part of the remedy, but rather part of the Topock Compressor Station facility. • **Section 5.3** provides a brief introduction to this topic, and presents the revised 90% BOD Figures ES-4A, ES-5, ES-6, ES-10, 3.5-1, and 3.5-2, and C/RAWP Figure 3.1-1.
7. Potential Revegetation and Mitigation Planting Areas	• Three revegetation/restoration plans were included as appendices to the C/RAWP, namely, Appendix G (Havasu National Wildlife Refuge Habitat Restoration Plan), Appendix N (Aesthetics and Visual Resources Protection and Revegetation Plan), and Appendix O (Habitat Restoration Plan for Riparian Areas and Other Sensitive Habitats). These plans describe the conceptual approaches for avoidance, minimization, and replanting measures, as well as monitoring and success criteria. Areas for revegetation and the specific habitat requirements for revegetation were described in general terms in Section 3.2 of the HNWR Habitat Restoration Plan and Section 2.2 of the Habitat Restoration Plan for Riparian Areas and Other Sensitive Habitats. Specific locations of revegetation areas were not included.	• In response to the Agencies' initial comments on the draft revegetation/restoration plans, PG&E proposed specific areas for revegetation in this Supplemental 90% document. • **Section 5.4** provides a brief introduction to this topic and presents **new Figure 5.4-1** which identifies fifteen potential revegetation areas where mitigation vegetation could be planted to offset potential plant impacts that may occur during construction. These revegetation areas include three Upland Habitat Revegetation (UHR) areas ranging in size from 0.050 to 1.277 acres; six Riparian Habitat Revegetation (RHR) areas ranging in size from 0.042 to 0.559 acre; and six Historical Floodplain Revegetation (HFR) areas ranging in size from 0.050 to 1.815 acres. The actual number of revegetation areas that will be used will depend on the actual plant impacts that may occur during construction and the associated requirements for mitigation plantings. • New **C/RAWP Appendix V** presents a technical memorandum that summarizes the preliminary ecological and environmental information collected during a site visit by CH2M HILL plant ecologist Russell Huddleston and wetland scientist Steve Long on November 20, 2014. The information includes size, accessibility, visibility, soil type, existing vegetation characteristics, and sensitive resources for the proposed areas.
8. Construction, Staging, and Soil Storage Areas	• Section 4.2.3 of the C/RAWP presents the terminology and describes the functions of Primary Work Zones (where actual construction will occur) and Staging Areas (or Support Zones where activities supporting nearby construction will occur). It is critical for construction projects to have sufficient staging areas or support zones in close proximity to areas of construction. PG&E has identified the minimum number of staging areas, in compliance with Agencies' directive, and presented them in the revised C/RAWP Figure 4.2-3, which depicts the proposed soil processing area and soil storage area in Moabi Regional Park. • Section 3.2 of the IM-3 Decommissioning, Removal, and Restoration Work Plan (Appendix F of the C/RAWP) described the site preparation activities and demarcation of primary work zone boundaries during decommissioning. Figures 3-1 through 3-4 of the Work Plan identified the proposed primary work zones and staging areas.	• The Agencies' December 23, 2014 letter (DOI and DTSC 2014b) included Attachments 1-3 from the FMIT, Cocopah, and, Hualapai Indian Tribes, respectively. These attachments included Tribal input on the construction, soil staging, and soil storage area locations. In compliance with the Agencies' directive, PG&E has prepared a technical memorandum that provides clarification on the construction/staging/soil storage terminology and detailed descriptions of the proposed use of the areas still under discussion with the Tribes, as well as justification for the necessity of using these areas during construction and remedy implementation. This memorandum is presented in new **C/RAWP Appendix W**. • **Section 5.5** provides a brief introduction to this topic and references the memorandum in **Appendix W**.
9. Enhanced Pipeline Maintenance Provisions	• Section 5 of the O&M Plan (Volume 1 of the O&M Manual) included a description of the pipeline cleanouts and blow-offs provided along the piping network to facilitate maintenance. Pipe cleanouts are intended to provide access to the pipe for cleanout of blockages and pipe blow-offs are typically provided at low points to allow for removal of solids that settle at the bottom of the pipe. • In addition, a clean-in-place (CIP) system is included in the design of the National Trail Highway (NTH) In-Situ Reactive Zone (IRZ) to facilitate the maintenance of groundwater pipelines by allowing for addition of maintenance chemicals, over a short duration, to remove the collected materials in the pipelines that may impact remedy performance. • For the freshwater pipeline, a sand separator is included at the wellhead to minimize the amount of sand in the water and thereby minimize solids settle-out at the bottom of the downstream conveyance pipe.	After submittal of the September 2014 90% design, PG&E further evaluated the pipeline maintenance approach and identified the following enhancements: • The addition of maintenance additives for short durations to remove collected materials in the pipelines, as included in the NTH IRZ using the CIP system, may be necessary for any remedy piping. • Access to remedy piping, such as that provided by the pipeline cleanouts and blow-offs, should specifically allow for pipeline cleaning using flushing and pigging. This enhanced pipeline maintenance approach requires the addition of one vault along Pipeline A (within the existing footprint of the access road) and one vault along Pipeline H (within the current projected trench footprint), as well as enlargement of a planned vault along Pipeline C (within the current projected trench footprint). See additional details in **Section 5.6** and **new Figure 5.6-1**. A new pipeline maintenance Standard Operating Procedure (PIPE-SOP-01) is also provided in Appendix L of this submittal.

TABLE 1-2

Summary of Updated/New Tables, Figures, and Exhibits in the Supplemental 90% Submittal

Groundwater Remedy Supplemental 90% Design Submittal

PG&E Topock Compressor Station, Needles, California

90% Design Document[1]	Item Number	New or Updated?	Description of New or Updated Items
Tables			
BOD	ES-1	Updated	This table was revised to reflect the following: • Updated information on the power supply for planned improvements at Topock Compressor Station (TCS) Evaporation Ponds. • Updated information on Moabi Regional Park facilities. • Deletion of the northern Bat Cave Wash (BCW) aerial crossing in the Upland.
BOD	ES-2B, 3.6-1	Updated	These tables were updated to reflect Agencies' direction on planned versus future provisional well status. Specifically, MW-EE is confirmed as a future provisional well.
C/RAWP	3.2-5	Updated	This table was updated to reflect Agencies' direction on planned versus future provisional well status. Specifically, MW-EE is confirmed as a future provisional well.
Figures			
BOD	ES-4A	Updated	This figure was updated to show the following: • The new Air Compressor Building as a TCS building, not part of the groundwater remedy • The preferred BCW crossing design • Updated or specific locations (previously shown areas or arcs were deleted) for wells MW-U, MW-V, MW-X, MW-Y, MW-Z, MW-BB, MW-CC, and MW-EE • Underground pipes (to house sampling tubing) and electric conduits from the MW-Y well vaults to a sampling vault located along the access road • Radio communication panels/antennas near and connecting conduits to the existing TCS water tanks and wells MW-X and MW-Y (note that these features were in the 90% design [see Drawings E-10-03, E-16-01, E-16-03, and E-16-23], but were not explicitly called out in figures previously)
BOD	ES-4B	Updated	This figure was updated to show the following: • A visualization of the long-term remedy support area • A revised layout/additional details of Moabi Regional Park areas (e.g., footprints for future potential utility connections and corridors)

TABLE 1-2
Summary of Updated/New Tables, Figures, and Exhibits in the Supplemental 90% Submittal
Groundwater Remedy Supplemental 90% Design Submittal
PG&E Topock Compressor Station, Needles, California

90% Design Document[1]	Item Number	New or Updated?	Description of New or Updated Items
BOD	ES-4C, 3.4-1	Updated	These figures were updated to show the following: • Revised location and visualization of the generator/utility building for the natural gas-fueled reciprocating internal combustion engine (RICE) electrical power • A fenced area next the utility building for the thermal electrical generators (TEGs) along with the natural gas stand and valves, and their connections to PG&E's natural gas Line 300B • An extension of the natural gas line to supply gas from PG&E Line 300B to the generators
BOD	ES-4D, ES-11, and 3.6-1	Updated	• These figures were updated to show updated or specific locations (previously shown areas or arcs were deleted) for wells MW-U, MW-V, MW-X, MW-Y, MW-Z, MW-BB, MW-CC, and MW-EE. • Figure ES-4D was also updated to show underground pipes (to house sampling tubing) and electric conduits from the MW-Y well vaults to a sampling vault located along the access road, and radio communication panels/antennas near and connecting conduits to MW-X, MW-Y, and remote well clusters in Arizona (note that these features were in the 90% design [see Drawings E-16-01, E-16-03, E-16-20 through E-16-23], but were not explicitly called out in figures previously).
BOD	ES-5, ES-6, ES-10, 3.5-1, and 3.5-2	Updated	These figures were updated to show the Air Compressor Building as a TCS building, and not part of the groundwater remedy. In addition, the radio communication panel/antenna near the existing TCS water tanks was added to Figures ES-10, 3.5-1, and 3.5-2 (note that this feature was in the 90% design [see Drawing E-10-03], but was not explicitly called out in figures previously).
BOD	ES-9	Updated	This figure was updated to show the preferred northern BCW crossing design.
BOD	ES-12	Updated	This figure was updated to show the following: • The preferred northern BCW crossing design • Revised well locations in accordance with agency directions
BOD	3.5-9A, 3.5-9B	Updated	These figures were revised to show updated or new access routes to well locations MW-U, MW-Y, MW-Z, MW-DD, and MW-EE
BOD[2]	ES-14	New	This new figure shows a detailed layout of proposed facilities at the Construction Headquarters (CHQ) and the long-term remedy support area in Moabi Regional Park.
BOD[2]	4.1-1	New	This new figure shows two visualizations of the preferred northern BCW crossing design.
C/RAWP	3.1-1	Updated	Same changes as BOD Figure ES-4A
C/RAWP	3.1-2	Updated	Same changes as BOD Figure ES-4B
C/RAWP	3.1-3	Updated	Same changes as BOD Figure ES-4D
C/RAWP	3.1-4	Updated	Same changes as BOD Figures ES-4C and 3.4-1

TABLE 1-2

Summary of Updated/New Tables, Figures, and Exhibits in the Supplemental 90% Submittal

Groundwater Remedy Supplemental 90% Design Submittal

PG&E Topock Compressor Station, Needles, California

90% Design Document[1]	Item Number	New or Updated?	Description of New or Updated Items
C/RAWP	3.2-1	Updated	Same changes as BOD Figures ES-11 and 3.6-1. In addition, added Category 2 designation for MW-Z.
C/RAWP	4.2-1	Updated	This figure was updated to show a revised layout for the Moabi Regional Park areas (e.g., footprints for future potential utility connections and corridors).
C/RAWP	4.2-2	Updated	This figure was updated to show additional details related to the layout of the CHQ and long-term remedy support area including future potential utility connections and corridors, and a provisional noise barrier.
C/RAWP[2]	4.2-2A	New	This new figure shows a conceptual visualization of the CHQ and long-term remedy support area in Moabi Regional Park.
C/RAWP[2]	4.2-2B	New	This new figure shows a conceptual visualization of the soil processing area in Moabi Regional Park.
C/RAWP[2]	4.2-2C	New	This new figure shows a conceptual visualization of the soil storage area in Moabi Regional Park.
C/RAWP	4.2-3	Updated	Same changes as BOD Figures 3.5-9A and 3.5-9B.
NA	5.4-1	New	This new figure shows locations of potential revegetation and mitigation planting areas.
NA	5.6-1	New	This new figure shows the approximate locations for three vaults for enhanced pipeline maintenance.
Exhibits			
O&M Manual Volume 1	2.7-1	Updated	This exhibit was updated to show the following: • Revised location of the generator/utility building for the natural gas-fueled RICE electrical power generator. • A fenced area next to the utility building for the TEGs along with the natural gas stand and valves, and their connections to PG&E's natural gas Line 300B. • An extension of the natural gas line to supply gas from PG&E Line 300B to the generators.
C/RAWP	3.1-2B	Updated	This exhibit was updated to reflect the Agencies' direction on planned versus future provisional well status. Specifically, well MW-CC is now a planned well, while MW-EE is now a future provisional well. Note that this exhibit is the same as BOD Table ES-2B and so is not presented herein to avoid duplicate material.

Notes:

[1] BOD = *Basis of Design Report/Pre-final (90%) Design Submittal for the Final Groundwater Remedy* (CH2M HILL 2014a)
C/RAWP = *Construction/Remedial Action Work Plan for the Final Groundwater Remedy* (CH2M HILL 2014b)
NA= Not applicable (item was newly created for this Supplemental 90% Submittal)
O&M Manual = *Operation and Maintenance Manual Pre-Final (90%) Design Submittal for the Final Groundwater Remedy* (Appendix L of the BOD document)

[2] Figure is new since publication of the September 2014 90% Design; it will be included in the indicated document at the 100% Design stage.

SECTION 2

Moabi Regional Park Facilities

The September 2014 90% submittal presented preliminary information on PG&E's proposed use of three areas in Moabi Regional Park for the construction and long-term support of the remedy. The preliminary information included general layout/approximate size of a construction headquarters (CHQ) and a long-term remedy support area, a soil storage area, and a soil processing area, as well as general descriptions of planned functions in each area. This section presents supplemental information including design basis/assumptions; detailed engineering design; O&M provisions; construction approaches; and anticipated approvals, authorization, and permitting for the Moabi Regional Park facilities and planned uses (see revised BOD Figure ES-4B provided at the end of this document).

Because the proposed soil storage and soil processing facilities are located outside of the Area of Potential Effect (APE) and the Environmental Impact Report (EIR; DTSC 2011) Project Area, additional surveys were completed to support the design. Results of the biological and archaeological/historical sites survey are provided in Appendices A10 and A11, respectively.

2.1 Description, Design Basis, and Assumptions

Moabi Regional Park is located approximately 1.5 miles northwest of the TCS site and is accessible via Park Moabi Road and National Trails Highway. A portion of the northwest area of Moabi Regional Park is currently used as a storage/staging area for off-highway vehicles, mobile homes/associated equipment, boats, and recreational vehicles, and was selected as a candidate location for remedy construction and long-term O&M support functions based on the criteria identified in Section 3.5.3 of the 90% BOD (CH2M HILL 2014a). A mobile home park and the primary active areas of Moabi Regional Park are located to the east and northeast of the planned remedy support area. BNSF Railway tracks are located immediately west and southwest of the soil processing and storage areas.

As shown on updated Figure ES-4B, the Moabi Regional Park facilities will include three main areas: the CHQ (including a long-term remedy support area), the soil processing area, and the soil storage area. Each of these areas, including planned functions, is described in detail below. Supporting material, including calculations, an equipment list, drawings, specifications, and SOPs is provided in Appendices C, D1, D2, E, and L, respectively, of this report.

2.1.1 Construction Headquarters (including Long-term Remedy Support)

The CHQ will comprise a total of approximately 2.6 acres, including a temporary construction laydown area (approximately 1.3 acres) and a long-term remedy support area (approximately 1.3 acres). The footprint of the CHQ is designed to simultaneously accommodate PG&E personnel and multiple contractors with their respective employees, equipment/tools, and materials/supplies, as well as site visitors (including federal, state, and local agency personnel, Tribal members, monitors, and stakeholders) during the remedy construction phase. Following construction, the overall footprint of the CHQ will be reduced to accommodate a smaller support team during O&M of the remedy. A representative layout of the CHQ is depicted on the revised C/RAWP Figure 4.2-2, and a visualization is provided as a new C/RAWP Figure 4.2-2A. The final layout of the temporary construction laydown area will be determined by the construction contractor(s).

Surfacing within the CHQ yard areas will initially consist of a gravel layer during the remedy construction phase. However, portions of the CHQ yard supporting long-term O&M use may be paved in the future.

Designated parking areas for the CHQ will be along the southern fence line that faces National Trails Highway in addition to parking within the fenced area. In addition, an information kiosk will be installed near the pedestrian gate to the long-term remedy support area in order to inform visitors of work being implemented at the project site.

2.1.1.1 Temporary Construction Laydown Area

The temporary construction laydown area will be utilized by construction contractors over the duration of remedy construction (approximately 2 to 3 years followed by an approximately 1-year construction closeout period). At least six lots will be provided in the temporary construction laydown area for the staging of contractor-provided trailers; each lot will include connections to the CHQ electric power supply and fire protection systems (see Section 2.1.1.3). In addition, fencing meeting PG&E's security standards (approximately 6 to 7 feet [ft] tall) will be installed to completely enclose the area (see also Section 2.1.1.3). Fencing improvements may also be installed on the existing fence line for security purposes. A yard hydrant connected to the CHQ potable water system (see Section 2.1.1.3) will be provided in the temporary construction laydown area, near the vehicle gate separating this area from the long-term remedy support area.

Other anticipated features will include temporary facilities (e.g., portable contractor office trailers, tool storage containers [e.g., conex boxes], construction materials, construction equipment, etc.) that will be removed following construction completion. Representative layouts of the temporary construction laydown area are provided in C/RAWP Figures 4.2-2 and 4.2-2A; however, the final layout will ultimately be determined by the construction contractor(s). Future provisional features (e.g., temporary noise barrier; see Section 2.3) may also be installed in this area.

Activities proposed for the construction laydown area will include serving as the primary location for contractor site offices and for the mobilization and management of equipment (drill rigs, excavators, backhoes, cranes, etc.), materials/supplies (pipes, valves, transformers, well materials, etc.), and site workers/contractors (inspectors, supervisors, superintendents, construction workers, etc.). Unaccompanied access to the temporary construction laydown area will be restricted to construction personnel who have completed required site health and safety training and are equipped with required personnel protective equipment.

2.1.1.2 Long-Term Remedy Support Area

The long-term remedy support area will function as PG&E's main construction oversight and support area during construction, and following construction completion it will serve as an O&M support area for the lifetime of the groundwater remedy. As such, the configuration and composition of the long-term remedy support area (see new BOD Figure ES-14) may be optimized over the lifetime of the groundwater remedy based on required uses and in order to reduce overall footprint at the Moabi Regional Park area.

Long-term structures will include the following:

- **PG&E Office Trailer** – This trailer, comprising offices, bathrooms, a kitchenette, and a small conference room, will serve as PG&E's primary office and meeting space during remedy construction (and for long-term O&M management).
- **Workshop Building** – The workshop building will be a 50- by 60-ft pre-engineered steel building with a structural concrete foundation. The sample processing space will include separate soil and water sample processing areas and a sample preparation/administration area, and will be separated from the main workshop with a dedicated exterior door to prevent sample contamination. The soil and water sample processing areas will be outfitted with features including countertops for sample preparation, benches for equipment, sinks, ventilation, sample refrigerators, and supply cabinets/shelves. Sinks will drain to a separate remedy-produced water storage tank located near the utility area (see Section 2.1.1.3). The workshop space will include:
    - A maintenance bay with an overhead crane and storage decks along the western and eastern sides (above the rooms). Staircases will be installed to allow personnel access to the storage decks, and guard railing will be the removable type to provide access for equipment such as a forklift.
    - A separate tech shop (e.g., for work on more delicate/sensitive equipment).

- A separate storage room.
- Two restrooms each with a toilet, sink, and shower.
- A small mechanical room containing a water heater.
- An air compressor (contained in a noise reduction enclosure for noise mitigation) and distributed air network.

A shop sink, eyewash station, and emergency shower will be provided in the maintenance bay along with shelving/storage space and work benches. Access to the maintenance bay will include a full-height, 12-ft-wide garage door to allow for vehicle (e.g., field truck) access for loading/unloading. The height of the workshop will be approximately 23 ft to provide clearance for vehicles and crane access.

The heating, ventilation, and air conditioning (HVAC) system for the workshop will include the use of evaporative or "swamp" coolers for the maintenance bay area and separate wall-mounted ductless split systems for each enclosed room. The split system will include two main components—an outdoor condensing unit and an indoor air-handling unit (i.e., fan coil)—with refrigerant piping connecting the two.

Lighting will be installed per the design criteria provided in Appendix C of the 90% BOD, Section C.6.7. To reduce the electrical demand for lighting during daytime hours, transom windows will be installed on the northern wall of the workshop building to make use of ambient light.

- **Decontamination Pad** – The decontamination pad will be a 16- by 80-ft concrete pad with sufficient capacity for equipment or construction vehicles, including a drill rig. The pad will include convenience electrical outlets, and yard hydrants will be provided directly adjacent to the pad for connection to a pressure washer or steam cleaner. Decontamination rinse water and rainwater collected in the secondary containment will be captured within a sump and transferred to a separate remedy-produced water storage tank located in the utility area (see Section 2.1.1.3).
- **Parking Shade Structure** – The parking shade structure is designed to accommodate 12 vehicles and may also serve as a shaded/covered area for group gatherings (e.g., for morning organizational gatherings).

The above-listed structures will support key functions for long-term remedy O&M including on-site sample analysis and processing; bench scale testing; maintenance of a document repository; and equipment and vehicle storage, decontamination, and maintenance.

In addition, additional structures will be installed in the long-term remedy support area during the construction phase which are anticipated to be removed following construction completion, including the following:

- **Men's and Women's Restrooms** – Men's and women's restroom trailers will be provided for contractor and site visitor use during remedy construction. Each restroom will include bathroom stalls and a shower.
- **Conference Room/Consultant Office Trailer** – This trailer will function as the primary onsite meeting and training space during remedy construction. The conference room/consultant office trailer will also include support rooms for smaller group gatherings.

Storage containers (e.g., conex boxes) may also be staged in the long-term remedy support area. In general, structures installed during the construction phase of the groundwater remedy are intended to accommodate the higher volumes of personnel and activity anticipated for the years during remedy construction. Once construction is complete and their utility has diminished, these trailers and other structures may be removed from the CHQ in order to reduce the overall project footprint at the Moabi Regional Park area.

2.1.1.3 Utilities and Other Services

Utilities and other services provided at the CHQ will include electrical power, water and sewer services, fire protection, telecommunications, and a security system. These are described in detail below.

- **Electrical Power Supply and Distribution** – It is estimated that electrical load for the CHQ could require up to 1.4 million kilowatt-hours (kWh) of electricity annually during remedy construction and 0.85 million kWh of electricity annually during long-term remedy operation (see Appendix D2, Drawing E-15-01 for electrical load details). The primary power supply will be provided by the City of Needles via underground feed from the utility pole located near the northwestern corner of the CHQ yard to a transformer located on the nearby utility pad. C/RAWP Figure 4.2-2 depicts the utility connection footprint; and the final location/ alignment of the electrical utility connection will be determined by the City of Needles. Backup power will be provided via an on-site diesel generator (Kohler Power Systems 200REOZJF) with an integral, double-walled fuel tank. The electrical meter, associated switchgear, and distribution panel board will be housed in an equipment rack located on the utility pad in the northwestern corner of the CHQ yard. Power will be transmitted via electrical cable installed in underground conduit running from the equipment rack/utility pad to each load (e.g., pump system, trailer, building, decontamination pad; see Appendix D2, Drawing E-15-03). Power will be supplied as 3-phase 208 volts alternating current (VAC). Electrical conduit will be installed per the design criteria in Appendix C of the 90% BOD (Section C.2.2).

  Photovoltaic solar panels mounted on the parking shade structure and workshop building will also provide power to the CHQ facilities. Details for the solar power system are provided on Drawing E-15-02 in Appendix D2.

- **Potable Water** – The potable water system for the CHQ will consist of two 5,000-gallon polyethylene tanks connected in series to a skid-mounted booster pump system and pressure (bladder) tank located on the utility pad in the northwest portion of the CHQ yard. Potable water will be trucked into the CHQ from an offsite source on an approximately weekly basis to satisfy a design demand of approximately 8,000 gallons per week. Buried high density polyethylene (HDPE) or polyvinyl chloride (PVC) pipe routed from the pressure tank outlet will supply water to the PG&E office trailer, men's and women's restroom trailers, workshop building, decontamination pad hydrants, and other yard hydrants (three total); see Appendix D2, Drawing C-15-03. The soil processing and soil storage areas may be supplied with small water tanks transferred from the main potable tanks at the CHQ or construction water tanks.

- **Sewer and Wastewater** – Sewage generated from the CHQ will be collected in two 10,000-gallon buried fiberglass-reinforced plastic tanks, connected in parallel, via connections to the PG&E office trailer, men's and women's restrooms, and workshop building (restrooms and shop sink); see Appendix D2, Drawing C-15-03. The sewage tanks will be located near the vehicle entrance to the long-term remedy support area in order to limit personnel exposure to odors while the tanks are being evacuated. An odor neutralization system will also be installed on the tank vent line to mitigate odors. The tanks will be emptied and removed sewage hauled offsite as needed, approximately monthly, based on a design usage of approximately 5,000 gallons per week. Note that the discrepancy in potable water and sewer flow requirements is due to the containerization of wastewater generated at the decontamination pad and sample processing area for separate disposal, and the use of potable water for dust control at the soil areas.

  As described in Section 2.1.1.2, wastewater collected from the decontamination pad and sample processing area sinks in the workshop building will be segregated for disposal. This water will be transferred (via underground pipe via gravity flow) to a separate, double-contained 1,000-gallon decontamination water storage tank located below grade near the utility area (see Appendix D2, drawing C-15-03). An odor neutralization system will be installed on the tank vent line to mitigate odors, if needed. Water from the decontamination water storage tank will be trucked to the appropriate location for management in accordance with the Waste Management Plan (Appendix R of the C/RAWP)

and Volume 1, Operation and Maintenance Plan, of the O&M Manual (Appendix L of the 90% BOD); see also Section 2.2 below.

- **Fire Protection** – As a conservative safety measure, fire sprinklers will be installed in the long-term workshop building. The PG&E office trailer, conference room/consultant office trailer, and contractor trailers will also be equipped with sprinklers. A booster pump and 15,000-gallon water storage tank located on the utility pad in the northwest portion of the CHQ yard will provide fire suppression water for the sprinkler system as well as to a fire hydrant located near the vehicle entrance to the long-term remedy support area (see Appendix D2, Drawing F-15-01). The fire protection system will be designed to provide 1,500 gallons per minute of flow for a duration of 10 minutes. In addition, portable fire extinguishers will be provided in each of the trailers/buildings per the design criteria provided in Section C.5.7 of Appendix C of the 90% BOD.
- **Telecommunications** – Telecommunications services will be available from Frontier Communications and will be brought in with the electrical line (i.e., via underground feed from the utility pole located near the northwestern corner of the CHQ yard to a telecommunications panel located on the nearby utility pad). C/RAWP Figure 4.2-2 depicts the utility connection footprint; the final location/alignment of the electrical/telecommunications utility connection will be determined by the City of Needles. Buried conduit will be provided to route telecommunications cable (fiber optic or conventional copper wire) from the panel to connections at the workshop building, PG&E office trailer, and conference room/consultant office trailer (see Appendix D2, Drawing E-15-03).
- **Security** – Section 3.5.4 of the 90% BOD provides the design basis for site security. In general, the security system at the CHQ will conform to PG&E's security practices, and specific security features may include, but are not limited to, the following (see also Appendix D2, Drawing C-15-04):
  - Perimeter fencing with gates equipped with chains and locks. The vehicle entrance to the long-term remedy support area will have a sliding/motorized gate with keypad/card reader entry. Fencing will also separate the long-term remedy support area from the temporary construction laydown area. Existing perimeter fencing may be upgraded to improve security.
  - Security alarm system for the workshop building, PG&E office trailer, and conference room/consultant office trailer.
  - Security/yard lighting compliant with the design criteria (Appendix C of the 90% BOD, Section C.6.7); yard lighting will consist of lights mounted to the exterior faces of structures facing into the yard area.
  - Closed-circuit security camera mounted to monitor entry to the workshop building as well as the PG&E office trailer.

Currently, the potable water, sewer, and fire protection systems are designed as standalone systems. However, PG&E will continue to coordinate with San Bernardino County regarding potential future connection to the Moabi Regional Park water, sewer, and fire water systems. Footprints for the future potential utility connections, including utility corridors, are depicted on C/RAWP Figure 4.2-2.

2.1.2 Soil Processing Area

The soil processing area, comprising approximately 1.55 acres, is where soils/material displaced during construction activities will be brought for staging, processing, and potential re-use at the project site (C/RAWP Figure 4.2-1). Import material for use in construction may also be temporarily staged in this area. Design basis for the soil processing area is described in Section 2 of the Soil Management Plan (Volume 4 of the O&M Manual). A site plan and visualization of the soil processing area are provided in Figures 4.2-1 and 4.2-2B, respectively. This layout includes:

- Separate staging/storage areas for construction-generated soil (pre-processing) and screened material (post-processing)
- An area where material can be processed (screened/crushed) for onsite use
- A staging area for any material rejected during the screening process
- A staging area for imported material

While these are anticipated to be the primary features of the soil processing area, the final layout will be determined by the construction contractor.

Active equipment in the soil processing area (e.g., soil screening unit, loaders, dump trucks/trailers, etc.) are expected to only be needed during remedy construction. Following construction, this area may also be used as a location for storage of clean soils. Clean soils may also be used in this location as fill material, at the landowner's request.

The soil processing area may include a 20- by 20-ft shade structure to provide a covered rest area for onsite personnel. Water will be transported to the soil processing area in portable tanks as needed (e.g., filled from the main potable water tanks at the CHQ or other construction water source), and hose bibs connected to a tank will be available to provide water for dust control. In addition, connection to the City of Needles electrical utility will be provided via overhead feed from a nearby existing power pole to a new pole installed just outside the fenced yard. From the new pole, the electrical cable will be installed in HDPE conduit and routed to a power distribution and lighting panel located near the entrance gate. C/RAWP Figure 4.2-1 depicts the utility connection footprint; the final location/alignment of the electrical utility connection will be determined by the City of Needles. Security features at the soil processing area will conform to PG&E's security standards (see also Section 3.5.4 of the 90% BOD) and will include perimeter fencing and sliding fence gates with locks. Security lighting will be provided at the gate area and will meet the criteria and standards described in Section 4.6.4.1 of the C/RAWP.

Access to the soil processing area will be via National Trails Highway (Figure 4.2-1). Tracking control Best Management Practices (BMPs) (Section 1.5 of C/RAWP Appendix M [Construction BMP Plan]) may be implemented by improving road entrance and exits, including the installation of temporary tracking pads, to prevent tracking of sediment onto public roads and to provide a driving surface that can support the anticipated construction equipment/vehicles.

2.1.3 Soil Storage Area

The soil storage area, also comprising approximately 1.55 acres, will serve as the primary storage area for excavated soils (see C/RAWP Figure 4.2-1). Excavated soils removed during construction activities (e.g., soil not used for trench backfill) will be stored here temporarily, pending final disposition in accordance with the Soil Management Plan (Volume 4 of the O&M Manual). A conceptual visualization of the soil storage area is provided as C/RAWP Figure 4.2-2C and represents one possible arrangement using soil bins. Soil may also be stored in drums/small containers or as stockpiles, and in multiple different arrangements, per Section 3 of the Soil Management Plan. The soil storage area will operate during remedy construction and until final disposition of stored materials has been determined. Primary equipment to be used in this area includes loaders and dump/haul trucks and trailers.

As with the soil processing area, water will be transported to the soil storage area in portable tanks as needed (e.g., filled from the main potable water tanks at the CHQ or other construction water source), and hose bibs connected to a tank will be available to provide water for dust control. In addition, connection to the City of Needles electrical utility will be provided via overhead feed from a nearby existing power pole to a new pole installed just outside the fenced yard. From the new pole, electrical cable will be routed to a power distribution and lighting panel located near the entrance gate. Figure 4.2-1 depicts the utility connection footprint; the final location/alignment of the electrical utility connection will be determined by the City of Needles. Security features at the soil storage area will conform to PG&E's security standards (see

also Section 3.5.4 of the 90% BOD) and will include perimeter fencing and sliding fence gates with locks. Security lighting will be provided at the gate areas and will meet the criteria and standards described in Section 4.6.4.1 of the C/RAWP.

Access to the soil storage area will be via National Trails Highway (Figure 4.2-1). An existing access road will be used to cross the channelized, ephemeral wash that originates at the outfall from three culverts installed under the BNSF railroad track and that runs southwest to northeast adjacent to the soil storage area. A survey conducted in this area indicated that the access road is in functioning condition but exhibits evidence of erosion/washout from high flow events (see Appendix A11 of this report). It is anticipated that road maintenance activities (e.g., re-grading, filling, compaction, and/or re-surfacing with gravel) will be required within the footprint of the existing roadway to allow for vehicle access to the soil storage area. Maintenance activities of the access road and associated drainage/erosion control features will conform to the general methods and BMPs for inspecting and maintaining access roads and pathways presented in Section 7.4 of the Operation and Maintenance Plan (O&M Manual Volume 1), and Section 1 of the Construction BMP Plan (C/RAWP Appendix M).

In addition, tracking control BMPs (Section 1.5 of the Construction BMP Plan) may be implemented by improving road entrance and exits, including the installation of temporary tracking pads, to prevent tracking of sediment onto public roads and to provide a driving surface that can support the anticipated construction equipment/vehicles.

2.2 Operation and Maintenance Provisions

This section presents O&M provisions specific to the facilities associated with the groundwater remedy that are located within Moabi Regional Park facilities. Procedures for other non-location-specific remedy support functions that are also designated for the Moabi Regional Park facilities—e.g., bench scale testing, sample preparation/onsite testing, equipment calibration, cleaning/ maintenance of removable equipment (i.e., that is transported to the workshop building)—are addressed in Volumes 1 and 2 of the O&M Manual and thus are not discussed herein. Procedures for construction-specific and soil management functions are provided in the C/RAWP and Soil Management Plan (Volume 4 of the O&M Manual), respectively.

Remedy systems at the Moabi Regional Park facilities requiring routine or non-routine O&M include the following:

- **Electrical power supply system** – Inspection and preventative maintenance of the generator and solar panels.
- **Potable water supply and distribution system** – Routine (i.e., weekly) water delivery to the potable water tank and inspection/maintenance of the booster pump.
- **Sewer system** – Routine (i.e., monthly) sewage removal and offsite hauling.
- **Decontamination/other wastewater management system** – Decontamination of construction vehicles and equipment, including drill rigs; management of rainwater collected in the secondary containment; inspection/ maintenance of the sump pump; and offsite hauling of wastewater from the decontamination water storage tank. Water from this tank will be trucked to the appropriate location (e.g., the existing IM-3 treatment plant or TCS evaporation ponds during remedy construction, or the Remedy-produced Water Conditioning Plant during and following remedy startup, or offsite) for management in accordance with the Waste Management Plan (Appendix R of the C/RAWP) and Volume 1 of the O&M Manual.

Detailed standard operating procedures (SOPs) are provided in Appendix L of this report for the above-listed O&M activities. These include:

- CHQ-SOP-01: Offsite hauling of wastewater
- CHQ-SOP-02: Truck decontamination
- CHQ-SOP-03: Generator inspection
- CHQ-SOP-04: Potable water delivery
- CHQ-SOP-05: Offsite hauling of sewage

SOPs for maintenance of aboveground pumps—e.g., booster and sump pumps—and solar panels (Remedy-SOP-04 and PWR-SOP-02, respectively) are available in Appendix B of the Operation and Maintenance Plan (Volume 1 of the O&M Manual). A general SOP for equipment decontamination (SOP-B5) is included in Appendix B of the C/RAWP.

In addition, crane inspection, maintenance, operation, and testing will be performed in accordance with California Occupational Safety and Health Administration requirements (California Code of Regulations [CCR] Title 8, Sections 4990-5035).

Potential hazardous materials/wastes to be used in remedy processes and stored at the CHQ/long-term remedy support area are described in the Project-Specific Hazardous Materials Business Plans (Appendix E of the Operation and Maintenance Plan).

2.3 Construction Approaches

Construction of the Moabi Regional Park facilities will conform to the approaches presented in the C/RAWP for piping and utilities (Section 3.2.2), vertical infrastructure (Section 3.2.3), and site access pathways (Section 3.2.4). As described in Sections 2.1.2 and 2.1.3, portions of the Moabi Regional Park facilities (e.g., soil staging areas, temporary construction laydown area) are intended to support remedy construction but will be phased out of use following construction completion. As part of construction closeout activities, the CHQ will be transitioned to support long-term O&M of the remedy, and infrastructure components that are determined to be no longer needed for long-term O&M will be deconstructed or demobilized. Certain equipment and infrastructure, including the PG&E Office Trailer, workshop building, parking shade structure, decontamination pad, utilities, and security features will be reused for long-term O&M.

BMPs described in Section 4.6 and Appendix M of the C/RAWP for implementation during the remedy construction phase will be implemented at the Moabi Regional Park facilities. If a temporary noise barrier is determined to be required during the construction phase (see C/RAWP Section 4.6.3 for details), it will comply with the EIR Noise Mitigation Measure NOISE-2c (DTSC 2011). C/RAWP Figures 4.2-2 and 4.2-2A show the location of a future provisional noise barrier, which if required may consist of an engineered wall, approximately 325 ft long and between 6 and 20 ft in height, placed along the eastern boundary of the CHQ facing the mobile home park. The need for and final placement, orientation, size, and density of the noise barrier will be determined by a qualified acoustical consultant in accordance with the requirements of EIR Mitigation Measure NOISE-2 (DTSC 2011).

Further, work within jurisdictional waterways will be conducted in conformance with the Avoidance and Minimization Measures (AMMs) specified by the California Department of Fish and Wildlife (CDFW) for the project (CDFW 2013) and BMPs for work in jurisdictional wetlands and waters of the U.S. (see Exhibit 6.1-1 of the 90% BOD and its Attachment).

After completion of remedy construction, revegetation of the areas affected by construction will begin as described in Section 6.1 of the C/RAWP, with the intent to offset potential habitat loss that may be incurred during construction and the goal of restoring affected areas, as closely as possible, to pre-construction conditions. The second phase of revegetation will occur after the system has been decommissioned and removed. Details regarding future remedy decommissioning and restoration will be included in a site-specific Plan for Decommissioning and Restoration of remedy facilities within 120 days of receipt of DOI's

certification of remedial action completion and a determination by DOI that removal of such facilities is protective of human health and the environment.

Any impacts to existing plants requiring mitigation (e.g., ethnobotanically significant plants) will be mitigated in accordance with the three restoration/revegetation plans included in the September 2014 90% submittal (namely, the Aesthetics and Visual Resources Protection and Revegetation Plan, the Havasu National Wildlife Refuge (HNWR) Habitat Restoration Plan, and the Habitat Restoration Plan for Riparian Vegetation and Other Sensitive Habitats, all included as appendices of the C/RAWP) and with the technical memorandum titled *Preliminary Assessment of Proposed Mitigation Planting Areas for Final Groundwater Remedy Impacts, Topock Compressor Station, California* included in Appendix V of this report.

2.4 Anticipated Approvals, Authorization, and Permitting

The Moabi Regional Park facilities are located on federal lands managed by the U.S. Bureau of Land Management (BLM). It is PG&E's understanding that the Record of Decision (DOI 2010), Consent Decree (DOI 2013), and United States Department of the Interior's approval of the C/RAWP constitute permission to implement the selected final groundwater remedy and authorization to access federal property, including the Moabi Regional Park area. Thus, no other permit applications or approvals for access to federal lands will be required.

In addition, pursuant to the CERCLA Section 121(e)(1) permit exemption, activities conducted onsite are exempt from obtaining federal, state, or local permits or complying with other procedural requirements. However, PG&E is still required to comply with the substantive requirements of the identified location-specific and action-specific applicable or relevant and appropriate requirements (ARARs) (DOI 2010). As applicable, permanent fixed equipment emissions/ performance (i.e., of the diesel generator) will comply with federal and state requirements including:

- California Air Resources Board's Airborne Toxic Control Measure for Stationary Compression Ignition Engine (Title 17 CCR 93115)
- United States Environmental Protection Agency's (USEPA's) New Source Performance Standard for Stationary Compression Ignition Internal Combustion Engines (40 CFR Part 60, Subpart III)

In compliance with the CFDW AMMs implemented as part of the CERCLA Section 121(e)(1) permit exemption, impacts within jurisdictional washes are being minimized in the design process. Impacts to riparian vegetation will be offset in accordance with the Habitat Restoration Plan for Riparian Vegetation and Other Sensitive Habitats included in the C/RAWP and with the Preliminary Assessment of Proposed Mitigation Planting Areas for Final Groundwater Remedy Impacts Technical Memorandum presented in Appendix V of this Supplemental 90% submittal.

SECTION 3

Power Supply for Planned Improvements at TCS Evaporation Ponds

The September 2014 90% submittal presented design information for planned improvements to enhance evaporation at the TCS evaporation ponds, with power to be supplied from an onsite (i.e., located inside the ponds fence line) natural gas fueled electrical power generator. There was also an option to supply power directly from the Compressor Station. After further evaluation, PG&E decided to not pursue the direct feed option from the Compressor Station further, but to instead refine the onsite power generation design. This section presents supplemental design information related to onsite power generation.

3.1 Description, Design Basis, and Assumptions

An electrical load of up to 45,000 kWh per annum was estimated for the planned improvements during long-term remedy operation (see Appendix D2, Drawing E-09-01 for electrical load details). Three phase loads and pumps will be supplied with 120/208-VAC by a new natural gas reciprocating internal combustion engine (RICE) electrical power generator (instead of the Capstone Model C30 micro turbine engine power generator described in the September 2014 90% submittal; the reason for this change is the familiarity and existing expertise of PG&E's Gas Transmission and Distribution operation staff with the operation and maintenance procedures associated with RICE generators.) Auxiliary equipment (e.g., lighting, controls, sensors, security cameras, and valve actuators) will be supplied with 24-volt direct current (VDC) power by new thermoelectric generators (TEGs). A transfer switch will provide for the flexibility of supplying power to the auxiliary equipment from the RICE.

The RICE electrical power generator along with the distribution panel, switchgear, controls, uninterruptible power supply (UPS) system, and other associated equipment will be housed in an enclosed, secure utility building (an approximately 17-ft-wide by 25-ft-long by 12-ft-high concrete masonry building with concrete foundation). The TEGs will be located outside of the utility building, in an adjacent secure fenced area (approximately 20 ft wide by 25 ft long with a 9-ft-high fence). Natural gas for the new generators will be piped from PG&E's natural gas Line 300B, located approximately 500 ft away. A natural gas regulator stand and valves will be installed in the same secure fenced area as the TEGs, with flexible connections to both generators. Power will be transmitted via electrical cable installed in underground conduit running from the utility building and TEGs to each load.

Updated Figures ES-4C and 3.4-1 from the 90% BOD Report, Exhibit 2.7-1 from the O&M Volume 1, and Figure 3.1-4 of the C/RAWP (provided at the end of this document) reflect the layout and visualizations of the utility building that will house the RICE, the adjacent fenced area that will house the TEGs, the natural gas stand and valves, and their connections to PG&E's natural gas Line 300B. See also the attached supporting calculations (Appendix C), revised equipment list (Appendix D1, Table D1-12A), new/revised engineering drawings (Appendix D2), technical specifications (Appendix E), and equipment manuals (Appendix L).

3.2 Operation and Maintenance

Supplemental O&M procedures for the RICE electrical power generator and TEGs, as well as contingency planning in the event of power system failure, are discussed below.

RICE Electrical Power Generator

The RICE electrical power generator will utilize natural gas fuel to supply three-phase 120/208 VAC electrical power to pumps and three-phase loads at the ponds. The system consists of a RICE, an alternator, a fuel system, control panel, and power electronics. Key maintenance activities will typically include the following activities:

- Clean radiator matrix monthly or after 100 hours of operation
- Check oil levels, drive belt condition, electrical connections, and operation of emergency stop button weekly or after every 50 hours of operation
- Perform a check of engine fluids, lines, hoses, cooling fan blades, exhaust components, and air intake daily or after every 8 hours of operation

Thermal Electric Generators

The TEGs will consist of three Global Thermoelectric model 8550 power sources, and will utilize natural gas fuel to generate 24 VDC power for supply to auxiliary equipment such as lighting, controls, sensors, security cameras, and valve actuators. TEGs are solid state devices that require minimal maintenance; however, a yearly service check is recommended to maintain reliable service. The annual service check will typically include the following activities:

- Perform power check and conduct maintenance as needed
- Replace fuel filter
- Drain pressure regulator sediment bowl
- Check fuel orifice for clogging
- Clean heat pipe fins, air intake screens, and cabinet interior
- Check all bolts and fasteners for tightness
- Restart TEG

Additional information on maintenance procedures for the TEGs is provided in the Global Thermoelectric equipment catalogue included in Appendix L of this report.

Contingency Planning

The following is supplemental information for the Contingency Plan (O&M Manual Volume 3) Table 2.6-1 (Failure Mode Effect Analysis matrix for the evaporation pond enhancement system), to take into account potential failure of the power supply system.

Failure Mode	Likely Causes for Failure	Effects of Failure	Operational Actions	Possible Contingency Measures
Power Supply Failure	• Generator mechanical, electrical, or controller failure. • Loss of natural gas supply. • Circuit trip.	• Loss of equipment function • Shutdown of drip system.	• Use UPS for control circuits. • Supply power to control circuits and security system by TEGs on parallel circuit.	• Manually operated valves for remedy water discharge to ponds.

3.3 Construction Approaches

Construction of the supplemental components described in Section 3.1 of this report will conform to the site management practices, construction approaches, and BMPs described in the September 2014 C/RAWP, including piping and utilities (C/RAWP Section 3.2.2), vertical infrastructure (C/RAWP Section 3.2.3), site access pathways (C/RAWP Section 3.2.4), and site management practices (C/RAWP Section 4).

3.4 Anticipated Approvals, Authorization, and Permitting

The TCS evaporation ponds are located within a right-of-way (ROW) on federal lands, managed by the BLM. Current access to the ponds and O&M activities conducted there by PG&E (including discharge) are authorized under the BLM ROW and the Colorado River Basin Regional Water Quality Control Board's Waste Discharge Requirements (WDRs) (RWQCB 2004), respectively. It is PG&E's understanding that the Record of Decision (DOI 2010), Consent Decree (DOI 2013), and DOI's approval of the C/RAWP constitute permission to implement the selected final groundwater remedy and authorization to access federal property, including the planned improvements at the TCS ponds. Thus, no other permit applications or approvals for access to federal lands will be required.

In addition, pursuant to the CERCLA Section 121(e)(1) permit exemption, activities conducted onsite are exempt from obtaining federal, state, or local permits or complying with other procedural requirements. However, PG&E is still required to comply with the substantive requirements of the identified location-specific and action-specific ARARs.

PG&E is coordinating with the RWQCB for the renewal of the TCS evaporation ponds WDR which will incorporate any necessary requirements associated with the use of the ponds for discharge of certain wastewater streams related to remedy construction and O&M.

The RICE and TEGs are exempt from compliance with the substantive requirements of Mojave Desert Air Quality Management District (MDAQMD) Rule 1157[1] and Rule 1160[2] because:

- MDAQMD Rule 1157 applies to boilers and process heaters, covering TEGs that rely on a natural gas-fired heating element to drive the temperature differential across the solid-state element power unit. Rule 1157 applies to units with rated heat inputs greater than or equal to 5 million British thermal units per hour (MMBtu/hr), or total annual heat input greater than or equal to 50,000 MMBtu. For this design, the approximate heat input of each TEG is 70,000 Btu/hr based on natural gas consumed, and each has a total annual heat input less than 50,000 MMBtu. Pursuant to Rule 219 section (E)(2)(a)[3], the TEGs are also exempt from permitting requirements based on rated heat inputs.
- Rule 1160 applies to emergency, portable, standby, or stationary internal combustion engines with a rating equal to or greater than 500 brake horsepower (bhp). This rule is not anticipated to be applicable to the RICE. The applicability of Rule 219 section (E)(2)(a)[3] will be further evaluated during the 100% design process.

[1] http://www.arb.ca.gov/drdb/moj/curhtml/R1157.HTM

[2] http://www.arb.ca.gov/drdb/moj/curhtml/R1160.HTM

[3] http://www.mdaqmd.ca.gov/Modules/ShowDocument.aspx?documentid=329

SECTION 4

Alternative Northern Bat Cave Wash Crossing

The September 2014 90% submittal presented design information for a steel pipe bridge that would cross Bat Cave Wash (BCW) in the Upland area (also known as the northern BCW aerial crossing or Pipeline A Bridge). However, the 90% BOD Report also noted that PG&E was evaluating alternatives to the northern aerial crossing of BCW because portions of the Pipeline A Bridge were located in the Tribes' proposed exclusion area defined in the Tribal Cultural Values Assessment (CVA) April 25, 2014 Amendment. Eliminating the pipe bridge would not only limit construction activities in the Tribes' proposed exclusion area but would also avoid take of three mature palo verde trees.

As discussed with Agencies, Stakeholders, and Tribes during the October 29, 2014 Technical Working Group meeting and the October 30, 2014 site walk, PG&E has completed its evaluation of alternatives and proposes to replace the northern aerial crossing with an alternate crossing within the access road. It is PG&E's intent to only carry forward this preferred crossing design to completion. This section presents the design basis/assumptions and detailed design of the preferred crossing, along with O&M provisions and construction approaches. In addition, as directed by the Agencies, PG&E has evaluated the Technical Review Committee's (TRC's) proposed concept for the northern BCW crossing (included as Attachment 4 of the December 23, 2014 directive letter [DOI and DTSC 2014b]), and is providing its design opinion on the concept in Section 4.4.

4.1 Description, Design Basis, and Assumptions

PG&E's preferred design involves installing pipes and conduits in the access road. Since the existing access road is flooded periodically, the road itself and new infrastructure that is embedded in the road can be damaged by flooding over time. Therefore, the existing corrugated metal pipe (CMP) culverts under the road will be replaced with higher-capacity concrete box culverts (also called reinforced concrete box [RCB] culverts). Improved drainage in the area will allow more flow, and thereby would both protect the road and embedded infrastructure and return BCW to a more natural state over time.

The RCB culverts are sized to convey the 25-year 24-hour design storm event. The amount of precipitation in the event was selected per the design criteria listed in Appendix C of the 90% BOD Report (Section C.2.3). The volume and velocity of water flowing into BCW was estimated with HEC-1, an industry-standard software package developed by the U.S. Army Corps of Engineers to model flow of water across the ground surface. The elevation of floodwater in BCW was estimated using HEC-RAS, an industry-standard software package for modeling the flow of surface water through rivers and other channels.

The RCB culverts are also designed to be a low point over which water from larger-than-design storm events will flow without damaging the remedy infrastructure. The remedy piping and conductors will be protected inside pipe sleeves that will be cast into the concrete roof of the RCBs. Concrete cutoff walls will extend below the edges of the RCB culverts to prevent undermining caused by scour. Riprap pads will extend up- and downstream to prevent channelized flow from eroding and scouring the wash bottom. Concrete wing walls will be provided at all four corners of the RCB culverts to retain soil and prevent erosion.

The concrete roof of the RCB culverts will act as a road; they are sized to provide approximately the same traffic capacity as the existing road and the traffic loading of the nearby public road. The drivable width of the road is designed to approximate the existing road width. Road shoulders are designated for safety and to allow vehicles to pass slowly in opposite directions. Guard rails are provided along the edges of the RCB culverts and steep side slopes for the protection of motorists.

In compliance with the EIR mitigation measure AES-2e (DTSC 2011), integral color concrete that is consistent with the surrounding natural color palette will be used in place of standard gray concrete. In addition to

natural-colored concrete, the riprap and metal guard rails will also be stained to more closely match the surrounding natural colors.

In addition, in compliance with the CFDW AMMs implemented as part of the CERCLA Section 121(e)(1) permit exemption, impacts within BCW, a jurisdictional waterway, are being minimized in the design process (e.g., limit the construction footprint in BCW, install erosion control measures to minimize long-term O&M in the BCW, etc.). Impacts to riparian vegetation will be offset in accordance with the *Habitat Restoration Plan for Riparian Vegetation and Other Sensitive Habitats* included in the C/RAWP (Appendix O) and with the technical memorandum titled *Preliminary Assessment of Proposed Mitigation Planting Areas for Final Groundwater Remedy Impacts, Topock Compressor Station, California*, included in Appendix V of this submittal.

A new BOD Figure 4.1-1 shows a conceptual visualization of the preferred northern BCW crossing. Figures from the 90% BOD Report and the C/RAWP (see BOD Figures ES-4A, ES-9 and ES-12 and C/RAWP Figure 3.1-1) and Table ES-1 from the BOD (provided at the end of this document) were updated to reflect this design. See also new and revised engineering drawings included in Appendix D2, and supporting calculations in Appendix C of this report.

4.2 Operation and Maintenance Provisions

Two belowground pipe vaults will be provided in the access road on either side of the RCB culverts to allow access for pipeline maintenance and containment of leakage, if any, from secondary containment pipe along this segment of Pipeline A. Belowground electrical boxes are also provided in the access road on either side of the RCB culverts to provide access to maintain electrical conduits, instrumentation, and control elements.

Maintenance of the RCB culverts and drainage/erosion control features described in Section 4.1 will conform to the general methods and BMPs for inspecting and maintaining access roads and pathways presented in Section 7.4 of the O&M Plan (O&M Manual Volume 1) and Section 1 of the Construction BMP Plan (C/RAWP Appendix M). The new access road and riprap pads will be inspected, at a minimum, after large precipitation events to look for signs of damage (e.g., cracks, potholes) or erosion. If damaged, portions of the road including side slopes may be repaired using appropriate maintenance methods. Damaged riprap pads will be repaired by replacing the eroded riprap. Should this happen frequently, consideration might be given to thickening the edges of the riprap pads. New riprap would be stained to match adjacent riprap.

The openings of the RCB culverts will be inspected, at a minimum, following large precipitation events to check for the presence of large pieces of debris. Large objects could become wedged in the orifices, trap smaller objects, and eventually impede the flow of water. Equipment such as bobcats and/or backhoes, as well as hand tools and pickup trucks, may be used to remove large objects. This procedure would require equipment and vehicles to enter BCW.

The concrete and guard rail structures will also be inspected periodically, and in the case of guard rails, after any vehicle accident that might occur. Damaged portions of the concrete structures will be repaired by patching with mortar, grout, cement, concrete, and/or epoxy. Damaged portions of guard rail will be replaced, possibly requiring digging to replace posts. Discolored concrete or guard rail could be repaired by re-staining the material.

4.3 Construction Approaches

Construction of the design components described in Section 4.1 of this report will conform to the site management practices, construction approaches, and BMPs described in the September 2014 C/RAWP, including piping and utilities (C/RAWP Section 3.2.2), site access pathways (C/RAWP Section 3.2.4), and site management practices (C/RAWP Section 4, including pre-construction activities in Section 4.2).

Pre-construction activities for the crossing relate primarily to limiting work in the downstream (north) side of the crossing and Tribes' proposed CVA exclusion area, protecting nearby palo verde trees, transplanting a palo verde seedling, working within BCW (a jurisdictional waterway), and the need to close the access road for construction. Pre-construction activities will be conducted as follows:

- Demarcation of the primary work zone for the crossing will be conducted as detailed in Section 4.2.3 of the C/RAWP. Tribal monitors will be invited to participate in/or observe the demarcation of work areas. Protective measures may be used, if warranted, on or around archaeological or historical sites to protect the resource from disturbance.
- The mature palo verde trees in the vicinity of the crossing will be protected in accordance with approved site management practices/protocols and avoidance and minimization measures before starting ground-disturbing activities. Similarly, a palo verde seedling growing in between the existing CMPs will be transplanted by authorized personnel before the contractor starts ground-disturbing activities. The transplanted palo verde seedling will be placed within a revegetation and mitigation planting area (see Section 5.4 and Appendix V of this report) along with any other seedlings that require transplantation.
- Work within BCW will be conducted in conformance with the AMMs specified by CDFW for the project and BMPs for work in jurisdictional wetlands and waters of the U.S. (see Exhibit 6.1-1 of the 90% BOD).
- Temporary closure of the access road will be required for construction of the RCB culverts and approaches. Notification and coordination with land owners, land managers, and other affected entities will be conducted prior to closure.

After the pre-construction activities have been conducted, the general steps and sequence for constructing the crossing are:

- Demolish and remove existing CMP culverts, overlying road, and riprap.
- Prepare site, install RCB culverts, wing walls, and guard rails.
- Install road approaches and erosion control measures (i.e., riprap).
- Install piping/conduits and associated vaults.

The existing CMPs, the overlying road, and riprap will likely be removed by mechanical means. These items will be removed with construction equipment and placed in haul vehicles for removal. Typical equipment for this work is shown in Exhibits 3.2-4 and 3.2-5 of the C/RAWP. After site preparation, the RCB culverts, wing walls, and guard rails will be installed as described for vertical infrastructure in Section 3.2.3 of the C/RAWP. Typical equipment for this work is shown in Exhibit 3.2-10 of the C/RAWP.

The road approaches will be installed as described for the Transwestern Bench access road in Section 3.2.4.2 of the C/RAWP. Riprap pads will be installed up- and downstream of the RCB culverts. Typical equipment for this work is shown in Exhibit 3.2-11 of the C/RAWP. In compliance with EIR mitigation measure AES-2e, the riprap, along with concrete and guard rail structures, will be stained to more closely resemble the colors in the surrounding area. The color will be selected in the field based on the results of test plots. Stain will be applied per manufacturer's instructions for each type of material to be colored (i.e., rock and metal).

The piping/conduits and associated belowground vaults will be installed as described for piping and utilities in Section 3.2.2.1 of the C/RAWP. Typical equipment for this work is shown in Exhibit 3.2-4 of the C/RAWP.

The conceptual narrative for the anticipated steps in the decommissioning of the remedy is provided in Attachment T of Appendix I of the 90% BOD. Decommissioning of this crossing design will involve pulling the process pipes and conductors out of the pipe sleeves, and then either a) filling the pipe sleeves with concrete or b) removing the RCB culverts and replacing them with a new road crossing. Details regarding decommissioning will be included in a site-specific Plan for Decommissioning and Restoration of remedy facilities within 120 days of receipt of DOI's certification of remedial action completion and a determination by DOI that removal of such facilities is protective of human health and the environment.

4.4 Evaluation of the TRC's Proposed Concept for BCW Crossing

Attachment 4 of the Agencies' December 23, 2014 directive letter (DOI and DTSC 2014b) is a technical memorandum from the TRC dated November 12, 2014 that presents alternative design concepts for the northern BCW crossing. The alternative design concept of installing a new low-water stream crossing and burying the remedy infrastructure under the crossing is not new to the Topock site. Low-water crossings, also known as "fords" in engineering jargon, were considered during the remedy design. Both options of the ford concept, a vented ford and an unvented ford, would be similar to existing or past conditions at the Topock site. The proposed vented ford would require removing the existing CMP culverts, burying the remedy infrastructure underground in the wash, and installing new but nearly identical drainage structures. The proposed unvented ford would require similar construction activities, to include burial in the wash, and the end result would look much like the unimproved ford that was used to cross the wash before the existing culverts were installed.

Both the vented and unvented ford options would be impassable to vehicles during periodic flood events. The wash is subject to periodic flooding, and before installation of the existing culverts the road was impassable to vehicles during any flood event large enough to create flow in the wash. Today, even with the existing culverts, the road is still overtopped by flooding periodically. The ability of the proposed vented ford to pass vehicles during flood events would likely be less than that provided by the existing culverts. However, the proposed unvented ford would likely be impassable to vehicles during any flood event large enough to create flow in the wash.

It is important to note that the existing access/service road, including the existing wash crossing, is used by multiple entities to carry out operation and maintenance activities. Entities using the road include, but are not limited to, PG&E, BNSF Railway, Southwest Gas Corporation, Southern California Gas Company, the City of Needles, and land owners and managers. Any change to the crossing has the potential to affect these entities and their activities.

In PG&E's opinion, while the proposed ford concepts offer some positive benefits, and might be viable options at other sites, they are not appropriate for the Topock remedy for the following reasons:

- A ford would require burying the remedy infrastructure underground in the bottom of the wash, which would violate Agency direction and Tribal preference provided at the 30% phase of design.
  - PG&E was directed to eliminate trenches in Bat Cave Wash after the 30% phase of design.
- The proposed unvented ford would drastically alter the road profile which would violate PG&E's design criterion to keep the elevation and profile of the road surface at or near existing.
  - The design criterion was developed so that the features of the new crossing (such as elevation, width, slopes, etc.) would be similar to those of the existing service/access road to allow continued use by PG&E and other entities. Drastically altering the road parameters could negatively affect all users.
- The fords would be overtopped by the 25-year 24-hr design storm event, which would violate PG&E's hydraulic design criterion. In other words, the fords would be impassable during the design storm event.
  - The design criterion was developed to provide vehicle access during the design flood events and reduce the frequency of road maintenance required on this access road to allow continued use by PG&E and other entities. Designing a crossing that could be flooded more frequently, is therefore less passable, and is likely to require increased maintenance could negatively affect all users.

SECTION 5

Miscellaneous

5.1 Monitoring and Remediation Wells

This section presents additional information associated with the location of monitoring and remediation wells in accordance with the Agencies' October 21, 2014 and December 23, 2014 direction letters (DOI and DTSC 2014a, 2014b) as well as additional information obtained since the submittal of the 90% design in September 2014. The design changes resulting from this new direction/information, which are presented in detail in the following subsections, require changes to several 90% BOD and C/RAWP figures, tables, and exhibits. These figures (BOD Figures ES-4A/D, ES-11, 3.5-9A, 3.5-9B, and 3.6-1; C/RAWP Figures 3.1-1, 3.1-3, and 3.2-1), tables (BOD Tables ES-2B and 3.6-1; C/RAWP Table 3.2-5), and exhibits (C/RAWP Exhibit 3.1-2B) were updated to reflect the supplemental design details and are presented at the end of this document for review and comment.

5.1.1 Monitoring Wells

The September 2014 90% submittal included proposed locations and status of monitoring wells that were based on discussions between PG&E, the Agencies, stakeholders, and Tribes between February and July 2014. The 90% submittal also depicted some well locations as general areas, instead of a specific location (per discussion with the Agencies).

Per the Agencies' direction on October 21, 2014 and December 23, 2014, updated and new specific locations and access routes to select monitoring wells are presented in this Supplemental 90% submittal for review and comment (see BOD Figures 3.6-1 for well locations and 3.5-9A/B for access routes). It is important to note that the proposed locations listed below, with the exception of MW-U, MW-X, and MW-Y, were visited during the October 30, 2014 Technical Working Group (TWG) site walk, and inputs received during this site walk were also incorporated into this submittal. This supplemental design information adds specificity to the location of the following monitoring well locations:

- **MW-U (planned well)** – The purpose of MW-U is to provide additional data along the western edge of the hexavalent chromium plume. An area within the median of Interstate 40 that was previously presented for MW-U has been replaced with a specific location. This location is within the boundary of the previously presented area in the highway median.
- **MW-V (future provisional well)** – The purpose of MW-V is to provide additional data, as needed based on data collected from monitoring wells during remedy construction, along the western edge of the chromium plume. The two separate candidate areas to the west of Bat Cave Wash (north and south of the gas pipeline easement) previously presented for MW-V have been replaced with a specific location. This location is within the boundary of the previously presented northern area.
- **MW-X and MW-Y (planned wells)** – The purpose of MW-X and MW-Y is to provide additional data east of the River Bank Extraction Wells. An area along the Arizona bank of the Colorado River that was previously presented for these two well locations has been replaced with two specific locations. MW-X is located along the existing gravel access road, and MW-Y is located approximately 265 ft east of the access road. These two locations are within the boundary of the previously presented area.

  In addition, per the HNWR's request, PG&E has designed a means to collect water samples from MW-Y (which is located on HNWR land) during remedy O&M that minimizes vehicle traffic from the road to the well head. This involves installing two small 1.5-inch plastic pipes (to house sampling tubing) and four 2-inch electric conduits from the well vaults to a vault (called the sample point vault) located along the access road. The sample point vault will be equipped with fittings to allow for sampling of MW-Y while minimizing vehicle traffic from the road to the well heads. Appendix D2 contains a detailed engineering

drawing (Drawing E-16-22) that depicts the well vaults for MW-Y, a specification for the sample point vault, and the routing from the well vaults to the sample point vault.

- **MW-Z (planned well)** – The purpose of MW-Z is to provide additional data along the northern edge of the hexavalent chromium plume. An area to the north of the mouth of Bat Cave Wash that was previously presented for MW-Z has been replaced with a specific location. This location is within the boundary of the previously presented area.
- **MW-BB and MW-CC (planned wells)** – The purpose of MW-BB and MW-CC is to provide arsenic monitoring data 150 ft and 225 ft, respectively, from the IRL-2 injection well. MW-BB was previously presented as a specific location north of the dirt access road (approximately 90 ft from IRL-2), and MW-CC was presented as an area south-southeast of the road. Both locations have been moved onto the access road at the appropriate distances from IRL-2, replacing the previous specific location (MW-BB) and area (MW-CC). The change was made based on input from the Tribes and Agencies, as well as general design concurrence from Southwest Gas subsequent to the submittal of the September 2014 90% submittal. However, Southwest Gas reserves final concurrence pending the review of final construction plans and their direct observations in the field during construction.
- **MW-DD (planned well) and MW-EE (future provisional well)** – The purpose of MW-DD and MW-EE is to provide arsenic monitoring data 150 ft and 225 ft, respectively, from the IRL-2 injection well. The location for MW-DD is unchanged from that presented in the September 2014 90% submittal; however, the specific location for MW-EE has been moved to the south-southeast in accordance with the Agencies' direction. As detailed in the December 23, 2014 direction letter (DOI and DTSC 2014b), this location as well as the access routes for MW-DD and MW-EE are estimated based on the map presented by the Tribes during the November 18 and 19, 2014 TWG meeting and is a placeholder location pending the review of additional data. While the construction of MW-DD is planned, MW-EE is a future provisional well dependent on groundwater monitoring data collected from other wells during remedy construction and operation. If MW-EE is directed for construction following the review of data and discussion between PG&E, the Agencies, and the Tribes, it will be constructed at either this location, or at an alternative location that better matches the desired outcome.

5.1.2 Remediation Wells

In accordance with the Agencies' December 23, 2014 direction letter (DOI and DTSC 2014b), an evaluation of alternative locations for two injection well wells, IRL-1 and FW-1, is provided in this Supplemental 90% submittal. The Fort Mojave Indian Tribe, Cocopah, and Hualapai Indian Tribes' brief descriptions of alternative locations for these two wells are in tables provided on December 1 and 2, 2014. The comments provided by the Tribes referenced a figure that has not been received by PG&E; therefore, based on the brief descriptions, PG&E has inferred the locations that are evaluated in the following subsections. PG&E did not depict the inferred locations of IRL-1 and FW-1 in the figures included in this Supplemental 90% submittal because the specific locations preferred by the Tribes are not available.

Injection Well FW-1

An alternative location for FW-1 is mentioned in the Staging Area 12 field of the comment tables provided by the Tribes (i.e., it is not included as a unique line item for the well). No other information is provided. Therefore, PG&E assumes that the alternative location is meant to be within Staging Area 12. Based on previous discussion with the Tribes, most notably during the October 30, 2014 TWG site walk, PG&E assumes the Tribes prefer the well location be to the west of the currently planned location. It is estimated that this represents a move of about 10-20 ft to the west. If PG&E's assumptions are correct, this change can most likely be accommodated, but the required 150-ft and 225-ft distances (required by the RWQCB) from the existing monitoring well clusters to the preferred FW-1 location will have to be evaluated pending the Tribes' identification of a specific mapped location. Because the arsenic monitoring wells for FW-1 are existing well clusters, there is not much flexibility in the FW-1 location if the required 150-ft and 225-ft

distances are to be met. That said, once the specific location preferred by the Tribes is provided, PG&E, the Agencies, and the Tribes can discuss an acceptable precise well location in this general area. It should be noted that even if the FW-1 well location is shifted 10-20 ft west, it is estimated that the primary construction zone would still extend eastward and thus include the area of the currently planned FW-1 well location.

Injection Well IRL-1

The Tribes proposed that the IRL-1 injection well location be "moved south into road." PG&E assumes this would be a location within the existing access road footprint (as opposed to the shoulder of the road) that would also be 225 ft from the existing MW-41 monitoring well cluster, which will be used for arsenic monitoring. This represents a move of IRL-1 by approximately 50 ft to the south-southeast. PG&E has evaluated this location and recommends leaving IRL-1 at the location proposed in the September 2014 90% submittal. While the effect on groundwater hydraulics by this inferred shift of the IRL-1 well location has not been assessed with flow modeling, it is not expected to create a significant impact to the simulated or anticipated hydraulics, assuming the well location is still outside the hexavalent chromium plume; however, the existing road is not wide enough to accommodate both Pipeline A and the IRL-1 well and associated infrastructure. The road is approximately 16 ft wide and it is estimated that the minimum combined width of all IRL-1 well and Pipeline A infrastructure is approximately 18 ft based on the following breakdown:

- Two IRL-1 well vaults, each approximately 5.7 ft wide, installed in-line with narrowest dimension perpendicular to Pipeline A.
- Two electrical pull boxes, each approximately 1.5 ft wide, installed in-line with the narrowest dimension perpendicular to Pipeline A.
- Pipeline A trench installed down the axis of the road with a minimum width of approximately 8.7 ft.
- Minimum separation between elements for constructability is approximately 2 ft (two 1-ft gaps separating the three elements).
- It is assumed that the Southwest Gas pipeline is more than 2 ft outside of the road, so additional separation between groundwater remedy infrastructure and the gas pipe isn't required. If this assumption is incorrect and the gas pipeline is in the road, this presents an additional space constraint.

An alternative to constructing the IRL-1 well and associated infrastructure completely within the road is to shift the IRL-1 infrastructure as far into the road as possible with the understanding that some will extend into the shoulder of the road, similar to plans for the construction of IRL-3. This compromise would present slightly more risk since IRL-1 must be constructed outside of the plume and a shift to the south-southeast is closer to the plume (if the well is constructed within the plume, a replacement well might be required). In any scenario where IRL-1 is shifted, associated monitoring wells MW-P and MW-AA would need to be shifted accordingly. Based on the brief descriptions provided by the Tribes, it is inferred that both MW-AA and MW-P would remain within the area across from IM-3 referred to as staging area 6, and remain at distances of 150 ft and 50 ft, respectively, from the shifted IRL-1 well location.

5.2 Node 5 Equipment Layout Optimization

The layout of Node 5 equipment (one aboveground transformer, one aboveground communication panel with a three-sided shade structure, and associated underground pull boxes) was optimized to avoid the need to construct a retaining wall. The optimization involves moving the equipment approximately 25 to 50 ft to the east along the access road, and re-orienting the shade structure to open to the north. Appendix D2 contains revised engineering drawings (E-00-08, E-00-09, C-05-03, C-05-06, and C-07-21) that reflect the optimized layout.

5.3 Air Compressor Building

The 90% BOD Report and C/RAWP included a new air compressor building as part of the remedy. The new air compressor building is for the Topock Compressor Station, and is not part of the remedy project. To free up the space for the new generators to be installed inside the Auxiliary Building, the existing air compressors will be consolidated with the existing air dryer in a new Air Compressor Building located just to the east of their current location. This new air compressor location is preferred by the Compressor Station staff for ease of operation and maintenance of both the power and the compressed air systems. Revised figures (BOD Figures ES-4A, ES-5, ES-6, ES-10, 3.5-1, and 3.5-2, and C/RAWP Figure 3.1-1) are provided at the end of this document for review.

5.4 Potential Revegetation and Mitigation Planting Areas

Revegetation in the project area is expected to take place in two phases: the first phase occurring concurrently with and immediately after construction, and the second phase occurring after the system has been decommissioned and removed. The existing information concerning revegetation is associated with the first phase just as the final groundwater remedy system is brought online and begins operation.

Three revegetation/restoration plans were included as appendices to the C/RAWP, namely, Appendix G (Havasu National Wildlife Refuge Habitat Restoration Plan), Appendix N (Aesthetics and Visual Resources Protection and Revegetation Plan), and Appendix O (Habitat Restoration Plan for Riparian Areas and Other Sensitive Habitats). These plans describe the conceptual approaches for avoidance, minimization, and replanting measures, as well as monitoring and success criteria. Areas for revegetation and the specific habitat requirements for revegetation were described in Section 3.2 of the HNWR Habitat Restoration Plan and Section 2.2 of the Habitat Restoration Plan for Riparian Areas and Other Sensitive Habitats.

The revegetation and restoration that is to be conducted pursuant to these plans includes several aspects. Some of the disturbed area within the construction footprint will be replanted with new plantings where those plants will not interfere with system operation, maintenance, or future decommissioning. Some plants, such as arrow weed, are expected to regenerate largely on their own after having been cut or trimmed to allow for construction. Some disturbed areas (such as the remedy pipeline corridors) will not be replanted until the remedy is decommissioned to allow access for operation, maintenance, and decommissioning. It will also be important to avoid placing mitigation plants in an area where their roots may adversely affect the installed underground infrastructure. In those areas where such access must be maintained in the riparian corridors, revegetation will be accomplished in the first phase by planting new plants in areas immediately adjacent to the pipeline area that must be maintained; then in the second phase, the entire area will be revegetated after the completion of the remedy system operation, when the decommissioning and removal activities have been completed. It is recognized that the future system decommissioning and removal activities may adversely affect mitigation plantings as well as natural regeneration that has occurred within the original construction footprint. These plant impacts will be addressed in the second phase of revegetation and restoration.

In response to comments from DOI on the draft plans, proposed locations of potential revegetation areas are presented in the new Figure 5.4-1 on the following page. As described below, a detailed assessment of these areas is provided in a technical memorandum included in Appendix V. There are fifteen potential revegetation (i.e., mitigation planting) areas where mitigation plants could be planted to offset potential plant impacts within the construction footprint. These revegetation areas include three Upland Habitat Revegetation (UHR) areas ranging in size from 0.050 to 1.277 acres; six Riparian Habitat Revegetation (RHR) areas ranging in size from 0.042 to 0.559 acre; and six Historical Floodplain Revegetation (HFR) areas ranging in size from 0.050 to 1.815 acres. The actual number of revegetation areas that will be used will depend on the actual plant impacts that may occur during construction and the associated requirements for mitigation plantings.

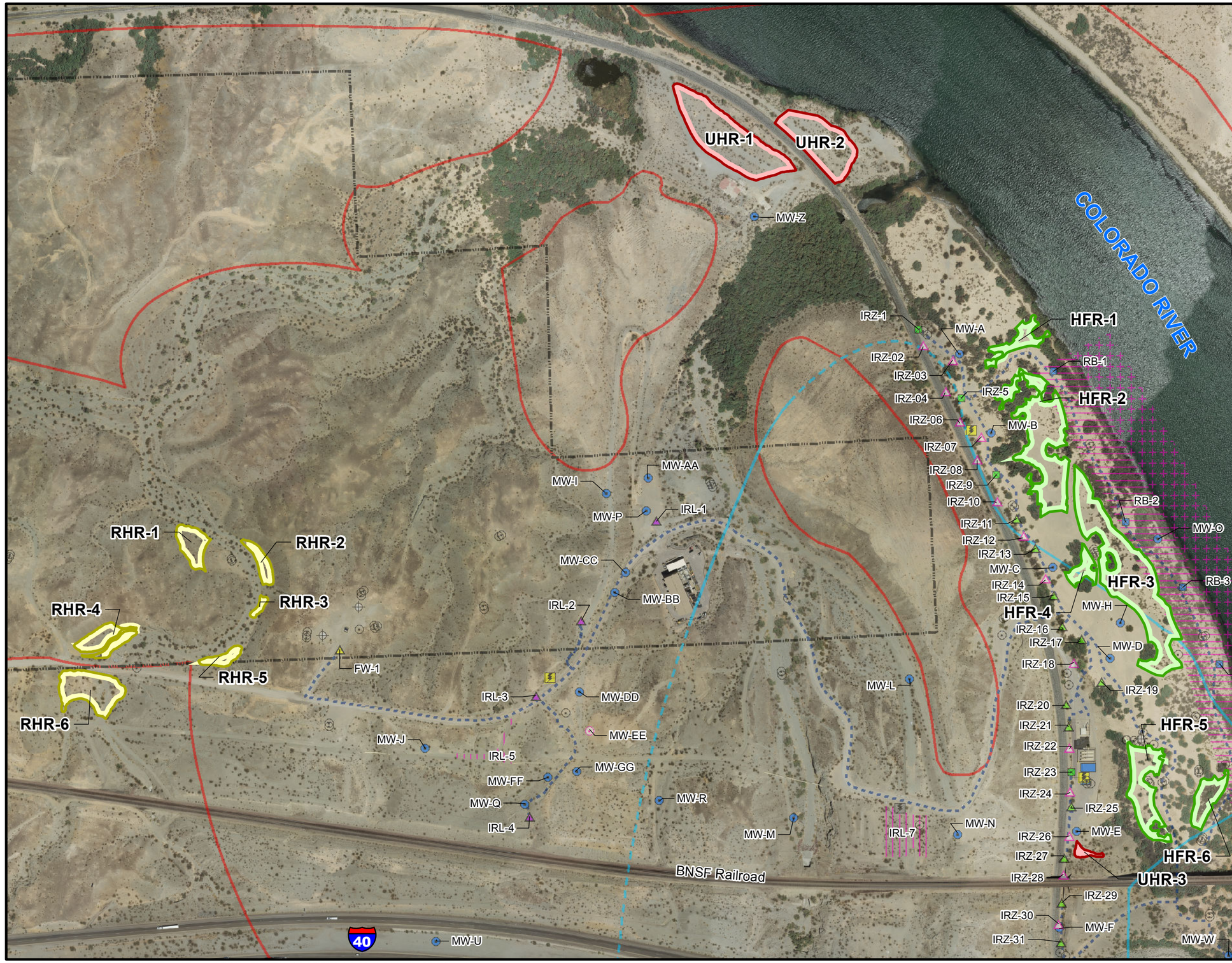

LEGEND

Proposed Revegetation Area
- Historical Floodplain Revegetation
- Riparian Habitat Revegetation
- Upland Habitat Revegetation
- Property Boundaries
- EIR Project Area

Existing Wells:
- Extraction Well
- Injection Well
- Monitoring Well

Provisional Wells:
(Items in Pink are Provisional)
- Injection Well
- Monitoring Well
- Area for Potential Slant Well Screens
- Area for Inner Recirculation Loop (IRL) Wells
- Area for River Bank Extraction Wells

Planned Wells:
- Extraction, NTH IRZ
- Extraction, Riverbank
- Injection, Freshwater
- Injection, Inner Recirculation Loop
- Injection, NTH IRZ
- Remedy Monitoring Well

Pipeline Corridor for Remedy
- Underground Pipe/Conduit

Remedy Facilities
- Planned Transformer
- Future Provisional Transformer
- Proposed Remedy Structure
- Approximate extent of hexavalent chromium [Cr(VI)] concentrations exceeding 32 micrograms per liter (µg/L) at any depth ingroundwater based on fourth quarter 2013 sampling events. Dashed where based on limited data.

Note:
1. Note that in compliance with EIR mitigation measure CUL-1a-9, as well as PA and CHPMP measures, the design of the pipeline to be located along the dirt road west of National Trails Hwy gives priority to previously disturbed areas, as that location is an existing, previously disturbed access road. In addition, the proposed location of the pipeline and the location of the existing road was field verified and its use would not create any direct physical impact or effect on the Topock Maze as it is manifested archaeologically, in compliance with EIR mitigation measure CUL-1a-10, PA, and CHPMP measures.
2. All well and structure locations are approximate.

0 150 300 600
Feet

N

FIGURE 5.4-1
POTENTIAL REVEGETATION AND MITIGATION PLANTING AREAS
SUPPLEMENTAL PRE-FINAL (90%) DESIGN SUBMITTAL
FOR THE FINAL GROUNDWATER REMEDY
PG&E TOPOCK COMPRESSOR STATION,
NEEDLES, CALIFORNIA

CH2MHILL

Path: \\zinfandel\Proj\PacificGasElectricCo\TopockProgram\GIS\MapFiles\2014\REVEG\FIG5_4-1_90pct_CAdetails_REVEG.mxd

The areas were selected along existing or proposed access routes to facilitate future planting, monitoring and maintenance. They are also located outside of the groundwater remedy construction footprint and away from existing/planned infrastructure in order to avoid future impacts during decommissioning and removal of the remedy infrastructure. Further, it is intended that mitigation plantings would mimic the natural spacing and patterns of the surrounding vegetation; therefore, mitigation plantings are located within the sparsely vegetated areas between existing perennial vegetation. The existing vegetation would not be affected during mitigation planting and maintenance and use of mechanical equipment in these areas will be kept to a minimum.

Preliminary ecological and environmental information including size, accessibility, visibility, soil type, existing vegetation characteristics, and sensitive resources for the revegetation areas was collected during a site visit by CH2M HILL plant ecologist Russell Huddleston and wetland scientist Steve Long on November 20, 2014. The findings of this preliminary assessment are presented in the technical memorandum included in Appendix V (note that the V designation was assigned to this appendix so that it can be inserted sequentially into the C/RAWP at the 100% design stage).

5.5 Construction, Staging, and Soil Storage Areas

In compliance with the Agencies' December 23, 2014 directive letter (DOI and DTSC 2014b), PG&E has prepared a technical memorandum that provides clarification on the construction/staging/soil storage terminology and detailed descriptions of the proposed use of eleven areas still under discussion with the Tribes (namely, Areas 6, 7, 11, 12, 13, 15, 16, 17, 19, 20, and 25) as well as justification for the necessity of using these areas during construction and remedy implementation. This memorandum is included in Appendix W of this Supplemental 90% document (note that the letter W was assigned to this appendix so that it can be inserted sequentially into the C/RAWP at the 100% design stage).

5.6 Enhanced Pipeline Maintenance Provisions

The September 2014 90% submittal (Section 5 of Volume 1, Operation and Maintenance Plan, of the O&M Manual) included pipeline cleanouts and blow-offs along the piping network to facilitate maintenance. Pipe cleanouts are intended to provide access to the pipe for cleanout of blockages and pipe blow-offs are typically provided at low points to allow for removal of solids that settle at the bottom of the pipe. In addition, a clean-in-place (CIP) system is included in the design of the National Trails Highway (NTH) In Situ Reactive Zone (IRZ) to facilitate the maintenance of groundwater pipelines by allowing for addition of maintenance additives, over a short duration, to remove the collected materials in the pipelines that may impact remedy performance. For the freshwater pipeline, a sand separator is included at the wellhead to minimize the amount of sand in the water and thereby minimize solids settle-out at the bottom of the downstream conveyance pipe.

After submittal of the September 2014 90% design, PG&E further evaluated the pipeline maintenance approach and identified the following enhancements:

- The addition of maintenance additives for short durations to remove collected materials in the pipelines, as included in the NTH IRZ using the CIP system, may be necessary for any remedy piping.
- Access to remedy piping, such as that provided by the pipeline cleanouts and blowoffs, should specifically allow for pipeline cleaning using the following methods in addition to short-duration chemical addition:
  - **Flushing** – Flushing involves controlling water flow direction and velocity in order to re-suspend settled solid deposits and flush them from the pipeline.
  - **Pigging** – Pigging involves the use of pressure to propel a pipeline pig device (for HDPE piping typically a cylindrical foam and plastic device) through the pipeline in order to scrape/scrub the pipe surfaces and push loosened materials to a pre-determined recovery point.

Procedures for implementation of the above maintenance methods are detailed in the conveyance system inspection and maintenance SOP (PIPE-SOP-01) provided in Appendix L. Additional preventative maintenance measures may be employed, including pH adjustment to control potential scale formation. pH adjustment involves the continuous dosing of acid (e.g., hydrochloric acid or other acids included in Exhibit 5.1-1 of Volume 1 of the O&M Manual) at low concentrations into the conveyed water to depress pH to a level that would suppress the formation of mineral scales, such as calcite. The adjusted pH is expected to remain circumneutral (i.e., pH between 5.5 and 7.4).

The enhanced pipeline maintenance approach will include design modifications as summarized below and as shown on the new Figure 5.6-1 on the next page. Design detail and information on engineered modifications to the 90% design footprint will be presented at the final (100%) design stage.

- Pipeline A will require the installation of a new vault near the junction of Pipe Sections A2 and A8. This vault will serve three purposes to maximize function and minimize space: 1) serve as a pigging station; 2) provide connecting piping to recirculate chemical solutions for maintenance; and 3) serve as a tie-in to provisional injection well IRL-5, if this well is determined to be necessary in the future. The dimensions of the new vault are approximately 9 ft by 13 ft by 6.5-ft maximum depth, which will be located within the existing footprint of the access road.
- Pipeline H will require the installation of a new vault (approximately 6 ft by 7 ft by 5-ft maximum depth) upstream of the IRL-4 metering vault and within the current projected trench footprint. PG&E evaluated whether the planned IRL-4 metering vault can accommodate the additional required maintenance features. This would require the single vault to be enlarged to a size that would require larger equipment to open or remove the lid during O&M; therefore, a second vault was added.
- Pipeline C (north of the MW-20 Bench) will require enlarging the lateral dimensions of the planned 5-ft by 5-ft vault for future provisional well IRZ-2 located at Station 10+39 along Pipe Section C2 to approximately 6 ft by 9 ft. The enlarged vault will be located within the current projected trench footprint to include pipeline maintenance features.

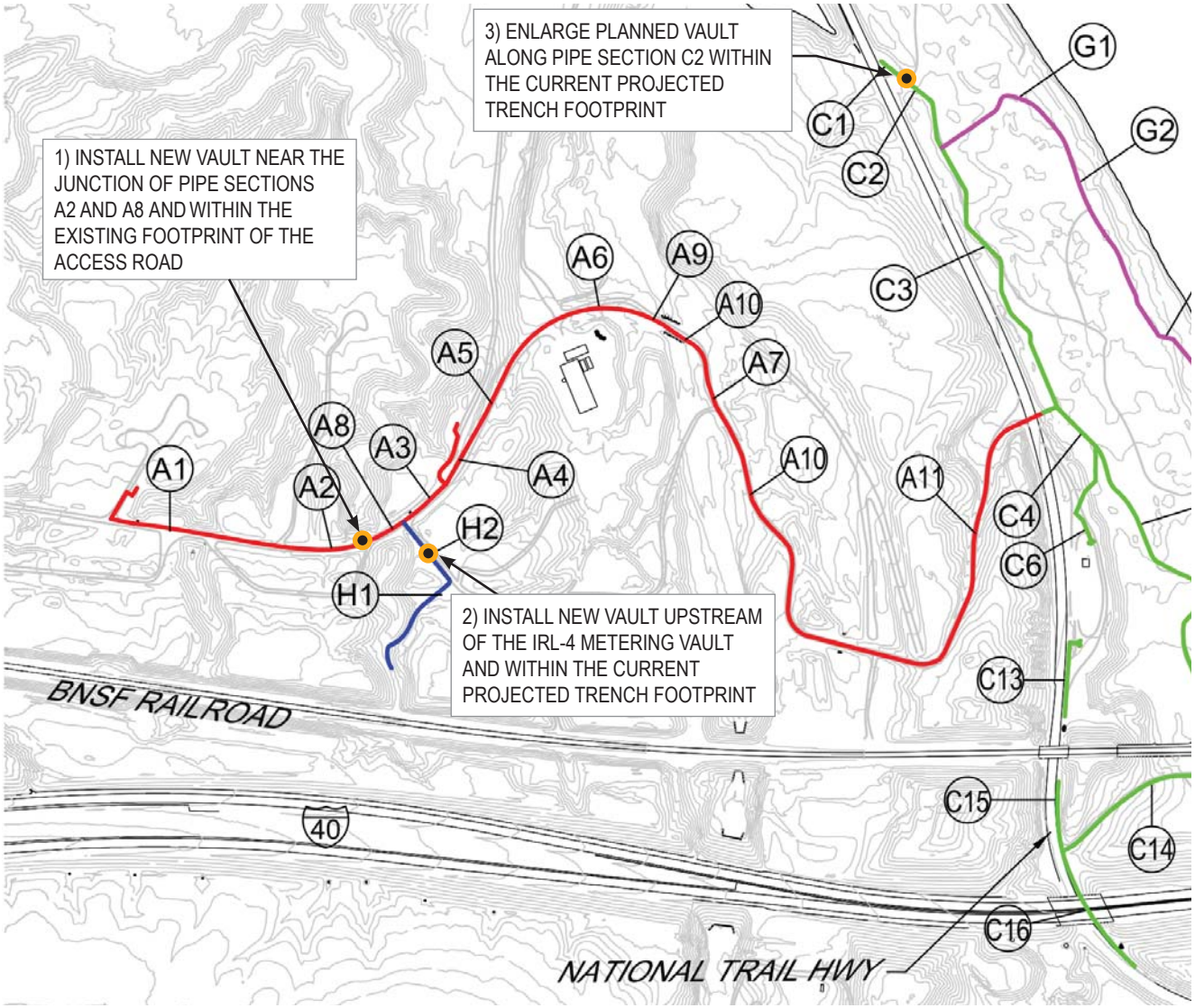

LEGEND

- UNDERGROUND PIPE
- PIPELINE "A"
- PIPELINE "C"
- PIPELINE "H"

NOTES:

1. Pipeline A will require the installation of a new vault near the junction of Pipe Sections A2 and A8. This vault will serve three purposes to maximize function and minimize space: 1) serve as a pigging station; 2) provide connecting piping to recirculate chemical solutions for maintenance; and 3) serve as a tie-in to provisional injection well IRL-5, if this well is determined to be necessary in the future. The dimensions of the new vault are approximately 9 feet by 13 feet by 6.5-foot maximum depth, which will be located within the existing footprint of the access road.
2. Pipeline H will require the installation of a new vault (approximately 6 feet by 7 feet by 5-foot maximum depth) upstream of the IRL-4 metering vault and within the current projected trench footprint. PG&E evaluated whether the planned IRL-4 metering vault can accommodate the required maintenance features. This would require the single vault to be enlarged to a size that would require larger equipment to open or remove the lid during O&M, therefore, a second vault was added.
3. Pipeline C (north of the MW-20 Bench) will require enlarging the lateral dimensions of the planned 5-foot by 5-foot future provisional IRZ-2 vault located at Station 10+39 along Pipe Section C2 to approximately 6 feet by 9 feet. The vault will be located within the current projected trench footprint to include pipeline maintenance features.

FIGURE 5.6-1
PIPELINE MAINTENANCE VAULTS
SUPPLEMENTAL PRE-FINAL (90%) DESIGN SUBMITTAL
FOR THE FINAL GROUNDWATER REMEDY,
PG&E TOPOCK COMPRESSOR STATION,
NEEDLES, CALIFORNIA

CH2MHILL®

SECTION 6

References

California Department of Toxic Substances Control (DTSC). 2011. *Final Environmental Impact Report for the Topock Compressor Station Groundwater Remediation Project*. January 31.

California Department of Fish and Wildlife (CDFW). 2013. Letter from Chris Hayes/CDFW, Deputy Regional Manager, Inland Deserts Region, to Ms. Yvonne Meeks/PG&E. Subject: Confirmation of Application of the CERCLA 121(e)(1) Permit Exemption to PG&E's Soil and Groundwater Investigation and Remediation Project. March 6.

California Regional Water Quality Control Board, Colorado River Basin Region (RWQCB). 2004. Order No. R7-2004-0080, Waste Discharge Requirements for Pacific Gas and Electric Company, Owner/Operator Topock Compressor Station and Groundwater Remediation Facility.

CH2M HILL. 2014a. *Basis of Design Report/Pre-Final (90%) Design Submittal for the Final Groundwater Remedy, PG&E Topock Compressor Station, Needles, California.* Prepared for Pacific Gas & Electric Company. September 8.

_____. 2014b. *Construction/Remedial Action Work Plan for the Final Groundwater Remedy, PG&E Topock Compressor Station, Needles, California.* Prepared for Pacific Gas & Electric Company. September 8.

U.S. Department of the Interior (DOI). 2010. *Groundwater Record of Decision, Pacific Gas and Electric Company, Topock Compressor Station, Needles, San Bernardino County, California*. ROD cover date is December 2010; signed/approved by DOI on January 20, 2011.

_____. 2013. Remedial Action/Remedial Design Consent Decree (CD) between the United States of America and Pacific Gas & Electric Company. Case 5:13-cv-00074-BRO-OP, Document 23. Entered November 21.

U.S. Department of the Interior (DOI) and California Department of Toxic Substances Control (DTSC). 2014a. Subject: Directives on Incomplete Elements Identified in the Pre-Final (90%) Basis of Design Report and Construction/Remedial Action Work Plan for the Groundwater Remediation Project at the Pacific Gas and Electric Company (PG&E), Topock Compressor Station. Letter from Aaron Yue/DTSC and Pamela Innis/DOI to Yvonne Meeks/PG&E. October 21.

_____.2014b. Subject: Directives on Outstanding Issues on the Pre-Final (90%) Basis of Design Supplemental Package for the PG&E Topock Compressor Station Remediation Site. Letter from Aaron Yue/DTSC and Pamela Innis/DOI to Yvonne Meeks/PG&E. December 23.

Tables

Updated tables for the:

- Basis of Design Report Submittal for the Final Groundwater Remedy
- Construction/Remedial Action Work Plan for the Final Groundwater Remedy

BOD Report Tables

TABLE ES-1 **FOR BREVITY, ONLY REVISED PORTIONS OF TABLE SHOWN HERE; REVISED INFORMATION SHOWN IN RED**
Summary of Engineering Design Parameters and Key Remedy Features
Groundwater Remedy Basis of Design Report/Pre-Final (90%) Design
PG&E Topock Compressor Station, Needles, California

Remedy Feature	Design Parameters/Quantity	Location
Supporting facilities during remedy operation and maintenance	• The primary power supply source for remedy facilities in California will be power generated by the TCS. Two new natural gas engine-driven generators with associated switchgear and auxiliary systems will be installed in the existing Auxiliary Building, which houses the existing generators and generator switchgear. This location was selected due to its close proximity to the existing generators and the remedy system. A new power supply conduit will run underground from the electrical switchgear inside the Auxiliary Building to a connection point outside the nearby Remedy-produced Water Conditioning Building. The existing switchgear in the existing Auxiliary Building will be replaced/enhanced with new switchgear to enable full integration with the existing equipment and increase power reliability for the remediation facilities. To free up the space for the new generators to be installed inside the Auxiliary Building, the existing air compressors will be consolidated with the existing air dryer in a new Air Compressor Building located just to the east of their current location. This new air compressor location is preferred by the compressor station staff for ease of operation and maintenance of both the power and the compressed air systems. • Primary power will be supplied at 480 volts alternating current (VAC) and will be stepped up to 12K VAC with a 1,000-kilovolt-ampere (kVA) transformer; a step-down transformer (225 to 300kVA) will return the voltage to 480 VAC 3 phase at each load center. Six load centers are planned with a transformer/distribution equipment at each one. The transformers will be mounted aboveground on shallow concrete foundations. • The primary power source for the TCS evaporation ponds in California will be power generated on-site. One new natural gas-fueled reciprocating internal combustion engine (RICE) electrical power generator and associated auxiliary systems will be installed in a new enclosed utility building (approx. 425 sq. ft.) located within the TCS evaporation ponds fence line. Auxiliary equipment (e.g., lighting, controls, sensors, security cameras, and valve actuators) will be supplied with 24-volt direct current (VDC) power by new thermoelectric generators (TEGs). The TEGs will be installed in a security fenced area (approx. 500 sq. ft.) adjacent to the new utility building. Natural gas for the new generators will be piped from PG&E's natural gas Line 300B, located approximately 500 feet away. • A portable, rental backup generator of similar make and model to the existing generator (Isuzu Model 6WG1X) will be mobilized onsite as needed during project implementation to provide power. A connection panel is included in the 90% design (see Appendix D, Drawing E-00-51, Detail 4) and space is reserved for the portable rental generator behind the Remedy-produced Water Conditioning Plant (see Figures ES-4A and 3.5-1). • Secondary power supply can also be power generated from small photovoltaic solar panels at various locations such as at the Operations Building at the Transwestern (TW) Bench and at select remote well locations. • For the primary freshwater supply well (HNWR-1A), the secondary supply well (HNWR-1), and the contingent well (Site B) in Arizona, the power supply source will be power provided by Mojave Electric Cooperative. • One Remedy-produced Water Conditioning System[2] and associated tanks located at the Compressor Station – flowrate is 20 gpm average, 35 gpm maximum (see Exhibit 3.4-5 for details). Space is reserved for a Contingent Dissolved Metals Removal System (DMRS)[3] inside the Remedy-produced Water Conditioning Plant -flowrate is 20 gpm average, 35 gpm maximum (see O&M Manual Volume 3, Contingency Plan, for details).	See Figures ES-4A through 4D for general location. See Figures ES-6 through ES-12 for photo simulations of select remedy facilities

TABLE ES-1 **FOR BREVITY, ONLY REVISED PORTIONS OF TABLE SHOWN HERE; REVISED INFORMATION SHOWN IN RED**
Summary of Engineering Design Parameters and Key Remedy Features
Groundwater Remedy Basis of Design Report/Pre-Final (90%) Design
PG&E Topock Compressor Station, Needles, California

Remedy Feature	Design Parameters/Quantity	Location
	• One Operations Building (approx. 1,480 sq.ft.) to house all essential functions for long-term O&M (Supervisory Control and Data Acquisition [SCADA] system, programmable logic controllers (PLCs), uninterruptible power supply, communications, etc.) at the TW Bench. Space is reserved in the Operations Building for a small, packaged drinking/potable water system.[4] Shared use of existing TW Bench with Transwestern. • One long-term remedy support area (approx. 1.3 acres), one soil processing area (approx. 1.55 acres), and one soil storage area (approx. 1.55 acres) in Moabi Regional Park. Details on activities/functions anticipated during the long-term O&M period are included in Section 3.5-3. Details on activities/functions anticipated during the construction period are included in the Construction/Remedial Action Work Plan (CH2M HILL 2014m). • Shared use of the Compressor Station Hazardous Material Storage Building with TCS. • Improvements at the TCS evaporation ponds to improve evaporation rate[5] and to minimize trucking offsite. In the event that trucking offsite is necessary during remedy operations, the existing truck loading station will also be improved to enhance the ability to pump pond water to tanker trucks (see footnote of Exhibit 3.4-2 for details).	
Other ancillary facilities for use during remedy operation and maintenance	• One aboveground pipe bridge crosses the southern portion of the wash near the TCS. • Small photovoltaic solar panels at various locations such as at the Operations Building at the TW Bench, at Moabi Regional Park facilities, and at select remote well locations. Small communication radios at remote monitoring well locations, freshwater supply well in Arizona, and equipment at the TCS ponds to allow for remote data collection. • Security equipment (e.g., gate, security cameras) for remote facilities.	See Figure ES-4A for general locations of the pipe bridge.

TABLE ES-2B (ALSO C/RAWP EXHIBIT 3.1-2B) **REVISED INFORMATION SHOWN IN RED FONT**

Estimated Borehole Count Associated with Well Construction: Count Details

Groundwater Remedy Basis of Design Report/Pre-Final (90%) Design

PG&E Topock Compressor Station, Needles, California

Item	Location Name	Well Type	Added in 90% BOD	Status	Est. # of Well Screen Intervals	Calculated # of Boreholes	Number of Boreholes Installed	Est. # of Planned Boreholes	Est. # of Future Provisional Boreholes
1	ER-TCS GW Investigation	Monitoring	No	Installed	--	--	16	--	--
2	MW-10D	Monitoring	Yes	Planned	1	1	--	1	0
3	MW-11D	Monitoring	Yes	Planned	1	1	--	1	0
4	MW-70BR-D	Monitoring	Yes	Planned	1	1	--	1	0
5	MW-A	Monitoring	No	Planned	4	2	--	2	0
6	MW-B	Monitoring	No	Planned	4	2	--	2	0
7	MW-C	Monitoring	No	Planned	4	2	--	2	0
8	MW-D	Monitoring	No	Planned	3	2	--	2	0
9	MW-E	Monitoring	No	Planned	2	1	--	1	0
10	MW-F	Monitoring	No	Planned	2	1	--	1	0
11	MW-G	Monitoring	No	Planned	1	1	--	1	0
12	MW-H	Monitoring	No	Planned	4	2	--	2	0
13	MW-I	Monitoring	No	Planned	4	2	--	2	0
14	MW-J	Monitoring	No	Planned	4	2	--	2	0
15	MW-K	Monitoring	No	Planned	1	1	--	1	0
16	MW-L	Monitoring	No	Planned	4	2	--	2	0
17	MW-M	Monitoring	No	Planned	4	2	--	2	0
18	MW-N	Monitoring	No	Planned	3	2	--	2	0
19	MW-O	Monitoring	No	Planned	4	2	--	2	0
20	MW-P	Monitoring	No	Planned	4	2	--	2	0
21	MW-Q	Monitoring	No	Planned	4	2	--	2	0
22	MW-R	Monitoring	No	Planned	4	2	--	2	0
23	MW-S	Monitoring	No	Planned	2	1	--	1	0
24	MW-T	Monitoring	Yes	Planned	TBD	1	--	1	0
25	MW-U	Monitoring	Yes	Planned	2	1	--	1	0
26	MW-V	Monitoring	Yes	Future Provisional	2	1	--	0	1
27	MW-W	Monitoring	Yes	Planned	2	1	--	1	0
28	MW-X	Monitoring	Yes	Planned	4	2	--	2	0
29	MW-Y	Monitoring	Yes	Planned	4	2	--	2	0

TABLE ES-2B (ALSO C/RAWP EXHIBIT 3.1-2B) **REVISED INFORMATION SHOWN IN RED FONT**

Estimated Borehole Count Associated with Well Construction: Count Details

Groundwater Remedy Basis of Design Report/Pre-Final (90%) Design

PG&E Topock Compressor Station, Needles, California

Item	Location Name	Well Type	Added in 90% BOD	Status	Est. # of Well Screen Intervals	Calculated # of Boreholes	Number of Boreholes Installed	Est. # of Planned Boreholes	Est. # of Future Provisional Boreholes
30	MW-Z	Monitoring	Yes	Planned	4	2	--	2	0
31	MW-AA	Monitoring	Yes	Planned	2	1	--	1	0
32	MW-BB	Monitoring	Yes	Planned	2	1	--	1	0
33	MW-CC	Monitoring	Yes	Planned	2	1	--	1	0
34	MW-DD	Monitoring	Yes	Planned	2	1	--	1	0
35	MW-EE	Monitoring	Yes	Future Provisional	2	1	--	0	1
36	MW-FF	Monitoring	Yes	Planned	2	1	--	1	0
37	MW-GG	Monitoring	Yes	Planned	2	1	--	1	0
38	MW-HH	Monitoring	Yes	Planned	2	1	--	1	0
39	MW-II	Monitoring	Yes	Planned	2	1	--	1	0
40	Slant Wells Under River	Monitoring	Yes	Future Provisional	TBD	2	--	0	2
41	10 Unidentified MW Locations	Monitoring	Yes	Future Provisional	4 (per location)	20	--	0	20
42	Site B	Remediation	Yes	Installed	--	--	1	--	--
43	HWNR-1A	Remediation	Yes	Installed	--	--	1	--	--
44	ER-1	Remediation	No	Planned	1	1	--	1	0
45	ER-2	Remediation	No	Planned	1	1	--	1	0
46	ER-3	Remediation	No	Planned	1	1	--	1	0
47	ER-4	Remediation	No	Planned	1	1	--	1	0
48	ER-5	Remediation	No	Future Provisional	1	1	--	0	1
49	ER-6	Remediation	No	Installed	0	0	(Included in Item 1)	0	0
50	ER-7	Remediation	Yes	Future Provisional	1	1	--	0	1
51	ER-8	Remediation	Yes	Future Provisional	1	1	--	0	1
52	ER-9	Remediation	Yes	Future Provisional	1	1	--	0	1
53	ER-10	Remediation	Yes	Future Provisional	1	1	--	0	1
54	ER-11	Remediation	Yes	Future Provisional	1	1	--	0	1
55	FW-1	Remediation	No	Planned	1	1	--	1	0
56	FW-2	Remediation	No	Planned	1	1	--	1	0
57	IRL-1	Remediation	No	Planned	1	1	--	1	0

TABLE ES-2B (ALSO C/RAWP EXHIBIT 3.1-2B) **REVISED INFORMATION SHOWN IN RED FONT**

Estimated Borehole Count Associated with Well Construction: Count Details

Groundwater Remedy Basis of Design Report/Pre-Final (90%) Design

PG&E Topock Compressor Station, Needles, California

Item	Location Name	Well Type	Added in 90% BOD	Status	Est. # of Well Screen Intervals	Calculated # of Boreholes	Number of Boreholes Installed	Est. # of Planned Boreholes	Est. # of Future Provisional Boreholes
58	IRL-2	Remediation	No	Planned	1	1	--	1	0
59	IRL-3	Remediation	No	Planned	1	1	--	1	0
60	IRL-4	Remediation	No	Planned	1	1	--	1	0
61	IRL-5	Remediation	No	Future Provisional	1	1	--	0	1
62	IRL-6	Remediation	No	Future Provisional	1	1	--	0	1
63	IRL-7	Remediation	No	Future Provisional	1	1	--	0	1
64	IRZ-01	Remediation	No	Planned	1	1	--	1	0
65	IRZ-02	Remediation	No	Future Provisional	4	2	--	0	2
66	IRZ-03	Remediation	No	Future Provisional	4	2	--	0	2
67	IRZ-04	Remediation	No	Future Provisional	4	2	--	0	2
68	IRZ-05	Remediation	No	Planned	2	1	--	1	0
69	IRZ-06	Remediation	No	Future Provisional	4	2	--	0	2
70	IRZ-07	Remediation	No	Future Provisional	4	2	--	0	2
71	IRZ-08	Remediation	No	Future Provisional	4	2	--	0	2
72	IRZ-09	Remediation	No	Planned	2	1	--	1	0
73	IRZ-10	Remediation	No	Future Provisional	4	2	--	0	2
74	IRZ-11	Remediation	No	Planned	4	2	--	2	0
75	IRZ-12	Remediation	No	Future Provisional	4	2	--	0	2
76	IRZ-13	Remediation	No	Planned	4	2	--	2	0
77	IRZ-14	Remediation	No	Future Provisional	4	2	--	0	2
78	IRZ-15	Remediation	No	Planned	4	2	--	2	0
79	IRZ-16	Remediation	No	Planned	4	2	--	2	0
80	IRZ-17	Remediation	No	Planned	4	2	--	2	0
81	IRZ-18	Remediation	No	Future Provisional	4	2	--	0	2
82	IRZ-19	Remediation	No	Planned	4	2	--	2	0
83	IRZ-20	Remediation	No	Planned	4	2	--	2	0
84	IRZ-21	Remediation	No	Planned	4	2	--	2	0
85	IRZ-22	Remediation	No	Future Provisional	4	2	--	0	2
86	IRZ-23	Remediation	No	Planned	1	1	--	1	0

TABLE ES-2B (ALSO C/RAWP EXHIBIT 3.1-2B) **REVISED INFORMATION SHOWN IN RED FONT**

Estimated Borehole Count Associated with Well Construction: Count Details

Groundwater Remedy Basis of Design Report/Pre-Final (90%) Design

PG&E Topock Compressor Station, Needles, California

Item	Location Name	Well Type	Added in 90% BOD	Status	Est. # of Well Screen Intervals	Calculated # of Boreholes	Number of Boreholes Installed	Est. # of Planned Boreholes	Est. # of Future Provisional Boreholes
87	IRZ-24	Remediation	No	Future Provisional	2	1	--	0	1
88	IRZ-25	Remediation	No	Planned	2	1	--	1	0
89	IRZ-26	Remediation	No	Future Provisional	2	1	--	0	1
90	IRZ-27	Remediation	No	Planned	2	1	--	1	0
91	IRZ-28	Remediation	No	Future Provisional	2	1	--	0	1
92	IRZ-29	Remediation	No	Planned	2	1	--	1	0
93	IRZ-30	Remediation	No	Future Provisional	2	1	--	0	1
94	IRZ-31	Remediation	No	Planned	2	1	--	1	0
95	IRZ-32	Remediation	No	Future Provisional	2	1	--	0	1
96	IRZ-33	Remediation	No	Planned	2	1	--	1	0
97	IRZ-34	Remediation	No	Future Provisional	1	1	--	0	1
98	IRZ-35	Remediation	No	Planned	1	1	--	1	0
99	IRZ-36	Remediation	No	Future Provisional	1	1	--	0	1
100	IRZ-37	Remediation	No	Planned	1	1	--	1	0
101	IRZ-38	Remediation	No	Future Provisional	1	1	--	0	1
102	IRZ-39	Remediation	No	Planned	1	1	--	1	0
103	IRZ-40	Remediation	No	Future Provisional	1	1	--	0	1
104	RB-1	Remediation	No	Planned	2	1	--	1	0
105	RB-2	Remediation	No	Planned	2	1	--	1	0
106	RB-3	Remediation	No	Planned	2	1	--	1	0
107	RB-4	Remediation	No	Planned	2	1	--	1	0
108	RB-5	Remediation	No	Planned	2	1	--	1	0
109	RB-6	Remediation	Yes	Future Provisional	2	1	--	0	1
110	RB-7	Remediation	Yes	Future Provisional	2	1	--	0	1
111	RB-8	Remediation	Yes	Future Provisional	2	1	--	0	1
112	RB-9	Remediation	Yes	Future Provisional	2	1	--	0	1
113	TCS-1	Remediation	No	Planned	2	1	--	1	0
114	TCS-2	Remediation	No	Planned	2	1	--	1	0
115	TWB-1	Remediation	No	Planned	1	1	--	1	0
116	TWB-2	Remediation	No	Planned	1	1	--	1	0

TABLE ES-2B (ALSO C/RAWP EXHIBIT 3.1-2B) **REVISED INFORMATION SHOWN IN RED FONT**

Estimated Borehole Count Associated with Well Construction: Count Details

Groundwater Remedy Basis of Design Report/Pre-Final (90%) Design

PG&E Topock Compressor Station, Needles, California

Item	Location Name	Well Type	Added in 90% BOD	Status	Est. # of Well Screen Intervals	Calculated # of Boreholes	Number of Boreholes Installed	Est. # of Planned Boreholes	Est. # of Future Provisional Boreholes
117	TWB-3	Remediation	No	Future Provisional	1	1	--	0	1
118	TWB-4	Remediation	No	Future Provisional	1	1	--	0	1

Key Assumptions:

1. Up to 2 well casings (screens) will be nested in each borehole at MW locations where there are multiple screens. The estimated number of screened intervals could change based on actual field conditions.

2. Remediation wells will be constructed with one well per borehole (this includes dual screen wells along the IRZ, for which some have up to 2 separate dual screen wells per location).

TABLE 3.6-1 **REVISED INFORMATION SHOWN IN RED FONT**

Preliminary Construction of Proposed Groundwater Monitoring Wells

Groundwater Remedy Basis of Design Report/Pre-Final (90%) Design

PG&E Topock Compressor Station, Needles, California

Monitoring Well Category / Location ID	Estimated Depth to Groundwater (ft bgs)	Estimated Saturated Thickness Above Bedrock (ft)	Estimated Depth to Bedrock (ft bgs)	Estimated Number of Intervals to be Monitored[1]	Estimated Length of Interval(s) to be Monitored (ft)[1]	Estimated Depths to be Monitored (ft bgs)[1]			
Northern NTH IRZ Extraction Monitoring Well									
MW-A	13	357	370	4	40	40 to 80	140 to 180	230 to 270	310 to 350
MW-B	17	327	344	4	40	40 to 80	130 to 170	220 to 260	290 to 330
NTH IRZ Dose Response Monitoring Well									
MW-C	22	197	219	4	20	30 to 50	80 to 100	130 to 150	180 to 200
MW-D	18	157	175	3	20	40 to 60	90 to 110	140 to 160	
MW-E	36	100	136	2	20	50 to 70	105 to 125		
MW-F	54	81	135	2	20	70 to 90	105 to 125		
MW-G	57	30	87	1	20	65 to 85			
NTH IRZ Downgradient Well and River Bank Extraction Monitoring Well									
MW-H	14	183	197	4	20	30 to 50	80 to 100	120 to 140	170 to 190
MW-W	16	27	43	1	20	20 to 40			
NTH IRZ River Bank Extraction Monitoring Well									
MW-O	1	253	254	4	40	20 to 60	80 to 120	140 to 180	200 to 240
MW-X	1	325	326	4	40	20 to 60	100 to 140	180 to 220	260 to 300
MW-Y	1	325	326	4	40	20 to 60	100 to 140	180 to 220	260 to 300
Slant wells [2]	0	262	262	2	40	150 to 190	210 to 250		
IRL Downgradient Monitoring Well									
MW-M	59	169	228	4	20	70 to 90	110 to 130	155 to 175	195 to 215
MW-R	100	185	285	4	20	115 to 135	160 to 180	205 to 225	250 to 270
IRL Dose Response Monitoring Well									
MW-P	51	275	326	4	30	75 to 105	140 to 170	210 to 240	285 to 315
MW-Q	105	195	300	4	30	110 to 140	160 to 190	210 to 240	260 to 290

TABLE 3.6-1 **REVISED INFORMATION SHOWN IN RED FONT**

Preliminary Construction of Proposed Groundwater Monitoring Wells

Groundwater Remedy Basis of Design Report/Pre-Final (90%) Design

PG&E Topock Compressor Station, Needles, California

Monitoring Well Category / Location ID	Estimated Depth to Groundwater (ft bgs)	Estimated Saturated Thickness Above Bedrock (ft)	Estimated Depth to Bedrock (ft bgs)	Estimated Number of Intervals to be Monitored[1]	Estimated Length of Interval(s) to be Monitored (ft)[1]	Estimated Depths to be Monitored (ft bgs)[1]			
IRL Byproduct Monitoring Well									
MW-I	67	278	345	4	30	85 to 115	55 to 185	220 to 250	300 to 330
MW-J	118	218	336	4	30	130 to 160	180 to 210	230 to 260	290 to 320
TCS Loop Transwestern Bench Extraction Monitoring Well									
MW-K	94	24	117	1	20	95 to 115			
East Ravine Extraction Monitoring Well									
MW-T	51	TBD	TBD	2	TBD	TBD			
MW-70BR-D	99	0	69	1	50	235 to 285			
Freshwater Injection Observation Well									
MW-S	13	149	162	2	40	30 to 70	100 to 140		
Compliance Monitoring Well - Inside Plume									
MW-L	76	177	253	4	20	90 to 110	140 to 160	180 to 200	220 to 240
MW-N	109	131	240	3	20	130 to 150	170 to 190	210 to 230	
MW-10D	95	105	200	1	20	170 to 190			
MW-11D	66	126	192	1	20	150 to 170			
Compliance Monitoring Well - Outside Plume									
MW-U	144	164	308	2	40	150 to 190	230 to 270		
MW-V [2]	96	89	185	1	40	120 to 160			
MW-Z	24	388	412	4	40	50 to 90	150 to 190	250 to 290	350 to 390
Arsenic Monitoring Well									
MW-AA	41	282	323	2	50	70 to 120	220 to 270		
MW-BB	73	261	334	2	50	90 to 140	220 to 270		
MW-CC	65	260	325	2	50	90 to 140	220 to 270		

TABLE 3.6-1 **REVISED INFORMATION SHOWN IN RED FONT**

Preliminary Construction of Proposed Groundwater Monitoring Wells

Groundwater Remedy Basis of Design Report/Pre-Final (90%) Design

PG&E Topock Compressor Station, Needles, California

Monitoring Well Category / Location ID	Estimated Depth to Groundwater (ft bgs)	Estimated Saturated Thickness Above Bedrock (ft)	Estimated Depth to Bedrock (ft bgs)	Estimated Number of Intervals to be Monitored[1]	Estimated Length of Interval(s) to be Monitored (ft)[1]	Estimated Depths to be Monitored (ft bgs)[1]	
MW-DD	105	230	335	2	50	120 to 170	220 to 270
MW-EE [2]	105	228	333	2	50	120 to 170	220 to 270
MW-FF	105	201	306	2	50	120 to 170	220 to 270
MW-GG	111	199	310	2	50	120 to 170	220 to 270
MW-HH	86	90	176	1	50	100 to 150	
MW-II	83	93	176	1	50	100 to 150	

Notes:

[1] The screened intervals as shown are preliminary, and are based on assumptions in the current site conceptual model (primarily the total projected thickness of the unconsolidated aquifer) as well as the specific purpose of the proposed monitoring location. The number, length, and depths of the monitoring intervals for each location will be finalized concurrently with fieldwork. These decisions will be based on additional information collected during construction of the remedy well network.

[2] Future provisional monitoring well location ["Pending" deleted]

Abbreviations

ft = feet
ft bgs = feet below ground surface
IRL = Inner Recirculation Loop
NTH IRZ - National Trails Highway In-Situ Reactive Zone
TBD = To Be Determined
TCS = Topock Compressor Station

C/RAWP Table

TABLE 3.2-5 **REVISED INFORMATION SHOWN IN RED FONT**

Estimated Construction of Proposed Groundwater Monitoring Wells

Groundwater Remedy Construction/Remedial Action Work Plan

PG&E Topock Compressor Station, Needles, California

Monitoring Category / Location ID	Projected Depth to Groundwater (ft bgs)	Projected Saturated Thickness Above Bedrock (ft)	Projected Depth to Bedrock (ft bgs)	Number of Intervals to be Monitored[a]	Length of Interval(s) to be Monitored (ft)[a]	Estimated Depths to be Monitored (ft bgs)[a]			
Northern NTH IRZ Extraction Monitoring Well									
MW-A	13	357	370	4	40	40 to 80	140 to 180	230 to 270	310 to 350
MW-B	17	327	344	4	40	40 to 80	130 to 170	220 to 260	290 to 330
NTH IRZ Dose Response Monitoring Well									
MW-C	22	197	219	4	20	30 to 50	80 to 100	130 to 150	180 to 200
MW-D	18	157	175	3	20	40 to 60	90 to 110	140 to 160	
MW-E	36	100	136	2	20	50 to 70	105 to 125		
MW-F	54	81	135	2	20	70 to 90	105 to 125		
MW-G	57	30	87	1	20	65 to 85			
NTH IRZ Downgradient Well and Riverbank Extraction Monitoring Well									
MW-H	14	183	197	4	20	30 to 50	80 to 100	120 to 140	170 to 190
MW-W	16	27	43	1	20	20 to 40			
NTH IRZ Riverbank Extraction Monitoring Well									
MW-O	1	253	254	4	40	20 to 60	80 to 120	140 to 180	200 to 240
MW-X	1	325	326	4	40	20 to 60	100 to 140	180 to 220	260 to 300
MW-Y	1	325	326	4	40	20 to 60	100 to 140	180 to 220	260 to 300
Slant wells *	0	262	262	2	40	150 to 190	210 to 250		
IRL Downgradient Monitoring Well									
MW-M	59	169	228	4	20	70 to 90	110 to 130	155 to 175	195 to 215
MW-R	100	185	285	4	20	115 to 135	160 to 180	205 to 225	250 to 270
IRL Dose Response Monitoring Well									
MW-P	51	275	326	4	30	75 to 105	140 to 170	210 to 240	285 to 315
MW-Q	105	195	300	4	30	110 to 140	160 to 190	210 to 240	260 to 290
IRL Byproduct Monitoring Well									
MW-I	67	278	345	4	30	85 to 115	55 to 185	220 to 250	300 to 330
MW-J	118	218	336	4	30	130 to 160	180 to 210	230 to 260	290 to 320
TCS Loop Transwestern Bench Extraction Monitoring Well									
MW-K	94	24	117	1	20	95 to 115			
East Ravine Extraction Monitoring Well									
MW-T	51	TBD	TBD	2	TBD	TBD			

TABLE 3.2-5 **REVISED INFORMATION SHOWN IN RED FONT**

Estimated Construction of Proposed Groundwater Monitoring Wells

Groundwater Remedy Construction/Remedial Action Work Plan

PG&E Topock Compressor Station, Needles, California

Monitoring Category / Location ID	Projected Depth to Groundwater (ft bgs)	Projected Saturated Thickness Above Bedrock (ft)	Projected Depth to Bedrock (ft bgs)	Number of Intervals to be Monitored[a]	Length of Interval(s) to be Monitored (ft)[a]	Estimated Depths to be Monitored (ft bgs)[a]			
MW-70BR-D	99	0	69	1	50	235 to 285			
Freshwater Injection Observation Well									
MW-S	13	149	162	2	40	30 to 70	100 to 140		
Compliance Monitoring Well - Inside Plume									
MW-L	76	177	253	4	20	90 to 110	140 to 160	180 to 200	220 to 240
MW-N	109	131	240	3	20	130 to 150	170 to 190	210 to 230	
MW-10D	95	105	200	1	20	170 to 190			
MW-11D	66	126	192	1	20	150 to 170			
Compliance Monitoring Well - Outside Plume									
MW-U	144	164	308	2	40	150 to 190	230 to 270		
MW-V *	96	89	185	1	40	120 to 160			
MW-Z	24	388	412	4	40	50 to 90	150 to 190	250 to 290	350 to 390
Arsenic Monitoring Well									
MW-AA	41	282	323	2	50	70 to 120	220 to 270		
MW-BB	73	261	334	2	50	90 to 140	220 to 270		
MW-CC	65	260	325	2	50	90 to 140	220 to 270		
MW-DD	105	230	335	2	50	120 to 170	220 to 270		
MW-EE *	105	228	333	2	50	120 to 170	220 to 270		
MW-FF	105	201	306	2	50	120 to 170	220 to 270		
MW-GG	111	199	310	2	50	120 to 170	220 to 270		
MW-HH	86	90	176	1	50	100 to 150			
MW-II	83	93	176	1	50	100 to 150			

Notes:

[a] The screened intervals as shown are preliminary, and are based on assumptions in the current site conceptual model (primarily the total projected thickness of the unconsolidated aquifer) as well as the specific purpose of the proposed monitoring location. The number, length, and depths of the monitoring intervals for each location will be finalized concurrent with fieldwork. These decisions will be based on additional information collected during construction of the remedy well network.

Abbreviations:

TBD = To Be Determined

* = Future provisional monitoring well

Change at MW-CC = removed "*" as MW-CC is a planned well, not a future provisional well. This is not a change in well status but was merely a typographical error in the C/RAWP.

Change at Slant Wells = added "*" as all potential slant well locations are future provisional. This is not a change in well status but was merely a typographical error in the C/RAWP.

Figures

Updated and new figures for the:

- Basis of Design Report Submittal for the Final Groundwater Remedy
- Construction/Remedial Action Work Plan for the Final Groundwater Remedy

BOD Report Figures

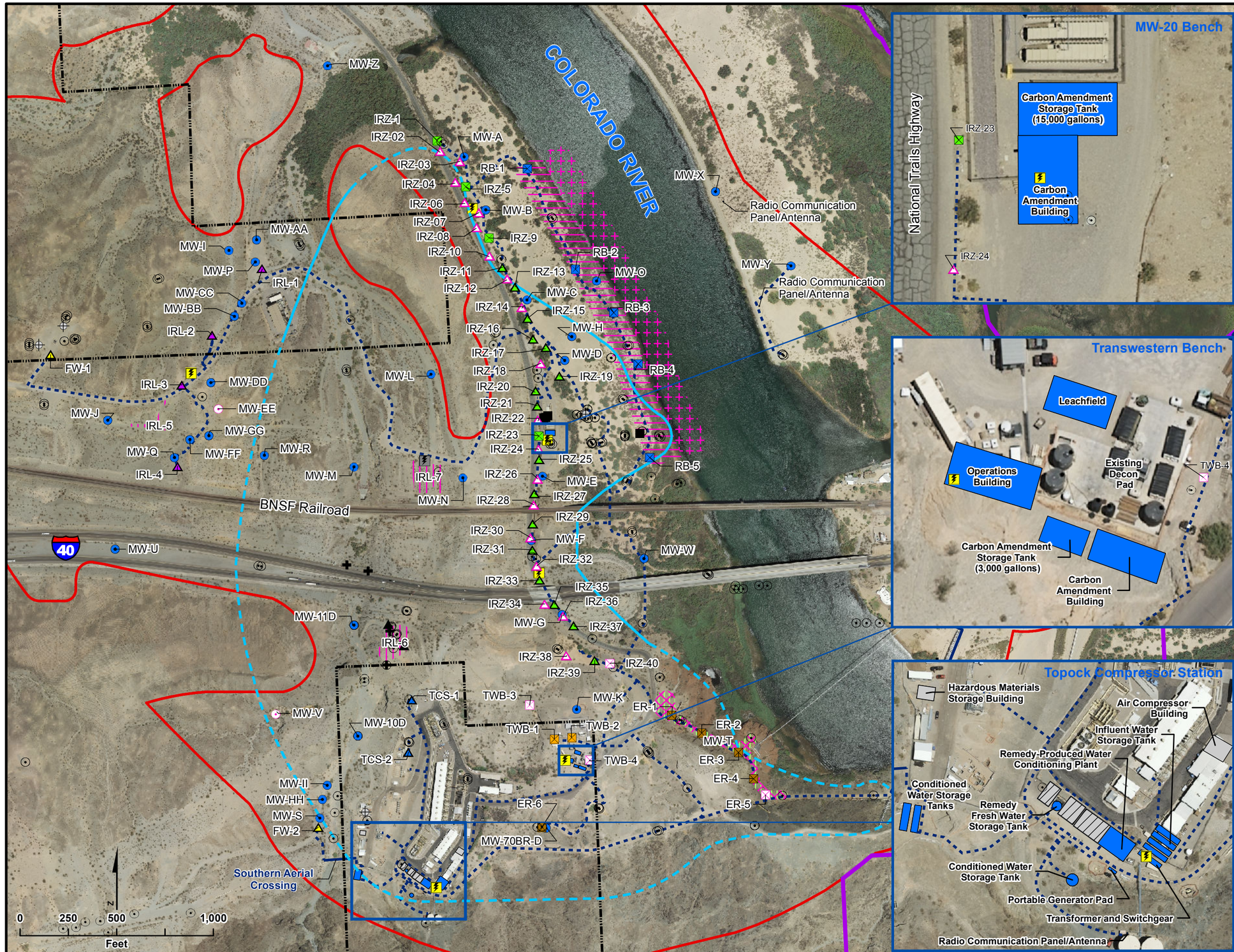

LEGEND

- Property Boundaries
- Area of Potential Effects (APE)
- EIR Project Area

Existing Wells:

- Extraction Well
- Injection Well
- Monitoring Well
- Water Supply Well

Provisional Wells:

(Items in Pink are Provisional)

- Extraction Well
- Injection Well
- Monitoring Well
- Area for East Ravine (ER) Well (ER-7 to ER-11)
- Area for Potential Slant Well Screens
- Area for Inner Recirculation Loop (IRL) Wells
- Area for River Bank Extraction Wells

Planned Wells:

- Extraction, East Ravine
- Extraction, National Trails Highway (NTH) In-situ Reactive Zone (IRZ)
- Extraction, Riverbank
- Extraction, Transwestern Bench
- Injection, Freshwater
- Injection, Inner Recirculation Loop
- Injection, NTH IRZ
- Injection, Topock Compressor Station
- Remedy Monitoring Well
- Recirculation Well
- Area for Monitoring Well MW-T

Pipeline Corridor for Remedy

- Aboveground Pipe
- Underground Pipe/Conduit

Remedy Facilities

- Planned Transformer
- Future Provisional Transformer
- Proposed Remedy Structure
- Contingent Freshwater Pre-injection Treatment System
- New Compressor Station buildings (not part of Remedy)
- Approximate extent of hexavalent chromium [Cr(VI)] concentrations exceeding 32 micrograms per liter (µg/L) at any depth ingroundwater based on fourth quarter 2013 sampling events. Dashed where based on limited data.

Note:

1. Note that in compliance with EIR mitigation measure CUL-1a-9, as well as PA and CHPMP mitigation measures, the pipeline along the dirt road west of National Trails Hwy is located in an existing, previously disturbed, access road. In addition, the location of the road and pipeline was field verified and does not create any direct physical impact or effect on the Topock Maze, as it is manifested archaeologically, in compliance with EIR mitigation measure CUL-1a-10, PA, and CHPMP mitigation measures.
2. All well and structure locations are approximate.

FIGURE ES-4A
GENERAL REMEDY SYSTEM LAYOUT - CALIFORNIA

SUPPLEMENTAL PRE-FINAL (90%) DESIGN SUBMITTAL
FOR THE FINAL GROUNDWATER REMEDY
PG&E TOPOCK COMPRESSOR STATION,
NEEDLES, CALIFORNIA

CH2MHILL

Path: \\zinfandel\Proj\PacificGasElectricCo\TopockProgram\GIS\MapFiles\2014\CMS\Design91\BOD_ES-4A.mxd

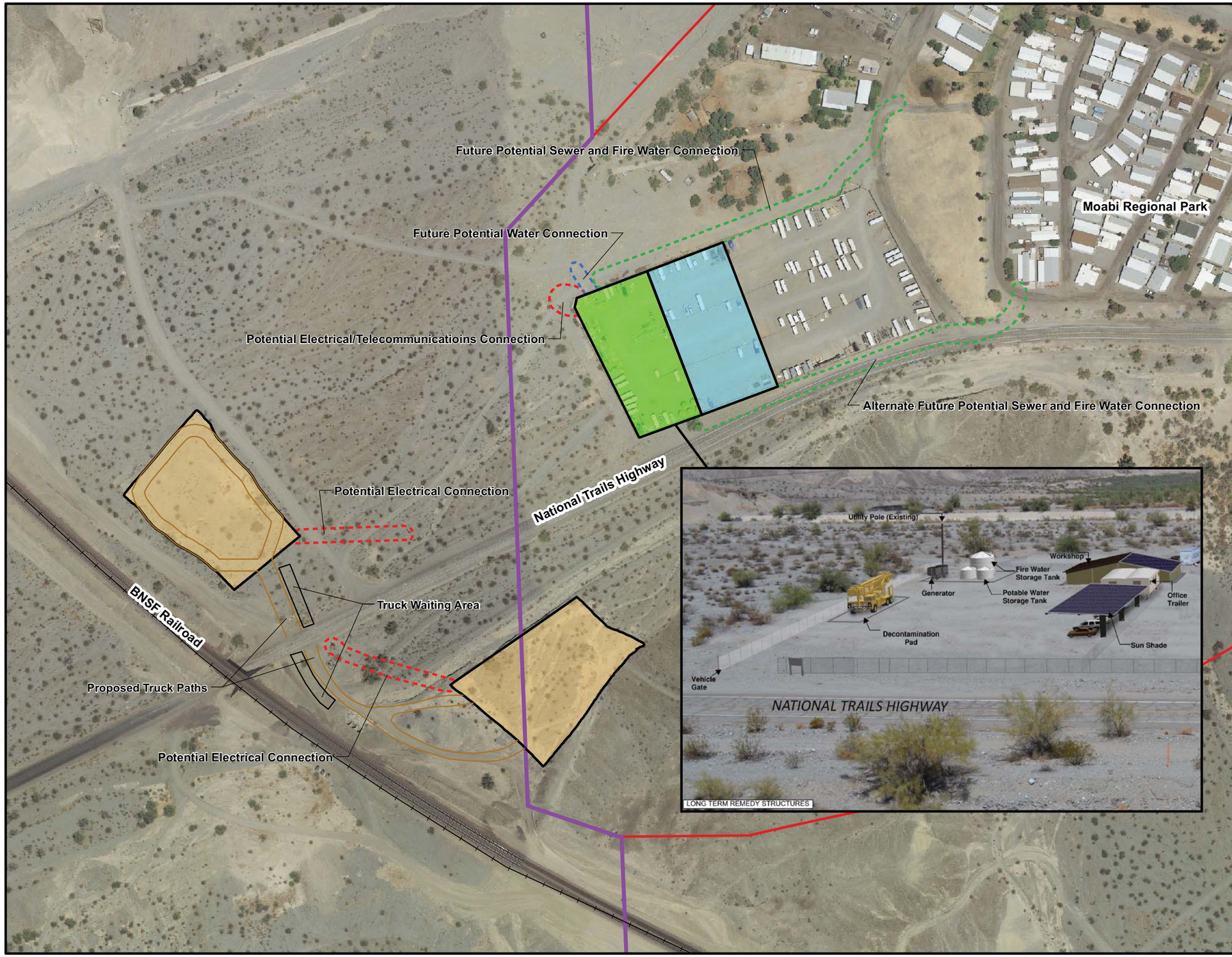

VICINITY MAP

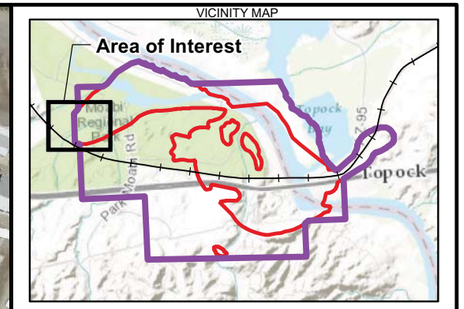

LEGEND

- Temporary Construction Laydown Area (1.3 acres approx.)
- Long Term Remedy Support Area (1.3 acres approx.)
- Soil Processing/Storage Area (Each 1.55 acres approx.)
- Area of Potential Effects (APE)
- EIR Project Area

Notes:
1. Descriptions of activities/functions anticipated for the construction support areas are included in the Construction/Remedial Action Work Plan.
2. Descriptions of activities/functions anticipated for the long-term remedy support areas are included in Section 3.5 of the BOD, and the O&M Manual.

N

0 95 190 380 Feet

Service Layer Credits: Sources: Esri, DeLorme, NAVTEQ, TomTom, Intermap, increment P Corp., GEBCO, USGS, FAO, NPS, NRCAN, GeoBase, IGN, Kadaster NL, Ordnance Survey, Esri Japan, METI, Esri China (Hong Kong), swisstopo, and the GIS User Community

FIGURE ES-4B
GENERAL REMEDY SYSTEM LAYOUT - MOABI REGIONAL PARK

SUPPLEMENTAL PRE-FINAL (90%) DESIGN
SUBMITTAL FOR THE FINAL GROUNDWATER REMEDY
PG&E TOPOCK COMPRESSOR STATION
NEEDLES, CALIFORNIA

CH2MHILL

Path: \\Zinfandel\proj\PacificGasElectricCo\TopockProgram\GIS\MapFiles\2014\CMS\Design91\BOD_ES-4B.mxd

LEGEND

- Underground Gas Supply Pipe
- Proposed Remedy Structure

Notes:

1. All remedy structure locations are approximate.

N

0 75 150 300 Feet

FIGURE ES-4C
GENERAL REMEDY SYSTEM LAYOUT - TCS EVAPORATION PONDS
SUPPLEMENTAL PRE-FINAL (90%) DESIGN SUBMITTAL FOR THE FINAL GROUNDWATER REMEDY
PG&E TOPOCK COMPRESSOR STATION, NEEDLES, CALIFORNIA

CH2MHILL

BAO \\ZINFANDEL\PROJ\PACIFICGASELECTRICCO\TOPOCKPROGRAM\GIS\MAPFILES\2014\CMS\DESIGN91\ES4C_POND_PHOTO.MXD ECLARK1 1/19/2015 2:14:23 PM

Site B

County Highway 10

HNWR-1A

HNWR-1

MW-X

Radio Communication Panel/Antenna

MW-Y

Radio Communication Panel/Antenna

Radio Communication Panel/Antenna

BNSF Railroad

40

Radio Communication Panel/Antenna

VICINITY MAP

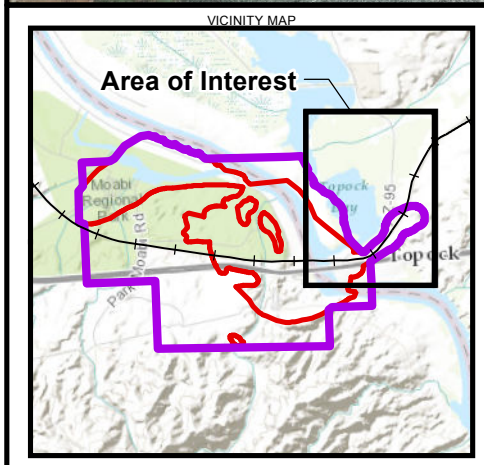

LEGEND

Existing Wells:

- Monitoring Well
- Water Supply Well

Planned Wells:

- Remedy Monitoring Well

Provisional Wells:

- Area for Potential Slant Well Screens

Pipeline Corridor for Remedy

- Aboveground Freshwater Pipe
- Underground Pipe/Conduit
- Future Provisional/Contingent Fresh Water Pipe

Note:
All wells and remedy structure locations are approximate.

- Proposed Remedy Structure
- Area of Potential Effects (APE)
- EIR Project Area

N

0 200 400 800 Feet

Service Layer Credits: Sources: Esri, DeLorme, NAVTEQ, TomTom, Intermap, increment P Corp., GEBCO, USGS, FAO, NPS, NRCAN, GeoBase, IGN, Kadaster NL, Ordnance Survey, Esri Japan, METI, Esri China (Hong Kong), swisstopo, and the GIS User Community

FIGURE ES-4D
GENERAL REMEDY SYSTEM LAYOUT - ARIZONA

SUPPLEMENTAL PRE-FINAL (90%) DESIGN SUBMITTAL
FOR THE FINAL GROUNDWATER REMEDY
PG&E TOPOCK COMPRESSOR STATION
NEEDLES, CALIFORNIA

CH2MHILL

Path: \\zinfandel\Proj\PacificGasElectricCo\TopockProgram\GIS\MapFiles\2014\CMS\Design91\BOD_ES-4D.mxd

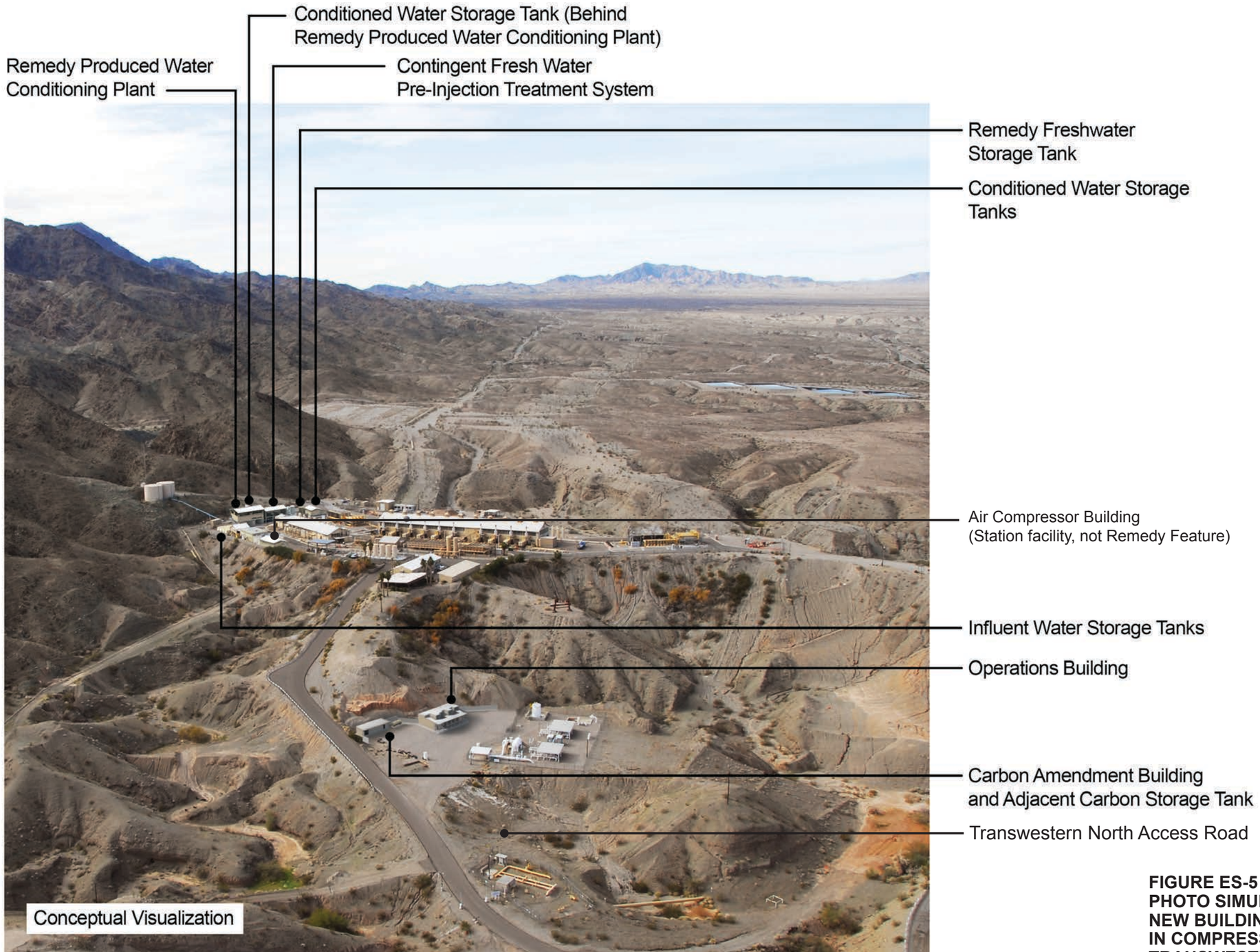

Source: IDC Architects 2014.

FIGURE ES-5
PHOTO SIMULATION OF NEW BUILDINGS/STRUCTURES IN COMPRESSOR STATION AND TRANSWESTERN BENCH

SUPPLEMENTAL PRE-FINAL (90%) DESIGN SUBMITTAL FOR THE FINAL GROUNDWATER REMEDY
PG&E TOPOCK COMPRESSOR STATION, NEEDLES, CALIFORNIA

CH2MHILL

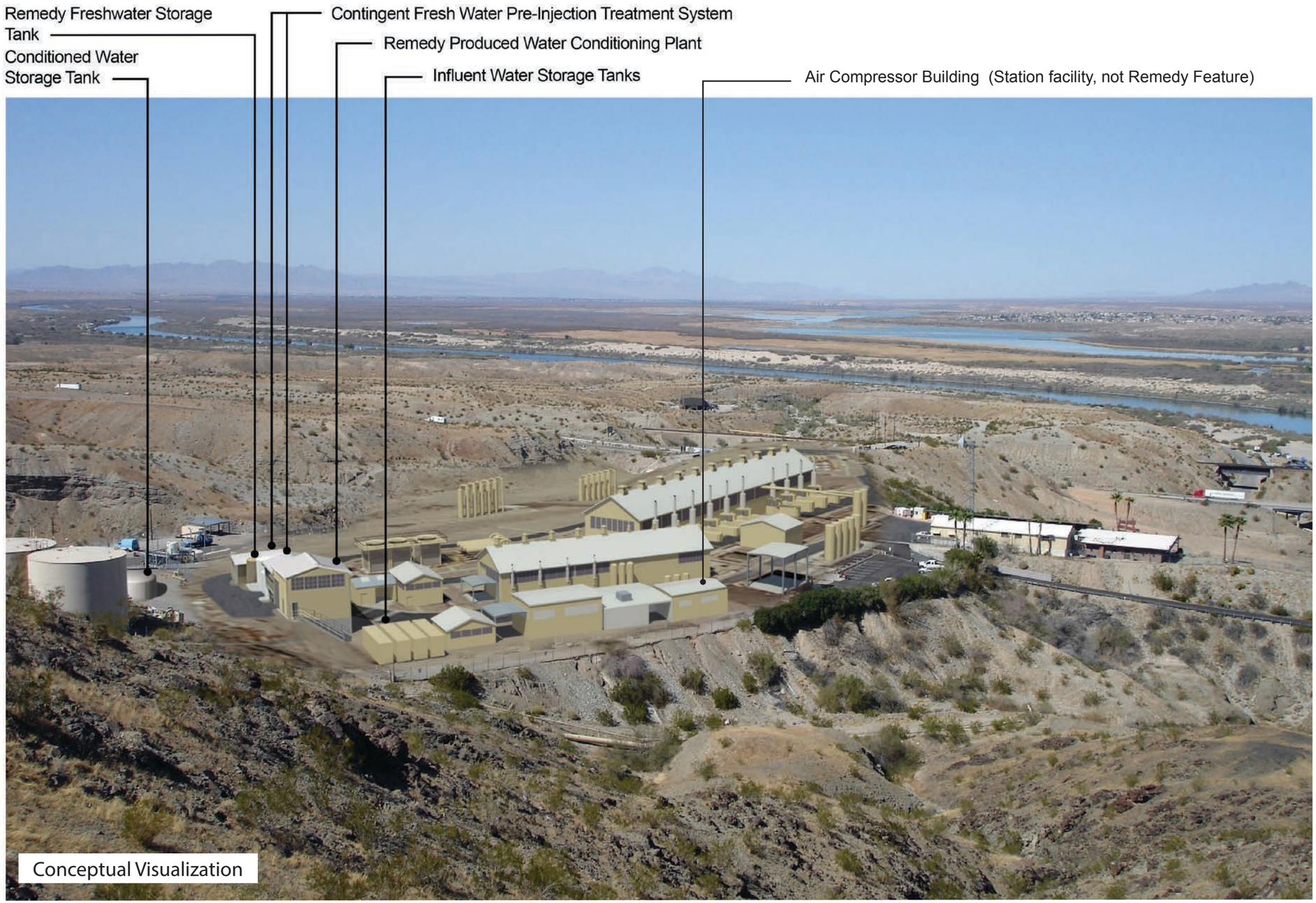

Source: IDC Architects 2014.

FIGURE ES-6
NEW BUILDING AND INFRASTRUCTURE IN THE COMPRESSOR STATION
SUPPLEMENTAL PRE-FINAL (90%) DESIGN SUBMITTAL FOR THE FINAL GROUNDWATER REMEDY
PG&E TOPOCK COMPRESSOR STATION, NEEDLES, CALIFORNIA

CH2MHILL®

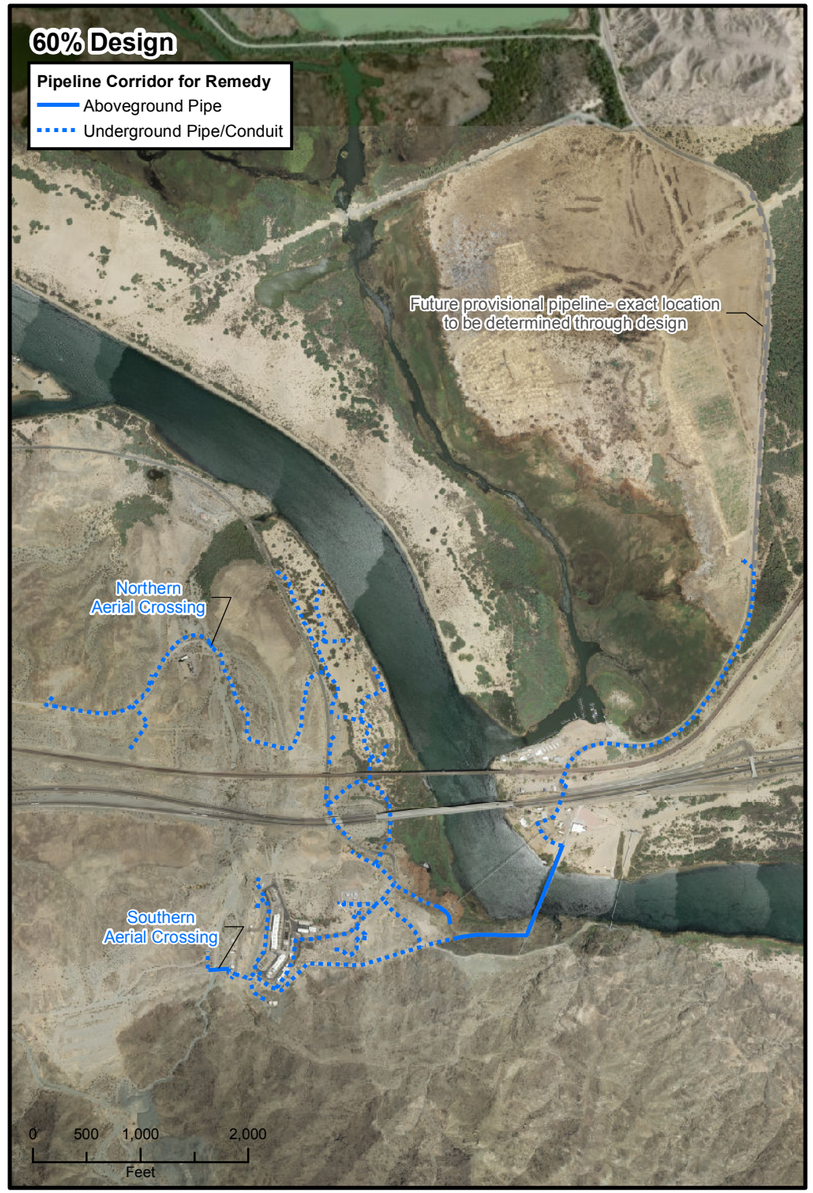

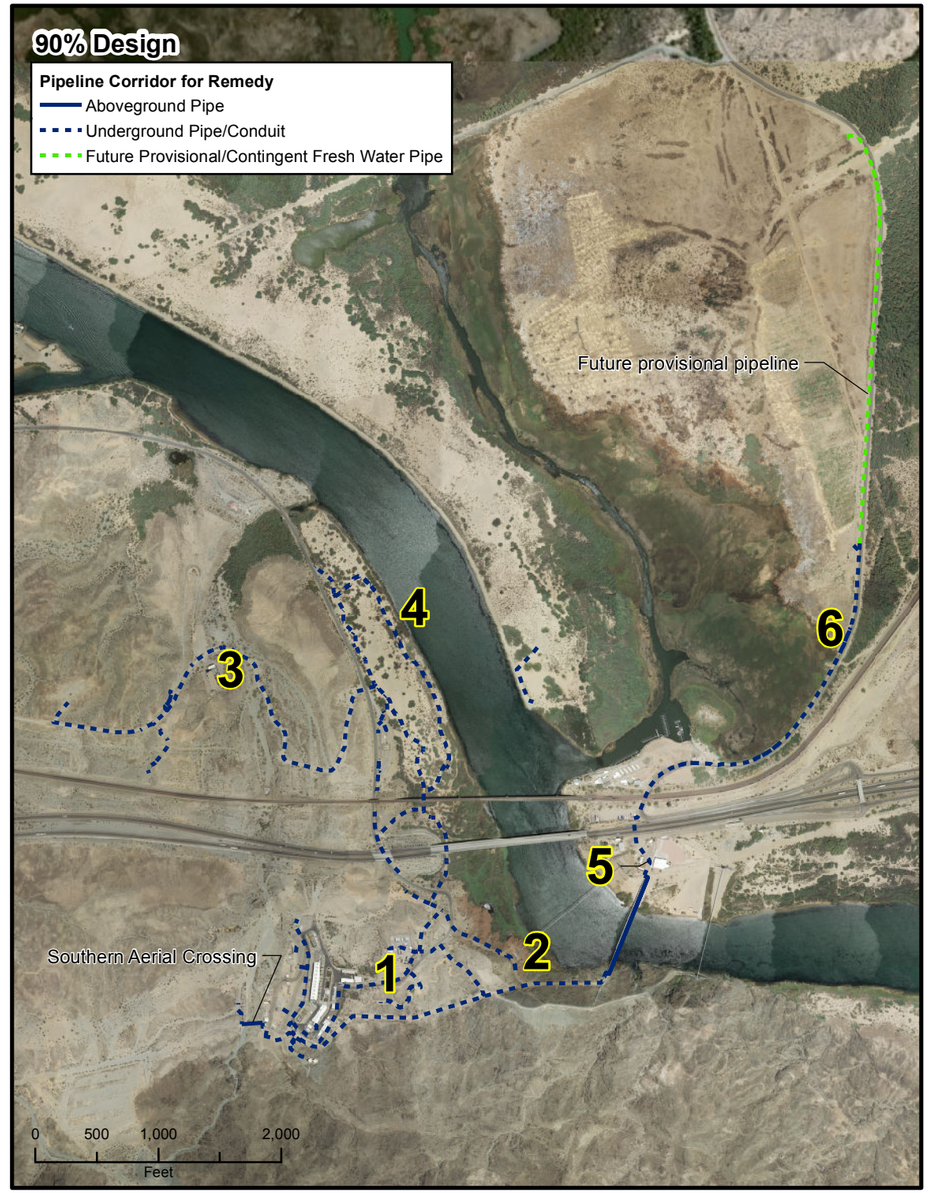

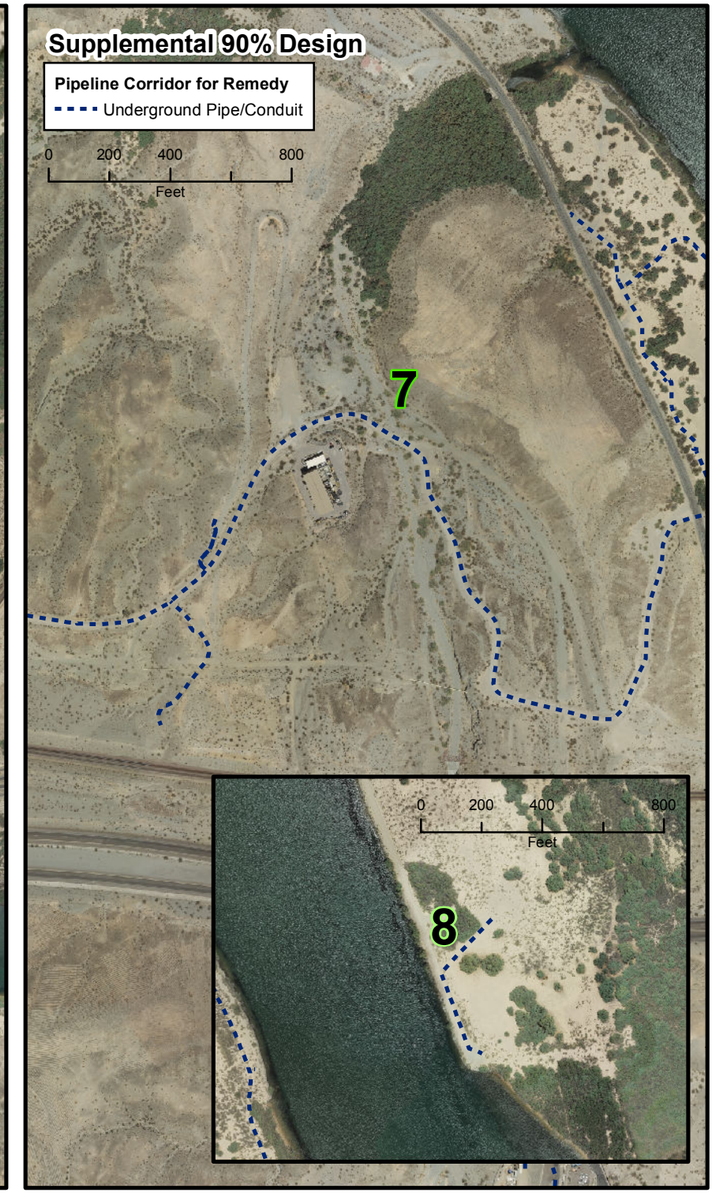

KEY CHANGES

1. Rerouted piping at entrance to TCS to avoid utility conflicts.
2. Brought the aboveground portion of pipe that conveys extracted groundwater from the East Ravine underground after review of subsurface data obtained from potholing efforts.
3. Evaluated alternative crossing of Bat Cave Wash in the uplands; see Note 7 for Bat Cave Wash crossing design.
4. Rerouted piping/added access road in floodplain to facilitate O&M of planned and future provisional river bank extraction wells.
5. Rerouted piping to get on Arch Bridge (in AZ) to avoid private driveway with leaning wall.
6. Moved freshwater pipe from east to west side of County Highway 10 to avoid overhead electrical line for construction safety.
7. Eliminated pipe bridge design. Crossing of Bat Cave Wash involves continuing the piping/conduit alignment along the access road, raising the roadbed to allow for the pipes/conduits to pass through, and replacing the existing corrugated metal pipes with higher capacity reinforced concrete box culverts.
8. Added pipe/conduit from MW-Y well vaults to a sampling vault located along the access road. Also showed conduit from MW-54 cluster to data collection panel (this feature was included in the 90% design, see drawing E-16-22).

Note:
All pipeline locations are approximate.

N

FIGURE ES-9
ILLUSTRATION OF KEY CHANGES FROM 60% TO 90% DESIGN – PIPELINE ALIGNMENT

SUPPLEMENTAL PRE-FINAL (90%) DESIGN SUBMITTAL
FOR THE FINAL GROUNDWATER REMEDY,
PG&E TOPOCK COMPRESSOR STATION,
NEEDLES, CALIFORNIA

CH2MHILL

Path: \\Zinfandel\proj\PacificGasElectricCo\TopockProgram\GIS\MapFiles\2014\CMS\Design91\ES9_6090S90.mxd

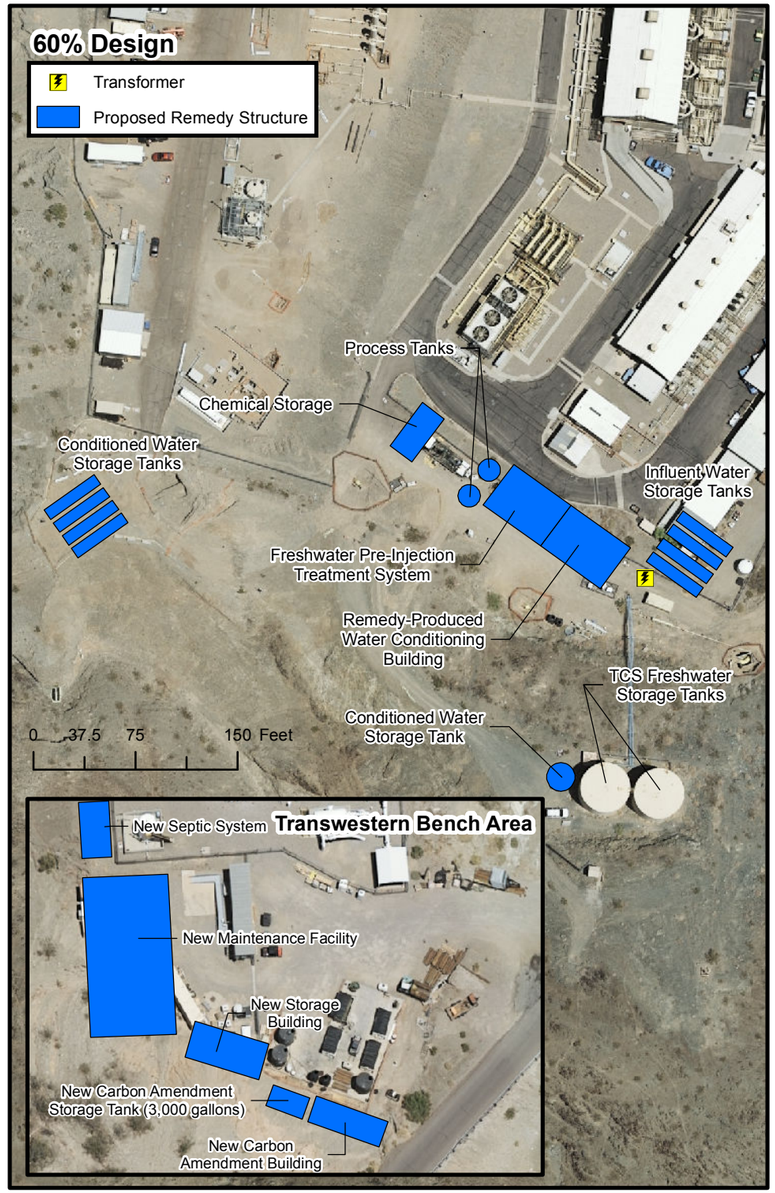

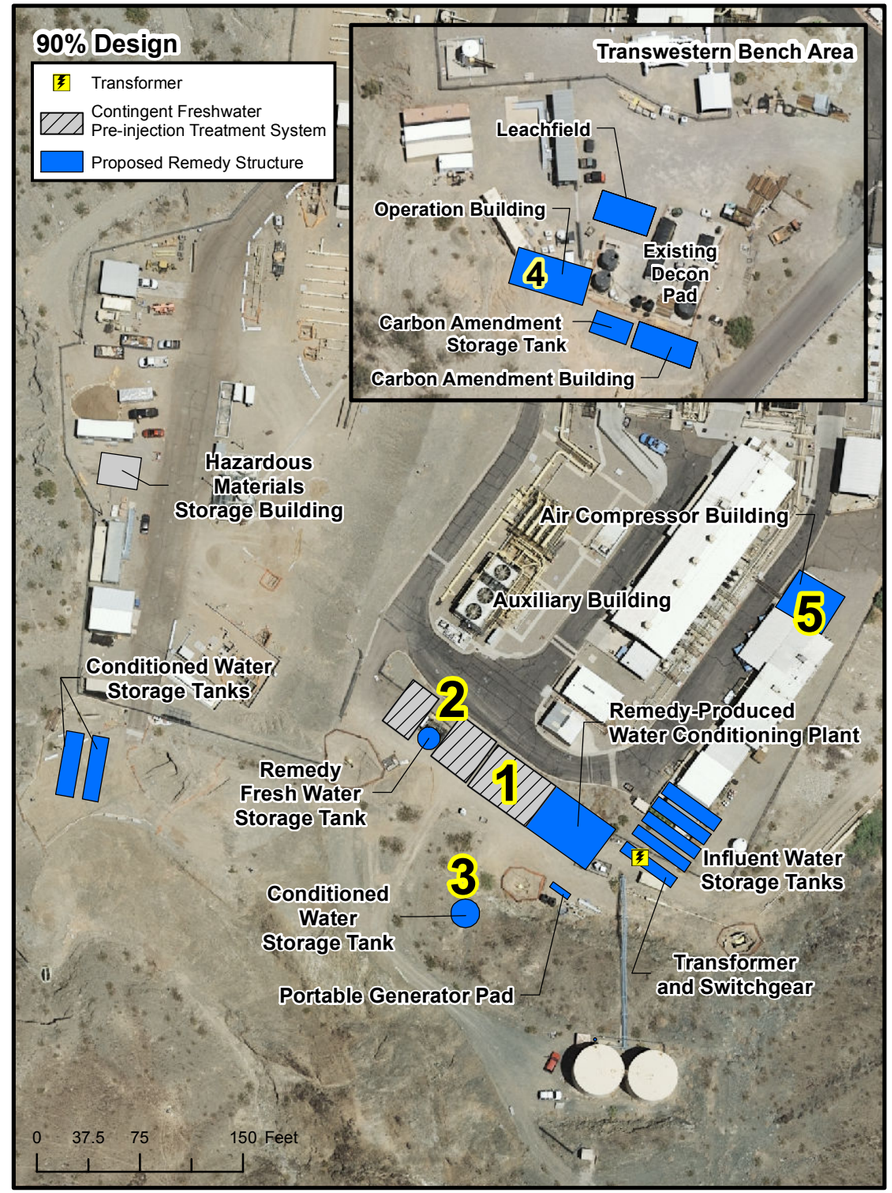

Key Changes:

1. Made the Fresh Water Pre-Injection Treatment System (As treatment) into a contingent system. An equipment decontamination pad will be built in the footprint of the Contingent building.
2. Separated freshwater storage for remedy from Compressor Station. Added a smaller 10,000-gallon tank.
3. Moved the conditioned water storage tank to a lower elevation.
4. To free up space at TW Bench, retained critical operation functions in Operations Building at TW Bench. Moved rest of functions to Moabi Regional Park.
5. The primary power supply source for the remedy facilities in California will be power generated by two new natural gas engine-driven generators installed inside the existing Auxiliary Building. The Compressor Station has decided to consolidate their existing air compressors with their existing air dryer in a new Air Compressor Building, located just to the east of their current location. The new air compressor location is preferred by the Compressor Station staff for ease of operation of both the power and the compressed air systems. The Compressor Station's decision to move their equipment created space in the Auxiliary Building for the remedy power supply.
6. Corrected to show the Air Compressor Building as a Compressor Station building, and not part of remedy.
7. Added the radio communication panel/antenna near the existing TCS water tanks (note that this feature was in the 90% design [see Drawing E-10-03], but was not explicitly called out in figure previously).

Note:
All remedy structure locations are approximate.

N

FIGURE ES-10
ILLUSTRATION OF KEY CHANGES FROM THE 60% TO 90% DESIGN - REMEDY FACILITIES AT THE COMPRESSOR STATION AND TRANSWESTERN BENCH

SUPPLEMENTAL PRE-FINAL (90%) DESIGN SUBMITTAL
FOR THE FINAL GROUNDWATER REMEDY,
PG&E TOPOCK COMPRESSOR STATION,
NEEDLES, CALIFORNIA

CH2MHILL

Path: \\Zinfandel\proj\PacificGasElectricCo\TopockProgram\GIS\MapFiles\2014\CMS\Design91\ES10_6090S90.mxd

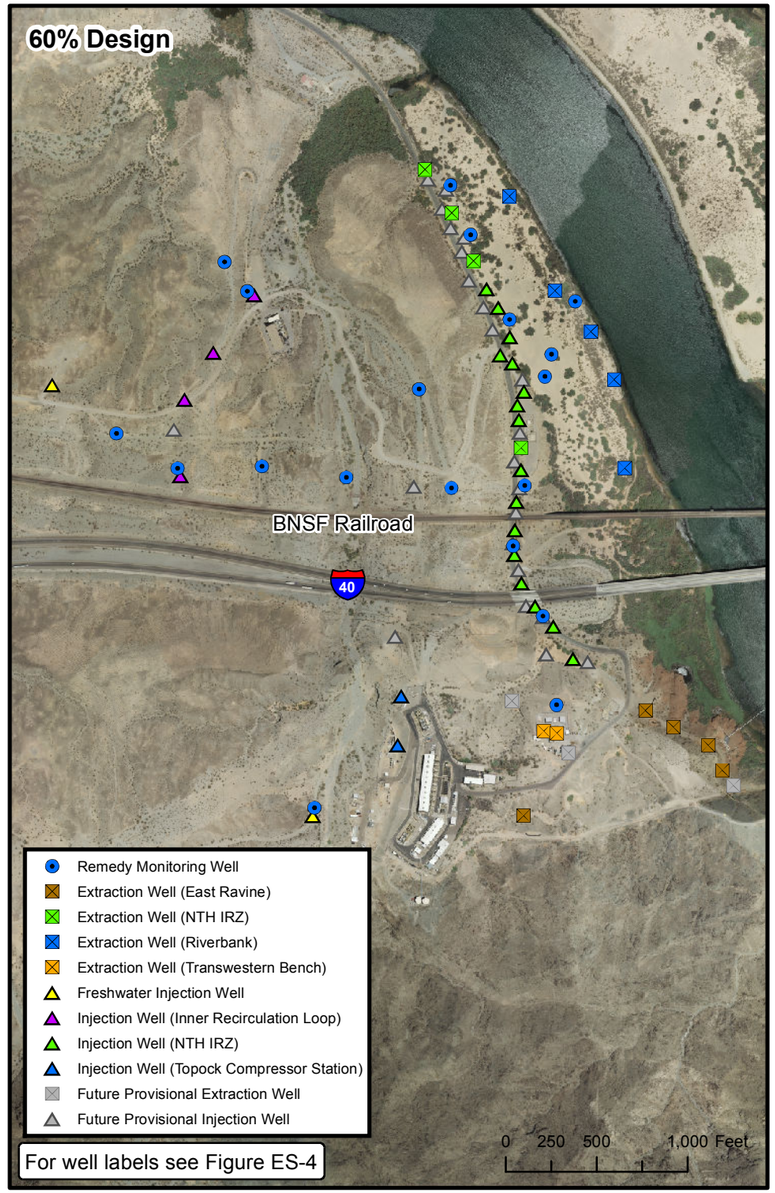

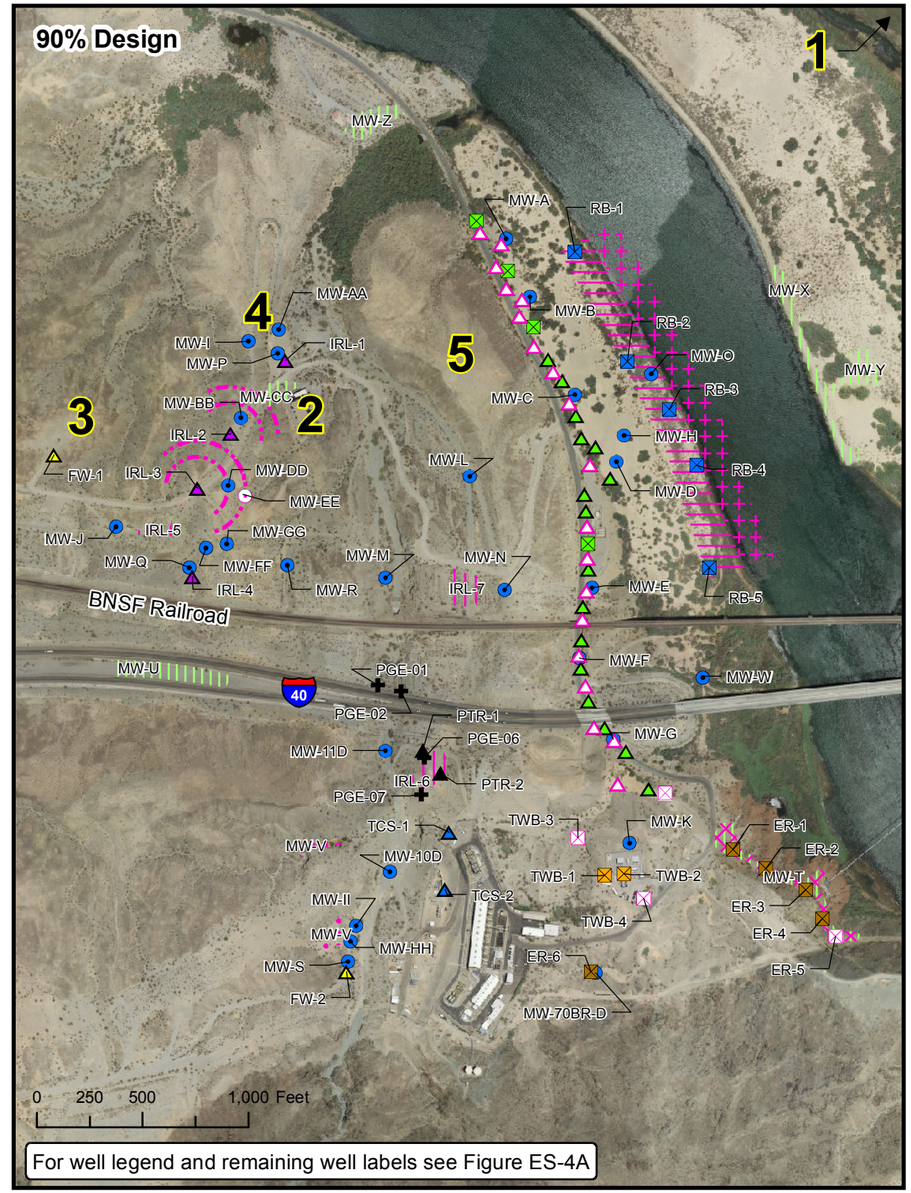

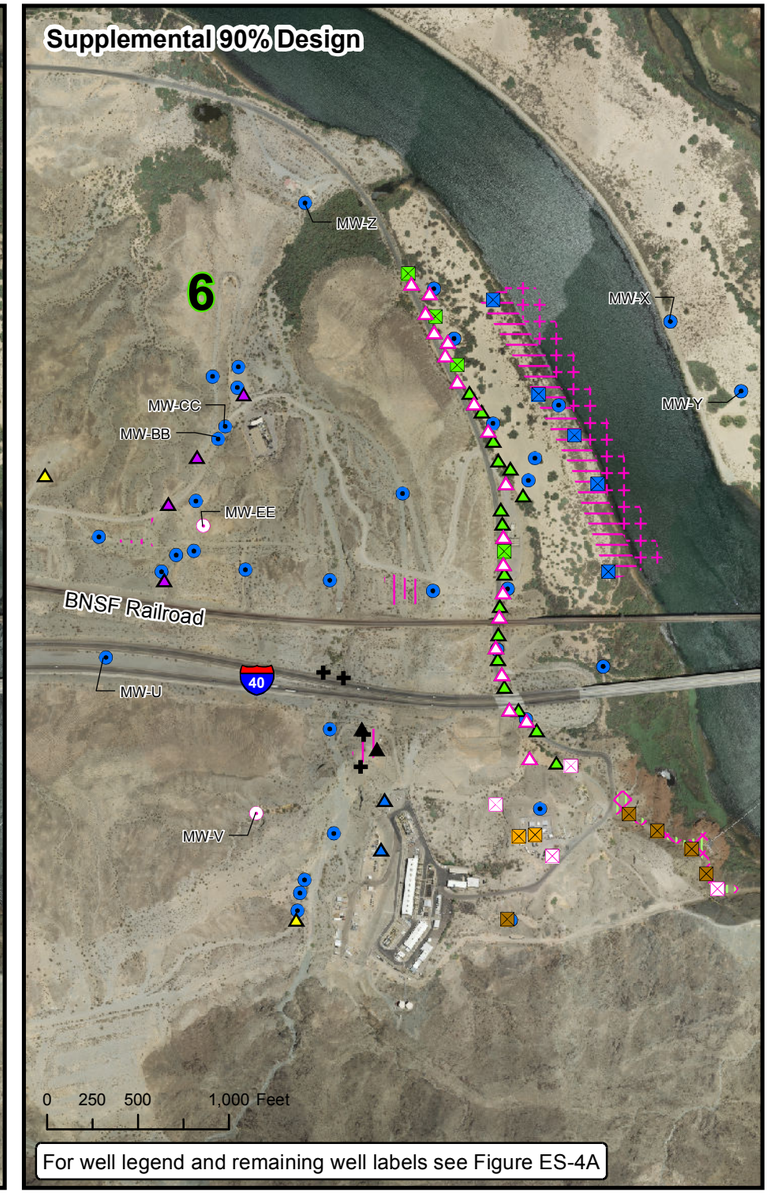

KEY CHANGES:

1. Installed two water supply wells in Arizona – HNWR-1A (primary source) and Site B (contingent source), not shown on this figure.
2. Added Arsenic monitoring wells in the uplands.
3. Moved FW-1 to the north to avoid installation of new Arsenic monitoring wells on FMIT property.
4. Moved remedy well IRL-1 to avoid the installation of an arsenic monitoring well on FMIT parcel. In addition, in response to a comment from the FMIT (60% RTC #676 FMIT-178), moved MW-I approximately 45 to 50 feet south-southeast to a location acceptable to stakeholders and Tribes during a site walk on July 30, 2013.
5. Added planned and future provisional wells per April 4, 2014 agencies direction letter and response to 60% comments.
6. Revised specific locations for wells MW-U, MW-V, MW-X, MW-Y, MW-Z, MW-BB, MW-CC, and MW-EE, in accordance with October 21, 2014 and December 23, 2014 agencies direction letters as well as additional information obtained since the submittal of the 90% design.

Note:
All remedy structure locations are approximate.

N

FIGURE ES-11
ILLUSTRATION OF KEY CHANGES FROM 60% TO 90% DESIGN - WELL NETWORK

SUPPLEMENTAL PRE-FINAL (90%) DESIGN SUBMITTAL
FOR THE FINAL GROUNDWATER REMEDY
PG&E TOPOCK COMPRESSOR STATION,
NEEDLES, CALIFORNIA

CH2MHILL

Path: \\Zinfandel\proj\PacificGasElectricCo\TopockProgram\GIS\MapFiles\2014\CMS\Design91\ES11_6090S90.mxd

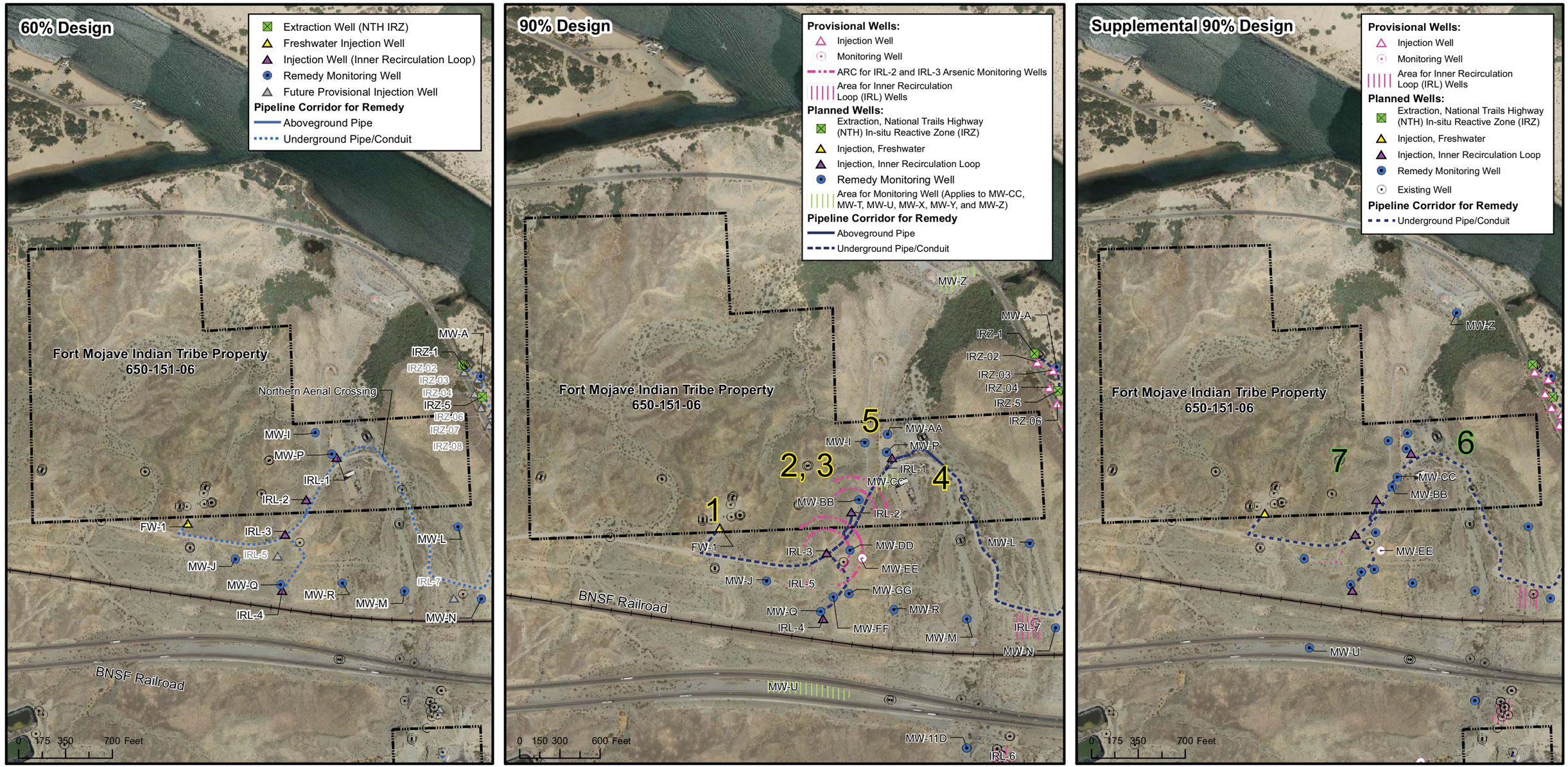

KEY CHANGES

1. Moved freshwater injection well FW-1 to the north to allow for reuse of existing wells for arsenic monitoring at this location. This change avoids the installation of two new monitoring wells on FMIT parcel.
2. Added new Arsenic monitoring wells MW-AA and MW-BB.
3. Added future provisional arsenic monitoring wells, MW-CC and MW-EE. The necessity for these wells will be determined pending operational data from other arsenic monitoring wells. CW-2S location is a potential alternate location for MW-EE.
4. Evaluated alternative crossing of Bat Cave Wash; see Note 7 on Figure ES-9.
5. Moved remedy well IRL-1 to avoid the installation of an arsenic monitoring well on FMIT parcel. In addition, in response to a comment from the FMIT (60% RTC #676 FMIT-178), moved MW-I approximately 45 to 50 feet south-southeast to a location acceptable to stakeholders and Tribes during a site walk on July 30, 2013.
6. Eliminated pipe bridge design. Crossing of Bat Cave Wash involves continuing the piping/conduit alignment along the access road, raising the roadbed to allow for the pipes/conduits to pass through, and replacing the existing corrugated metal pipes with higher capacity reinforced concrete box culverts.
7. Revised specific locations for wells MW-U, MW-Z, MW-BB, MW-CC, and MW-EE in accordance with October 21, 2014 and December 23, 2014 agencies direction letters as well as additional information obtained since the submittal of the 90% design.

Note:
All wells and remedy structure locations are approximate.

N

FIGURE ES-12
ILLUSTRATION OF KEY CHANGES FROM 60% TO 90% DESIGN – REMEDY FEATURES ON AND NEAR FMIT PROPERTY

SUPPLEMENTAL PRE-FINAL (90%) DESIGN SUBMITTAL
FOR THE FINAL GROUNDWATER REMEDY
PG&E TOPOCK COMPRESSOR STATION,
NEEDLES, CALIFORNIA

CH2MHILL

Path: \\Zinfandel\proj\PacificGasElectricCo\TopockProgram\GIS\MapFiles\2014\CMS\Design91\ES12_6090S90.mxd

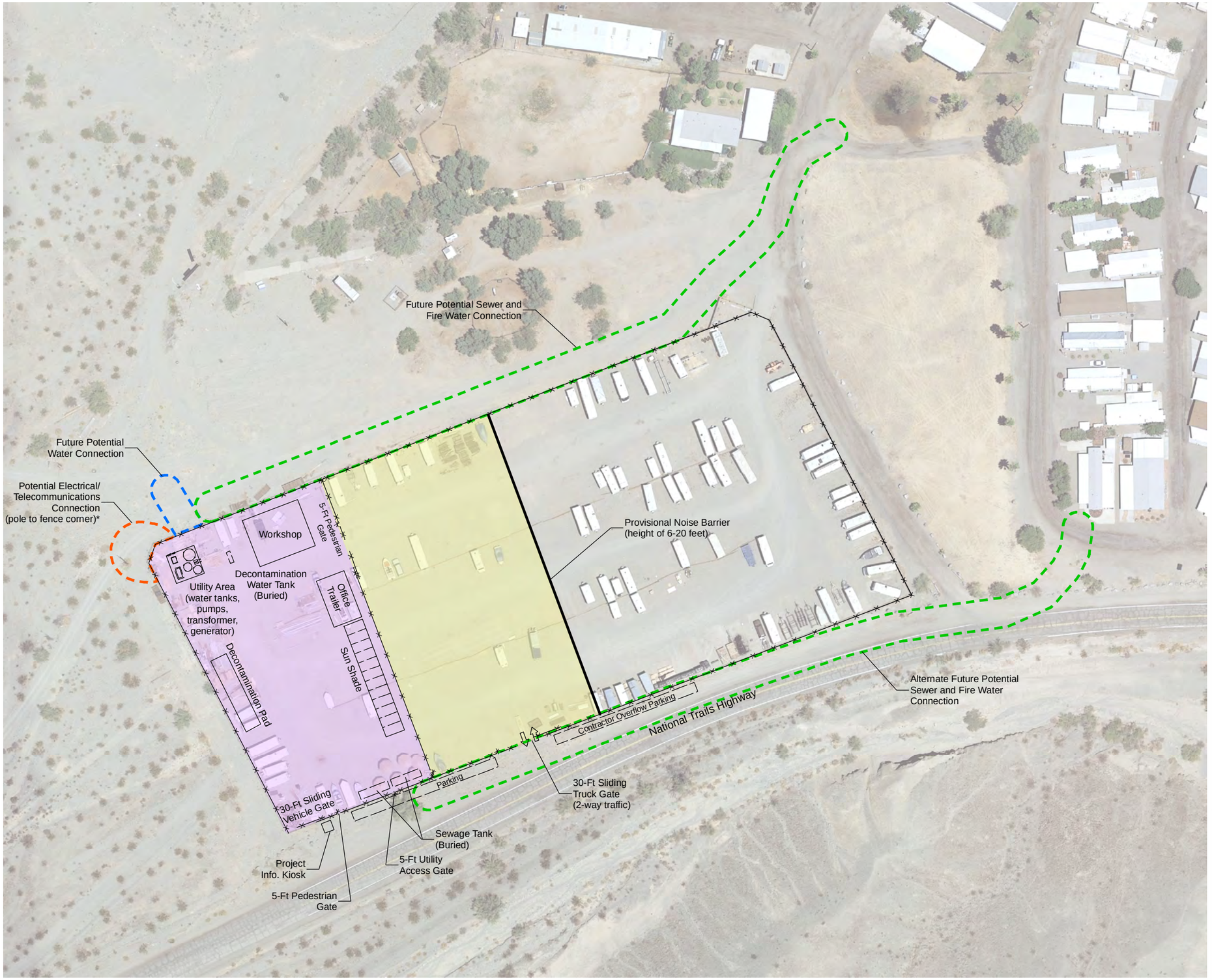

Legend

- Fenceline (Buildings offset 10 feet from fenceline)
- Temporary Construction Laydown Area (1.3 acres approx.)
- Long Term Remedy Support Area (1.3 acres approx.)

Notes:

1. All remedy structure locations are approximate.
2. Descriptions of activities/functions anticipated for the construction support areas are included in the Construction/Remedial Action Work Plan.
3. Descriptions of activities/functions anticipated for the long-term remedy support areas are included in Section 3.5 of the BOD and the O&M Manual.
4. Temporary storage/conex boxes (not shown) may be used within the fenced Construction Headquarters.

* Final locations will be determined by Needles

N

0 100 200 300

1 " = 100 '

PACIFIC GAS AND ELECTRIC COMPANY
TOPOCK COMPRESSOR STATION, NEEDLES, CALIFORNIA
SUPPLEMENTAL PRE-FINAL (90%) DESIGN SUBMITTAL FOR THE FINAL GROUNDWATER REMEDY

DETAILED LAYOUT OF THE CONSTRUCTION HEADQUARTERS AND LONG-TERM REMEDY SUPPORT AREA – MOABI REGIONAL PARK

ARCADIS

FIGURE
ES-14

File Path: C:\Projects\ETI\PGE-Topock\MXD\CHQ\ES-14_CHQ_Park_Moabi_20150116.mxd - 1/19/2015

LEGEND

- Underground Gas Supply Pipe
- Proposed Remedy Structure

Notes:

1. All remedy structure locations are approximate.

N

0 75 150 300 Feet

FIGURE 3.4-1
LAYOUT OF EVAPORATION ENHANCEMENT EQUIPMENT AT THE TCS EVAPORATION PONDS
SUPPLEMENTAL PRE-FINAL (90%) DESIGN SUBMITTAL FOR THE FINAL GROUNDWATER REMEDY
PG&E TOPOCK COMPRESSOR STATION, NEEDLES, CALIFORNIA

CH2MHILL

BAO \\ZINFANDEL\PROJ\PACIFICGASELECTRICCO\TOPOCKPROGRAM\GIS\MAPFILES\2014\CMS\DESIGN91\FIG341_POND_PHOTO.MXD ECLARK1 12/31/2014 8:04:34 AM

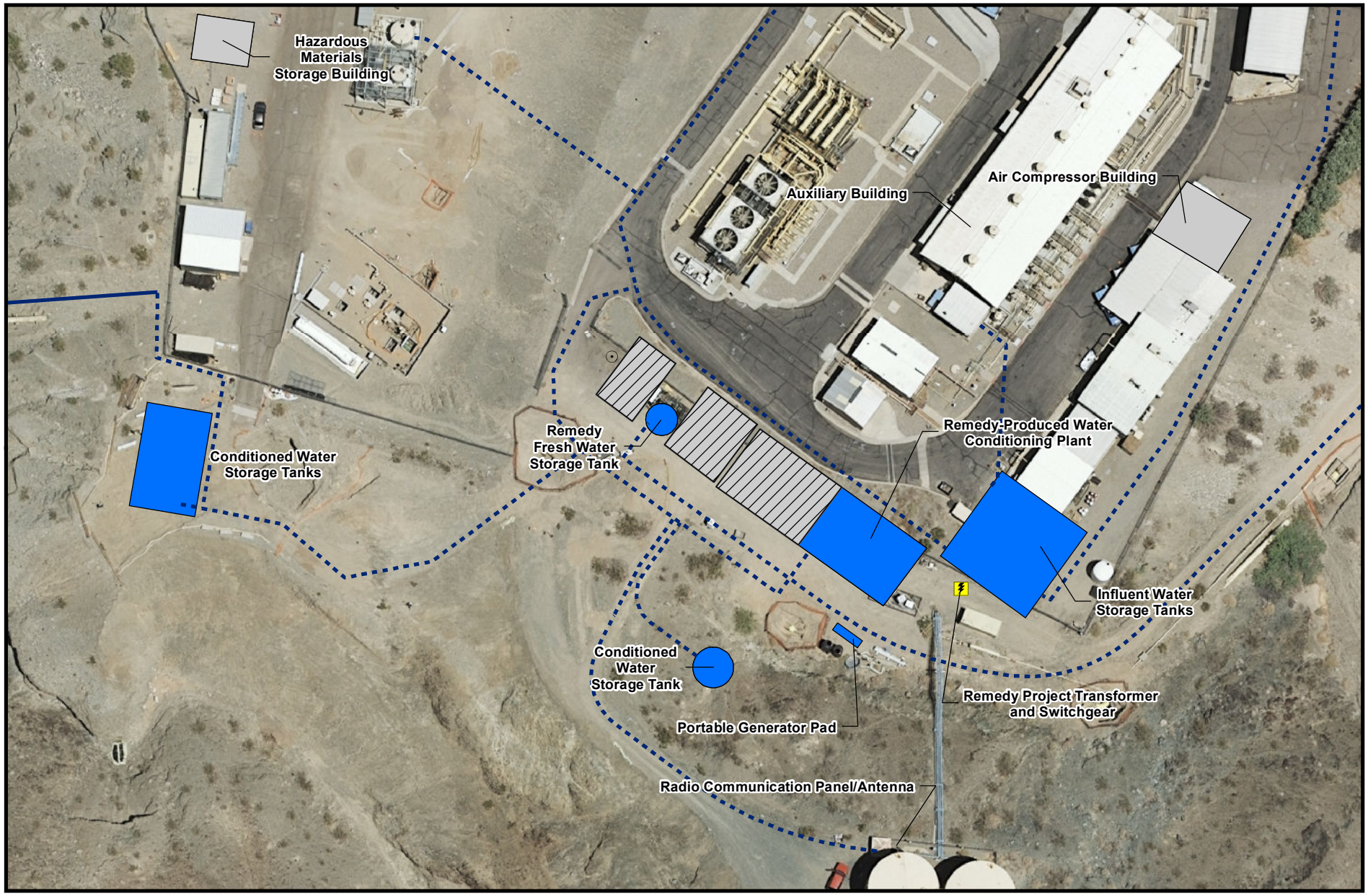

LEGEND

- Electrical Transformer
- Aboveground Pipe
- Underground Pipe/Conduit
- Proposed Remedy Structure
- Contingent Freshwater Pre-injection Treatment System
- New Compressor Station Buildings (not part of remedy)

Notes:

1. All remedy structure locations are approximate.
2. An equipment decontamination pad will be installed in the footprint of the Contingent Freshwater Pre-injection Treatment Building (first grey area right immediately adjacent to the Remedy-Produced Water Conditioning Plant).

FIGURE 3.5-1
LAYOUT OF NEW BUILDINGS AND STRUCTURES INSIDE THE COMPRESSOR STATION
SUPPLEMENTAL PRE-FINAL (90%) DESIGN SUBMITTAL
FOR THE FINAL GROUNDWATER REMEDY,
PG&E TOPOCK COMPRESSOR STATION,
NEEDLES, CALIFORNIA

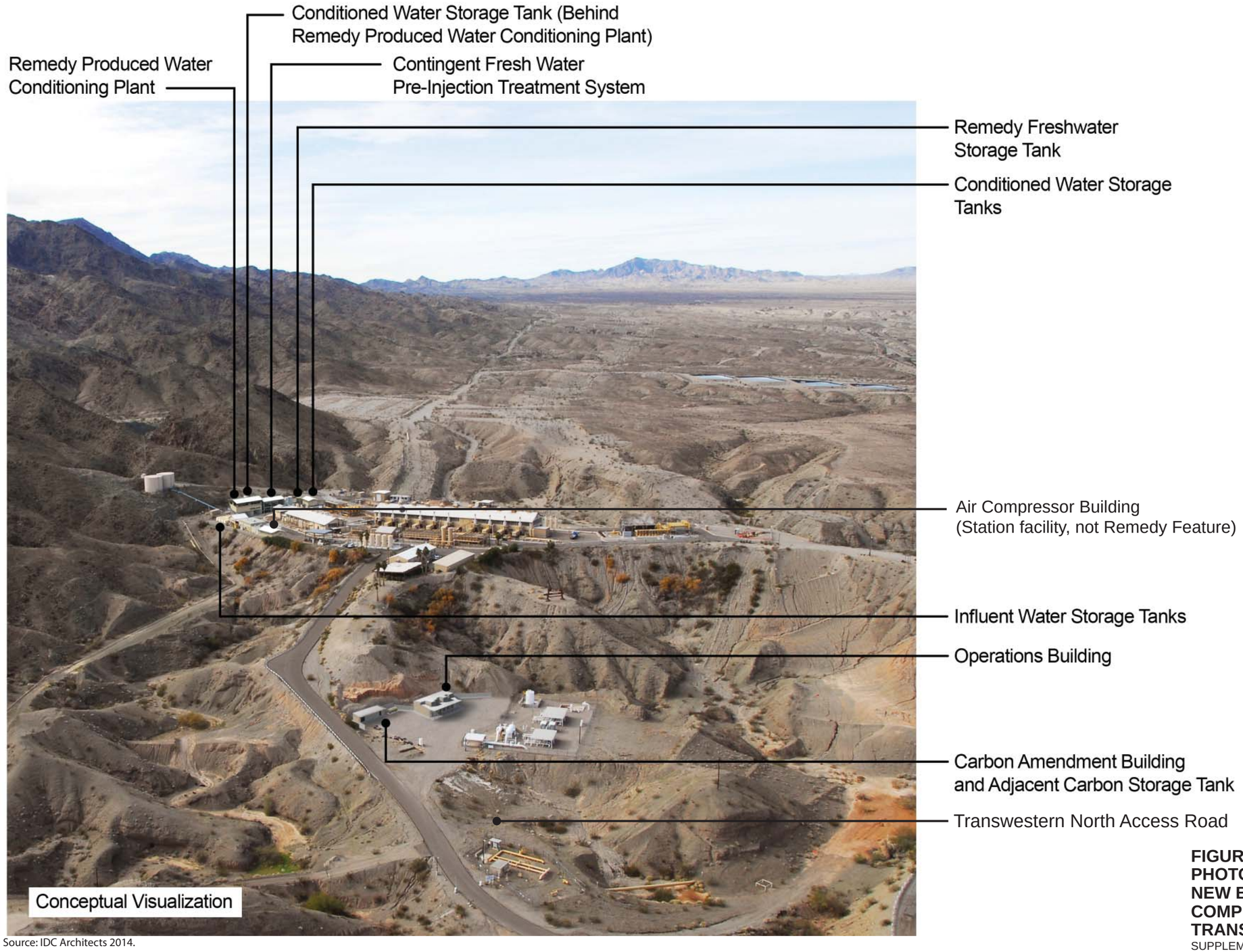

Source: IDC Architects 2014.

FIGURE 3.5-2
PHOTO SIMULATION OF NEW BUILDINGS/STRUCTURES IN COMPRESSOR STATION AND TRANSWESTERN BENCH

SUPPLEMENTAL PRE-FINAL (90%) DESIGN SUBMITTAL FOR THE FINAL GROUNDWATER REMEDY
PG&E TOPOCK COMPRESSOR STATION, NEEDLES, CALIFORNIA

CH2MHILL

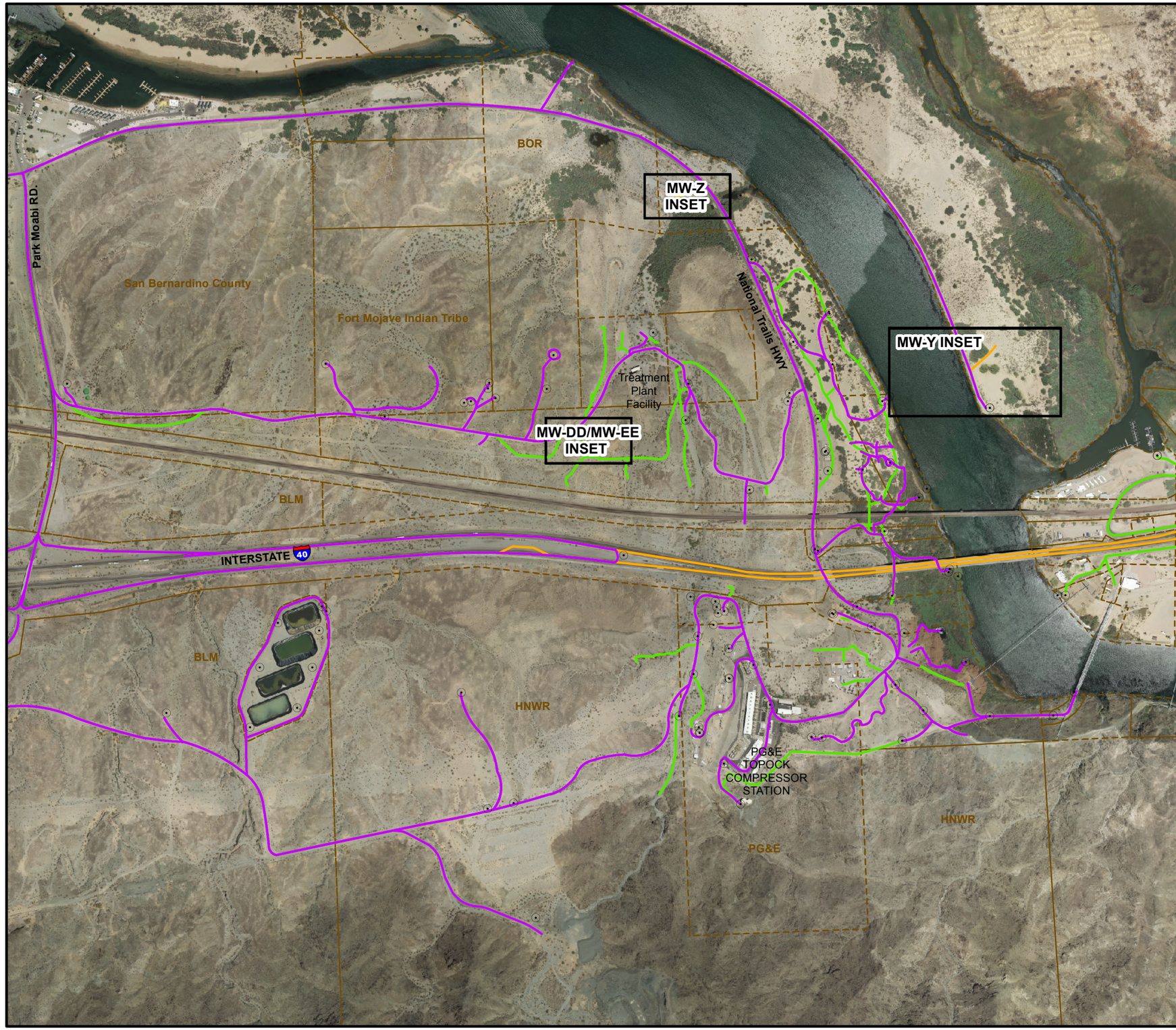

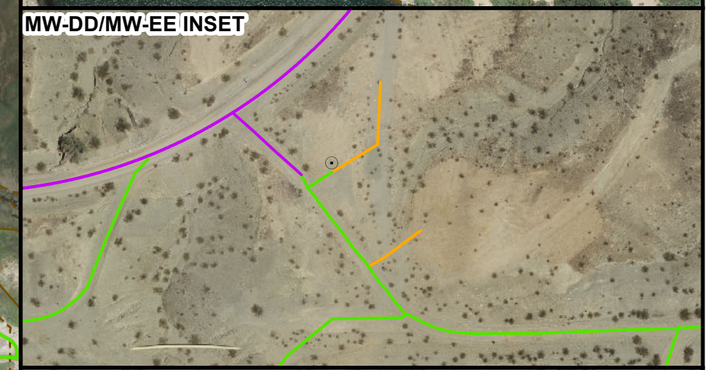

LEGEND

- Existing Well
- Existing Access Route
- New Remedy Access Route
- New Remedy Route (Revised for Supplemental Design)

Note:
1. The groundwater remedy will utilize all existing and new access routes.
2. Additional routes may be required for future provisional wells.
3. Locations for access routes are approximate.

FIGURE 3.5-9A
PROPOSED ACCESS ROUTES FOR REMEDY FEATURES - CALIFORNIA
SUPPLEMENTAL PRE-FINAL (90%) DESIGN SUBMITTAL
FOR THE FINAL GROUNDWATER REMEDY
PG&E TOPOCK COMPRESSOR STATION,
NEEDLES, CALIFORNIA

CH2MHILL

Path: \\zinfandel\Proj\PacificGasElectricCo\TopockProgram\GIS\MapFiles\2014\CMS\Design91\BOD_359.mxd Date Saved: 1/21/2015 8:56:33 AM

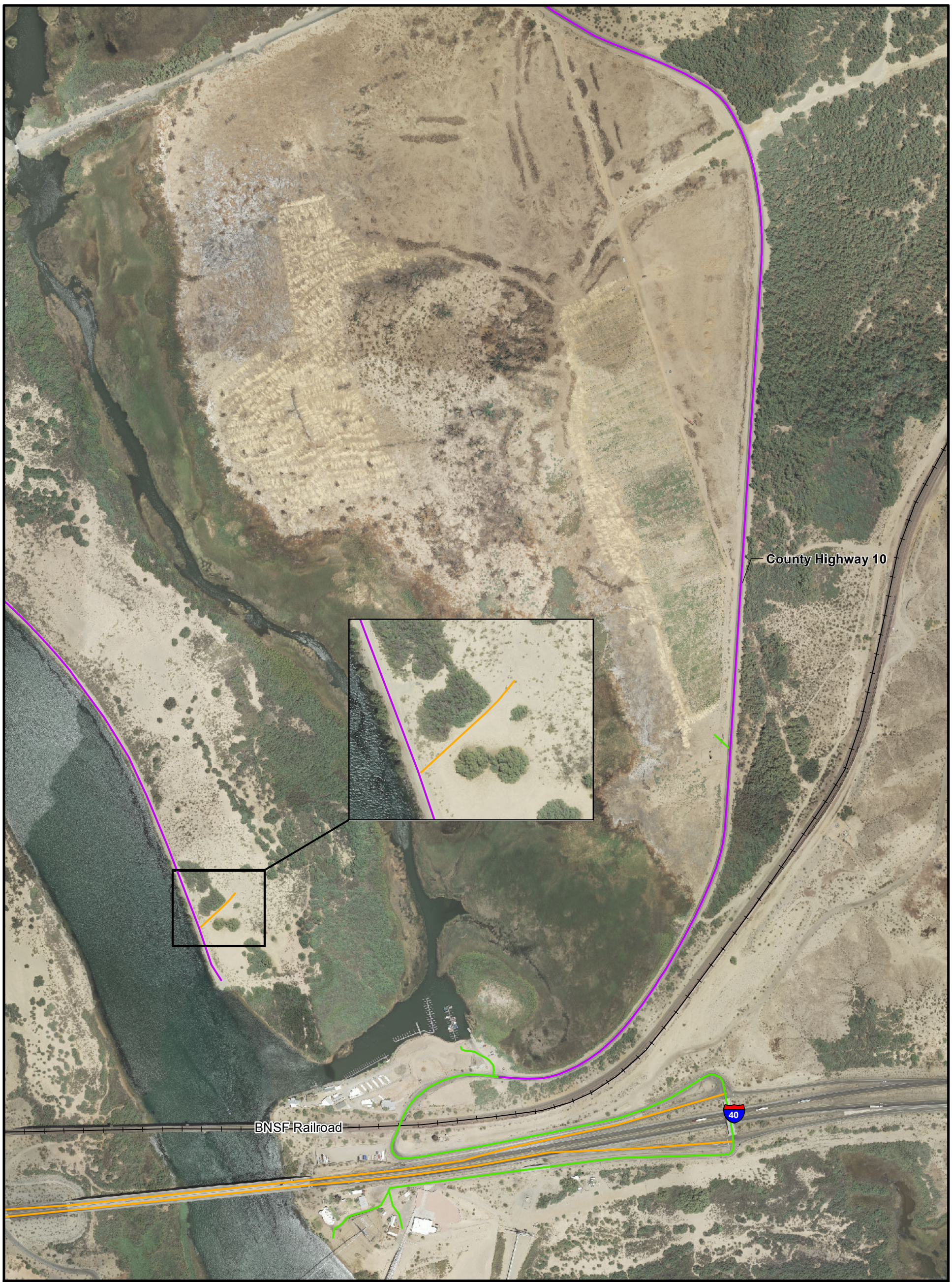

VICINITY MAP

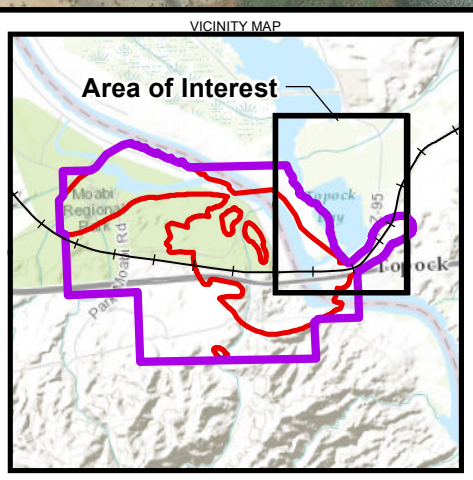

LEGEND

- Existing Access Route
- New Remedy Access Route
- New Remedy Route (Revised for Supplemental Design)

Note:
1. The groundwater remedy will utilize all existing and new access routes.
2. Locations for access routes are approximate.

Service Layer Credits: Sources: Esri, DeLorme, NAVTEQ, TomTom, Intermap, increment P Corp., GEBCO, USGS, FAO, NPS, NRCAN, GeoBase, IGN, Kadaster NL, Ordnance Survey, Esri Japan, METI, Esri China (Hong Kong), swisstopo, and the GIS User Community

N

0 200 400 800 Feet

FIGURE 3.5-9B
PROPOSED ACCESS ROUTES FOR REMEDY FEATURES - ARIZONA
SUPPLEMENTAL PRE-FINAL (90%) DESIGN SUBMITTAL
FOR THE FINAL GROUNDWATER REMEDY
PG&E TOPOCK COMPRESSOR STATION
NEEDLES, CALIFORNIA

CH2MHILL

Path: \\Zinfandel\proj\PacificGasElectricCo\TopockProgram\GIS\MapFiles\2014\CMS\Design91\FIG359B_91pct_AccessRoutes_AZ.mxd

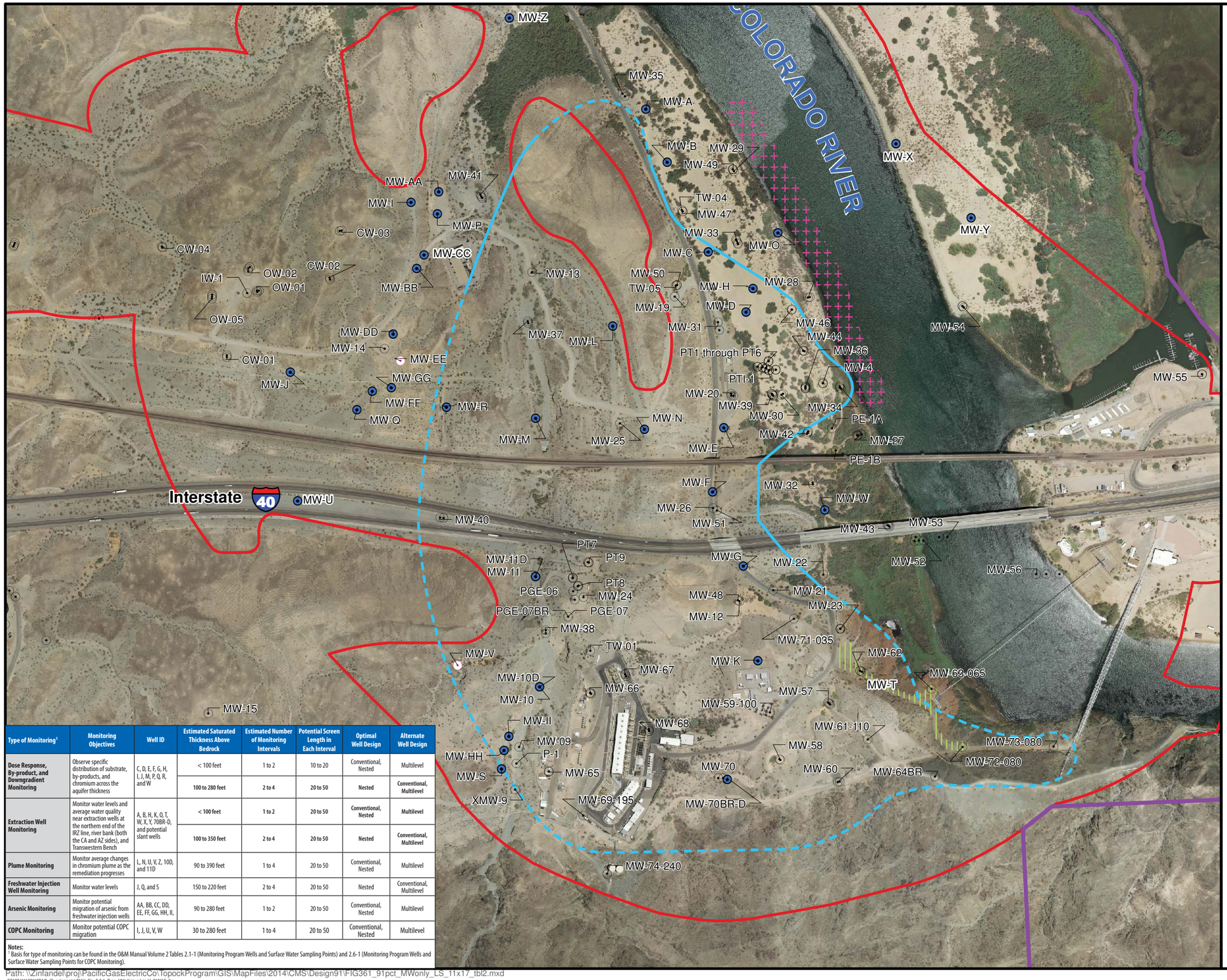

Type of Monitoring[1]	Monitoring Objectives	Well ID	Estimated Saturated Thickness Above Bedrock	Estimated Number of Monitoring Intervals	Potential Screen Length in Each Interval	Optimal Well Design	Alternate Well Design
Dose Response, By-product, and Downgradient Monitoring	Observe specific distribution of substrate, by-products, and chromium across the aquifer thickness	C, D, E, F, G, H, I, J, M, P, Q, R, and W	< 100 feet	1 to 2	10 to 20	Conventional, Nested	Multilevel
			100 to 280 feet	2 to 4	20 to 50	Nested	Conventional, Multilevel
Extraction Well Monitoring	Monitor water levels and average water quality near extraction wells at the northern end of the IRZ line, river bank (both the CA and AZ sides), and Transwestern Bench	A, B, H, K, O, T, W, X, Y, 70BR-D, and potential slant wells	< 100 feet	1 to 2	20 to 50	Conventional, Nested	Multilevel
			100 to 350 feet	2 to 4	20 to 50	Nested	Conventional, Multilevel
Plume Monitoring	Monitor average changes in chromium plume as the remediation progresses	L, N, U, V, Z, 10D, and 11D	90 to 390 feet	1 to 4	20 to 50	Conventional, Nested	Multilevel
Freshwater Injection Well Monitoring	Monitor water levels	J, Q, and S	150 to 220 feet	2 to 4	20 to 50	Nested	Conventional, Multilevel
Arsenic Monitoring	Monitor potential migration of arsenic from freshwater injection wells	AA, BB, CC, DD, EE, FF, GG, HH, II,	90 to 280 feet	1 to 2	20 to 50	Conventional, Nested	Multilevel
COPC Monitoring	Monitor potential COPC migration	I, J, U, V, W	30 to 280 feet	1 to 4	20 to 50	Conventional, Nested	Multilevel

Notes:
[1] Basis for type of monitoring can be found in the O&M Manual Volume 2 Tables 2.1-1 (Monitoring Program Wells and Surface Water Sampling Points) and 2.6-1 (Monitoring Program Wells and Surface Water Sampling Points for COPC Monitoring).

LEGEND

Area of Potential Effects (APE)

EIR Project Area

Existing Wells:

Monitoring Well

Provisional Wells:

Monitoring Well

Area for Potential Slant Well Screens

Planned Wells:

Remedy Monitoring Well

Area for Monitoring Well MW-T

Approximate extent of hexavalent chromium [Cr(VI)] concentrations exceeding 32 micrograms per liter (µg/L) at any depth in groundwater based on fourth quarter 2013 sampling events. Dashed where based on limited data.

Note:
All planned and provisional monitoring well l
ocations are approximate.

N

0 250 500 1,000 Feet

FIGURE 3.6-1
PROPOSED MONITORING WELL NETWORK
SUPPLEMENTAL PRE-FINAL (90%) DESIGN SUBMITTAL
FOR THE FINAL GROUNDWATER REMEDY
PG&E TOPOCK COMPRESSOR STATION,
NEEDLES, CALIFORNIA

CH2MHILL

Path: \\Zinfandel\proj\PacificGasElectricCo\TopockProgram\GIS\MapFiles\2014\CMS\Design91\FIG361_91pct_MWonly_LS_11x17_tbl2.mxd
ES102411163118BAO_(Supplemental 91%)_Fig_3-6-1_Prop_MW_Network.indd_012115_lho

FIGURE 4.1-1
PHOTO SIMULATIONS OF
PROPOSED BAT CAVE WASH CROSSING
SUPPLEMENTAL PRE-FINAL (90%) DESIGN SUBMITTAL
FOR THE FINAL GROUNDWATER REMEDY,
PG&E TOPOCK COMPRESSOR STATION,
NEEDLES, CALIFORNIA

CH2MHILL®

C/RAWP Figures

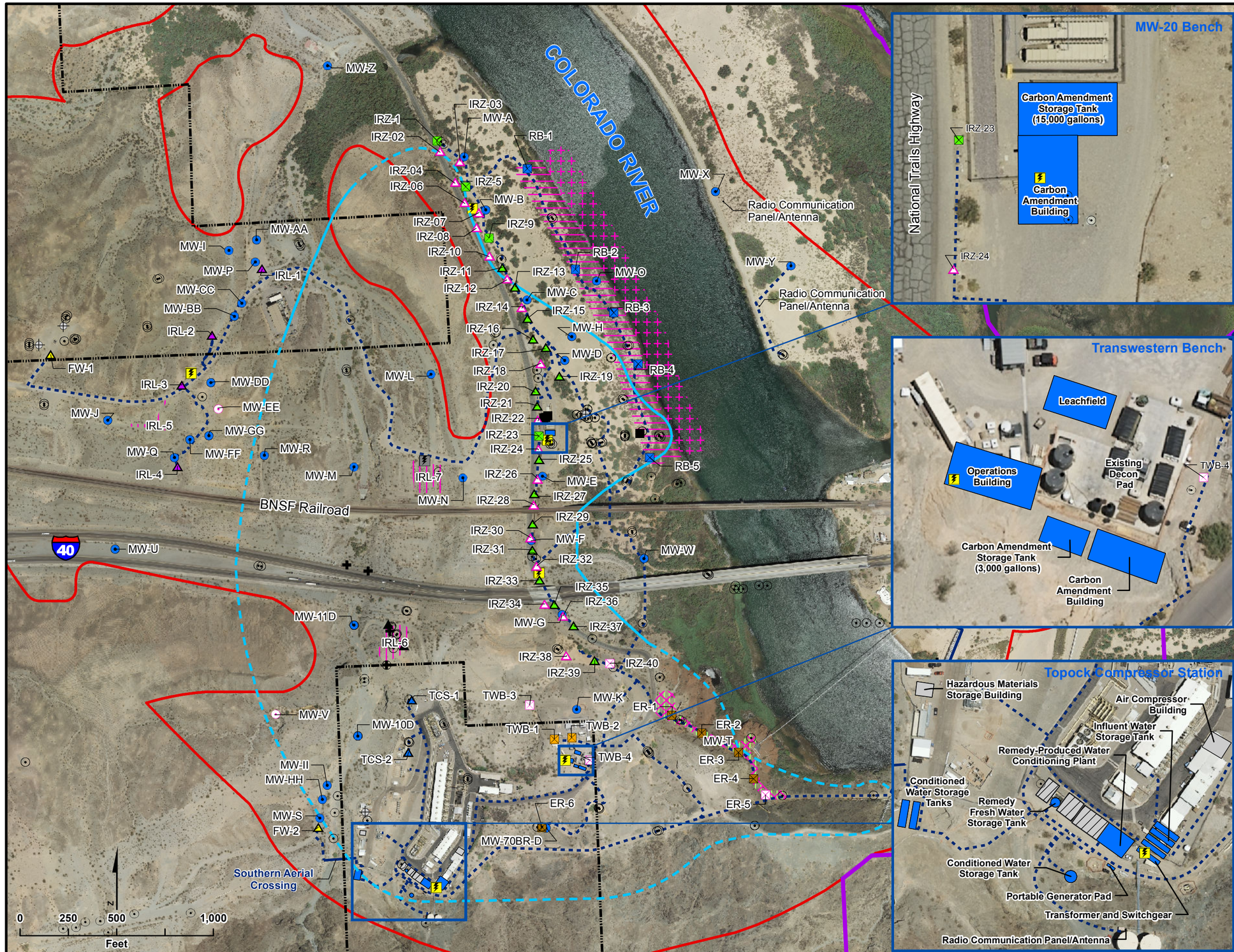

LEGEND

- Property Boundaries
- Area of Potential Effects (APE)
- EIR Project Area

Existing Wells:

- Extraction Well
- Injection Well
- Monitoring Well
- Water Supply Well

Provisional Wells:

(Items in Pink are Provisional)

- Extraction Well
- Injection Well
- Monitoring Well
- Area for East Ravine (ER) Well (ER-7 to ER-11)
- Area for Potential Slant Well Screens
- Area for Inner Recirculation Loop (IRL) Wells
- Area for River Bank Extraction Wells

Planned Wells:

- Extraction, East Ravine
- Extraction, National Trails Highway (NTH) In-situ Reactive Zone (IRZ)
- Extraction, Riverbank
- Extraction, Transwestern Bench
- Injection, Freshwater
- Injection, Inner Recirculation Loop
- Injection, NTH IRZ
- Injection, Topock Compressor Station
- Remedy Monitoring Well
- Recirculation Well
- Area for Monitoring Well MW-T

Pipeline Corridor for Remedy

- Aboveground Pipe
- Underground Pipe/Conduit

Remedy Facilities

- Planned Transformer
- Future Provisional Transformer
- Proposed Remedy Structure
- Contingent Freshwater Pre-injection Treatment System
- New Compressor Station Buildings (not part of Remedy)
- Approximate extent of hexavalent chromium [Cr(VI)] concentrations exceeding 32 micrograms per liter (µg/L) at any depth ingroundwater based on fourth quarter 2013 sampling events. Dashed where based on limited data.

Note:

1. Note that in compliance with EIR mitigation measure CUL-1a-9, as well as PA and CHPMP mitigation measures, the pipeline along the dirt road west of National Trails Hwy is located in an existing, previously disturbed, access road. In addition, the location of the road and pipeline was field verified and does not create any direct physical impact or effect on the Topock Maze, as it is manifested archaeologically, in compliance with EIR mitigation measure CUL-1a-10, PA, and CHPMP mitigation measures.
2. All well and structure locations are approximate.

FIGURE 3.1-1
GENERAL REMEDY SYSTEM LAYOUT - CALIFORNIA

SUPPLEMENTAL PRE-FINAL (90%) DESIGN SUBMITTAL
FOR THE FINAL GROUNDWATER REMEDY
PG&E TOPOCK COMPRESSOR STATION,
NEEDLES, CALIFORNIA

CH2MHILL

Path: \\zinfandel\Proj\PacificGasElectricCo\TopockProgram\GIS\MapFiles\2014\CMS\Design91\CRAWP_311.mxd

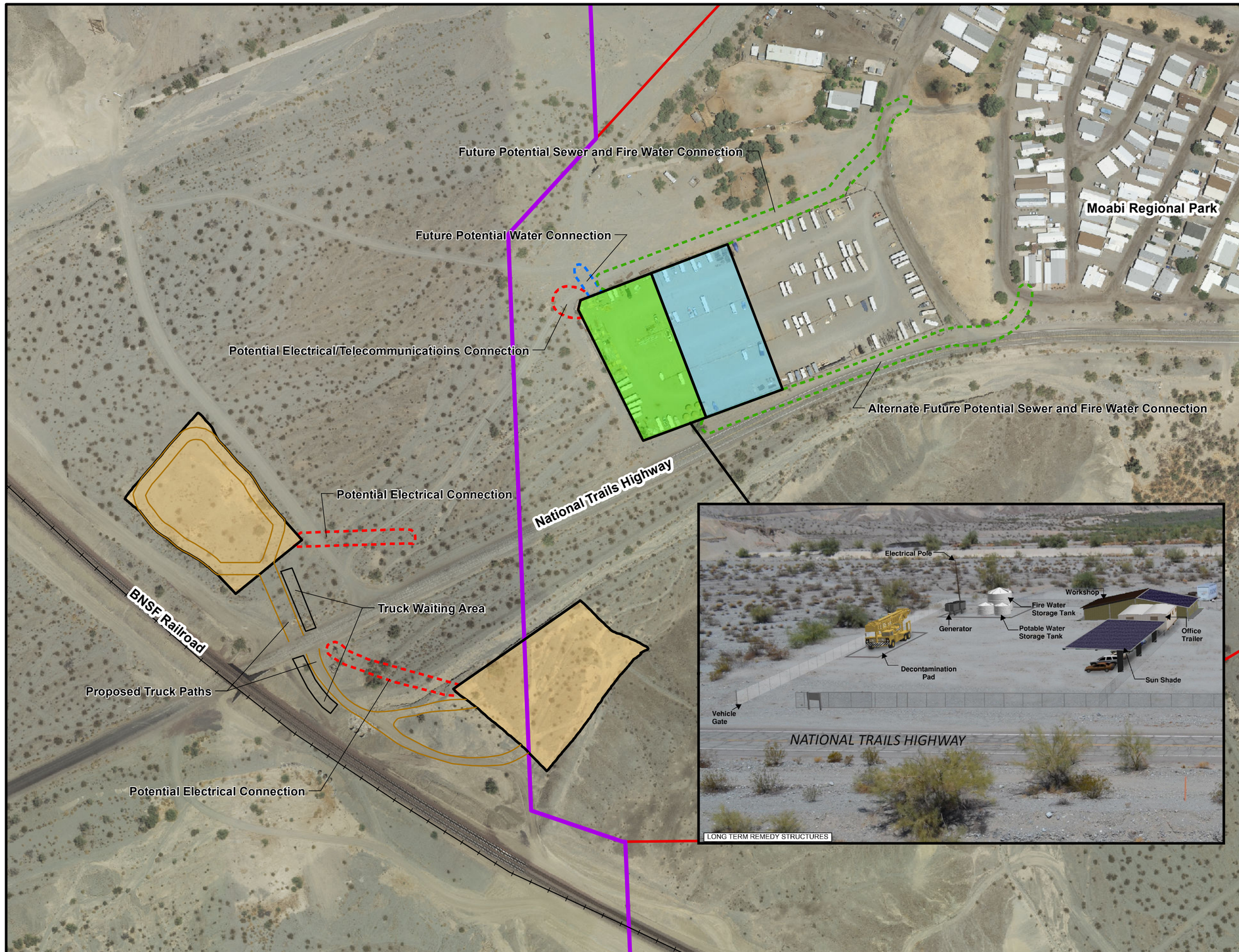

VICINITY MAP

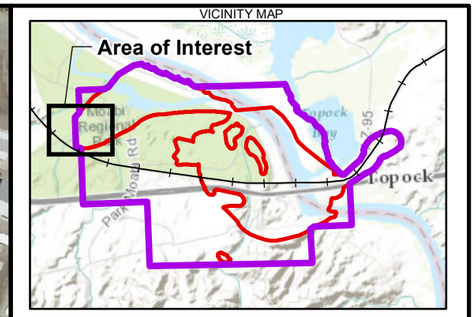

LEGEND

- Temporary Construction Laydown Area (1.3 acres approx.)
- Long Term Remedy Support Area (1.3 acres approx.)
- Soil Processing Area (1.55 acres approx.)
- Area of Potential Effects (APE)
- EIR Project Area

Notes:
1. Descriptions of activities/functions anticipated for the construction support areas are included in the Construction/Remedial Action Work Plan.
2. Descriptions of activities/functions anticipated for the long-term remedy support areas are included in Section 3.5 of the BOD, and the O&M Manual.

N

0 95 190 380 Feet

Service Layer Credits: Sources: Esri, DeLorme, NAVTEQ, TomTom, Intermap, increment P Corp., GEBCO, USGS, FAO, NPS, NRCAN, GeoBase, IGN, Kadaster NL, Ordnance Survey, Esri Japan, METI, Esri China (Hong Kong), swisstopo, and the GIS User Community

FIGURE 3.1-2
GENERAL REMEDY SYSTEM LAYOUT - MOABI REGIONAL PARK

SUPPLEMENTAL PRE-FINAL (90%) DESIGN SUBMITTAL FOR THE FINAL GROUNDWATER REMEDY
PG&E TOPOCK COMPRESSOR STATION, NEEDLES, CALIFORNIA

CH2MHILL

Path: \\Zinfandel\proj\PacificGasElectricCo\TopockProgram\GIS\MapFiles\2014\CMS\Design91\CRAWP_312.mxd

Site B

County Highway 10

HNWR-1A

HNWR-1

MW-X

Radio Communication Panel/Antenna

MW-Y

Radio Communication Panel/Antenna

Radio Communication Panel/Antenna

BNSF Railroad

40

Radio Communication Panel/Antenna

VICINITY MAP

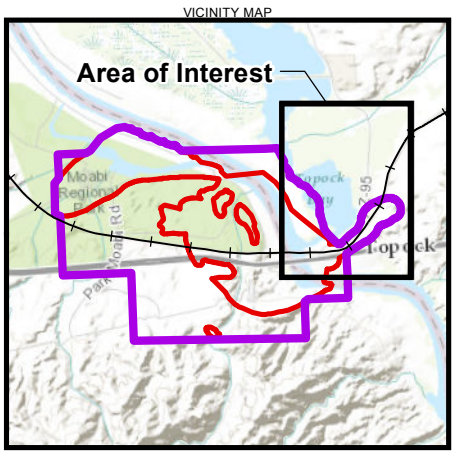

LEGEND

Existing Wells:

- Monitoring Well
- Water Supply Well

Planned Wells:

- Remedy Monitoring Well

Provisional Wells:

- Area for Potential Slant Well Screens

Pipeline Corridor for Remedy

- Aboveground Freshwater Pipe
- Underground Pipe/Conduit
- Future Provisional/Contingent Fresh Water Pipe

Note:
All wells and remedy structure locations are approximate.

- Proposed Remedy Structure
- Area of Potential Effects (APE)
- EIR Project Area

N

0 200 400 800 Feet

Service Layer Credits: Sources: Esri, DeLorme, NAVTEQ, TomTom, Intermap, increment P Corp., GEBCO, USGS, FAO, NPS, NRCAN, GeoBase, IGN, Kadaster NL, Ordnance Survey, Esri Japan, METI, Esri China (Hong Kong), swisstopo, and the GIS User Community

FIGURE 3.1-3
GENERAL REMEDY SYSTEM LAYOUT - ARIZONA

SUPPLEMENTAL PRE-FINAL (90%) DESIGN SUBMITTAL
FOR THE FINAL GROUNDWATER REMEDY
PG&E TOPOCK COMPRESSOR STATION,
NEEDLES, CALIFORNIA

CH2MHILL

Path: \\zinfandel\Proj\PacificGasElectricCo\TopockProgram\GIS\MapFiles\2014\CMS\Design91\CRAWP_313.mxd

LEGEND

- Underground Gas Supply Pipe
- Proposed Remedy Structure

Notes:

1. All remedy structure locations are approximate.

N

0 75 150 300 Feet

FIGURE 3.1-4
GENERAL REMEDY SYSTEM LAYOUT - TCS EVAPORATION PONDS
SUPPLEMENTAL PRE-FINAL (90%) DESIGN SUBMITTAL FOR THE FINAL GROUNDWATER REMEDY
PG&E TOPOCK COMPRESSOR STATION, NEEDLES, CALIFORNIA

CH2MHILL

BAO \\ZINFANDEL\PROJ\PACIFICGASELECTRICCO\TOPOCKPROGRAM\GIS\MAPFILES\2014\CMS\DESIGN91\FIG314_GEN_TCS_POND_PHOTO.MXD ECLARK1 12/29/2014 1:28:12 PM

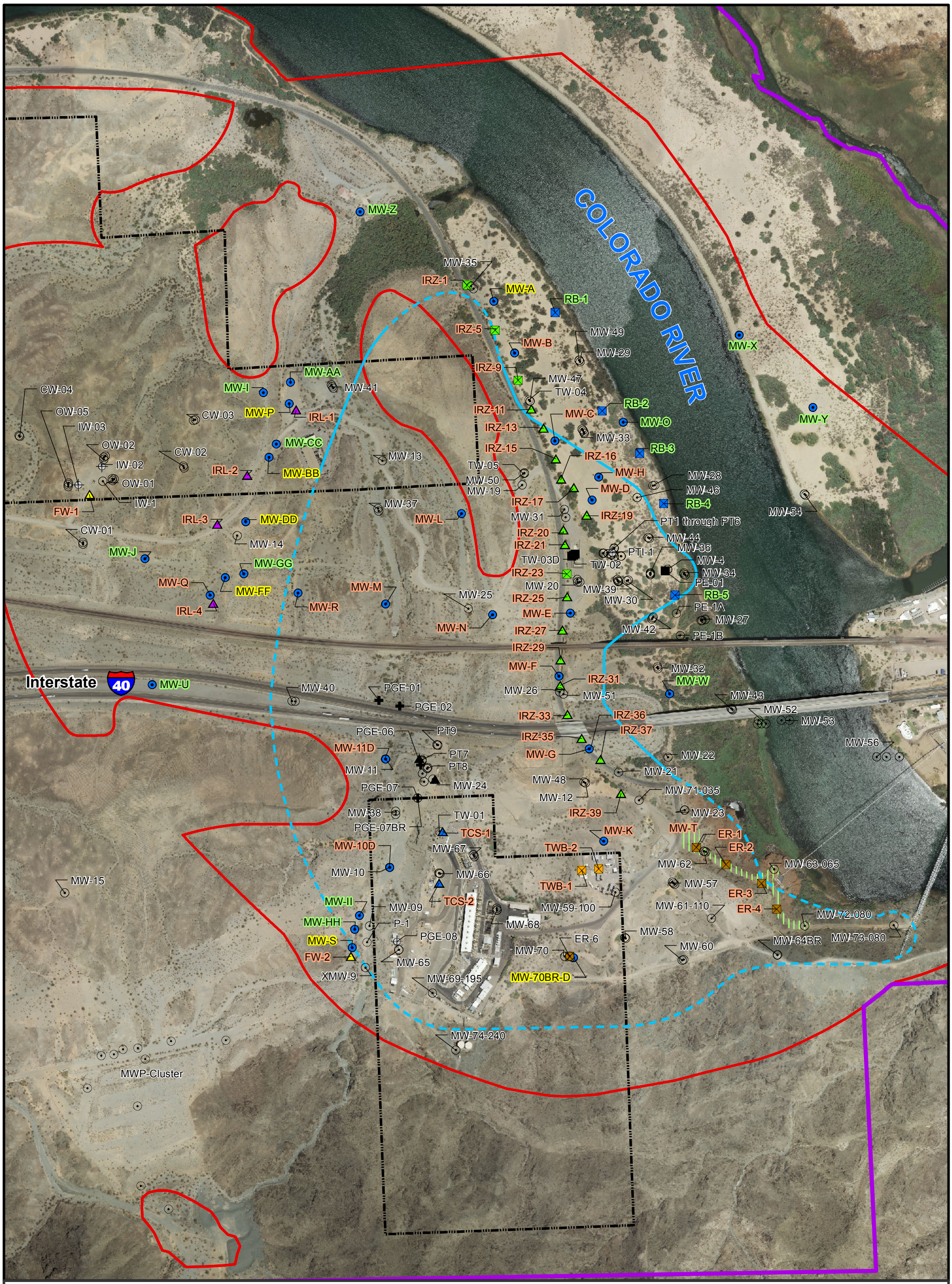

LEGEND

- Property Boundaries
- Area of Potential Effects (APE)
- EIR Project Area

Existing Wells:

- Extraction Well
- Injection Well
- Monitoring Well
- Water Supply Well

Well Category Highlighting:
Yellow Highlighting for Well Category 1
Green Highlighting for Well Category 2
Orange Highlighting for Well Category 3

Planned Wells:

- Extraction, East Ravine
- Extraction, National Trails Highway (NTH) In-situ Reactive Zone (IRZ)
- Extraction, Riverbank
- Extraction, Transwestern Bench
- Injection, Freshwater
- Injection, Inner Recirculation Loop
- Injection, NTH IRZ
- Injection, Topock Compressor Station
- Remedy Monitoring Well
- Recirculation Well
- Area for Monitoring Well MW-T

Approximate extent of hexavalent chromium [Cr(VI)] concentrations exceeding 32 micrograms per liter (µg/L) at any depth ingroundwater based on fourth quarter 2013 sampling events. Dashed where based on limited data.

Note:
All well and structure locations are approximate.

0 220 440 880 Feet

N

FIGURE 3.2-1
ESTIMATED APPROACH TO WELL NETWORK CONSTRUCTION
SUPPLEMENTAL PRE-FINAL (90%) DESIGN SUBMITTAL FOR THE FINAL GROUNDWATER REMEDY
PG&E TOPOCK COMPRESSOR STATION, NEEDLES, CALIFORNIA

CH2MHILL

Path: \\Zinfandel\proj\PacificGasElectricCo\TopockProgram\GIS\MapFiles\2014\CMS\Design91\FIG321_91pct_MCMod4_11x17.mxd

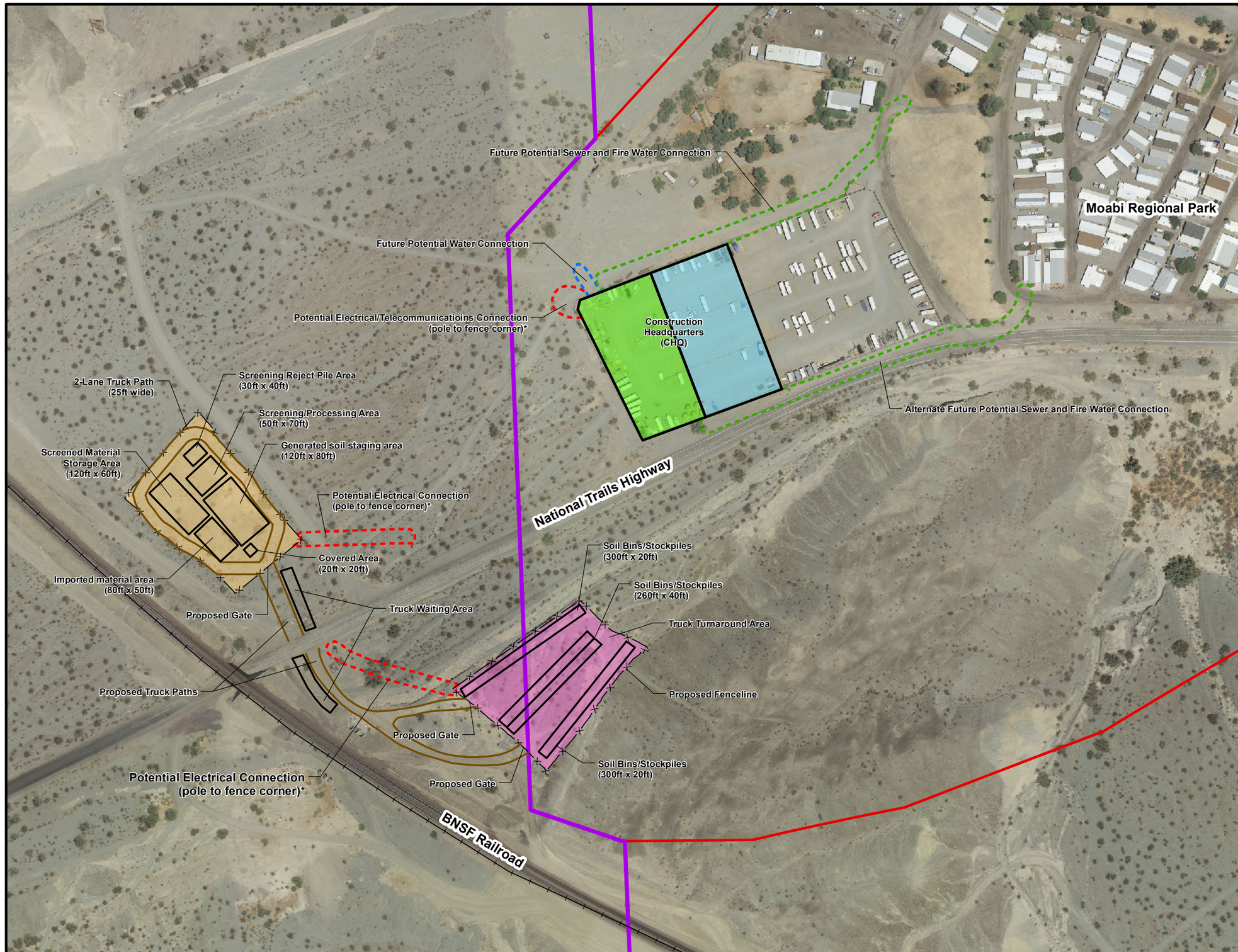

VICINITY MAP

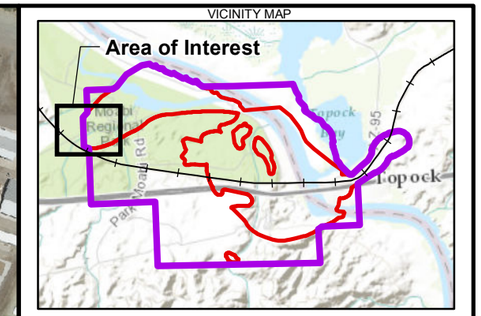

LEGEND

- Soil Area Fenceline
- Temporary Construction Laydown Area (1.3 acres approx.)
- Long Term Remedy Support Area (1.3 acres approx.)
- Soil Processing Area (1.55 acres approx.)
- Soil Storage Area (1.55 acres approx.)
- Area of Potential Effects (APE)
- EIR Project Area

Notes:

1. This is a conceptual layout. Final locations of facilities, piles, and bins may change within the areas shown.
2. Descriptions of activities/functions anticipated for the construction support areas are included in the Construction/Remedial Action Work Plan and Section 2.1.1 of this Supplemental 90%.
3. Descriptions of activities/functions anticipated for the long-term remedy support areas are included in Section 3.5 of the BOD, the O&M Manual, and Section 2.1.1 of this Supplemental 90%.
4. Soil processing area may also be used for soil storage.
5. Final layouts of soil processing and soil storage areas to be determined by contractor. One potential layout for each area is shown.

* Final locations will be determined by Needles

0 80 160 320
Feet

N

Service Layer Credits: Sources: Esri, DeLorme, NAVTEQ, TomTom, Intermap, increment P Corp., GEBCO, USGS, FAO, NPS, NRCAN, GeoBase, IGN, Kadaster NL, Ordnance Survey, Esri Japan, METI, Esri China (Hong Kong), swisstopo, and the GIS User Community

FIGURE 4.2-1
LOCATIONS OF CONSTRUCTION FACILITIES IN MOABI REGIONAL PARK

SUPPLEMENTAL PRE-FINAL (90%) DESIGN SUBMITTAL FOR THE FINAL GROUNDWATER REMEDY
PG&E TOPOCK COMPRESSOR STATION,
NEEDLES, CALIFORNIA

CH2MHILL

Path: \\Zinfandel\proj\PacificGasElectricCo\TopockProgram\GIS\MapFiles\2014\CMS\Design91\CRAWP_421.mxd

Legend

- Fenceline (Buildings offset 10 feet from fenceline)
- Temporary Construction Laydown Area (1.3 acres approx.)
- Long Term Remedy Support Area (1.3 acres approx.)

Notes:

1. All remedy structure locations are approximate.
2. Descriptions of activities/functions anticipated for the construction support areas are included in the Construction/Remedial Action Work Plan.
3. Descriptions of activities/functions anticipated for the long-term remedy support areas are included in Section 3.5 of the BOD and the O&M Manual.
4. Temporary storage/conex boxes (not shown) may be used within the fenced Construction Headquarters.
5. Final layout of temporary construction laydown area to be determined by contractor. Representative use at area is shown.

* Final locations will be determined by Needles

N

0 100 200 300

1 " = 100 '

PACIFIC GAS AND ELECTRIC COMPANY
TOPOCK COMPRESSOR STATION, NEEDLES, CALIFORNIA
SUPPLEMENTAL PRE-FINAL (90%) DESIGN SUBMITTAL FOR THE FINAL GROUNDWATER REMEDY

CONSTRUCTION HEADQUARTERS SPATIAL PLANNING

ARCADIS

FIGURE
4.2-2

File Path: C:\Projects\ETI\CPGE-Topock\MXD\CHQ\CHQ_Park_Moabi_20150119.mxd - 1/19/2015

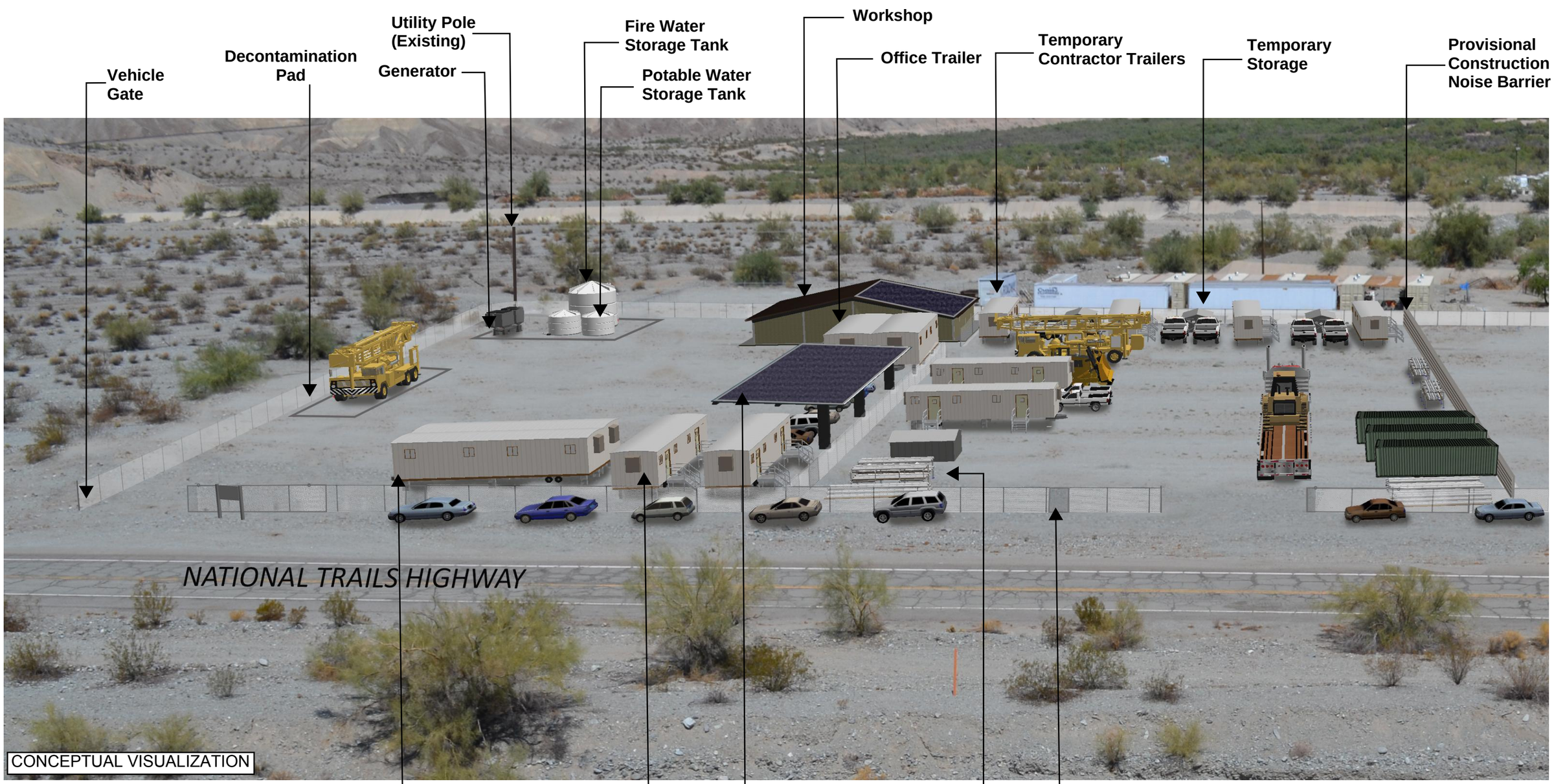

Notes:
1. All remedy structure locations are approximate.
2. Final layout of the temporary construction laydown area to be determined by contractor. Representative layout is shown.

PACIFIC GAS AND ELECTRIC COMPANY
TOPOCK COMPRESSOR STATION
NEEDLES, CALIFORNIA
SUPPLEMENTAL PRE-FINAL (90%) DESIGN SUBMITTAL FOR THE FINAL GROUNDWATER REMEDY

PHOTO SIMULATION OF NEW REMEDY BUILDING/STRUCTURES IN MOABI REGIONAL PARK

ARCADIS

FIGURE
4.2-2A

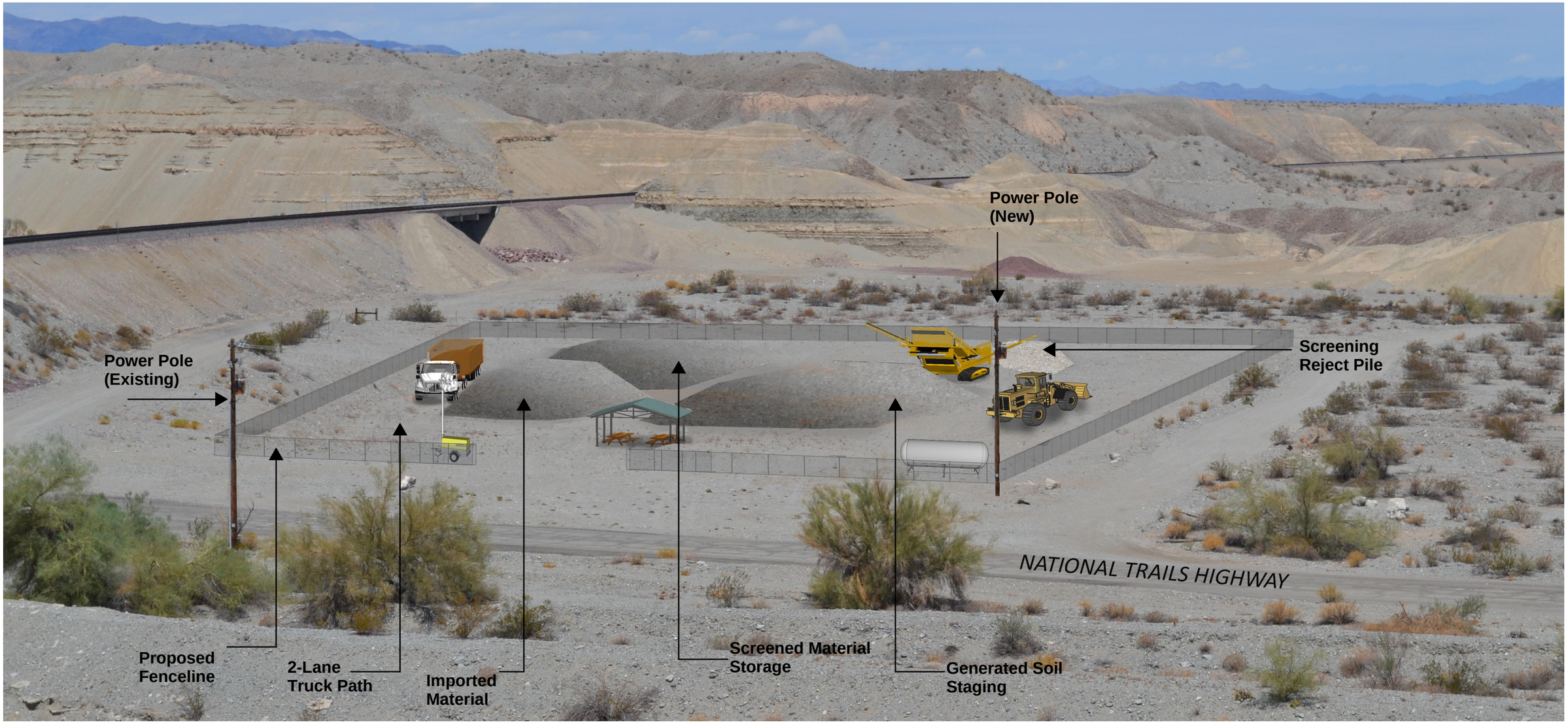

Note: Soil storage may also occur at the soil processing area.

PACIFIC GAS AND ELECTRIC COMPANY
TOPOCK COMPRESSOR STATION
NEEDLES, CALIFORNIA
SUPPLEMENTAL PRE-FINAL (90%) DESIGN SUBMITTAL FOR THE FINAL GROUNDWATER REMEDY

PHOTO SIMULATION OF TEMPORARY SOIL PROCESSING AREA IN MOABI REGIONAL PARK

ARCADIS

FIGURE
4.2-2B

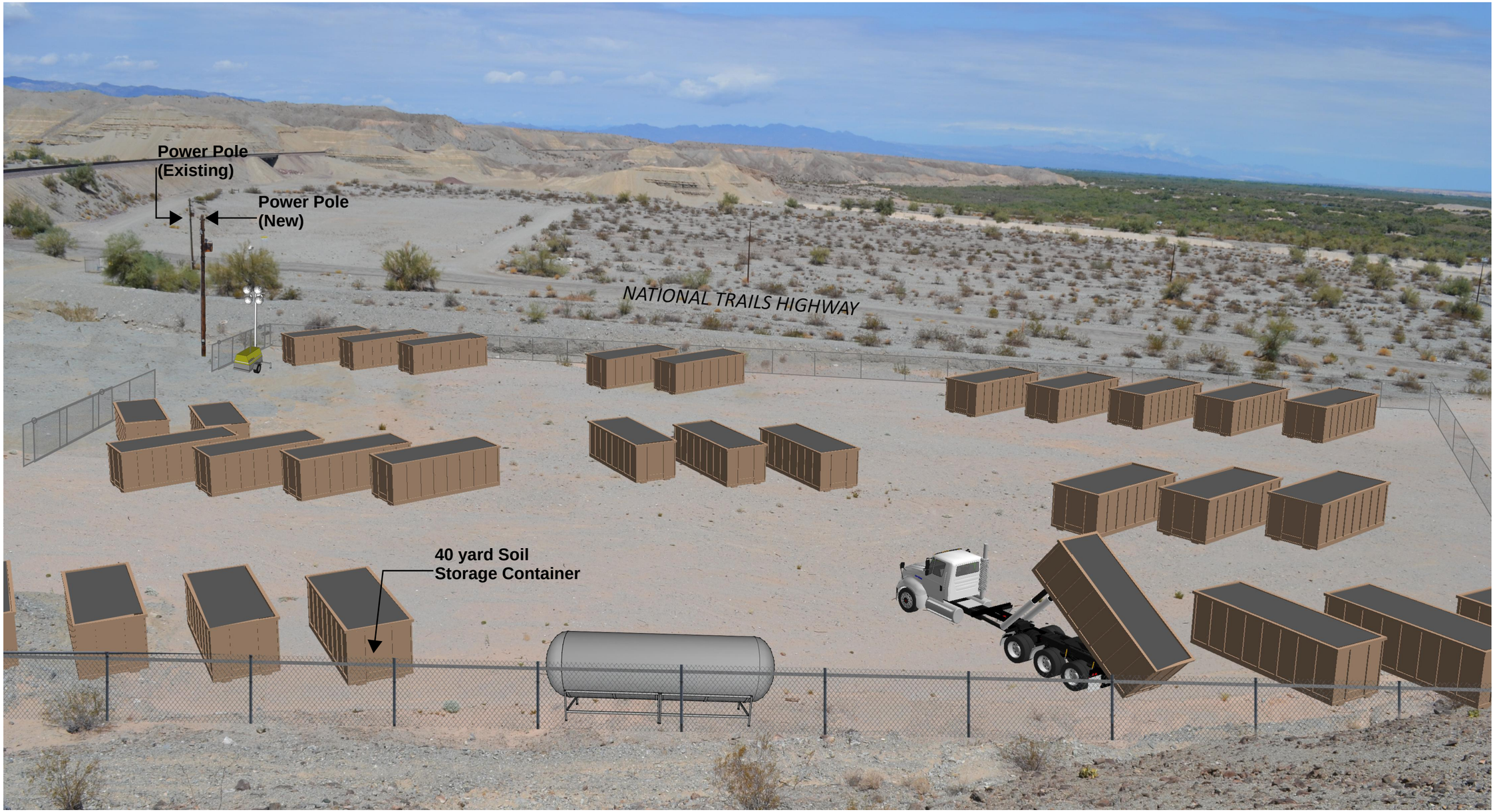

Notes:
1. The layout shown is for conceptual visualization purposes and may be modified as necessary. Soil may also be stored in drums/small containers or as stockpiles.
2. Other areas not shown.

PACIFIC GAS AND ELECTRIC COMPANY
TOPOCK COMPRESSOR STATION
NEEDLES, CALIFORNIA
SUPPLEMENTAL PRE-FINAL (90%) DESIGN SUBMITTAL FOR THE FINAL GROUNDWATER REMEDY

PHOTO SIMULATION OF SOIL STORAGE AREA IN MOABI REGIONAL PARK

ARCADIS

FIGURE
4.2-2C

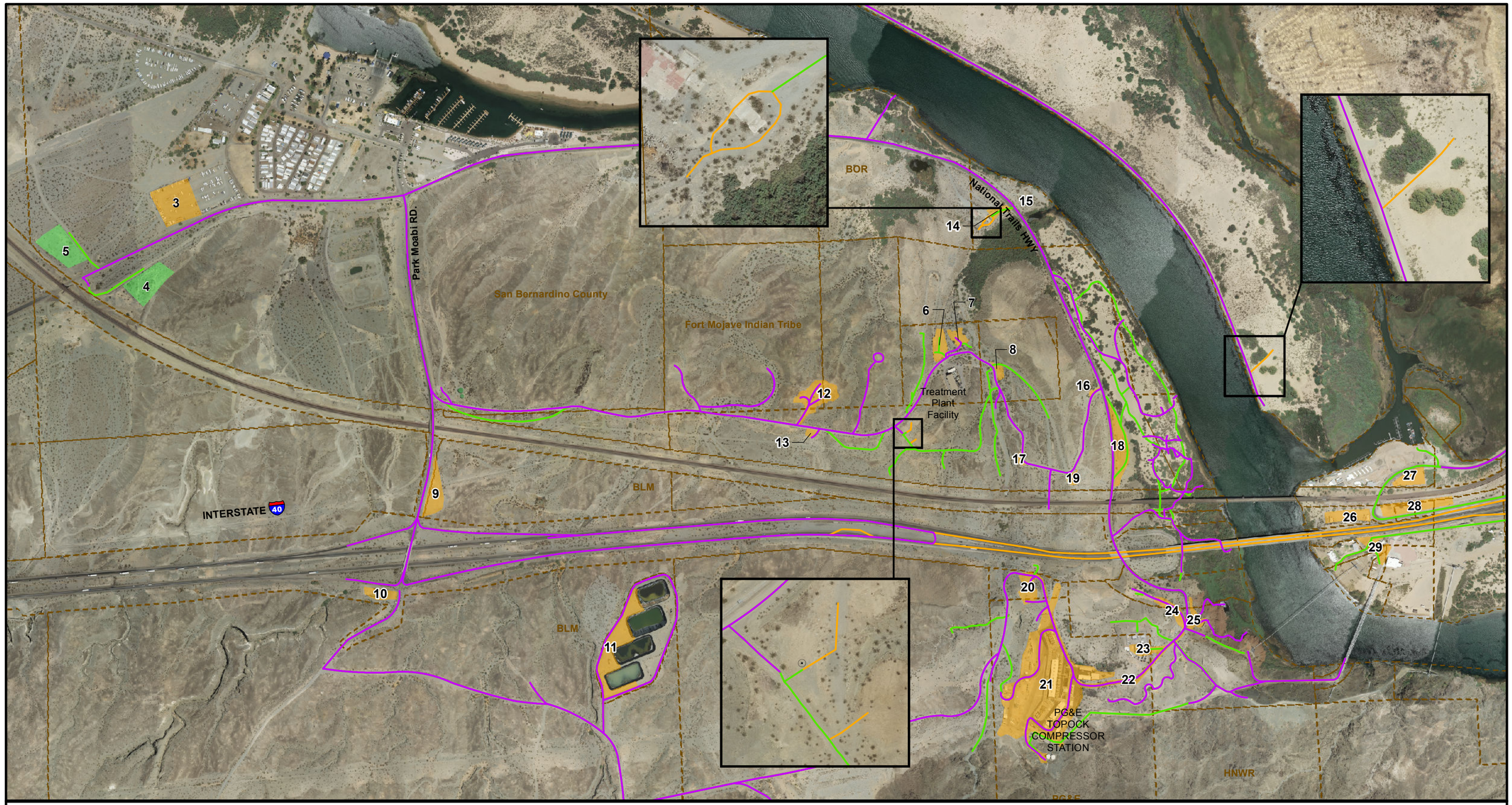

LEGEND

- Existing Access Route
- New Remedy Access Route
- New Remedy Route (Revised for Supplemental Design)
- Potential Soil Processing and Storage Areas for Remediation Project
- Proposed Staging Areas for Remediation Project

Notes:

1. Area 3 (CHQ) will be used as the primary truck inspection area. Areas #9, #18, and #23 or other staging areas might also be used depending on the specific construction activity.
2. Decontamination pads will be located in Area #3 (Construction Headquarters), Area #21 (Topock Compressor Station), and Area #23 (Transwestern Bench).
3. Areas #15, 16, 17, and 19 will not be used as staging areas. Areas #16, 17, and 19 may be part of the primary work zones for remedy infrastructure along the access road.
4. Locations for access routes are approximate.

N

0 800
Feet

FIGURE 4.2-3
CONSTRUCTION SITE PLAN AND ACCESS ROUTES
SUPPLEMENTAL PRE-FINAL (90%) DESIGN SUBMITTAL
FOR THE FINAL GROUNDWATER REMEDY
PG&E TOPOCK COMPRESSOR STATION
NEEDLES, CALIFORNIA

CH2MHILL

Path: \\zinfandel\Proj\PacificGasElectricCo\TopockProgram\GIS\MapFiles\2014\CMS\Design91\CRAWP_423.mxd Date Saved: 1/21/2015 8:46:41 AM

Exhibit

Updated exhibit for the:

- O&M Manual (Appendix L of the Basis of Design Report Submittal for the Final Groundwater Remedy)
- Construction/Remedial Action Work Plan for the Final Groundwater Remedy (*Note that the updated C/RAWP Exhibit 3.1-2B is not presented herein because it is the same as BOD Table ES-2B; please refer to Table ES-2B in the BOD Tables section*.)

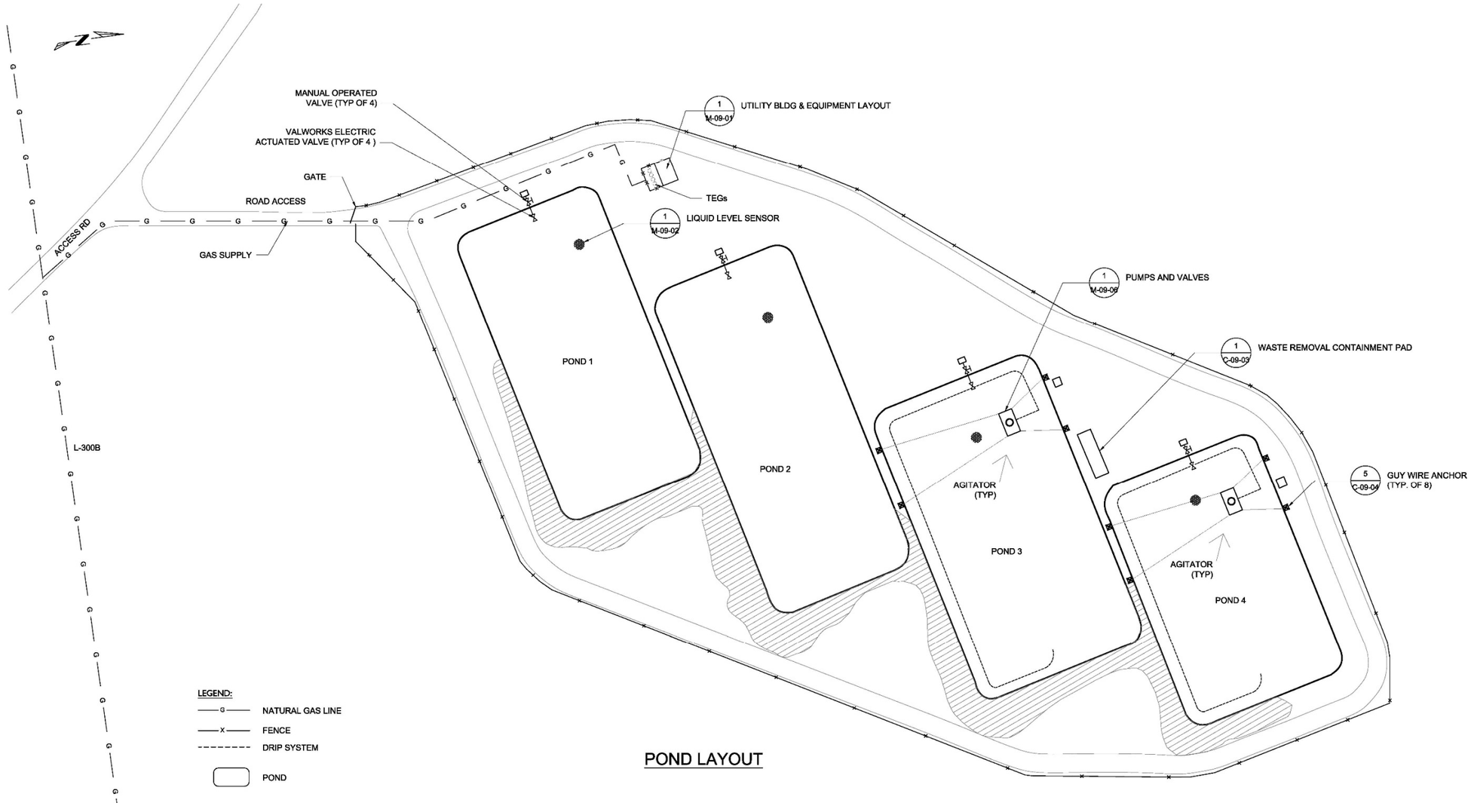

EXHIBIT 2.7-1
Layout of Evaporation Enhancement Equipment at TCS Evaporation Ponds
Groundwater Remedy Operation and Maintenance Manual
Volume 1: Operation and Maintenance Plan
PG&E Topock Compressor Station, Needles, California

BOD Appendix A10
Technical Memorandum: Assessment of Biological Resources for the Proposed Soil Management Areas

Assessment of Biological Resources for the Proposed Soil Management Area: Final Groundwater Remedy, Topock Compressor Station, California

PREPARED FOR: Virginia Strohl/PG&E

PREPARED BY: Russell Huddleston and Steve Long /CH2M HILL

COPIES: Curt Russell/PG&E
Marjorie Eisert/CH2M HILL

DATE: January 19, 2015

PROJECT NUMBER: 433404.01.TS

Introduction

In conformance with direction from the Department of Toxic Substance Control (DTSC) and Department of Interior (DOI), this technical memorandum presents additional details on biological resources associated with the additional 6.74 acres that are located outside of the original Environmental Impact Report (EIR) Study Area. This additional acreage is required for soil management during construction and operation of the Final Groundwater Remedy, Topock Compressor Station.

During the design phase of the final groundwater remedy it was determined that the additional area was needed for soil management. An additional 6.74 acres outside of the EIR Study Area located in the western portion of Moabi Regional Park, within disturbed areas, were deemed suitable for these activities (Figure 1).

This technical memorandum provides general information on the flora and fauna observed in the proposed soil management area and provides supplemental information on the following biological resources and documents:

- Mature Vegetation (Aesthetics and Visual Resources)
  - *Topock Compressor Station Groundwater Remediation Project Mature Plants Survey Report*, January 17, 2012
  - *Addendum to the January 2012 Mature Plant Report for the Topock Compressor Station Final Groundwater Remedy*, May 19, 2014
- Ethnobotanical Plants
  - *Revised Final - Topock Groundwater Remediation Project Ethnobotany Survey Report*, January 15, 2014
  - *Supplemental Ethnobotanical Plant Surveys for the Pacific Gas and Electric Company's Topock Compressor Station, San Bernardino County, California*, February 28, 2014
- Wetlands and Waters
  - *Wetlands and Waters of the United States, Final Delineation for the Topock Compressor Station Groundwater Remediation Project, San Bernardino County, California*, April 18, 2014
  - *Riparian Vegetation and California Department of Fish and Wildlife Jurisdiction for the Topock Compressor Station Groundwater Remediation Project San Bernardino County, California*, May 9, 2014

The additional acreage is located entirely on federal lands managed by the Bureau of Land Management that are currently leased to San Bernardino County. Therefore, the proposed soil management area would not result in any additional impacts to the Havasu National Wildlife Refuge.

Methods

Notes on the vegetation and incidental wildlife observations in the proposed soil management area were noted during two reconnaissance surveys. The first survey included the area on the south side of the National Trails Highway during botanical surveys conducted by Russell Huddleston and Michelle Balk on March 14, 2013. Additional reconnaissance-level surveys that included the entire proposed soil management area were conducted by Russell Huddleston and Steve Long on April 10, 2014, as part of the 60 percent design site walk together with design engineering staff.

Focused biological surveys of the proposed soil management area were completed by Mr. Huddleston and Mr. Long on November 19, 2014. The primary objective of the focused surveys was to systematically walk the area and map mature vegetation, ethnobotanical plant species, wetlands, and water resources and note any other significant biological resources such as potential desert tortoise (*Gopherus agassizii*) burrows. Methodology specific to each of these focused surveys is provided in the following sections.

Flora and Fauna

Although no protocol-level floristic surveys were conducted in the area, all plant species observed during the April 10, 2014, site walk and November 10, 2014, focused surveys were noted and recorded. Given the highly disturbed nature of the area and the sparse vegetation, these observations were considered adequate to characterize the flora.

Reconnaissance-level wildlife surveys were conducted by systematically walking the area during the November 19, 2014, survey to search for special-status wildlife species, especially desert tortoises, desert tortoise burrows, or their sign (scat, tracks, burrows, shells, bones, etc.). Particular emphasis was placed on searching around the bases of creosote (*Larrea tridentata*) bushes and along the banks of the wash feature located on the south side of the National Trails Highway. Incidental observations of other wildlife including birds, small mammal burrows, tracks, and scat were also noted.

Mature Vegetation

For the purpose of the survey, mature vegetation is defined as living trees, large or prominent shrubs, and tall, predominantly herbaceous plants that were considered important to the aesthetic value. Seedlings, saplings, low to moderate shrubs (generally less than 6 feet tall), and other immature plants were not mapped due to their small stature. Survey methods followed the same protocols developed for EIR Mitigation Measures AES-1a and AES-2b as well as stakeholder comments (DTSC, 2011).

For each mature plant, the height of the plant was recorded based on the following four height categories:

- short (< 6 feet),
- medium (≥ 6 and < 12 feet),
- tall (≥ 12 and < 20 feet), or
- very tall (≥ 20 feet).

Plant health was also assessed using the following three categories:

- good (plants with no dead or damaged branches or other signs of branch senescence),
- fair (plants with a few dead or senescent branches), or
- poor (plants with more than half of the branches dead or damaged).

Mature plants in the additional soil management area were identified to species and mapped using a Trimble Geo XT global positioning system (GPS) unit.

Ethnobotanical Plants

A plant species was considered culturally significant if it occurred on the list of Colorado River Indian Ethnobotany in the Appendix PLA in the EIR (DTSC, 2011). In addition, arrow weed (*Pluchea sericea*) and *Lycium* spp. were also addressed as species with cultural importance, based on comments from DOI during the 60% Constructability Review. Any live species included in Appendix PLA, including arrow weed and *Lycium* spp., observed in the area were mapped with a Trimble GeoXT GPS unit, regardless of size and health.

Wetlands and Waters

No wetlands were identified in the proposed soil management area. The limits of an ephemeral wash were delineated based on guidance and procedures provided in *A Field Guide to Identification of the Ordinary High Water Mark (OHWM) in the Arid West Region of the Western United States* (Lichvar and McColley, 2008) and the *Updated Datasheet for the Identification of the Ordinary High Water Mark (OHWM) in the Arid West Region of the Western United States* (Curtis and Lichvar, 2010). Field indicators included defined vertical banks, drift deposits, and soil cracks. The limits of the ordinary high water were mapped in the field using a Trimble GeoXT GPS unit.

Results

The following sections provide a general description of the area as well as the results of the field surveys. Representative site photographs are provided in Attachment 1.

Site Description and Vegetation

The proposed soil management area on the north side of the National Trails Highway is located in a large, open depression characterized by a gravelly substrate. This area was previously used as a borrow pit by the Burlington Northern Santa Fe (BNSF) railroad and is currently used as a parking and staging area for off-road recreational vehicles (Figure 2). Vegetation within this area is sparse, consisting primarily of scattered, common annuals observed elsewhere in the EIR project area and a few small re-sprouting creosote bush shrubs and blue palo verde (*Parkinsonia florida*) seedlings. Table 1 provides a list of plant species observed in the area.

The proposed soil management area on the south side of the road was recently (early 2013) cleared and graded for a paint ball game sponsored by the Pirate Cove Resort. During botanical surveys conducted on Mach 14, 2013, this area consisted of open sands with scattered barrels (used during the paintball game) and was devoid of any vegetation (Figure 2). During the November 19, 2014, surveys a few scattered common annual plants and some small re-sprouting creosote, blue palo verde, and desert smoke tree (*Psorothamnus spinosus*) seedlings were noted in the cleared area.

TABLE 1
Vascular Plant Species Observed in the Proposed Soil Management Area

Scientific name	Common name
AMARANTHACEAE	amaranth family
Tidestromia oblongifolia	honeysweet
ASTERACEAE	sunflower family
Ambrosia salsola	cheesebush
Bebbia juncea var. *aspera*	sweetbush
Chaenactis carphoclinia	pebble pincushion
Encelia farinosa	brittlebush
Geraea canescens	desert sunflower
Palafoxia arida	Spanish needle

TABLE 1
Vascular Plant Species Observed in the Proposed Soil Management Area

Scientific name	Common name
BORAGINACEAE	borage family
Cryptantha angustifolia	narrow-leaved cryptantha
Phacelia crenulata ssp. *ambigua*	notch-leaved phacelia
CACTACEAE	cactus family
Opuntia basilaris var. *basilaris*	beavertail
EUPHORBIACEAE	spurge family
Chamaesyce polycarpa	small-seeded spurge
FABACEAE	legume family
Dalea mollis	hairy indigo-pea
Lupinus arizonicus	Arizona lupine
Marina parryi	Parry's marina
Parkinsonia florida	blue palo verde
Psorothamnus spinosus	smoke tree
Senegalia greggii	catclaw acacia
GERANIACEAE	geranium family
Erodium cicutarium	red-stemmed filaree
MALVACEAE	mallow family
Sphaeralcea ambigua var. *ambigua*	apricot mallow
PLANTAGINACEAE	plantain family
Plantago ovata	ovate plantain
POLYGONACEAE	buckwheat family
Eriogonum deflexum var. *deflexum*	flat-crown buckwheat
Eriogonum inflatum var. *inflatum*	inflated desert trumpet
SOLANACEAE	nightshade family
Physalis crassifolia	thick-leaf ground cherry
ZYGOPHYLLACEAE	caltrop family
Larrea tridentata	creosote bush
POACEAE	grass family
Aristida adscensionis	six-weeks three awn
Bouteloua aristidoides	needle grama
Bouteloua barbata ssp. *barbata*	six weeks grama
Schismus barbatus	Mediterranean grass

Note: Taxonomy follows *The Jepson Manual 2nd Edition* (Baldwin et al., 2012)

Wildlife

The disturbed nature of the proposed soil management area and the general absence of vegetation provides minimal habitat for wildlife species. Observations during the November 19, 2014, survey were limited to a few birds including white crown sparrows (*Zonotrichia leucophrys*) and a single American kestrel (*Falco sparverius*). Other wildlife sign included a few small mammal burrows, small mammal and bird tracks, a few ant mounds, and wild burro (*Equus asinus*) scat.

No potential desert tortoise burrows were observed in the area. A number of special-status bird species including bank swallow (*Riparia riparia*), Bell's vireo (*Vireo belli*), southwest willow flycatcher (*Empidonax traillii extimus*), yellow-billed cuckoo (*Coccyzus americanus*), and Yuma clapper rail (*Rallus longirostris yumanensis*) have been observed in the EIR project area. However, suitable habitat for these species including riparian, emergent wetland, woodlands, and dense shrubby areas are absent from the area studied for this memorandum.

Mature Plants

Due to the highly disturbed nature of the area, mature vegetation is generally sparse (Figure 3). Table 2 lists the mature vegetation identified including blue palo verde, desert smoke tree, and catclaw acacia (*Senegalia greggii*). All of the plants were considered to be in good to fair condition.

TABLE 2
Mature Plants Observed in the 6.74-acre Additional Soil Management Area

Common Name	Scientific Name	Size	Condition	UTM X	UTM Y
Blue palo verde	*Parkinsonia florida*	Tall	Good	727161.8	3845223.6
Blue palo verde	*Parkinsonia florida*	Tall	Good	727233.8	3845162.3
Blue palo verde	*Parkinsonia florida*	Tall	Good	727121.7	3845236.3
Blue palo verde	*Parkinsonia florida*	Med	Good	727140.9	3845241.0
Blue palo verde	*Parkinsonia florida*	Short	Good	727137.5	3845248.8
Blue palo verde	*Parkinsonia florida*	Short	Good	727259.0	3845264.5
Blue palo verde	*Parkinsonia florida*	Short	Good	727258.6	3845255.7
Blue palo verde	*Parkinsonia florida*	Short	Good	727244.4	3845258.1
Blue palo verde	*Parkinsonia florida*	Short	Good	727240.2	3845253.3
Blue palo verde	*Parkinsonia florida*	Short	Good	727236.9	3845253.2
Blue palo verde	*Parkinsonia florida*	Short	Good	727198.0	3845220.2
Blue palo verde	*Parkinsonia florida*	Short	Good	727199.1	3845204.6
Blue palo verde	*Parkinsonia florida*	Short	Good	727164.9	3845196.6
Blue palo verde	*Parkinsonia florida*	Short	Good	727161.3	3845290.7
Blue palo verde	*Parkinsonia florida*	Short	Good	727156.3	3845297.1
Blue palo verde	*Parkinsonia florida*	Short	Good	727192.7	3845300.3
Blue palo verde	*Parkinsonia florida*	Short	Good	727186.4	3845298.1
Blue palo verde	*Parkinsonia florida*	Short	Good	727181.6	3845293.2
Blue palo verde	*Parkinsonia florida*	Short	Good	727179.8	3845293.0
Desert smoke tree	*Psorothamnus spinosus*	Tall	Good	727193.4	3845203.4
Desert smoke tree	*Psorothamnus spinosus*	Med	Fair	727136.1	3845247.7
Catclaw acacia	*Senegalia greggii*	Short	Fair	727245.7	3845167.1
Catclaw acacia	*Senegalia greggii*	Short	Fair	727178.6	3845293.0

Coordinates are in UTM NAD 83 Zone 11N

Ethnobotanical Plants

The only culturally sensitive plant species that was observed in the proposed soil management area was blue palo verde. With the exception of four larger trees, most of the palo verde consisted of small seedlings or saplings. Several small seedlings were observed in the previously cleared area (paint ball game site) south of the National Trails Highway, including several in the EIR survey area (Figure 4). These seedlings are included in this memorandum because they were not present during earlier surveys.

Wetlands and Waters

No wetlands were identified in the proposed soil management area. The only water feature identified is a channelized, ephemeral wash (Figure 5). The eastern portion of the wash was included in the wetland delineation of the EIR project area. The wash originates at three 8.5-foot-diameter corrugated metal pipe culverts installed under the BNSF railroad track. An existing access road is located just east of the culvert outfall and west of the clearly defined wash channel. The access road is in functioning condition, but exhibits some evidence of erosion resulting from high flow events.

Most of this water feature is characterized by a relatively uniform bed with steep side slopes. The substrate consists of coarse sand with scattered pebbles and cobbles and boulders. Vegetation within the channel includes several small blue palo verde saplings along the edges with scattered creosote bush, brittlebush (*Encelia farinosa*), honeysweet (*Tidestromia oblongifolia*), small-seeded spurge (*Chamaesyce polycarpa*, and Spanish needle (*Palafoxia arida*) within and along the channel. The datasheet and photographs associated with Transect A (shown on Figure 5) are provided in Attachment 2.

Consistent with the existing wetland delineation report, this portion of the wash was classified as a Riverine Intermittent Stream Bed Cobble-Gravel Temporarily Flooded (R4SB3A) consistent with the previously mapped feature. The additional 0.29 acre of waters of the U.S. identified in the proposed soil management area results in a total of 56.65 acres of R2SB3A waters and increased the grand total of waters of the U.S. that occur in the EIR project area to 199.55 acres. Table 3 provides an updated summary of wetland acreages for the entire project area.

TABLE 3
Updated Summary of Wetland and Other Waters of the U.S. identified in the Survey Area

Feature ID	Acreage	Wetlands or Other Waters of the U.S
Riverine Wetlands		
R2UB2 – Colorado River	88.79	Waters of the U.S.
R2UB2x – Park Moabi Slough	29.52	Waters of the U.S.
R4SB3A – Ephemeral Washes / Drainages	**56.65**	**Waters of the U.S.**
R4SB4A – Sacramento Wash	10.63	Waters of the U.S.
Palustrine Wetlands		
PEMH – Shore Zone Wetlands; Topock Marsh; Pond	2.19	Wetlands
PEMC – Adjacent Wetlands	2.39	Wetlands
PSSB – Adjacent Wetlands	0.12	Wetlands
PSSA – Scrub-Shrub Wetlands (Washes)	9.15	Wetlands
PUBHx – Park Moabi Pond: P-1	0.11	Waters of the U.S.
Updated Total	**199.55**	

Note: Bold text represents updated acreage

Impact Assessment

The following sections provide a preliminary assessment of impacts to biological resources based on the proposed access routes and soil management area as shown in Attachment 3.

Special-Status Plants and Wildlife

The proposed soil management areas is highly disturbed and sparsely vegetated. No rare plants were noted during the site surveys. The lack of vegetation provides minimal cover for wildlife species. No evidence of desert tortoise was noted and key habitat elements used by rare bird species such as wetlands, riparian, and

dense shrubby areas are absent from the site. The use of these areas is, therefore, not likely to have an impact on special-status plants or wildlife species.

Mature Plants

With the exception of a single, tall desert smoke tree and a small blue palo verde, most of the mature plants occur around the outer edges of the proposed soil management area or along the edges of the ephemeral wash (Figure 3). Based on the preliminary design plans (Attachment 3), the proposed truck waiting area on the south side of the National Trails Highway would affect one tall blue palo verde tree. However, when this impact was raised with the design engineers, it was noted that the area could be adjusted to avoid impacts to this tree. Therefore, no additional impacts to mature plants would occur.

Ethnobotanical Plants

Thirty-four blue palo verde were identified in the proposed soil management area and an additional nine small seedlings were mapped within the existing EIR project area (Figure 4). As described above, efforts will be made to avoid impacts to larger trees. Twelve palo verde seedlings are present in the disturbed areas where soil staging and storage would occur in the proposed soil management area. These seedlings will be relocated to one of the revegetation areas.

Wetlands and Waters

An additional 0.29 acre of riverine wetlands are present in the proposed soil management area (Figure 5). With the exception of the use of an existing access road that crosses through the wash just below the culvert outfall area, there would be no impacts to this water feature. During the November 19, 2014, survey portions of the existing roadway were notably eroded and it is likely that some routine maintenance of this access road will be required following high flow events. Any maintenance or reconstruction activities would be limited to the existing footprint of the road. All roadway maintenance activities within the wash will be conducted in conformance with the Avoidance and Minimization Measures specified by the California Department of Fish and Wildlife for the project and best management practices for work in jurisdictional wetlands and waters of the U.S.

The additional 0.29 acre of riverine wetlands is considered a jurisdictional feature under Section 1600 of the California Fish and Game Code. As described above, with the exception of the use and maintenance of an existing access road through the wash, the project-related activities in the proposed soil management area would avoid impacts to the bed bank and channel of this feature as well as any vegetation within and directly adjacent to the channel. Therefore, the use of the proposed soil management area would not result in any additional impacts to California Department of Fish and Wildlife jurisdictional streams or riparian habitat.

References

Baldwin, Bruce G., Douglas H. Goldman, David J. Keil, and Robert Patterson (eds.). 2012. *The Jepson Manual: Vascular Plants of California*. Berkeley: University of California Press.

Curtis, K. E., and R. W. Lichvar. 2010. *Updated Datasheet for the Identification of the Ordinary High Water Mark (OHWM) in the Arid West Region of the Western United States*. ERDC/CRREL TN-10-1. U.S. Army Corps of Engineers Research and Development Center, Cold regions Research and Engineering Laboratory.

Department of Toxic Substances Control (DTSC). 2011. *Topock Compressor Station Final Remedy. FEIR, Vol. 1* Mitigation Monitoring and Reporting Program, California Department of Toxic Substances Control.

Lichvar, R. W., and S.M. McColley. 2008. *A Field Guide to the Identification of the Ordinary High Water Mark (OHWM) in the Arid West Region of the Western United States*. ERDC/CRREL TR-08-12. U.S. Army Corps of Engineers Research and Development Center, Cold regions Research and Engineering Laboratory.

VICINITY MAP

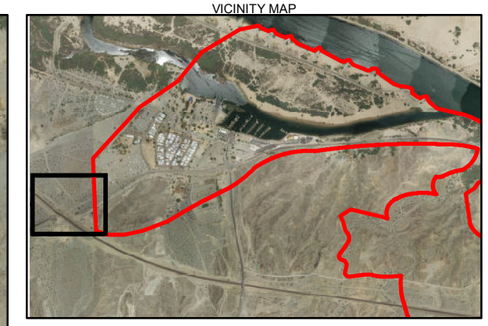

LEGEND

Additional Work Area Footprint

EIR Project Area

N

0 50 100 200

Feet

FIGURE 1
ADDITIONAL WORK AREAS OUTSIDE OF EIR PROJECT AREA
PG&E TOPOCK COMPRESSOR STATION, NEEDLES, CALIFORNIA

CH2MHILL.

UNK \\ZINFANDEL\PROJ\PACIFICGASELECTRICCO\TOPOCKPROGRAM\GIS\MAPFILES\2014\REVEG\FIG1_ADDL_WORK_AREA.MXD ECLARK1 1/29/2015 10:03:52 AM

Aerial from Google Earth Pro © 2014. Additional information added by CH2M HILL.

FIGURE 2
RECENT AERIAL PHOTOGRAPH (FEBRUARY 3, 2013) OF PROPOSED SOIL STAGING AND STORAGE AREA
PG&E TOPOCK COMPRESSOR STATION, NEEDLES, CALIFORNIA

CH2MHILL

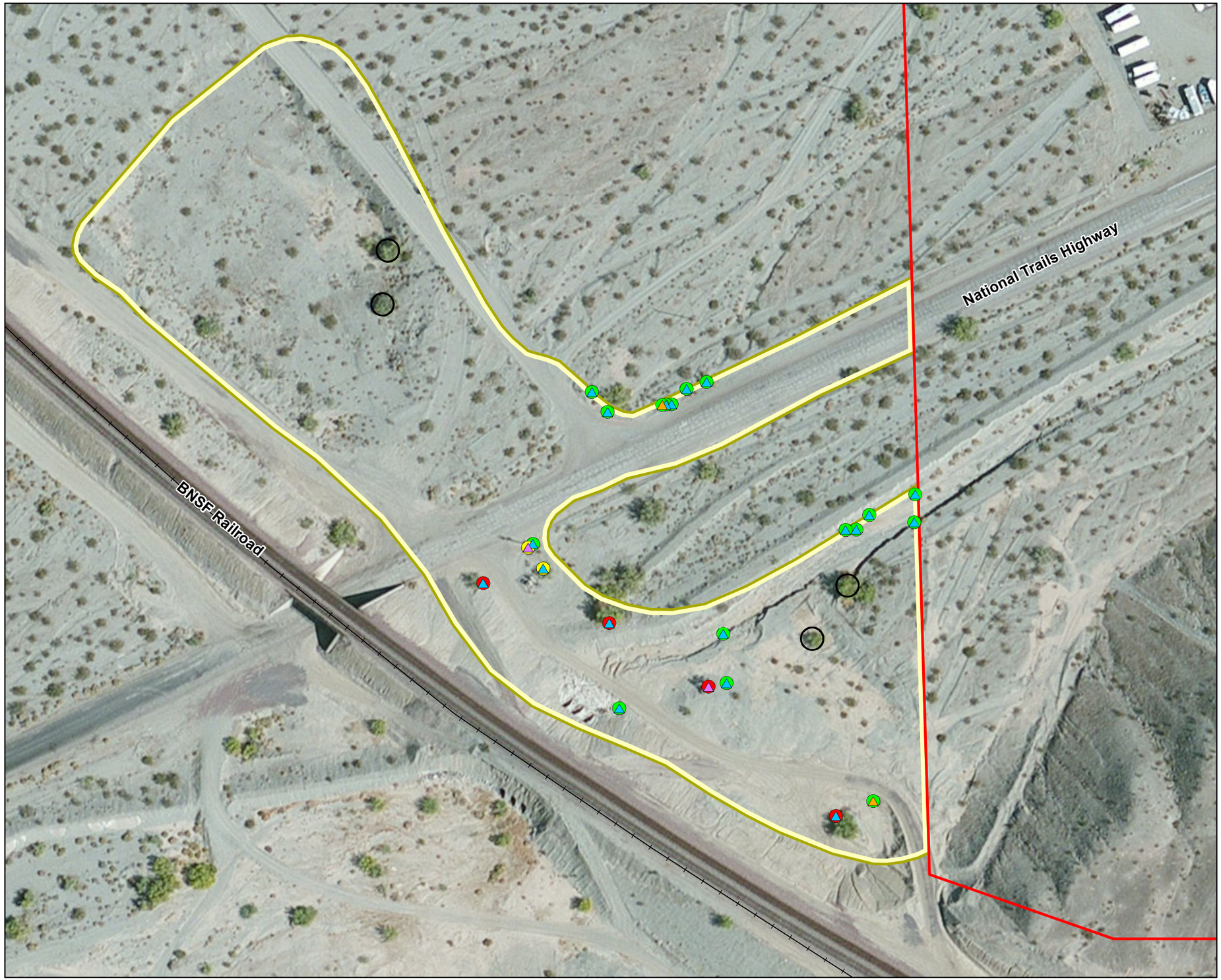

VICINITY MAP

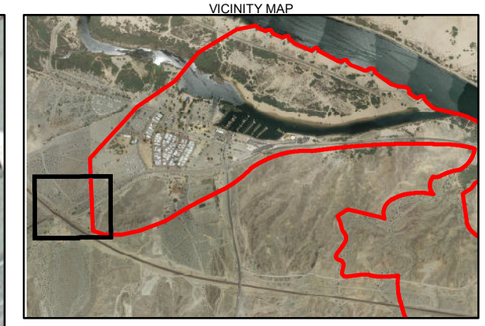

LEGEND

Plant No Longer Present

Plant Species

- Blue Palo Verde
- Catclaw Acacia
- Desert Smoke Tree

Height Designation

- Tall
- Medium
- Short
- Additional Work Area Footprint
- EIR Project Area

Service Layer Credits: Source: Esri, DigitalGlobe, GeoEye, i-cubed, Earthstar Geographics, CNES/Airbus DS, USDA, USGS, AEX, Getmapping, Aerogrid, IGN, IGP, swisstopo, and the GIS User Community

N

0 50 100 200
Feet

FIGURE 3
LOCATIONS OF MATURE PLANTS
PG&E TOPOCK COMPRESSOR STATION, NEEDLES, CALIFORNIA

CH2MHILL

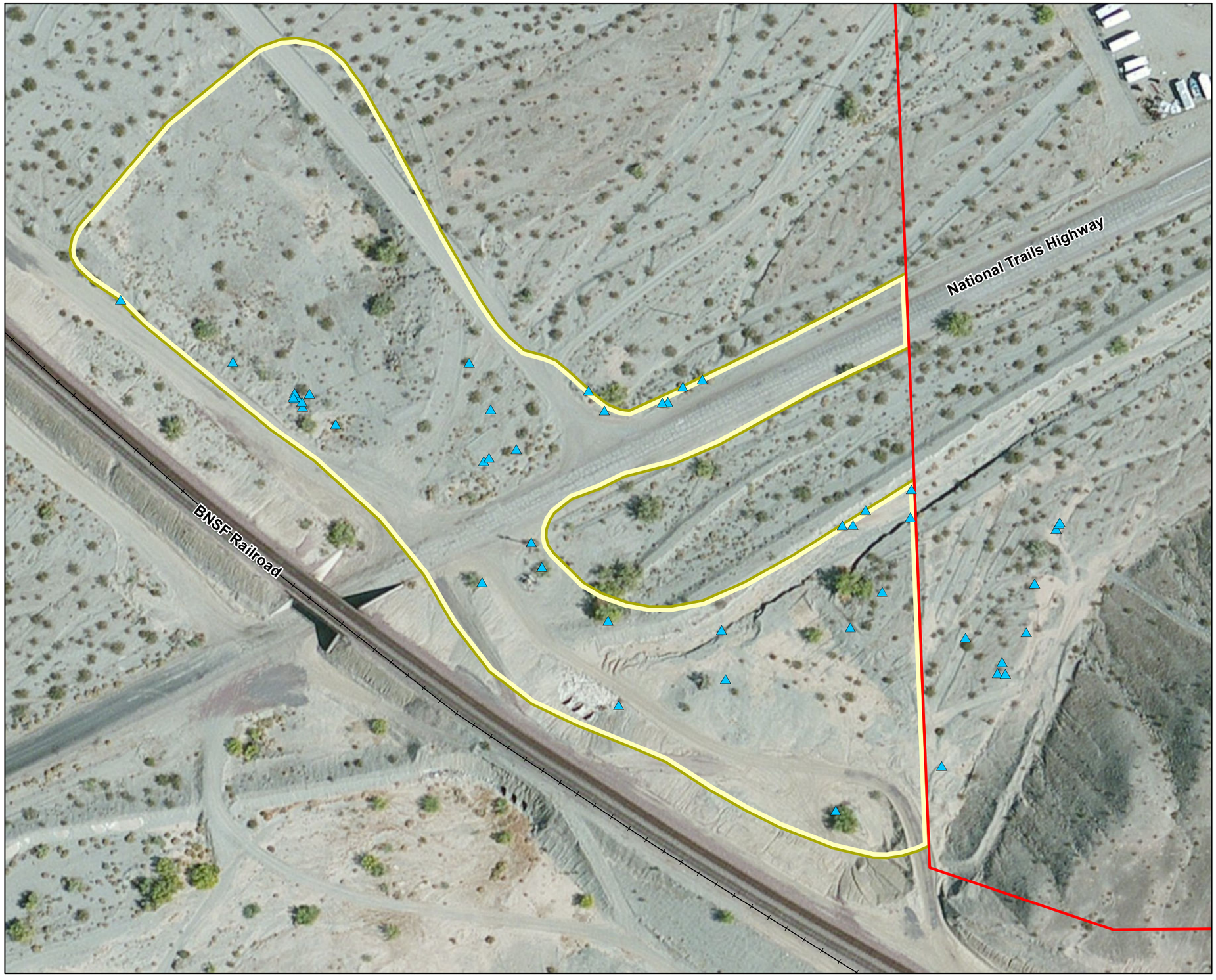

VICINITY MAP

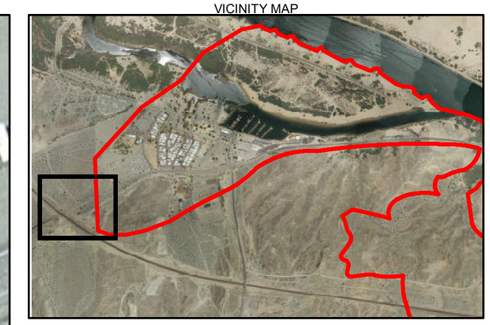

LEGEND

- Blue Palo Verde
- Additional Work Area Footprint
- EIR Project Area

Service Layer Credits: Source: Esri, DigitalGlobe, GeoEye, i-cubed, Earthstar Geographics, CNES/Airbus DS, USDA, USGS, AEX, Getmapping, Aerogrid, IGN, IGP, swisstopo, and the GIS User Community

N

0 50 100 200
Feet

FIGURE 4
LOCATIONS OF CULTURALLY SIGNIFICANT PLANTS
PG&E TOPOCK COMPRESSOR STATION, NEEDLES, CALIFORNIA

CH2MHILL.

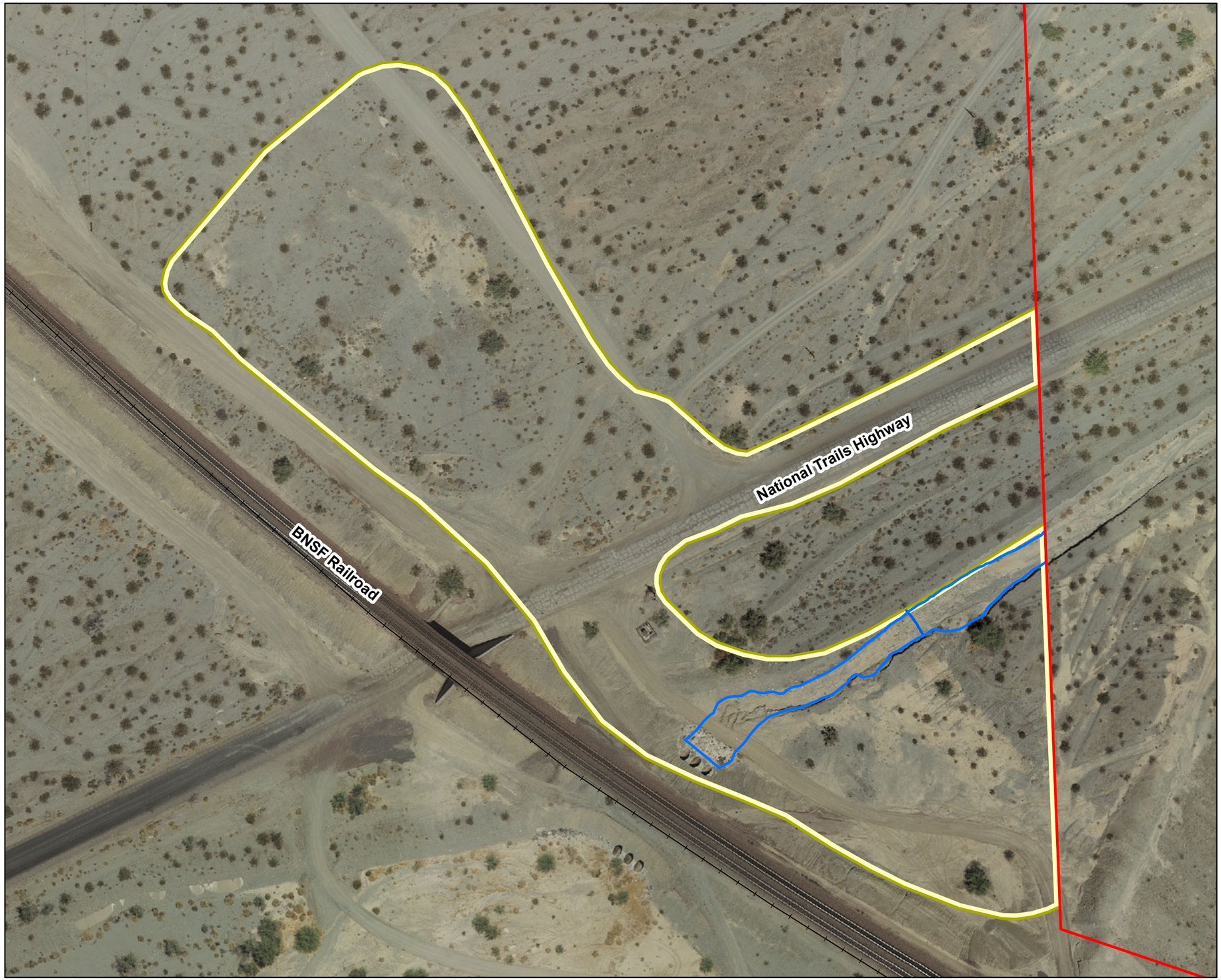

VICINITY MAP

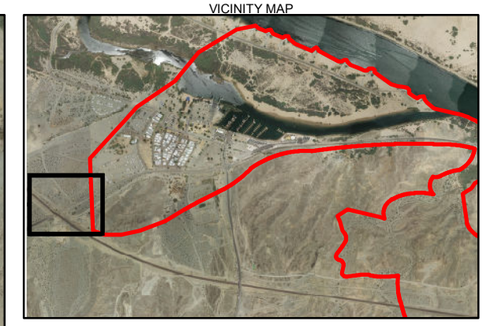

LEGEND

- Riverine Intermittent Stream Bed Cobble-Gravel Temporarily Flooded (0.29 acres)
- Transect A
- Additional Work Area Footprint
- EIR Project Area

N

0 50 100 200
Feet

FIGURE 5
EXTENSION OF WASH ALONG SOUTH SIDE OF ROAD
PG&E TOPOCK COMPRESSOR STATION, NEEDLES, CALIFORNIA

CH2MHILL

Attachment 1
Representative Site Photographs

Soil storage area south of the National Trails Highway as seen on March 14, 2013. This area had been cleared and graded for a paintball game.

Soil storage area south of the National Trails Highway as seen on November 19, 2013.

Soil storage area south of the National Trails Highway as seen on November 19, 2013.

Small blue palo verde seedling observed in soil storage area south of the National Trails Highway.

Wash along the north side of the soil storage area south of the National Trails Highway.

Culverts and existing road along the west side of the soil storage area south of the National Trails Highway

Soil storage area on the north side of the National Trails Highway

Soil storage area on the north side of the National Trails Highway – former borrow pit now used for off-road vehicle parking and staging area

Soil storage area on the north side of the National Trails Highway – former borrow pit now used for off-road vehicle parking and staging area

Small blue palo verde seedling near the entrance to the soil storage area on the north side of the National Trails Highway

Attachment 2
Transect A Data Sheet and Photographs

Arid West Ephemeral and Intermittent Streams OHWM Datasheet

Project: PG&E TOPOCK
Project Number:
Stream:
Investigator(s): R. HUDDLESTON

Date: 19 NOV. 2014 **Time:** 12:30
Town: NEEDLES, ~~CA~~ **State:** CA
Photo begin file#: 797 **Photo end file#:** 826

Y [X] / N [ ] Do normal circumstances exist on the site?

Y [ ] / N [X] Is the site significantly disturbed?

Location Details: TRANSECT A

Projection: **Datum:** NAD 83
Coordinates: 34.723907 -114.518661

Potential anthropogenic influences on the channel system: - APPEARS TO BE AN EXCAVATED CHANNEL - SOIL PILE/LEVEE ALONG THE NORTH SIDE - 3 LARGE (8 FT DIAMETER) CULVERTS TO THE WEST UNDER BNSF RR TRACKS

Brief site description: LINEAR CHANNEL WITH WELL DEFINED VERTICAL BANKS, SPARSELY VEGETATED. - SANDY SUBSTRATE WITH SCATTERED GRAVEL

Checklist of resources (if available):

- [X] Aerial photography
  Dates:
- [X] Topographic maps
- [ ] Geologic maps
- [ ] Vegetation maps
- [X] Soils maps
- [ ] Rainfall/precipitation maps
- [X] Existing delineation(s) for site
- [ ] Global positioning system (GPS)
- [ ] Other studies
- [ ] Stream gage data
  Gage number:
  Period of record:
  - [ ] History of recent effective discharges
  - [ ] Results of flood frequency analysis
  - [ ] Most recent shift-adjusted rating
  - [ ] Gage heights for 2-, 5-, 10-, and 25-year events and the most recent event exceeding a 5-year event

Hydrogeomorphic Floodplain Units

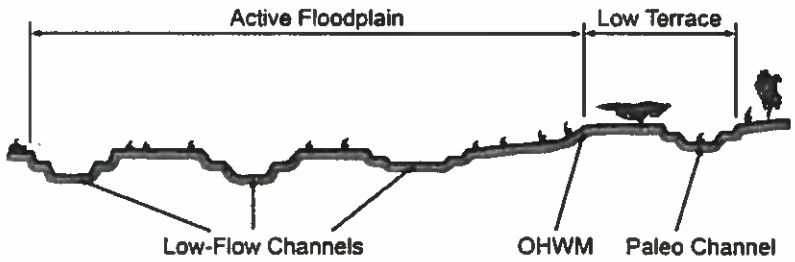

Procedure for identifying and characterizing the floodplain units to assist in identifying the OHWM:

1. Walk the channel and floodplain within the study area to get an impression of the geomorphology and vegetation present at the site.
2. Select a representative cross section across the channel. Draw the cross section and label the floodplain units.
3. Determine a point on the cross section that is characteristic of one of the hydrogeomorphic floodplain units.
   a) Record the floodplain unit and GPS position.
   b) Describe the sediment texture (using the Wentworth class size) and the vegetation characteristics of the floodplain unit.
   c) Identify any indicators present at the location.
4. Repeat for other points in different hydrogeomorphic floodplain units across the cross section.
5. Identify the OHWM and record the indicators. Record the OHWM position via:
   - [ ] Mapping on aerial photograph
   - [ ] Digitized on computer
   - [X] GPS
   - [ ] Other:

Wentworth Size Classes

Inches (in)		Millimeters (mm)	Wentworth size class	
	10.08	256	Boulder	Gravel
	2.56	64	Cobble	
	0.157	4	Pebble	
	0.079	2.00	Granule	
	0.039	1.00	Very coarse sand	Sand
	0.020	0.50	Coarse sand	
1/2	0.0098	0.25	Medium sand	
1/4	0.005	0.125	Fine sand	
1/8	0.0025	0.0625	Very fine sand	
1/16	0.0012	0.031	Coarse silt	Silt
1/32	0.00061	0.0156	Medium silt	
1/64	0.00031	0.0078	Fine silt	
1/128	0.00015	0.0039	Very fine silt	
			Clay	Mud

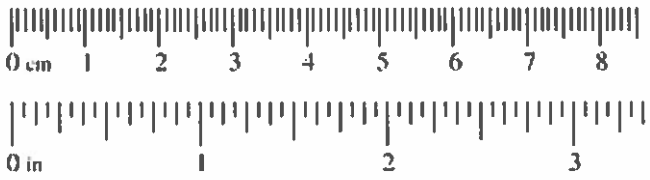

Project ID: TOPOCK **Cross section ID:** T-A **Date:** 19 NOV, 2014 **Time:** 12:30

Cross section drawing:

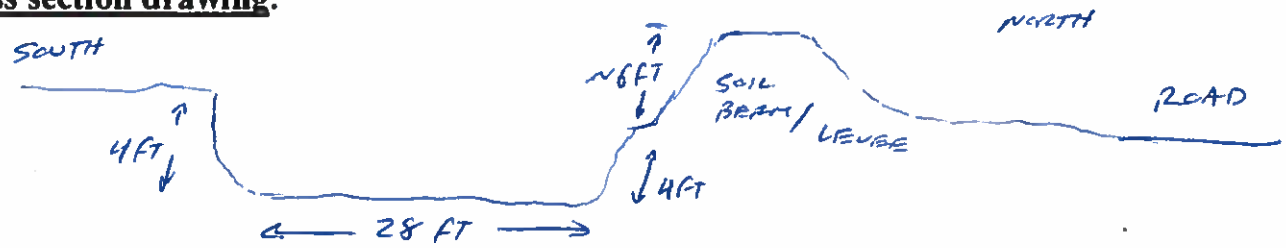

OHWM

GPS point: TRANSECT A

Indicators:

- [ ] Change in average sediment texture
- [ ] Change in vegetation species
- [x] Change in vegetation cover
- [x] Break in bank slope
- [ ] Other: _____
- [ ] Other: _____

Comments: ORDINARY HIGH WATER IS CONTAINED WITHIN DEFINED, STEEP VERTICAL BANKS ~4 FT TALL

Floodplain unit:

- [x] Low-Flow Channel
- [ ] Active Floodplain
- [ ] Low Terrace

GPS point: SAME AS TRANSECT A

Characteristics of the floodplain unit:

Average sediment texture: SAND W/ SOME GRAVEL

Total veg cover: _____% Tree: _____% Shrub: _____% Herb: _____%

Community successional stage:

- [ ] NA
- [x] Early (herbaceous & seedlings)
- [ ] Mid (herbaceous, shrubs, saplings)
- [ ] Late (herbaceous, shrubs, mature trees)

Indicators:

- [x] Mudcracks
- [ ] Ripples
- [x] Drift and/or debris
- [x] Presence of bed and bank
- [ ] Benches
- [ ] Soil development
- [ ] Surface relief
- [ ] Other: _____
- [ ] Other: _____
- [ ] Other: _____

Comments: FLOWS APPEAR TO BE CONFINED TO WHAT APPEARS TO BE AN EXCAVATED CHANNEL - STEEP SIDE SLOPES - UNIFORM BED - SAND W/ SOME GRAVEL RANGING IN SIZE FROM PEBBLES TO BOULDERS - SPARSE VEGETATION

Project ID: **Cross section ID:** **Date:** **Time:**

Floodplain unit: ☐ Low-Flow Channel ☐ Active Floodplain ☐ Low Terrace

GPS point: _____

Characteristics of the floodplain unit:

Average sediment texture: _____

Total veg cover: _____ % Tree: _____% Shrub: _____% Herb: _____%

Community successional stage:

- ☐ NA
- ☐ Early (herbaceous & seedlings)
- ☐ Mid (herbaceous, shrubs, saplings)
- ☐ Late (herbaceous, shrubs, mature trees)

Indicators:

- ☐ Mudcracks
- ☐ Ripples
- ☐ Drift and/or debris
- ☐ Presence of bed and bank
- ☐ Benches
- ☐ Soil development
- ☐ Surface relief
- ☐ Other: _____
- ☐ Other: _____
- ☐ Other: _____

Comments:

Floodplain unit: ☐ Low-Flow Channel ☐ Active Floodplain ☐ Low Terrace

GPS point: _____

Characteristics of the floodplain unit:

Average sediment texture: _____

Total veg cover: _____ % Tree: _____% Shrub: _____% Herb: _____%

Community successional stage:

- ☐ NA
- ☐ Early (herbaceous & seedlings)
- ☐ Mid (herbaceous, shrubs, saplings)
- ☐ Late (herbaceous, shrubs, mature trees)

Indicators:

- ☐ Mudcracks
- ☐ Ripples
- ☐ Drift and/or debris
- ☐ Presence of bed and bank
- ☐ Benches
- ☐ Soil development
- ☐ Surface relief
- ☐ Other: _____
- ☐ Other: _____
- ☐ Other: _____

Comments:

Attachment 3
Soil Staging and Clearance Extents (ARCADIS)

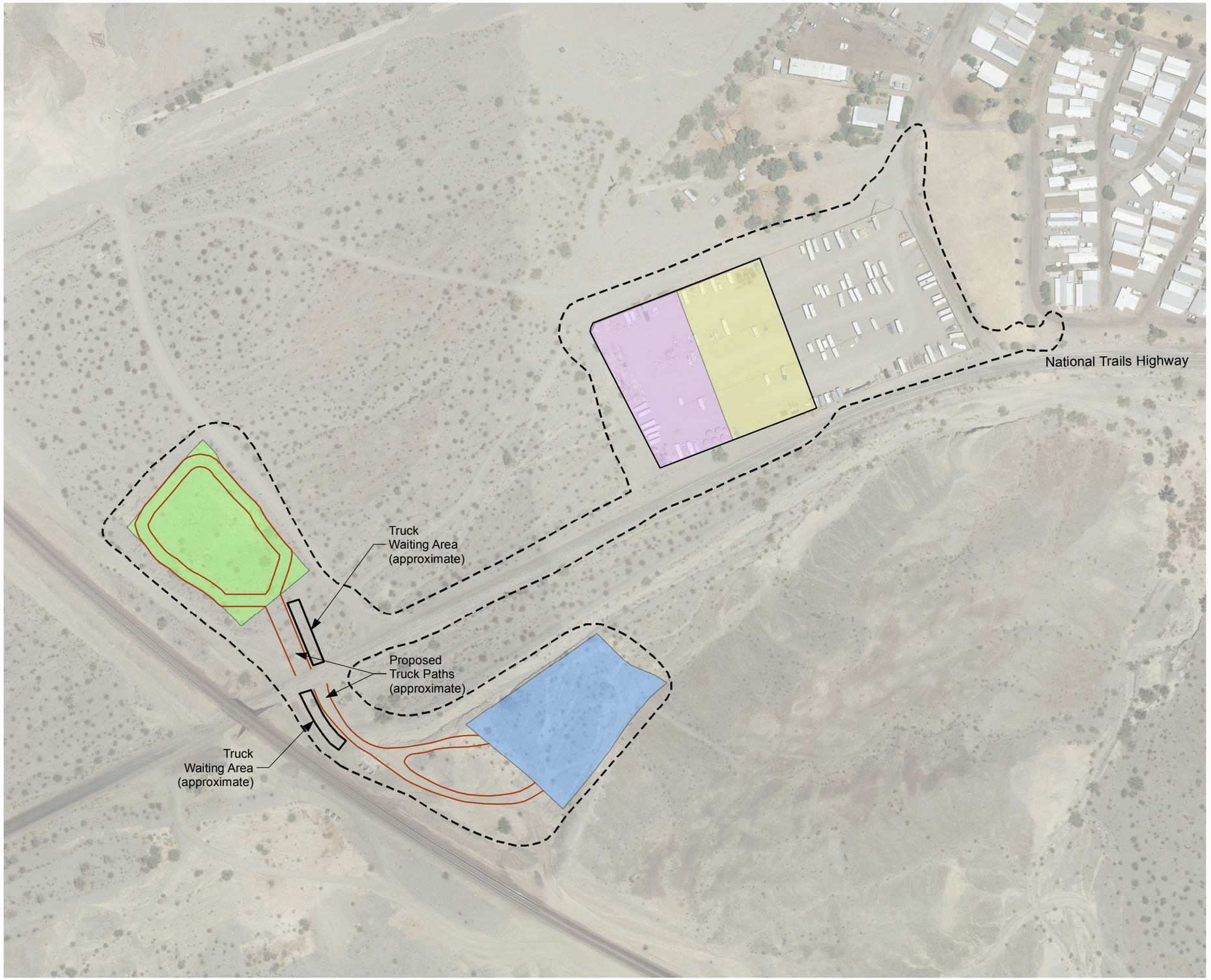

Legend

- Temporary Construction Laydown Area (~1.3 AC.)
- Long Term Remedy Support Area (~1.3 AC.)
- Soil Processing Area (~1.55 AC.)
- Soil Storage Area (~1.55 AC.)
- Extent of Area Potentially Requiring Cultural and Biological Clearance

N

0 200 400 600

1 " = 200 '

PACIFIC GAS AND ELECTRIC COMPANY
TOPOCK COMPRESSOR STATION
NEEDLES, CALIFORNIA
GROUNDWATER REMEDIATION PROJECT

CONSTRUCTION HEADQUARTERS, SOIL STAGING, AND STORAGE AREA CLEARANCE EXTENTS

ARCADIS

FIGURE
1

File Path: C:\Projects\ETIC\PGE-Topock\MXD\CHQ\CHQ_Park_Moabi_20141210.mxd - 12/10/2014

BOD Appendix A11
Archaeological and Historical Resource Survey of Areas Proposed for Project Features at Moabi Regional Park

ARCHAEOLOGICAL AND HISTORICAL RESOURCE SURVEY FOR AREAS CONSIDERED FOR PROJECT FEATURES AT MOABI REGIONAL PARK

MMRP CUL-1b/c-1 and 1-b/c-2 require Pacific Gas and Electric Company (PG&E) to "assesses the potential for the construction, operations, or decommissioning of specific proposed improvements to result in significant impacts on historically significant resources" (CUL-1b/c-2) and to "avoid, minimize, or mitigate impacts on historical and archaeological resources to the maximum extent feasible" (CUL-1b/c-1), while MMRP CUL-2 requires PG&E to "consider the location of Unique archaeological resources and avoid resources to the maximum extent feasible" during Project design and construction. The term "unique archaeological resources" is defined by Public Resources Code section 21083.2. In addition, the Programmatic Agreement (PA) and the Cultural and Historic Properties Management Plan (CHPMP) require that remediation activities be carried out "in ways that avoid, minimize, or mitigate adverse effects to cultural and historic properties within the APE, to the maximum extent practicable" (PA Stipulation I(B); CHPMP Section 1.5).

To comply with these requirements, PG&E retained Applied EarthWorks, Inc. (Æ) as its Qualified Cultural Resource Consultant to conduct archaeological and historical field surveys of the additional locations considered for Project features in Moabi Regional Park. On December 2, 2014 Æ archaeologists Patrick Moloney and Marc Linder conducted the required survey of the proposed construction headquarters and soil staging/processing (HQSS) areas to locate any previously unidentified archaeological and historical sites.

In compliance with recently revised Archaeological and Historical Field Logistics Protocols, a pre-field work kick-off meeting was conducted at the Topock Compressor Station meeting room on December 2, 2014 to discuss safety matters and the objectives and proposed methods of the HQSS survey, to distribute relevant maps and site records where requested, and to address questions or concerns expressed by the attendees. Present at the meeting were Patrick Moloney and Marc Linder (Æ); Howard Magill, Tribal Representative for the Colorado River Indian Tribes (CRIT); Susan Wilcox, Consultant Archaeologist for DTSC; Linda Otero, Tribal Representative for Fort Mojave Indian Tribe (FMIT); Dawn Hubbs, Tribal Representative/Archaeologist for the Hualapai Tribe; and Glenn Caruso, Remediation Resources Specialist and Curt Russell, Remediation Project Manager, of PG&E. Field work commenced immediately following the kick-off meeting and was completed on the same day.

For purposes of attaining sub-meter accuracy or better, Æ archaeologists utilized the latest Trimble Geo X7 GPS system specifically reserved for the Project's archaeological field work. The survey was divided into two separate areas, Area A and Area B. Each area was surveyed using 10-meter (m) pedestrian transects. Other attendees were invited to follow behind employing similar transects to ensure complete coverage.

RESULTS AND CONCLUSIONS

The 16.5-acre survey area was comprised of three discontiguous blocks of land connected by a transportation corridor. The eastern perimeter of the survey area is 390 meters west of the intersection of Park Moabi Road and National Trails Highway. For ease of

manageability in the field the 16.5-acre survey area was sub-divided into three parcels: HQSSS-A, HQSSS-B, and HQSSS-C (see Figure 1). All three areas were surveyed by Æ archaeologists Patrick Moloney and Marc Linder walking transects spaced at 10-m intervals. Other attendees were invited to follow behind employing similar transects to ensure complete coverage.

HQSSS-A is an 8.1-acre rectangular tract of land, 5.2 acres of which is a fenced-in Park Moabi RV and boat dry storage facility; the other 2.9 acres is comprised of a moderately disturbed wash surrounding the enclosed storage yard. The enclosed portion of HQSSS-A consists entirely of mechanically graded and denuded native soils. With approximately one quarter of the 150 storage spaces occupied, visual inspection was partially restricted. The perimeter segment of HQSSS-A consists of moderately to highly disturbed native soils within a broad east-west trending wash composed of Chemehuevi gravels, pink Tertiary silts, and Bouse formation sediments. Scrub vegetation is dominated by creosote bush, mesquite, palo verde and smoke trees. Ground surface visibility was approximately 85 percent.

No archaeological resources were noted within the fenced area. However, an 8-m (E/W) x 5-m (N/S) surface deposit of Colorado River cobbles, some of which appear fire-affected, and bleached *Dreissenidae* shells along the western perimeter was identified as a possible cultural resource site by some survey participants. Closer inspection by Æ archaeologists determined these were not archaeological artifacts but naturally and mechanically modified cobbles deposited after construction of the fence and later mechanically pushed into a pile against the fence. The storage area itself has been extensively graded with no other outcrops of cobbles either within it or in the surrounding wash environment, suggesting the cobbles had been imported. The various fragmentations and impacts are inconsistent with tool stone production. Though some of the cobbles exhibit signs of fire exposure, there is no evidence that they were burned at this location or that the exposure was cultural in nature. Finally, the bleached *Dreissenidae* shells scattered upon the cobbles appear to be Quagga mussels (*Dreissena rostriformis bugensis)*, an invasive species introduced into the U.S. in 1989. The fact that HQSSS-A is used as a boat storage facility suggests the shells were washed off the hulls of boats before the vessels were transported through California. (Vegetable check point 3 miles down the road on I-40.) All these factors indicate that this is not an archeological site.

A discrete scatter of historic cans and bottle glass dating from 1920 through 1980 was noted on the southwestern perimeter of the survey area outside the fenced enclosure. These materials are within the “toss zone” of a segment of CA-SBR-2910H (National Old Trails Highway/Route 66) that extends west from the intersection of Park Moabi Road and National Trails Highway. The paved road segment is currently maintained by San Bernardino County, and is likely part of the 1947-1966 alignment of Route 66.

HQSSS-B is a 4.5-acre parcel of land composed of a 250 x 20 m linear tract that follows the alignment of CA-SBR-2910H described above. It also includes a 3.8-acre tract of highly disturbed and mechanically graded land owned and managed by BLM. The area appears to have been excavated to approximately 5 feet below the native surface, with the excavated materials having been transported off-site. In the southeast corner a stock pile and

rudimentary loading dock has been constructed, most probably for the loading and removal of the graded material. The area does not show up as graded in aerial maps prior to 2010, indicating, along with the absence of vegetation other than pioneer cheese bush and white bursage plants, that the disturbance to the area is recent. The area offers 100 percent visibility with full exposure. The surface soils consist of pinkish Tertiary silts with outcrops of Bouse formation deposits along the western and northern perimeters. Three diagonal series of lines inscribed upon the surface demarcate what appear to be approximately 60 parking spaces for medium to large sized vehicles, presumably recreational vehicles with trailers. A kiosk and notice board at the southern extreme of the area advertises OHV trailer parking. No archaeological or historical resources were noted during the current field work.

HQSSS-C is a 4.1-acre rectangular tract of mostly highly disturbed and graded land situated within a broad, east-west trending, flood-prone wash owned and managed by BLM. The area does not show up as graded in aerial maps prior to 2010. Visibility is 100 percent, with full exposure. A few creosote bushes remain. The surface soils consist of pinkish Tertiary silts mixed with Bouse formation deposits along the undisturbed perimeter areas. A previously unrecorded concrete post road marker with a “C” etched into one surface, indicating its association with Route 66, was noted on the northeast perimeter of HQSSS-C. This historic highway feature may be associated with an earlier (pre-1947) alignment of CA-SBR-2910H (National Old Trails Highway/Route 66). This concrete post road marker can be easily avoided. No other archaeological or historical resources were noted during the current field work.

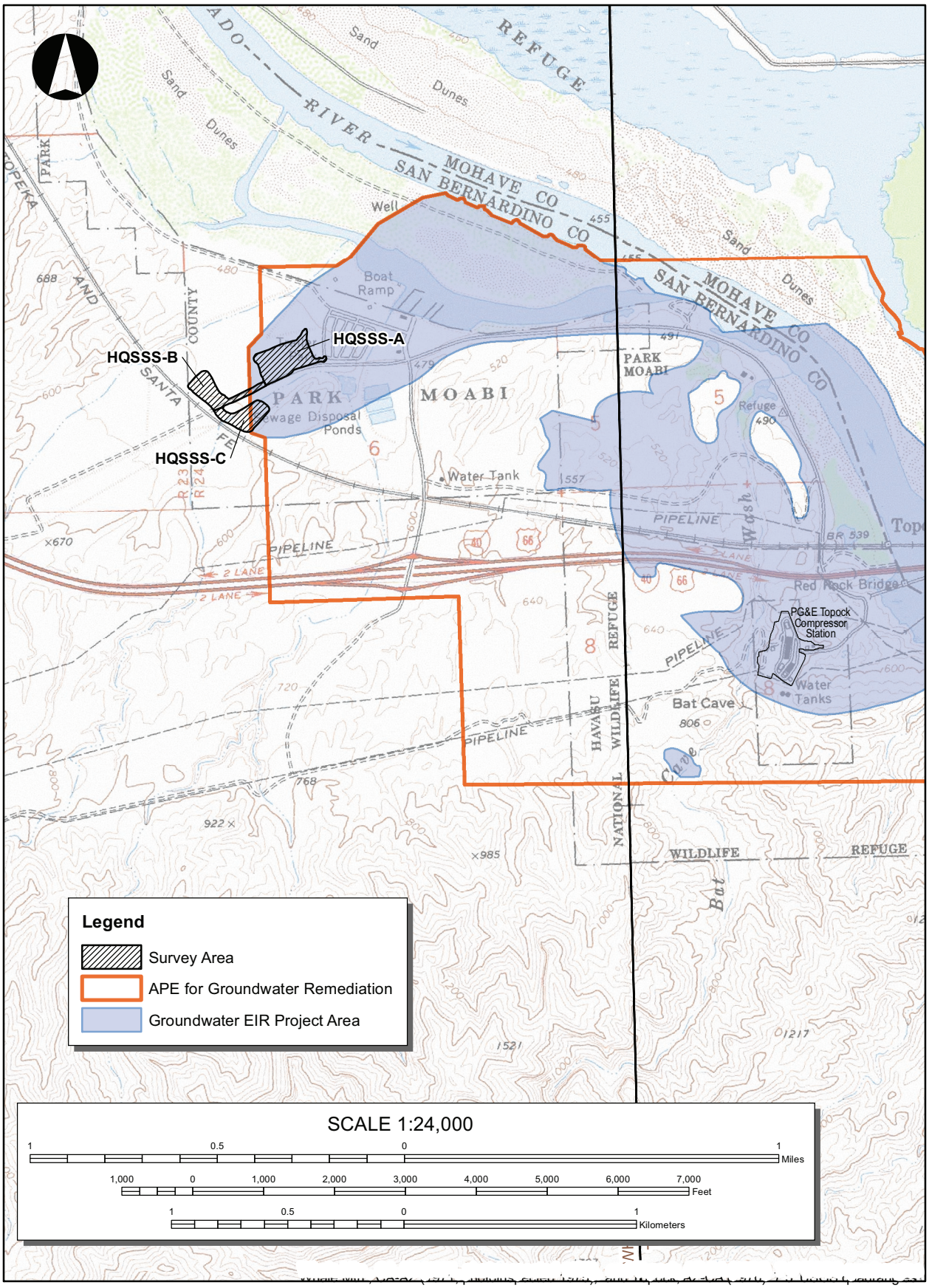

Figure 1 Area surveyed for the Construction headquarters soils staging and storage area.

BOD Appendix C
Calculations (*on CD-ROM only*)

- TCS Ponds Improvements - Building load, TEG load/performance
- Moabi Regional Park Facilities – Portable water booster pump, Workshop building structural, Covered parking area structural, Decon pad/Utility pad structural, Construction headquarters electrical
- Bat Cave Wash Crossing – Hydraulics

STRUCTURAL ENGINEERING

109 EAST ESCALONES
SAN CLEMENTE, CA 92672
PHONE #: (949) 388-9333
FAX#: (949) 388-3773

JOB INFORMATION:

TOPOCK POND POWER BUILDING
PG&E TOPOCK COMPRESSOR STATION, PARK MOABI
NEEDLES, CA 92363

ENGINEERING FIRM'S JOB #:

14-1195

APPROVED BY:

ENGINEER:	DUSTIN K. ROSEPINK
LICENSED STATE:	CA
LICENSE NUMBER:	C 72487

REGISTERED PROFESSIONAL ENGINEER
DUSTIN K. ROSEPINK
C 72487
EXP. 06-30-16
CIVIL
STATE OF CALIFORNIA

12-11-14

THIS PAGE IS INTENTIONALLY LEFT BLANK

STRUCTURAL ENGINEERING

109 EAST ESCALONES
SAN CLEMENTE, CA 92672
PHONE #: (949) 388-9333
FAX#: (949) 388-3773

VICINITY MAP:

PG&E TOPOCK COMPRESSOR STATION, PARK MOABI, NEEDLES, CA 92363

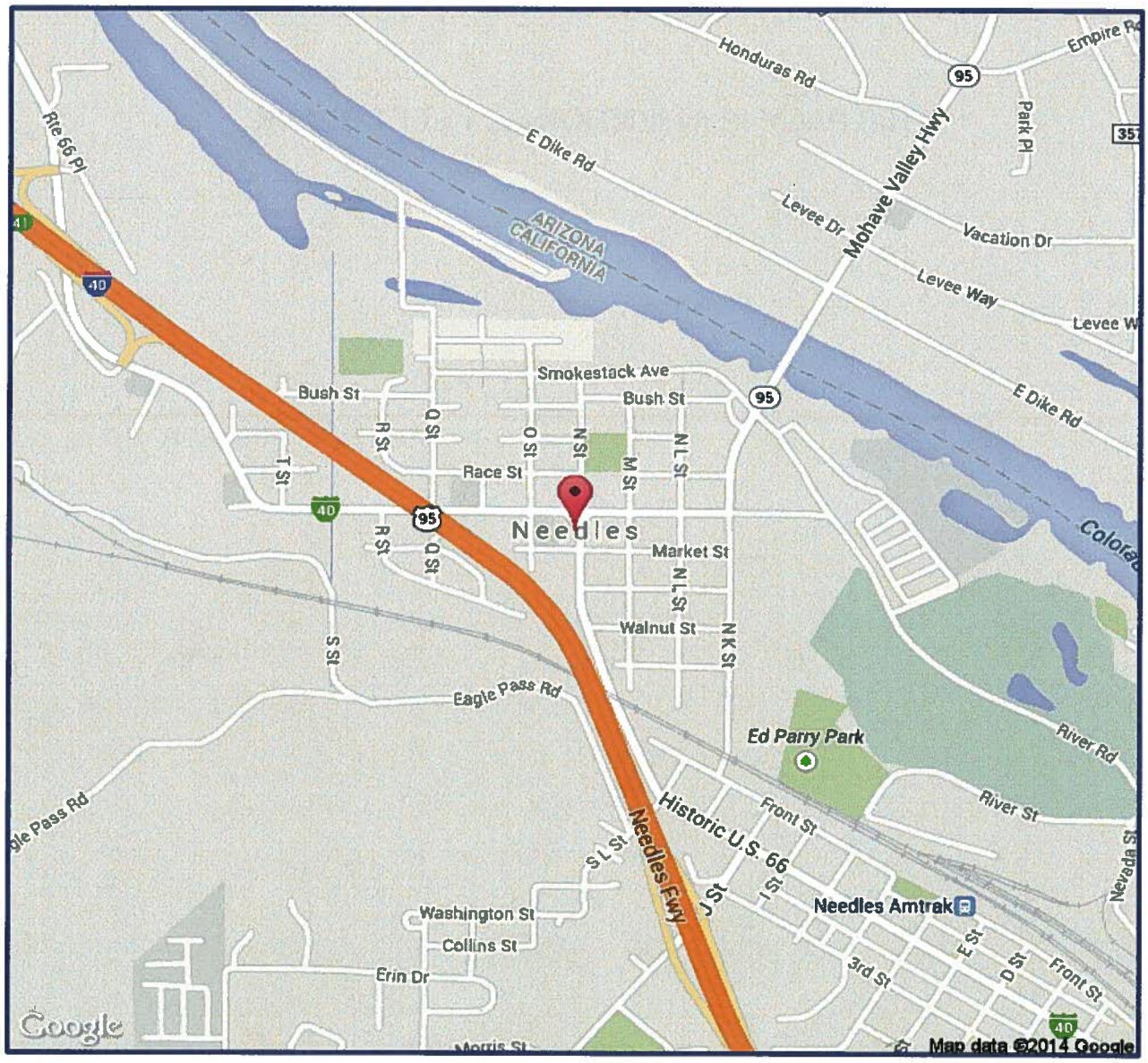

THIS PAGE IS INTENTIONALLY LEFT BLANK

STEL ENGINEERING

STRUCTURAL ENGINEERING

109 EAST ESCALONES
SAN CLEMENTE, CA 92672
PHONE #: (949) 388-9333
FAX#: (949) 388-3773

CODE

2013 CBC

LOADS:

ROOF LIVE LOAD:	20 psf
GROUND SNOW LOAD:	0 psf
ROOFING DEAD LOAD:	1.06 psf
TOTAL ROOF DEAD LOADS:	3.00 psf
TOTAL DEAD LOADS:	3.67 psf

SOIL ALLOWABLE BEARING:

VERTICAL BEARING:	1,500 psf
LATERAL BEARING:	200 psf

CONCRETE:

STRENGTH f'_c:	2,500 psi
REINFORCING STEEL:	ASTM A 615 GR. 40 (#4 & SMALLER) ASTM A 615 GR. 60 (#5 & LARGER)

STEEL:

COLD FORMED:	ASTM A653 GR. 55
HSS:	ASTM A1085
PLATES:	ASTM A36 OR A572 GR. 50
BOLTS:	ASTM A307 OR A325

THIS PAGE IS INTENTIONALLY LEFT BLANK

Search Results

Latitude: 34.7145
Longitude: -114.4930

ASCE 7-10 Wind Speeds (3-sec peak gust MPH*):

Risk Category I: 100
Risk Category II: 110
Risk Category III-IV: 115
MRI 10 Year:** 72
MRI 25 Year:** 79
MRI 50 Year:** 85
MRI 100 Year:** 91

ASCE 7-05: 85
ASCE 7-93: 73

*MPH(Miles per hour)
**MRI Mean Recurrence Interval (years)

Users should consult with local building officials to determine if there are community-specific wind speed requirements that govern.

Download a PDF of your results

Print your results

WIND SPEED WEB SITE DISCLAIMER:

While the information presented on this web site is believed to be correct, ATC assumes no responsibility or liability for its accuracy. The material presented in the wind speed report should not be used or relied upon for any specific application without competent examination and verification of its accuracy, suitability and applicability by engineers or other licensed professionals. ATC does not intend that the use of this information replace the sound judgment of such competent professionals, having experience and knowledge in the field of practice, nor to substitute for the standard of care required of such professionals in interpreting and applying the results of the wind speed report provided by this web site. Users of the information from this web site assume all liability arising from such use. Use of the output of this web site does not imply approval by the governing building code bodies responsible for building code approval and interpretation for the building site(s) described by latitude/longitude location in the wind speed report.

4 S.T.E.L.
ENGINEERING, INC.

109 EAST ESCALONES
SAN CLEMENTE, CA 92672
PHONE (949) 388-9333
FAX (949) 388-3773

SEISMIC INFORMATION

OCCUPANCY =	II		S_S =	0.241	g
I =	1.0		S_1 =	0.125	g
SITE CLASS =	D		F_a =	1.0	
R =	2.00		F_V =	1.5	
Ω_O =	2.50		T_L =	8.0	sec
C_d =	2.00				
S_{MS} =	F_a*S_s		S_{M1} =	F_V*S_1	
S_{MS} =	0.241		S_{M1} =	0.1875	
S_{DS} =	$(2/3)*S_{MS}$		S_{D1} =	$(2/3)*S_{M1}$	
S_{DS} =	0.161		S_{D1} =	0.125	

Seismic Design Category = B

T_a = $C_t*h_n^x$
Mean roof height (h_n) = 14
T_a = 0.145

C_t = 0.02
x = 0.75

C_s = $S_{DS}/(R/I)$
C_s = 0.080

C_s = $S_{D1}/(T*(R/I))$
C_s = 0.432 MAX **OK**

C_s = 0.01 MIN **OK**

4 S.T.E.L.
ENGINEERING, INC.

109 EAST ESCALONES
SAN CLEMENTE, CA 92672
PHONE (949) 388-9333
FAX (949) 388-3773

PROJECT INFORMATION

JOB INFORMATION

Job Name: TOPOCK POND POWER BUILDING
Description: 17'-0" WIDE 2-POST STR. x 25'-4" O.C.
Job Number: 14-1195

GENERAL BUILDING DATA

Roof Slope/Angle (A) =	9.46	degrees	
W =	17.00	ft	(sloped)
Required Clear Height (CLRH) =	7.67	ft	
Column Spacing =	25.33	ft O.C.	
Allowed Grade Changes =	2.0	ft	
Max Column Height (CH) =	11.39	ft	
Height at base of column =	0.00	ft	
z =	12.73	ft	mean roof height
Risk =	II		

Site Address: **PG&E TOPOCK COMPRESSOR STATION, PARK MOABI, NEEDLES, CA 92363**

Latitude =	34.848	Degrees	(From Google Maps)
Longitude =	-114.614	Degrees	(From Google Maps)
S_S =	0.241	g	(From USGS)
S_1 =	0.125	g	(From USGS)
Risk Category I:	100	mph	(From ATC)
Risk Category II:	110	mph	(From ATC)
Risk Category III:	115	mph	(From ATC)

DEAD LOADS

Deck	1.06	psf
Misc.	0.00	psf
Purlins	1.71	psf
Beams	0.23	psf
Columns	0.67	psf
Total	**3.67**	**psf**

ROOF LIVE LOAD

L_r =	20.0	psf	
P =	0.0	lb	Point load live load (Not applied concurrently with L_r)

4 S.T.E.L.
ENGINEERING, INC.

109 EAST ESCALONES
SAN CLEMENTE, CA 92672
PHONE (949) 388-9333
FAX (949) 388-3773

TOPOCK POND POWER BUILDING
17'-0" WIDE 2-POST STR. x 25'-4" O.C.

JOB #: 14-1195
11/26/2014

PROJECT INFORMATION

SNOW LOAD

Ground Snow (p_g) =	0.0	psf	p_f =	0.0	psf
C_e =	0.9		Do not include snow in seismic weight		
C_t =	1.2		$p_{s,E}$ =	0.0	psf
I =	1.0				
C_s =	1.0				
p_s =	$0.7*C_e*C_t*I*p_g*C_s$				
p_s =	0.0	psf			

WIND LOAD

	110 MPH		
V =	110	mph	CASE 2
Exposure =	C		
G =	0.85		
K_z =	0.85		
K_{zt} =	1.0	Note: This needs to be verified for site-specific use	
K_d =	0.85		

SEISMIC INFO

Site Class =	D		C_t =	0.02	
R =	1.25		x =	0.75	
Ω_O =	1.25		T_L =	8.0	
C_d =	1.25		ρ =	1.00	
I =	1.00		Seis. Design Category =	C	
S_S =	0.241	g	S_1 =	0.125	g
F_a =	1.6		F_V =	2.30	
S_{MS} =	F_a*S_s		S_{M1} =	F_V*S_1	
S_{MS} =	0.39	g	S_{M1} =	0.29	g
S_{DS} =	$(2/3)*S_{MS}$		S_{D1} =	$(2/3)*S_{M1}$	
S_{DS} =	0.257	g	S_{D1} =	0.192	g

4 S.T.E.L.
ENGINEERING, INC.

109 EAST ESCALONES
SAN CLEMENTE, CA 92672
PHONE (949) 388-9333
FAX (949) 388-3773

DECK WIND LOADS (COMPONENTS & CLADDING)

W =	17.00	ft	ANGLE (A) =	9.46	DEGREES

EFFECTIVE WIND AREA (EWA) = L*MAX(TW,L/3)

EWA =	96.33	ft^2	a =	3.00	ft

WIND LOADS 110 MPH

V =	110	mph	Risk =	II
Exposure =	C			

DUE TO GABLE ROOF - C&C

p = qh*(GCp - GCpi)

q_h = $.00256*K_z*K_{zt}*K_d*V^2*I$

K_z =	0.850
K_{zt} =	1.0
K_d =	0.85
q_h =	22.38
G =	0.85

FOR STRONG DIRECTION LOADING

GC_{p+} =	0.31	GC_{pi+} =	0.18
GC_{p-} =	-2.55	GC_{pi-} =	-0.18

Roof

p_{DN} =	6.72	psf	p_{UP} =	-56.86	psf

4 S.T.E.L.
ENGINEERING, INC.

109 EAST ESCALONES
SAN CLEMENTE, CA 92672
PHONE (949) 388-9333
FAX (949) 388-3773

TOPOCK POND POWER BUILDING
17'-0" WIDE 2-POST STR. x 25'-4" O.C.

JOB #: 14-1195
11/26/2014

Gable - Roof		*Fig. 30.4-2	Governing	
A =	9.5		*GCp+*	0.31
EWA =	96		*GCp-*	-2.02
**Assuming Zone 3				
A ≤ 7				
EWA≤10	GCp+	0.3		
	GCp-	-2.8	*GCp+*	0.2
EWA≥100	GCp+	0.2	*GCp-*	-1.2
	GCp-	-1.1		
7 < A ≤ 27				
EWA≤10	GCp+	0.5		
	GCp-	-2.6	*GCp+*	0.31
EWA≥100	GCp+	0.3	*GCp-*	-2
	GCp-	-2		
27 < A ≤ 45				
EWA≤10	GCp+	0.9		
	GCp-	-1.2	*GCp+*	0.8
EWA≥100	GCp+	0.8	*GCp-*	-1
	GCp-	-1		

Gable - Overhang		*Fig. 30.4-2	Governing	
A =	9.5		*GCp-* =	-2.55
EWA =	96			
**Assuming Zone 3				
A ≤ 7				
EWA≤10	GCp- =	-2.8	*GCp-* =	-0.9
EWA≥100	GCp- =	-0.8		
7 < A ≤ 27				
EWA≤10	GCp- =	-3.7	*GCp-* =	-2.5
EWA≥100	GCp- =	-2.5		
27 < A ≤ 45				
EWA≤10	GCp- =	-2	*GCp-* =	-1.8
EWA≥100	GCp- =	-1.8		

Roof & OH	
Governing	
GCp+	0.31
GCp-	-2.5

4 S.T.E.L.
ENGINEERING, INC.

109 EAST ESCALONES
SAN CLEMENTE, CA 92672
PHONE (949) 388-9333
FAX (949) 388-3773

DECK ANALYSIS

Member Slope =	0.00	degrees	W =	17.00	ft

DECK INFO **E26 - VULCRAFT**

I + =	0.040	in^4	I - =	0.042	in^4
Weight =	1.06	plf	E =	29,000,000	psi
Width (TW) =	1.00	ft width of deck for section properties			

DECK SPAN INFO

a =	2.00	ft	Cantilever	
b =	6.50	ft	Simple Span	(Mutli-span)
c =	2.00	ft	Cantilever	

DEAD LOADS

Deck	1.06	psf
Misc.	0.00	psf
Total	**1.06**	**psf**

LIVE LOADS

Point Live Load (P) = 0.00 lb (Spread over 2.5 ft width)

Live Load Reduction

Live Load (LL) =	20.00	psf			
A_T =	17.00	ft^2	R_1 =	1.00	trib area
LL (Reduced) =	20.00	psf	R_2 =	1.00	slope

SNOW LOAD

Snow Load (SL) =	0.00	psf	$p_{S,E}$ =	0.0	psf

WIND LOADS - STRONG DIRECTION

WIND DIRECTION PARALLEL TO ROOF SLOPE DIRECTION

p_{UP} =	6.72	psf
w_{UP} =	$p_{NW\text{-}UP}$*TW	
w_{UP} =	6.72	plf
p_{DOWN} =	-56.86	psf
w_{DOWN} =	$p_{NW\text{-}DOWN}$*TW	
w_{DOWN} =	-56.86	plf

4 S.T.E.L.
ENGINEERING, INC.

109 EAST ESCALONES
SAN CLEMENTE, CA 92672
PHONE (949) 388-9333
FAX (949) 388-3773

DECK ANALYSIS

LOAD CASES

D			L_r		
			P =	0.00	lb
w =	1.06	plf	w =	20.00	plf
R_A =	5.57	lb	R_A =	105.00	lb
R_B =	5.57	lb	R_B =	105.00	lb
V_a =	2.12	lb	V_a =	40.00	lb
V_b =	3.45	lb	V_b =	65.00	lb
V_c =	2.12	lb	V_c =	40.00	lb
M^- =	5.60	ft-lb	M^- =	105.63	ft-lb
M^+ =	3.15	ft-lb	M^+ =	59.41	ft-lb
M_{cant} =	2.12	ft-lb	M_{cant} =	40.00	ft-lb
Δ_a =	0.00	in	Δ_a =	0.06	in
Δ_b =	0.02	in	Δ_b =	0.69	in
Δ_c =	0.00	in	Δ_c =	0.06	in

S		
w =	0.00	plf
R_A =	0.00	lb
R_B =	0.00	lb
V_a =	0.00	lb
V_b =	0.00	lb
V_c =	0.00	lb
M^- =	0.00	ft-lb
M^+ =	0.00	ft-lb
M_{cant} =	0.00	ft-lb
Δ_a =	0.00	in
Δ_b =	0.00	in
Δ_c =	0.00	in

4 S.T.E.L.
ENGINEERING, INC.

109 EAST ESCALONES
SAN CLEMENTE, CA 92672
PHONE (949) 388-9333
FAX (949) 388-3773

TOPOCK POND POWER BUILDING
17'-0" WIDE 2-POST STR. x 25'-4" O.C.

JOB #: 14-1195
11/26/2014

DECK ANALYSIS

LOAD CASES

W_{DOWN}			W_{UP}		
w =	-56.86	plf	w =	6.72	plf
R_A =	-298.54	lb	R_A =	35.26	lb
R_B =	-298.54	lb	R_B =	35.26	lb
V_a =	-113.73	lb	V_a =	13.43	lb
V_b =	-184.81	lb	V_b =	21.83	lb
V_c =	-113.73	lb	V_c =	13.43	lb
M^- =	-300.32	ft-lb	M^- =	35.47	ft-lb
M^+ =	-168.93	ft-lb	M^+ =	19.95	ft-lb
M_{cant} =	-113.73	ft-lb	M_{cant} =	13.43	ft-lb
Δ_a =	-0.11	in	Δ_a =	0.01	in
Δ_b =	-0.82	in	Δ_b =	0.10	in
Δ_c =	-0.11	in	Δ_c =	0.01	in

4 S.T.E.L. ENGINEERING, INC.

109 EAST ESCALONES
SAN CLEMENTE, CA 92672
PHONE (949) 388-9333
FAX (949) 388-3773

DECK DESIGN

DECK PROPERTIES — VULCRAFT

E26 - VULCRAFT

			Gauge =	26	
F_y =	60	ksi	t =	0.02	in
F_u =		ksi	h =	1	in
Wt. =	1.060	psf	A =	0.3115	in^2
I + =	0.0400	in^4	I - =	0.0420	in^4
S + =	0.0670	in^3	S - =	0.0710	in^3
E =	29,000,000	psi	k_v =	5.34	

Width (TW) = 12.00 in (section width used for determining section properties)

FLEXURE

Ω_b = 1.67 (ASD)

Φ_b = 0.90 (LRFD)

Positive Moment			Negative Moment		
M_y^+ =	$S_{xe}^+ * F_y$		M_y^- =	$S_{xe}^- * F_y$	
M_y^+ =	335.0	ft-lb	M_y^- =	355.0	ft-lb
M_n^+/Ω_b =	**200.6**	**ft-lb**	**M_n^-/Ω_b =**	**212.6**	**ft-lb**
$\Phi_b * M_n^+$ =	**301.50**	**ft-lb**	**$\Phi_b * M_n^-$ =**	**319.50**	**ft-lb**

AISI S100 **SHEAR**

Ω_v = 1.60 $\sqrt{(E*k_v/F_y)}$ = 50.80

Φ_v = 0.95

h/t = 55.87

C3.2.1-2,3,4b

F_v = 0.60*SQRT(E*kv*Fy)/(h/t)

F_v = 32,737.8 psi

C3.2.1-1

V_n = $A_w * F_v$

V_n = 10,198.16 lb

V_n/Ω_v = 6,373.85 lb

$\Phi_v * V_n$ = 10,734.91 lb

DECK PROPERTIES

E26 - VULCRAFT

4 S.T.E.L.
ENGINEERING, INC.

109 EAST ESCALONES
SAN CLEMENTE, CA 92672
PHONE (949) 388-9333
FAX (949) 388-3773

TOPOCK POND POWER BUILDING
17'-0" WIDE 2-POST STR. x 25'-4" O.C.

JOB #: 14-1195
11/26/2014

DECK LOAD COMBINATIONS (ASD)

MEMBER CAPACITIES

E26 - VULCRAFT

CHECK:	**OK**
Max Shear Stress:	2%
Max Bending Stress:	87%

V_n/Ω_v =	6,373.8	lb	
M_n^+/Ω_b =	200.60	ft-lb	Positive Bending
M_n^-/Ω_b =	212.57	ft-lb	Negative Bending

CHECK DEFLECTIONS

D

$\Delta_{ALLOW,SIMPLE}$ =	0.65	in	
$\Delta_{ALLOW,CANT}$ =	0.20	in	
Δ_{SIMPLE} =	0.02	in	**OK**
Δ_{CANT} =	0.00	in	**OK**

L_r OR S OR W

$\Delta_{ALLOW,SIMPLE}$ =	1.30	in	
$\Delta_{ALLOW,CANT}$ =	0.80	in	
Δ_{SIMPLE} =	0.69	in	**OK**
Δ_{CANT} =	0.06	in	**OK**

4 S.T.E.L.
ENGINEERING, INC.

109 EAST ESCALONES
SAN CLEMENTE, CA 92672
PHONE (949) 388-9333
FAX (949) 388-3773

DECK LOAD COMBINATIONS (ASD)

LOAD CASES

D			L_r		
V_a =	2.12	lb	V_a =	40.00	lb
V_b =	3.45	lb	V_b =	65.00	lb
V_c =	2.12	lb	V_c =	40.00	lb
M_a =	5.60	ft-lb	M_a =	105.63	ft-lb
M_b =	3.15	ft-lb	M_b =	59.41	ft-lb
M_c =	2.12	ft-lb	M_c =	40.00	ft-lb

S			W_{UP}		
V_a =	0.00	lb	V_a =	13.43	lb
V_b =	0.00	lb	V_b =	21.83	lb
V_c =	0.00	lb	V_c =	13.43	lb
M_a =	0.00	ft-lb	M_a =	35.47	ft-lb
M_b =	0.00	ft-lb	M_b =	19.95	ft-lb
M_c =	0.00	ft-lb	M_c =	13.43	ft-lb

W_{DOWN}		
V_a =	-113.73	lb
V_b =	-184.81	lb
V_c =	-113.73	lb
M_a =	-300.32	ft-lb
M_b =	-168.93	ft-lb
M_c =	-113.73	ft-lb

4 S.T.E.L.
ENGINEERING, INC.

109 EAST ESCALONES
SAN CLEMENTE, CA 92672
PHONE (949) 388-9333
FAX (949) 388-3773

TOPOCK POND POWER BUILDING
17'-0" WIDE 2-POST STR. x 25'-4" O.C.

JOB #: 14-1195
11/26/2014

DECK LOAD COMBINATIONS (ASD)

LOAD COMBOS

D				% Stressed
V_a =	2.12	lb	OK	0%
V_b =	3.45	lb	OK	0%
V_c =	2.12	lb	OK	0%
M^- =	5.60	ft-lb	OK	3%
M^+ =	3.15	ft-lb	OK	2%
M_{cant} =	2.12	ft-lb	OK	1%
D + L_r				
V_a =	42.12	lb	OK	1%
V_b =	68.45	lb	OK	1%
V_c =	42.12	lb	OK	1%
M^- =	111.22	ft-lb	OK	52%
M^+ =	62.56	ft-lb	OK	31%
M_{cant} =	42.12	ft-lb	OK	20%
D + S				
V_a =	2.12	lb	OK	0%
V_b =	3.45	lb	OK	0%
V_c =	2.12	lb	OK	0%
M^- =	5.60	ft-lb	OK	3%
M^+ =	3.15	ft-lb	OK	2%
M_{cant} =	2.12	ft-lb	OK	1%
D + $0.6W_{DOWN}$				
V_a =	-66.12	lb	OK	1%
V_b =	-107.44	lb	OK	2%
V_c =	-66.12	lb	OK	1%
M^- =	-174.59	ft-lb	OK	87%
M^+ =	-98.21	ft-lb	OK	46%
M_{cant} =	-66.12	ft-lb	OK	33%

4 S.T.E.L.
ENGINEERING, INC.

109 EAST ESCALONES
SAN CLEMENTE, CA 92672
PHONE (949) 388-9333
FAX (949) 388-3773

TOPOCK POND POWER BUILDING
17'-0" WIDE 2-POST STR. x 25'-4" O.C.

JOB #: 14-1195
11/26/2014

DECK LOAD COMBINATIONS (ASD)

$D + 0.75(0.6)W_{DOWN} + 0.75L_r$				% Stressed
V_a =	-19.06	lb	OK	0%
V_b =	-30.97	lb	OK	0%
V_c =	-19.06	lb	OK	0%
M^- =	-50.33	ft-lb	OK	25%
M^+ =	-28.31	ft-lb	OK	13%
M_{cant} =	-19.06	ft-lb	OK	10%
$D + 0.75(0.6)W_{DOWN} + 0.75S$				
V_a =	-49.06	lb	OK	1%
V_b =	-79.72	lb	OK	1%
V_c =	-49.06	lb	OK	1%
M^- =	-129.54	ft-lb	OK	65%
M^+ =	-72.87	ft-lb	OK	34%
M_{cant} =	-49.06	ft-lb	OK	24%
$0.6D + 0.6W_{UP}$				
V_a =	9.33	lb	OK	0%
V_b =	15.16	lb	OK	0%
V_c =	9.33	lb	OK	0%
M^- =	24.64	ft-lb	OK	12%
M^+ =	13.86	ft-lb	OK	7%
M_{cant} =	9.33	ft-lb	OK	4%

4 S.T.E.L.
ENGINEERING, INC.

109 EAST ESCALONES
SAN CLEMENTE, CA 92672
PHONE (949) 388-9333
FAX (949) 388-3773

Deck Used:

E26 - VULCRAFT

Width =	12.00	in	
s =	15.00	in	Screw Spacing
T_{screw} =	37.91	lb	(ASD)

TEK Select Screws

Screw Size =	#1/4-14		
$V_{ALLOWABLE}$ =	**1,467.00**	**lb**	Per Screw

E4.3.1 Connection Shear Limited by Tilting and Bearing (Light Gauge Only)

Ω =	3.00		
t_1 =	0.018	in	member thickness in contact with screw head (Deck)
t_2 =	0.105	in	member thickness not in contact with screw head (Purlin)
d =	0.25	in	nominal screw diameter
F_{u1} =	70	ksi	Deck
F_{u2} =	70	ksi	Purlin

For $t_2/t_1 \leq 1.0$

(E4.3.1-1)	P_{ns} =	$4.2*(t_2^3*d)^{1/2}*F_{u2}$	
	P_{ns} =	5,001.51	lb
(E4.3.1-2)	P_{ns} =	$2.7*t_1*d*F_{u1}$	
	P_{ns} =	845.78	lb
(E4.3.1-3)	P_{ns} =	$2.7*t_2*d*F_{u2}$	
	P_{ns} =	4,961.25	lb
	P_{ns} =	**845.78**	**lb**

For $t_2/t_1 \geq 2.5$

(E4.3.1-4)	P_{ns} =	$2.7*t_1*d*F_{u1}$	
	P_{ns} =	845.78	lb
(E4.3.1-5)	P_{ns} =	$2.7*t_2*d*F_{u2}$	
	P_{ns} =	4,961.25	lb
	P_{ns} =	**845.78**	**lb**

t_2/t_1 =	5.866	
P_{ns} =	845.78	lb
P_{ns}/Ω =	**281.93**	**lb**

4 S.T.E.L.
ENGINEERING, INC.

109 EAST ESCALONES
SAN CLEMENTE, CA 92672
PHONE (949) 388-9333
FAX (949) 388-3773

C&C MEMBERS AT 3'-9" o/c LOADING

W =	17.00	ft	ANGLE (A) =	9.46	DEGREES
TW =	3.75	ft	L =	25.33	ft

EFFECTIVE WIND AREA (EWA) = L*MAX(TW,L/3)

EWA =	213.93	ft^2	a =	3.00	ft

WIND LOADS 110 MPH

V =	110	mph	Risk =	II
Exposure =	C			

DUE TO SLOPED ROOF - C&C

$p = q_h*G*C_N$

$q_h = .00256*K_z*K_{zt}*K_d*V^2$

K_z =	0.850
K_{zt} =	1.0
K_d =	0.85
q_h =	22.38
G =	0.85

FOR STRONG DIRECTION LOADING

$C_{N\text{-}DOWN}$ =	1.65		$C_{N\text{-}UP}$ =	-1.80	
p_{DOWN} =	31.43	psf	p_{UP} =	-34.33	psf

FOR WEAK DIRECTION LOADING (PARAPET)

GC_{p+} =	0.30	GC_{pi+} =	0.00
GC_{p-} =	-2.50	GC_{pi-} =	0.00

p_{DN} =	$q_h*(GC_p - GC_{pi})$		p_{UP} =	$q_h*(GC_p - GC_{pi})$	
p_{DN} =	6.71	psf	p_{UP} =	-55.95	psf

4 S.T.E.L.
ENGINEERING, INC.

109 EAST ESCALONES
SAN CLEMENTE, CA 92672
PHONE (949) 388-9333
FAX (949) 388-3773

C&C MEMBERS AT 3'-9" o/c LOADING

SEISMIC LOADS - WEAK DIRECTION ONLY

F_p = $((.4*a_p*S_{DS}*W_p)/(R_p/I_p))*(1+(2*(z/h)))$

a_p =	1.00	
S_{DS} =	0.26	
I_p =	1.00	
R_p =	1.50	
z =	11.39	ft
h =	11.39	ft

F_p/W_p = $((.4*a_p*S_{DS})/(R_p/I_p))*(1+(2*z/h))$

F_p/W_p = 0.21

$F_{p\text{-}MAX}/W_p$ = $1.6*S_{DS}*I_p$

$F_{p\text{-}MAX}/W_p$ = 0.41

$F_{p\text{-}MIN}/W_p$ = $0.3*S_{DS}*I_p$

$F_{p\text{-}MIN}/W_p$ = 0.08

4 S.T.E.L.
ENGINEERING, INC.

109 EAST ESCALONES
SAN CLEMENTE, CA 92672
PHONE (949) 388-9333
FAX (949) 388-3773

TOPOCK POND POWER BUILDING
17'-0" WIDE 2-POST STR. x 25'-4" O.C.

JOB #: 14-1195
11/26/2014

Gable - Roof		*Fig. 30.4-2	Governing	
A =	9.5		*GCp+*	0.3
EWA =	214		*GCp-*	-2.00
**Assuming Zone 3				
A ≤ 7				
EWA≤10	GCp+	0.3		
	GCp-	-2.8	*GCp+*	0.2
EWA≥100	GCp+	0.2	*GCp-*	-1.1
	GCp-	-1.1		
7 < A ≤ 27				
EWA≤10	GCp+	0.5		
	GCp-	-2.6	*GCp+*	0.3
EWA≥100	GCp+	0.3	*GCp-*	-2
	GCp-	-2		
27 < A ≤ 45				
EWA≤10	GCp+	0.9		
	GCp-	-1.2	*GCp+*	0.8
EWA≥100	GCp+	0.8	*GCp-*	-1
	GCp-	-1		

Gable - Overhang		*Fig. 30.4-2	Governing	
A =	9.5		*GCp-* =	-2.50
EWA =	214			
**Assuming Zone 3				
A ≤ 7				
EWA≤10	GCp- =	-2.8	*GCp-* =	-0.8
EWA≥100	GCp- =	-0.8		
7 < A ≤ 27				
EWA≤10	GCp- =	-3.7	*GCp-* =	-2.5
EWA≥100	GCp- =	-2.5		
27 < A ≤ 45				
EWA≤10	GCp- =	-2	*GCp-* =	-1.8
EWA≥100	GCp- =	-1.8		

Roof & OH	
Governing	
GCp+	0.3
GCp-	-2.5

4 S.T.E.L.
ENGINEERING, INC.

109 EAST ESCALONES
SAN CLEMENTE, CA 92672
PHONE (949) 388-9333
FAX (949) 388-3773

TOPOCK POND POWER BUILDING
17'-0" WIDE 2-POST STR. x 25'-4" O.C.

JOB #: 14-1195
11/26/2014

PURLIN ANALYSIS

Member Slope =	0.00	degrees	Trib. Width (TW) =	3.75	ft
W =	17.00	ft	n =	5	purlins along width

PURLIN INFO

AEP - C 10 x 3.5 12 GA

I_x =	28.568	in^4	I_y =	2.949	in^4
Weight =	6.43	plf	E =	29,500,000	psi

PURLIN SPAN INFO

L =	25.33	ft	simple span
a =	2.00	ft	max cantilever span

w = distributed load

V_{SIMPLE} =	w*L/2	max shear for simple span
V_{CANT} =	w*a	max shear for cantilever span
M_{SIMPLE} =	$w*L^2/8$	max moment for simple span alone
M_{CANT} =	$w*a^2/2$	max moment for cantilever span
Δ_{SIMPLE} =	$5*w*L^4/(384*E*I)$	
Δ_{CANT} =	$w*a^4/(8*E*I)$	

DEAD LOADS

Deck	1.06	psf
Misc.	0.00	psf
Purlins	1.71	psf
Total	**2.77**	**psf**

LIVE LOADS

Point Live Load (P) = 0.00 lb

Live Load Reduction

Live Load (LL) =	20.00	psf			
A_T =	95.00	ft^2	R_1 =	1.00	trib area
LL (Reduced) =	20.00	psf	R_2 =	1.00	slope

4 S.T.E.L.
ENGINEERING, INC.

109 EAST ESCALONES
SAN CLEMENTE, CA 92672
PHONE (949) 388-9333
FAX (949) 388-3773

PURLIN ANALYSIS

SNOW LOAD

Snow Load (SL) =	0.00	psf	$p_{S,E}$ =	0.0	psf

WIND LOADS - STRONG DIRECTION

WIND DIRECTION PARALLEL TO ROOF SLOPE DIRECTION

p_{UP} =	-55.95	psf
w_{UP} =	$p_{NW\text{-}UP}$*TW	
w_{UP} =	-209.81	plf
p_{DOWN} =	6.71	psf
w_{DOWN} =	$p_{NW\text{-}DOWN}$*TW	
w_{DOWN} =	25.18	plf

WIND LOADS - WEAK DIRECTION

p_W =	6.71	psf	Trib. Height (TH) =	1.00	ft
w_W =	p_P*TH				
w_W =	6.71	plf			

SEISMIC LOAD - WEAK DIRECTION

F_p/W_p =	0.21	
$w_p = (DL+p_{S,E})*F_p/W_p$ =	0.57	psf

4 S.T.E.L.
ENGINEERING, INC.

109 EAST ESCALONES
SAN CLEMENTE, CA 92672
PHONE (949) 388-9333
FAX (949) 388-3773

TOPOCK POND POWER BUILDING
17'-0" WIDE 2-POST STR. x 25'-4" O.C.

JOB #: 14-1195
11/26/2014

PURLIN ANALYSIS

LOAD CASES

D

w =	10.40	plf
V_{SIMPLE} =	131.75	lb
V_{CANT} =	20.80	lb
M_{SIMPLE} =	834.39	ft-lb
M_{CANT} =	20.80	ft-lb
Δ_{SIMPLE} =	0.11	in
Δ_{CANT} =	0.00	in

L_r

w =	75.00	plf
P =	0.00	lb
V_{SIMPLE} =	950.00	lb
V_{CANT} =	150.00	lb
M_{SIMPLE} =	6,016.67	ft-lb
M_{CANT} =	150.00	ft-lb
Δ_{SIMPLE} =	0.82	in
Δ_{CANT} =	0.00	in

S

w =	0.00	plf
V_{SIMPLE} =	0.00	lb
V_{CANT} =	0.00	lb
M_{SIMPLE} =	0.00	ft-lb
M_{CANT} =	0.00	ft-lb
Δ_{SIMPLE} =	0.00	in
Δ_{CANT} =	0.00	in

W_{UP}

w =	-209.81	plf
V_{SIMPLE} =	-2,657.64	lb
V_{CANT} =	-419.63	lb
M_{SIMPLE} =	-16,831.75	ft-lb
M_{CANT} =	-419.63	ft-lb
Δ_{SIMPLE} =	-1.62	in
Δ_{CANT} =	0.00	in

W_{DOWN}

w =	25.18	plf
V_{SIMPLE} =	318.92	lb
V_{CANT} =	50.36	lb
M_{SIMPLE} =	2,019.81	ft-lb
M_{CANT} =	50.36	ft-lb
Δ_{SIMPLE} =	0.19	in
Δ_{CANT} =	0.00	in

W (Weak Direction)

w =	6.71	plf
V_{SIMPLE} =	85.04	lb
V_{CANT} =	13.43	lb
M_{SIMPLE} =	538.62	ft-lb
M_{CANT} =	13.43	ft-lb
Δ_{SIMPLE} =	0.50	in
Δ_{CANT} =	0.00	in

E (Weak Direction)

w =	2.14	plf
V_{SIMPLE} =	27.11	lb
V_{CANT} =	4.28	lb
M_{SIMPLE} =	171.67	ft-lb
M_{CANT} =	4.28	ft-lb
Δ_{SIMPLE} =	0.16	in
Δ_{CANT} =	0.00	in

4 S.T.E.L. ENGINEERING, INC.

109 EAST ESCALONES
SAN CLEMENTE, CA 92672
PHONE (949) 388-9333
FAX (949) 388-3773

PURLIN DESIGN - AEP - C 10 x 3.5 12 GA

AEP - C 10 x 3.5 12 GA

Lateral Support

Continuous Top Flange Support:	**YES**
Continuous Bottom Flange Support:	**NO**
Simple Span Bracing:	MIDSPAN
Cantilever Span Bracing:	ENDS ONLY

Section Properties

S_{xe} =	5.10	in^3	S_y =	1.17	in^3
I_x =	28.57	in^4	I_y =	2.95	in^4
F_y =	55.0	ksi	E =	29,500,000	psi
D (LIP) =	0.916	in	I_{yc} =	1.47	in^4
Weight =	6.43	plf	Θ =	89.9	Degrees
h_o =	10.00	in	b_o =	3.50	in
r_x =	3.89	in	r_y =	1.25	in
t =	0.105	in	k_v =	5.34	
x_o =	-2.430	in	μ =	0.3	
C_w =	60.72	in^6	J =	0.00695	in^4
$x_{o,FLANGE}$ =	1.39	in	$y_o = h_y$ =	0.10	in
A (full) =	1.890	in^2	S_f =	5.71	in^3
G =	11,346,154	psi	r_o =	4.75	in
I_{xf} =	0.02	in^4	A_e =	1.1556	in^2
I_{xyf} =	0.06	in^4	j =	5.57	in
I_{yf} =	0.61	in^4	ξ_{web} =	2	
h_x =	-2.11	in	C_{wf} =	0.00	in^6
A_f =	0.46	in^2	J_f =	0.002	in^4
$L_u^+{}_{,SIMPLE}$ =	15.0	in	$L_u^-{}_{,CANTL}$ =	24.0	in
$C_b^+{}_{,SIMPLE}$ =	1.00		$C_b^-{}_{,CANTL}$ =	1.00	
$L_u^-{}_{,SIMPLE}$ =	152.0	in	$L_u^+{}_{,CANTL}$ =	15.0	in
$C_b^-{}_{,SIMPLE}$ =	1.30		$C_b^+{}_{,CANTL}$ =	1.00	
K_{SIMPLE} =	1.00		K_{CANTL} =	2.00	

PURLIN DESIGN - AEP - C 10 x 3.5 12 GA

AEP - C 10 x 3.5 12 GA Fy = 55 ksi; WITH LATERAL BRACE POINTS AT MIDSPAN OF SIMPLE SPAN AND ENDS ONLY OF CANTILEVERED SPAN

4 S.T.E.L.
ENGINEERING, INC.

109 EAST ESCALONES
SAN CLEMENTE, CA 92672
PHONE (949) 388-9333
FAX (949) 388-3773

PURLIN DESIGN - AEP - C 10 x 3.5 12 GA

AISI S100-

SHEAR

	Ω_v =	1.60		$\sqrt{(E*k_v/F_y)}$ =	53.52
	Φ_v =	0.95			
	STRONG DIRECTION			**WEAK DIRECTION**	
	h/t =	95.24		b/t =	33.33
C3.2.1-2,3,4b					
	F_v =	0.904*E*kv/(h/t)^2		F_v =	0.60*Fy
	F_v =	15,700.4	psi	F_v =	33,000.0 psi
C3.2.1-1					
	V_n =	A_w*F_v		V_n =	A_w*F_v
	V_n =	16,485.40	lb	V_n =	24,255.00 lb
	V_n/Ω_v =	**10,303.38**	**lb**	**V_n/Ω_v =**	**15,159.38 lb**
	Φ_v*V_n =	**15,661.13**	**lb**	**Φ_v*V_n =**	**23,042.25 lb**

FLEXURE - SIMPLE SPAN

	Ω_b =	1.67		M_1/M_2 =	0.0
	Φ_b =	0.90			
C3.1.2.1-9	σ_t =	$(G*J+(\pi^2*E*C_w/(K_t*L_t)^2))/(A*r_o^2)$			
	σ_t =	1,842,896	psi		
C3.1.2.1-11	σ_{ex} =	$\pi^2E/(K_x*L_x/r_x)^2$		σ_{ey} =	$\pi^2E/(K_y*L_y/r_y)^2$
C3.1.2.1-8	σ_{ex} =	19,558,013	psi	σ_{ey} =	2,021,898 psi
	STRONG DIRECTION			**WEAK DIRECTION**	
		NOMINAL SECTION STRENGTH			
C3.1.1-1	M_y =	$S_{xe}*F_y$		M_y =	$S_{ye}*F_y$
	M_y =	23,364.0	ft-lb	M_y =	5,368.0 ft-lb
		LATERAL-TORSIONAL BUCKLING STRENGTH			
C3.1.2.1-12	C_s =	-1.00		C_{TF} =	0.60
C3.1.2.1-4	F_e =	$C_b*r_o*A*\sqrt{(\sigma_{ey}*\sigma_t)}/S_f$		F_e =	$(C_s*A*\sigma_{ex}/(C_{TF}*S_f))*(j+C_s*\sqrt{(j^2+r_o^2*(\sigma_t/\sigma_{ex}))}$
C3.1.2.1-14	F_e =	$C_b*\pi^2*E*d*I_{yc}/(S_f*(K_y*L_y)^2)$			
C3.1.2.1-10	F_e =	3,339,910.80	psi	F_e =	9,875,267 psi
C3.1.2.1-2	F_c =	Fy		F_c =	Fy
	F_c =	55,000.0	psi	F_c =	55,000.0 psi
C3.1.2.1-1	M_n =	S_c*F_c		M_n =	S_c*F_c
	M_n =	23,364.0	ft-lb	M_n =	5,368.0 ft-lb

4 S.T.E.L.
ENGINEERING, INC.

109 EAST ESCALONES
SAN CLEMENTE, CA 92672
PHONE (949) 388-9333
FAX (949) 388-3773

PURLIN DESIGN - AEP - C 10 x 3.5 12 GA

FLEXURE - SIMPLE SPAN

STRONG DIRECTION

DISTORTIONAL BUCKLING STRENGTH

C3.1.4-12	L_{cr} =	28.2	in
	L_m =	15.0	in
	L =	MIN(L_m,L_{cr})	
	L =	15.00	in
C3.1.4-11	ß =	$1.0 \le 1+.4*(L/L_m)^{0.7}*(1-M_1/M_2)^{0.7} \le 1.3$	
	ß =	1.3	
C3.1.4-13	$k_{\Phi fe}$ =	12,612.63	lb
C3.1.4-14	$k_{\Phi we}$ =	1,397.65	lb
	k_{Φ} =	1,700.00	lb
C3.1.4-15	$k_{\Phi fg}$ =	0.12	in^2
C3.1.4-16	$k_{\Phi wg}$ =	0.0120	in^2
C3.1.4-6	F_d =	$ß*(k_{\Phi fe} + k_{\Phi we} + k_{\Phi})/(k_{\Phi fg} + k_{\Phi wg})$	
	F_d =	154,860.42	psi
C3.1.4-3	λ_d =	$\sqrt{(M_y/M_{crd})}$	
	λ_d =	0.60	
C3.1.4-1&2	M_n =	My	
	M_n =	23,364.0	ft-lb

GOVERNING CAPACITY - SIMPLE SPAN

STRONG DIRECTION			WEAK DIRECTION		
M_n^+ =	23,364.0	ft-lb	M_n =	5,368.0	ft-lb
M_n^+/Ω_b =	**13,990.4**	**ft-lb**	**M_n/Ω_b =**	**3,214.4**	**ft-lb**
$\Phi_b*M_n^+$ =	**21,027.60**	**ft-lb**	**Φ_b*M_n =**	**4,831.20**	**ft-lb**

4 S.T.E.L.
ENGINEERING, INC.

109 EAST ESCALONES
SAN CLEMENTE, CA 92672
PHONE (949) 388-9333
FAX (949) 388-3773

PURLIN DESIGN - AEP - C 10 x 3.5 12 GA

FLEXURE - CANTILEVER SPAN

	Ω_b =	1.67		M_1/M_2 =	0.0	
	Φ_b =	0.90				
C3.1.2.1-9	σ_t =	$(G*J+(\pi^2*E*C_w/(K_t*L_t)^2))/(A*r_o^2)$				
	σ_t =	181,637	psi			
C3.1.2.1-11	σ_{ex} =	$\pi^2E/(K_x*L_x/r_x)^2$		σ_{ey} =	$\pi^2E/(K_y*L_y/r_y)^2$	
C3.1.2.1-8	σ_{ex} =	1,909,962	psi	σ_{ey} =	197,451	psi

	STRONG DIRECTION			WEAK DIRECTION		
		NOMINAL SECTION STRENGTH				
C3.1.1-1	M_y =	$S_{xe}*F_y$		M_y =	$S_{ye}*F_y$	
	M_y =	23,364.0	ft-lb	M_y =	5,368.0	ft-lb
		LATERAL-TORSIONAL BUCKLING STRENGTH				
C3.1.2.1-12	C_s =	-1.00		C_{TF} =	0.60	
C3.1.2.1-4	F_e =	$C_b*r_o*A*\sqrt{(\sigma_{ey}*\sigma_t)}/S_f$		F_e =	$(C_s*A*\sigma_{ex}/(C_{TF}*S_f))*(j+C_s*\sqrt{(j^2+r_o^2*(\sigma_t/\sigma_{ex}))}$	
C3.1.2.1-14	F_e =	$C_b*\pi^2*E*d*I_{yc}/(S_f*(K_y*L_y)^2)$				
C3.1.2.1-10	F_e =	326,163.16	psi	F_e =	973,163	psi
C3.1.2.1-2	F_c =	Fy		F_c =	Fy	
	F_c =	55,000.0	psi	F_c =	55,000.0	psi
C3.1.2.1-1	M_n =	S_c*F_c		M_n =	S_c*F_c	
	M_n =	23,364.0	ft-lb	M_n =	5,368.0	ft-lb

4 S.T.E.L.
ENGINEERING, INC.

109 EAST ESCALONES
SAN CLEMENTE, CA 92672
PHONE (949) 388-9333
FAX (949) 388-3773

PURLIN DESIGN - AEP - C 10 x 3.5 12 GA

FLEXURE - CANTILEVER SPAN

STRONG DIRECTION

DISTORTIONAL BUCKLING STRENGTH

C3.1.4-12	L_{cr} =	28.2	in
	L_m =	24.0	in
	L =	MIN(L_m,L_{cr})	
	L =	24.00	in
C3.1.4-11	ß =	$1.0 \le 1+.4*(L/L_m)^{0.7}*(1-M_1/M_2)^{0.7} \le 1.3$	
	ß =	1.3	
C3.1.4-13	$k_{\Phi fe}$ =	2,126.41	lb
C3.1.4-14	$k_{\Phi we}$ =	1,111.70	lb
	k_{Φ} =	1,700.00	lb
C3.1.4-15	$k_{\Phi fg}$ =	0.05	in^2
C3.1.4-16	$k_{\Phi wg}$ =	0.0050	in^2
C3.1.4-6	F_d =	$ß*(k_{\Phi fe} + k_{\Phi we} + k_{\Phi})/(k_{\Phi fg} + k_{\Phi wg})$	
	F_d =	123,800.73	psi
C3.1.4-3	λ_d =	$\sqrt{(M_y/M_{crd})}$	
	λ_d =	0.67	
C3.1.4-1&2	M_n =	My	
	M_n =	23,364.0	ft-lb

GOVERNING CAPACITY - CANTILEVER SPAN

STRONG DIRECTION			WEAK DIRECTION		
M_n^- =	23,364.0	ft-lb	M_n =	5,368.0	ft-lb
M_n^-/Ω_b =	**13,990.4**	**ft-lb**	**M_n/Ω_b =**	**3,214.4**	**ft-lb**
$\Phi_b*M_n^-$ =	**21,027.60**	**ft-lb**	**Φ_b*M_n =**	**4,831.20**	**ft-lb**

4 S.T.E.L.
ENGINEERING, INC.

109 EAST ESCALONES
SAN CLEMENTE, CA 92672
PHONE (949) 388-9333
FAX (949) 388-3773

PURLIN DESIGN - AEP - C 10 x 3.5 12 GA

REVERSE FLEXURE

	NEGATIVE BENDING - SIMPLE SPAN			POSITIVE BENDING - CANTILEVER		
	Ω_b =	1.67				
	Φ_b =	0.90				
	M_1/M_2 =	0.0		M_1/M_2 =	0.0	
C3.1.2.1-9	σ_t =	$(G*J+(\pi^2*E*C_w/(K_t*L_t)^2))/(A*r_o^2)$				
	σ_t =	19,776	psi	σ_t =	462,109	psi
C3.1.2.1-8	σ_{ey} =	$\pi^2E/(K_y*L_y/r_y)^2$		σ_{ey} =	$\pi^2E/(K_y*L_y/r_y)^2$	
	σ_{ey} =	19,690	psi	σ_{ey} =	505,475	psi
		NOMINAL SECTION STRENGTH				
C3.1.1-1	M_y =	$S_{xe}*F_y$		M_y =	$S_{xe}*F_y$	
	M_y =	23,364.0	ft-lb	M_y =	23,364.0	ft-lb
		LATERAL-TORSIONAL BUCKLING STRENGTH				
C3.1.2.1-4	F_e =	$C_b*r_o*A*\sqrt{(\sigma_{ey}*\sigma_t)}/S_f$		F_e =	$C_b*r_o*A*\sqrt{(\sigma_{ey}*\sigma_t)}/S_f$	
C3.1.2.1-14	F_e =	$C_b*\pi^2*E*d*I_{yc}/(S_f*(K_y*L_y)^2)$		F_e =	$C_b*\pi^2*E*d*I_{yc}/(S_f*(K_y*L_y)^2)$	
C3.1.2.1-10	F_e =	42,241.51	psi	F_e =	834,978	psi
C3.1.2.1-2	F_c =	(10/9)*Fy*(1-10*Fy/(36*Fe))		F_c =	Fy	
	F_c =	39,008.6	psi	F_c =	55,000.0	psi
C3.1.2.1-1	M_n =	S_c*F_c		M_n =	S_c*F_c	
	M_n =	16,570.9	ft-lb	M_n =	23,364.0	ft-lb

4 S.T.E.L.
ENGINEERING, INC.

109 EAST ESCALONES
SAN CLEMENTE, CA 92672
PHONE (949) 388-9333
FAX (949) 388-3773

PURLIN DESIGN - AEP - C 10 x 3.5 12 GA

REVERSE FLEXURE

	NEGATIVE BENDING - SIMPLE SPAN			POSITIVE BENDING - CANTILEVER		
	DISTORTIONAL BUCKLING STRENGTH					
C3.1.4-12	L_{cr} =	28.2	in	L_{cr} =	28.2	in
	L_m =	152.0	in	L_m =	15.0	in
	L =	MIN(L_m,L_{cr})		L =	MIN(L_m,L_{cr})	
	L =	28.24	in	L =	15.00	in
C3.1.4-11	ß =	$1.0 \le 1+.4*(L/L_m)^{0.7}*(1-M_1/M_2)^{0.7} \le 1.3$				
	ß =	1.1		ß =	1.3	
C3.1.4-13	$k_{\Phi fe}$ =	1,175.43	lb	$k_{\Phi fe}$ =	12,612.63	lb
C3.1.4-14	$k_{\Phi we}$ =	1,062.72	lb	$k_{\Phi we}$ =	1,397.65	lb
	k_{Φ} =	1,700.00	lb	k_{Φ} =	1,700.00	lb
C3.1.4-15	$k_{\Phi fg}$ =	0.03	in^2	$k_{\Phi fg}$ =	0.12	in^2
C3.1.4-16	$k_{\Phi wg}$ =	0.0037	in^2	$k_{\Phi wg}$ =	0.0120	in^2
C3.1.4-6	F_d =	$ß*(k_{\Phi fe} + k_{\Phi we} + k_{\Phi})/(k_{\Phi fg} + k_{\Phi wg})$				
	F_d =	117,935.84	psi	F_d =	154,860.42	psi
C3.1.4-3	λ_d =	$\sqrt{(M_y/M_{crd})}$		λ_d =	$\sqrt{(M_y/M_{crd})}$	
	λ_d =	0.68		λ_d =	0.60	
C3.1.4-1&2	M_n =	$My*(1-0.22*\sqrt{(Mcrd/My)})*\sqrt{(Mcrd/My)}$				
	M_n =	23,191.0	ft-lb	M_n =	23,364.0	ft-lb

GOVERNING CAPACITY

NEGATIVE BENDING - SIMPLE SPAN			POSITIVE BENDING - CANTILEVER		
M_n^- =	16,570.9	ft-lb	M_n^+ =	23,364.0	ft-lb
M_n^-/Ω_b =	**9,922.7**	**ft-lb**	**M_n^+/Ω_b =**	**13,990.4**	**ft-lb**
$\Phi_b*M_n^-$ =	**14,913.78**	**ft-lb**	**$\Phi_b*M_n^+$ =**	**21,027.60**	**ft-lb**

4 S.T.E.L.
ENGINEERING, INC.

109 EAST ESCALONES
SAN CLEMENTE, CA 92672
PHONE (949) 388-9333
FAX (949) 388-3773

TOPOCK POND POWER BUILDING
17'-0" WIDE 2-POST STR. x 25'-4" O.C.

JOB #: 14-1195
11/26/2014

PURLIN LOAD COMBINATIONS (ASD)

MEMBER CAPACITIES **AEP - C 10 x 3.5 12 GA** CHECK: **OK**

Max Shear Stress: 15%
Max Bending Stress: 97%

		STRONG AXIS			WEAK AXIS	
	V_n/Ω =	10,303.4	lb	V_n/Ω =	15,159.4	lb
Simple +	M_n^+/Ω =	13,990.4	ft-lb	M_n/Ω =	3,214.4	ft-lb
Simple -	M_n^-/Ω =	9,922.7	ft-lb			
Cant -	M_n^-/Ω =	13,990.4	ft-lb	M_n/Ω =	3,214.4	ft-lb
Cant +	M_n^+/Ω =	13,990.4	ft-lb			

CHECK DEFLECTIONS

D

$\Delta_{ALLOW,SIMPLE}$ =	2.53	in	
$\Delta_{ALLOW,CANT}$ =	0.40	in	
Δ_{SIMPLE} =	0.11	in	**OK**
Δ_{CANT} =	0.00	in	**OK**

L_r OR S OR W

$\Delta_{ALLOW,SIMPLE}$ =	1.69	in	
$\Delta_{ALLOW,CANT}$ =	0.27	in	
Δ_{SIMPLE} =	0.82	in	**OK**
Δ_{CANT} =	0.00	in	**OK**

4 S.T.E.L.
ENGINEERING, INC.

109 EAST ESCALONES
SAN CLEMENTE, CA 92672
PHONE (949) 388-9333
FAX (949) 388-3773

TOPOCK POND POWER BUILDING
17'-0" WIDE 2-POST STR. x 25'-4" O.C.

JOB #: 14-1195
11/26/2014

PURLIN LOAD COMBINATIONS (ASD)

LOAD CASES

D

V_{SIMPLE} =	131.75	lb
V_{CANT} =	20.80	lb
M_{SIMPLE} =	834.39	ft-lb
M_{CANT} =	20.80	ft-lb

L_r

V_{SIMPLE} =	950.00	lb
V_{CANT} =	150.00	lb
M_{SIMPLE} =	6,016.67	ft-lb
M_{CANT} =	150.00	ft-lb

S

V_{SIMPLE} =	0.00	lb
V_{CANT} =	0.00	lb
M_{SIMPLE} =	0.00	ft-lb
M_{CANT} =	0.00	ft-lb

W_{UP}

V_{SIMPLE} =	-2,657.64	lb
V_{CANT} =	-419.63	lb
M_{SIMPLE} =	-16,831.75	ft-lb
M_{CANT} =	-419.63	ft-lb

W_{DOWN}

V_{SIMPLE} =	318.92	lb
V_{CANT} =	50.36	lb
M_{SIMPLE} =	2,019.81	ft-lb
M_{CANT} =	50.36	ft-lb

W (Weak Direction)

V_{SIMPLE} =	85.04	lb
V_{CANT} =	13.43	lb
M_{SIMPLE} =	107.72	ft-lb
M_{CANT} =	2.69	ft-lb

E (Weak Direction)

V_{SIMPLE} =	27.11	lb
V_{CANT} =	4.28	lb
M_{SIMPLE} =	34.33	ft-lb
M_{CANT} =	0.86	ft-lb

4 S.T.E.L.
ENGINEERING, INC.

109 EAST ESCALONES
SAN CLEMENTE, CA 92672
PHONE (949) 388-9333
FAX (949) 388-3773

PURLIN LOAD COMBINATIONS (ASD)

LOAD COMBOS

D				% Stressed
V_{SIMPLE} =	131.75	lb	OK	1%
V_{CANT} =	20.80	lb	OK	0%
M_{SIMPLE} =	834.39	ft-lb	OK	6%
M_{CANT} =	20.80	ft-lb	OK	0%
$\sqrt{((\Omega M/M_n)^2+(\Omega V/V_n)^2)}$ =	0.00	≤ 1.0	OK	0%
D + L_r				
V_{SIMPLE} =	1,081.75	lb	OK	10%
V_{CANT} =	170.80	lb	OK	2%
M_{SIMPLE} =	6,851.06	ft-lb	OK	49%
M_{CANT} =	170.80	ft-lb	OK	1%
$\sqrt{((\Omega M/M_n)^2+(\Omega V/V_n)^2)}$ =	0.02	≤ 1.0	OK	2%
D + S				
V_{SIMPLE} =	131.75	lb	OK	1%
V_{CANT} =	20.80	lb	OK	0%
M_{SIMPLE} =	834.39	ft-lb	OK	6%
M_{CANT} =	20.80	ft-lb	OK	0%
$\sqrt{((\Omega M/M_n)^2+(\Omega V/V_n)^2)}$ =	0.00	≤ 1.0	OK	0%
D + 0.6W_{DOWN}				
V_{SIMPLE} =	323.10	lb	OK	3%
V_{CANT} =	51.02	lb	OK	0%
M_{SIMPLE} =	2,046.28	ft-lb	OK	15%
M_{CANT} =	51.02	ft-lb	OK	0%
$\sqrt{((\Omega M/M_n)^2+(\Omega V/V_n)^2)}$ =	0.01	≤ 1.0	OK	1%
D + 0.75(0.6W_{DOWN}) + 0.75L_r				
V_{SIMPLE} =	987.76	lb	OK	10%
V_{CANT} =	155.96	lb	OK	2%
M_{SIMPLE} =	6,255.81	ft-lb	OK	45%
M_{CANT} =	155.96	ft-lb	OK	1%
$\sqrt{((\Omega M/M_n)^2+(\Omega V/V_n)^2)}$ =	0.02	≤ 1.0	OK	2%

4 S.T.E.L.
ENGINEERING, INC.

109 EAST ESCALONES
SAN CLEMENTE, CA 92672
PHONE (949) 388-9333
FAX (949) 388-3773

PURLIN LOAD COMBINATIONS (ASD)

LOAD COMBOS

$D + 0.75(0.6W_{DOWN}) + 0.75S$

V_{SIMPLE} =	275.26	lb	OK		3%
V_{CANT} =	43.46	lb	OK		0%
M_{SIMPLE} =	1,743.31	ft-lb	OK		12%
M_{CANT} =	43.46	ft-lb	OK		0%
$\sqrt{((\Omega M/M_n)^2+(\Omega V/V_n)^2)}$ =	0.01	≤ 1.0	OK		1%

$D + 0.6W_{WEAK}$	*X*			*Y*	
V_{SIMPLE} =	182.77	lb	OK		
V_{CANT} =	28.86	lb	OK		
M_{SIMPLE} =	834.39	ft-lb	M_{SIMPLE} =	64.63	ft-lb
M_{CANT} =	20.80	ft-lb	M_{CANT} =	1.61	ft-lb

$\Omega^*M_x/M_{nx} + \Omega^*M_y/M_{ny} \leq 1.0$

$\Omega^*M_x/M_{nx} + \Omega^*M_y/M_{ny}$ =	0.08	Simple	OK
$\Omega^*M_x/M_{nx} + \Omega^*M_y/M_{ny}$ =	0.00	Cantilever	OK

$D + 0.7E$	*X*			*Y*	
V_{SIMPLE} =	150.72	lb	OK		
V_{CANT} =	23.80	lb	OK		
M_{SIMPLE} =	834.39	ft-lb	M_{SIMPLE} =	24.03	ft-lb
M_{CANT} =	20.80	ft-lb	M_{CANT} =	0.60	ft-lb

$\Omega^*M_x/M_{nx} + \Omega^*M_y/M_{ny} \leq 1.0$

$\Omega^*M_x/M_{nx} + \Omega^*M_y/M_{ny}$ =	0.07	Simple	OK
$\Omega^*M_x/M_{nx} + \Omega^*M_y/M_{ny}$ =	0.00	Cantilever	OK

4 S.T.E.L.
ENGINEERING, INC.

109 EAST ESCALONES
SAN CLEMENTE, CA 92672
PHONE (949) 388-9333
FAX (949) 388-3773

PURLIN LOAD COMBINATIONS (ASD)

LOAD COMBOS

$D + 0.75(0.6W_{WEAK}) + 0.75L_r$ — *Y*

V_{SIMPLE} =	882.52	lb	**OK**		
V_{CANT} =	139.34	lb	**OK**		
M_{SIMPLE} =	5,346.89	ft-lb	M_{SIMPLE} =	48.48	ft-lb
M_{CANT} =	133.30	ft-lb	M_{CANT} =	1.21	ft-lb

$\Omega^*M_x/M_{nx} + \Omega^*M_y/ \Omega^*M_x/M_{nx} + \Omega^*M_y/M_{ny} \leq 1.0$

$\Omega^*M_x/M_{nx} + \Omega^*M_y/M_{ny}$ =	0.40	Simple	**OK**
$\Omega^*M_x/M_{nx} + \Omega^*M_y/M_{ny}$ =	0.01	Cantilever	**OK**

$D + 0.75(0.6W_{WEAK}) + 0.75S$ — *Y*

V_{SIMPLE} =	170.02	lb	**OK**		
V_{CANT} =	26.84	lb	**OK**		
M_{SIMPLE} =	834.39	ft-lb	M_{SIMPLE} =	48.48	ft-lb
M_{CANT} =	20.80	ft-lb	M_{CANT} =	1.21	ft-lb

$\Omega^*M_x/M_{nx} + \Omega^*M_y/M_{ny} \leq 1.0$

$\Omega^*M_x/M_{nx} + \Omega^*M_y/M_{ny}$ =	0.07	Simple	**OK**
$\Omega^*M_x/M_{nx} + \Omega^*M_y/M_{ny}$ =	0.00	Cantilever	**OK**

$D + 0.75(0.7E) + 0.75L_r$ *X* — *Y*

V_{SIMPLE} =	858.48	lb	**OK**		
V_{CANT} =	135.55	lb	**OK**		
M_{SIMPLE} =	5,346.89	ft-lb	M_{SIMPLE} =	18.03	ft-lb
M_{CANT} =	133.30	ft-lb	M_{CANT} =	0.45	ft-lb

$\Omega^*M_x/M_{nx} + \Omega^*M_y/M_{ny} \leq 1.0$

$\Omega^*M_x/M_{nx} + \Omega^*M_y/M_{ny}$ =	0.39	Simple	**OK**
$\Omega^*M_x/M_{nx} + \Omega^*M_y/M_{ny}$ =	0.01	Cantilever	**OK**

4 S.T.E.L.
ENGINEERING, INC.

109 EAST ESCALONES
SAN CLEMENTE, CA 92672
PHONE (949) 388-9333
FAX (949) 388-3773

TOPOCK POND POWER BUILDING
17'-0" WIDE 2-POST STR. x 25'-4" O.C.

JOB #: 14-1195
11/26/2014

PURLIN LOAD COMBINATIONS (ASD)

LOAD COMBOS					
D + 0.75(0.7E) + 0.75S	*X*			*Y*	
V_{SIMPLE} =	145.98	lb	OK		
V_{CANT} =	23.05	lb	OK		
M_{SIMPLE} =	834.39	ft-lb	M_{SIMPLE} =	18.03	ft-lb
M_{CANT} =	20.80	ft-lb	M_{CANT} =	0.45	ft-lb
$\Omega^*M_x/M_{nx} + \Omega^*M_y/M_{ny} \leq 1.0$					
$\Omega^*M_x/M_{nx} + \Omega^*M_y/M_{ny}$ =	0.07	Simple	OK		
$\Omega^*M_x/M_{nx} + \Omega^*M_y/M_{ny}$ =	0.00	Cantilever	OK		
0.6D + 0.6W_{UP}					% Stressed
V_{SIMPLE} =	-1,515.54	lb	OK		15%
V_{CANT} =	-239.30	lb	OK		2%
M_{SIMPLE} =	-9,598.41	ft-lb	OK		97%
M_{CANT} =	-239.30	ft-lb	OK		2%
$\sqrt{((\Omega M/M_n)^2+(\Omega V/V_n)^2)}$ =	0.03	≤ 1.0	OK		3%

4 S.T.E.L.
ENGINEERING, INC.

109 EAST ESCALONES
SAN CLEMENTE, CA 92672
PHONE (949) 388-9333
FAX (949) 388-3773

PURLIN CONNECTION

PURLIN TO STUD WALL CONNECTION

PURLIN TO CLIP ANGLE

PURLIN V_L=V_R=	1,081.75	lb	PURLIN t =	0.105	in
USING	2	1/4-14	SCREWS		
lb/BOLT =	$V_{L\text{-}OR\text{-}R}$/(# BOLTS)				
lb/BOLT =	540.87	lb			
ALLOWABLE =	544.00	lb	**OK**		

USE (2) 1/4-14 SCREWS EACH PURLIN TO THE CLIP ANGLE

CLIP ANGLE

Height (H) =	4.00	in	F_y =	36,000	psi
Width (b) =	4.00	in	Ω =	1.67	
Thickness (t) =	0.06	in			
Length (L) =	2.00	in			

P = FROM WEAK DIRECTION LOAD OF PURLIN
P = 37.95 lb

M = P*(b/2)
M = 75.90 in-lb

Z_{req} = M*Ω/F_y = 0.0035 in^3

Z = $bt^2/4$
t = √(Z*4/b)
t = 0.06 in **OK**

CLIP ANGLE TO RIM TRACK

M =	75.90	in-lb	b =	2.00	in

T = M/b = M/b
T = M/b = 37.95 lb

USING	2	1/4-14	SCREWS
lb/BOLT =	$V_{L\text{-}OR\text{-}R}$/(# BOLTS)		
lb/BOLT =	18.97	lb	
ALLOWABLE =	544.00	lb	**OK**

USE 4" WIDE BY 4" TALL BY 2" LONG BY 1/16" THICK ASTM A36 STEEL CLIP. USE A 4" WIDE BY 6 1/2" LONG BY 1/16" THICK ASTM A36 STEEL PLATE BENT WITH A 1/2" DIAMETER RADIUS TO CREATE THE CLIP. USE (2) 1/4-14 SCREWS EACH CLIP ANGLE TO BEAM

PURLIN TO STUD WALL

PURLIN TO CLIP ANGLE

USE (2) 1/4-14 SCREWS EACH PURLIN TO THE CLIP ANGLE

CLIP ANGLE

USE 4" WIDE BY 4" TALL BY 2" LONG BY 1/16" THICK ASTM A36 STEEL CLIP. USE A 4" WIDE BY 6 1/2" LONG BY 1/16" THICK ASTM A36 STEEL PLATE BENT WITH A 1/2" DIAMETER RADIUS TO CREATE THE CLIP. USE (2) 1/4-14 SCREWS EACH CLIP ANGLE TO BEAM

4 S.T.E.L.
ENGINEERING, INC.

109 EAST ESCALONES
SAN CLEMENTE, CA 92672
PHONE (949) 388-9333
FAX (949) 388-3773

PURLIN CONNECTION

RIM TRACK TO TOP STUD WALL TRACK

USING	1/4-14	SCREWS	
ALLOWABLE =	544.00	lb	
SPACING (s) =	26	in	
T = M/b =	37.95	lb	
lb/BOLT =	T * s		
lb/BOLT =	82.22	lb	**OK**

USE 1/4-14 SCREWS @ 26" O.C. MAX ALONG RIM TRACK TO TOP STUD WALL TRACK

USE 1/4-14 SCREWS @ 26" O.C. MAX ALONG RIM TRACK TO TOP STUD WALL TRACK

RIM TRACK TO TOP STUD WALL TRACK

USING	5/8	in ϕ A307 J-BOLTS	
ALLOWABLE =	4,140	lb	
SPACING (s) =	36	in	
T = M/b =	37.95	lb	
lb/BOLT =	T * s		
lb/BOLT =	113.85	lb	**OK**

USE 5/8 in ϕ A307 J-BOLTS @ 36" O.C. MAX ALONG BOTTOM STUD WALL TRACK TO TOP OF CMU WALL

USE 5/8 in ϕ A307 J-BOLTS @ 36" O.C. MAX ALONG BOTTOM STUD WALL TRACK TO TOP OF CMU WALL

4 S.T.E.L.
ENGINEERING, INC.

109 EAST ESCALONES
SAN CLEMENTE, CA 92672
PHONE (949) 388-9333
FAX (949) 388-3773

COLUMN - 17'-0" WIDE 2-POST STR. x 25'-4" O.C.

COLUMN - 17'-0" WIDE 2-POST STR. x 25'-4" O.C.
STUDS

DEAD LOAD

Deck	1.06	psf			
Misc.	0.00	psf			
Purlins	1.71	psf			
Beams	0.23	psf			
Columns	0.67	psf	SELF WT (w_{SELF}) =	6.16	plf
Total	**3.67**	**psf**			

Trib. Width (TW) =	2.13	ft	Angle (A) =	9.46	degrees
Length (L) =	14.67	ft	Col Height (CH) =	3.39	ft
Trib. Area (TA) =	31.17	ft^2			

FIND CENTER OF MASS FOR LOCATION OF SEISMIC "FORCE"

SOURCE	P	H	P*H	$h_n = \Sigma P*H/\Sigma P$
Snow	0.00	5.060	0.00	
Deck	33.04	4.976	164.40	
Purlin	53.41	4.476	239.06	
Beam	7.03	3.726	26.18	
Column	20.91	1.696	35.47	
Σ	**114.38**		**465.11**	**4.066**

Total Seismic Weight = $(DL+p_{S,E})*TA$
W = 114.38 lb

COLUMN INFO **AEP - C 6 x 3.5 10 GA**

I_x =	11.10	in^4	E =	29,500,000	psi
I_y =	3.19	in^4			
V_n/Ω =	16,706.3	lb	V_n/Ω =	19,490.6	lb
$\Phi*V_n$ =	25,393.5	lb	$\Phi*V_n$ =	29,625.8	lb
M_n/Ω =	2,530.7	ft-lb	M_n/Ω =	2,730.80	ft-lb
$\Phi*M_n$ =	3,803.6	ft-lb	$\Phi*M_n$ =	4,104.39	ft-lb
P_n/Ω =	5,361.22	lb	P_n/Ω =	5,361.22	lb
$\Phi*P_n$ =	8,202.67	lb	$\Phi*P_n$ =	8,202.67	lb
P_{e1} =	N/A	lb	P_{e1} =	N/A	lb
ΣP_{e2} =	N/A	lb	ΣP_{e2} =	N/A	lb
P_{Ex} =	11,818,842.70	lb	P_{Ey} =	3,392,562.0	lb

4 S.T.E.L.
ENGINEERING, INC.

109 EAST ESCALONES
SAN CLEMENTE, CA 92672
PHONE (949) 388-9333
FAX (949) 388-3773

COLUMN - 17'-0" WIDE 2-POST STR. x 25'-4" O.C.

SEISMIC LOADS

ρ =	1.0		R =	1.25	
I =	1.0		Ω_O =	1.25	
h_n =	4.07	ft	C_d =	1.25	
S_S =	0.24	g	S_1 =	0.13	g
F_a =	1.6		F_V =	2.30	
S_{MS} =	F_a*S_s		S_{M1} =	F_V*S_1	
S_{MS} =	0.4		S_{M1} =	0.3	
S_{DS} =	(2/3)*S_{MS}		S_{D1} =	(2/3)*S_{M1}	
S_{DS} =	0.257		S_{D1} =	0.192	

BUILDING PERIOD

T_a =	C_t*h_n^x		C_t =	0.02	
T_a =	0.057		x =	0.75	
T_0 =	0.2*S_{D1}/S_{DS}		T_S =	S_{D1}/S_{DS}	
T_0 =	0.149	sec	T_S =	0.746	sec
T_L =	8.0	sec			
k =	3*E*I/h_n^3		T =	2*π*√(m/k)	
k_x =	8,454.32	lb/in	T_x =	0.037	sec
k_y =	2,426.79	lb/in	T_y =	0.069	sec

SEISMIC LOADS

V =	C_s*W		C_s =	S_{DS}/(R/I)	
V =	0.206	*(DL+$p_{S,E}$)*TA	C_s =	0.206	
V =	23.5	lb			
F_X =	C_{VX}*V		C_s =	S_{D1}/(T*(R/I)	
C_{VX} =	1.00		C_s =	2.679	MAX
F_X =	23.5	lb	C_S =	0.01	MIN
E =	E_h + E_v				
E =	ρ*F_X + .2*S_{DS}*TDL				
E_h =	(ρ or Ω_o)*F_x		E_v =	.2*S_{DS}*W	
E_h =	**23.53**	**lb**	**E_v =**	**5.88**	**lb**

4 S.T.E.L.
ENGINEERING, INC.

109 EAST ESCALONES
SAN CLEMENTE, CA 92672
PHONE (949) 388-9333
FAX (949) 388-3773

COLUMN - 17'-0" WIDE 2-POST STR. x 25'-4" O.C.

CHECK VEHICLE IMPACT LOAD

.7*E =	16.47	lb	e_1 =	3.39	ft
P =	6,000.00	lb	e_2 =	1.50	ft

M_1 = (.7*E)*e_1

M_1 = 55.89 ft-lb

M_2 = P*e_2

M_2 = 9,000.00 ft-lb VEHICLE IMPACT LOAD GOVERNS

4 S.T.E.L.
ENGINEERING, INC.

109 EAST ESCALONES
SAN CLEMENTE, CA 92672
PHONE (949) 388-9333
FAX (949) 388-3773

COLUMN - 17'-0" WIDE 2-POST STR. x 25'-4" O.C.

APPLIED LOADS FROM BEAM

D

P_D =	296.77	lb
V_D =	0.00	lb
$M_{T\text{-}D}$ =	0.00	ft-lb
$M_{B\text{-}D}$ =	0.00	ft-lb

L_r

P_{Lr} =	1,876.47	lb
V_{Lr} =	0.00	lb
$M_{T\text{-}Lr}$ =	0.00	ft-lb
$M_{B\text{-}Lr}$ =	0.00	ft-lb

S

P_S =	0.00	lb
V_S =	0.00	lb
$M_{T\text{-}S}$ =	0.00	ft-lb
$M_{B\text{-}S}$ =	0.00	ft-lb

$W_{DOWN\text{-}1}$

P_{DOWN} =	-683.06	lb
V_{DOWN} =	-113.84	lb
$M_{T\text{-}DOWN}$ =	0.00	ft-lb
$M_{B\text{-}DOWN}$ =	-386.25	ft-lb

$W_{DOWN\text{-}2}$

P_{DOWN} =	2,025.83	lb
V_{DOWN} =	337.64	lb
$M_{T\text{-}DOWN}$ =	0.00	ft-lb
$M_{B\text{-}DOWN}$ =	1,145.56	ft-lb

$W_{DOWN\text{-}3}$

P_{DOWN} =	1,427.85	lb
V_{DOWN} =	237.98	lb
$M_{T\text{-}DOWN}$ =	0.00	ft-lb
$M_{B\text{-}DOWN}$ =	807.42	ft-lb

$W_{UP\text{-}1}$

P_{UP} =	-1,806.09	lb
V_{UP} =	-301.01	lb
$M_{T\text{-}UP}$ =	0.00	ft-lb
$M_{B\text{-}UP}$ =	-1,021.30	ft-lb

$W_{UP\text{-}2}$

P_{UP} =	-581.35	lb
V_{UP} =	-96.89	lb
$M_{T\text{-}UP}$ =	0.00	ft-lb
$M_{B\text{-}UP}$ =	-328.74	ft-lb

$W_{UP\text{-}3}$

P_{UP} =	-1,325.86	lb
V_{UP} =	-220.98	lb
$M_{T\text{-}UP}$ =	0.00	ft-lb
$M_{B\text{-}UP}$ =	-749.74	ft-lb

4 S.T.E.L.
ENGINEERING, INC.

109 EAST ESCALONES
SAN CLEMENTE, CA 92672
PHONE (949) 388-9333
FAX (949) 388-3773

COLUMN - 17'-0" WIDE 2-POST STR. x 25'-4" O.C.

APPLIED LOADS FROM BEAM

W_{WEAK}

P_{WEAK} =	0.00	lb	
V_{WEAK} =	308.43	lb	(Weak Direction)
$M_{T\text{-}WEAK}$ =	0.00	ft-lb	
$M_{B\text{-}WEAK}$ =	1,046.45	ft-lb	(Weak Direction)

E

P_E =	5.88	lb	(E_V)
V_E =	23.53	lb	(E_h, Strong or Weak Direction)
$M_{T\text{-}E}$ =	0.00	ft-lb	
$M_{B\text{-}E}$ =	79.85	ft-lb	(Strong or Weak Direction)

4 S.T.E.L.
ENGINEERING, INC.

109 EAST ESCALONES
SAN CLEMENTE, CA 92672
PHONE (949) 388-9333
FAX (949) 388-3773

COLUMN DESIGN - AEP - C 6 x 3.5 10 GA
STUDS

COLUMN DESIGN - AEP - C 6 x 3.5 10 GA

AEP - C 6 x 3.5 10 GA

Section Properties

S_{xe} =	3.58	in^3	S_y =	1.24	in^3
I_x =	11.10	in^4	I_y =	3.19	in^4
F_y =	55.0	ksi	E =	29,500,000	psi
D (LIP) =	0.989	in	I_{yc} =	1.59	in^4
Weight =	6.16	plf	Θ =	89.9	Degrees
h_o =	6.00	in	b_o =	3.50	in
r_x =	2.43	in	r_y =	1.26	in
t =	0.135	in	k_v =	5.34	
x_o =	-2.930	in	μ =	0.3	
C_w =	27.33	in^6	J =	0.01148	in^4
$x_{o,FLANGE}$ =	1.36	in	$y_o = h_y$ =	0.11	in
A (full) =	1.890	in^2	S_f =	3.70	in^3
G =	11,346,154	psi	r_o =	4.01	in
I_{xf} =	0.04	in^4	A_e =	1.8126	in^2
I_{xyf} =	0.09	in^4	j =	4.01	in
I_{yf} =	0.80	in^4	ξ_{web} =	2	
h_x =	-2.14	in	C_{wf} =	0.00	in^6
A_f =	0.61	in^2	J_f =	0.004	in^4
			S.A. =	19	in^2

$L_{b,CANTL}$ =	136.7	in
$C_{b^-,CANTL}$ =	1.00	
K_{CANTL} =	2.00	

4 S.T.E.L.
ENGINEERING, INC.

109 EAST ESCALONES
SAN CLEMENTE, CA 92672
PHONE (949) 388-9333
FAX (949) 388-3773

COLUMN DESIGN - AEP - C 6 x 3.5 10 GA

AISI S100-: **SHEAR**

	Ω_v =	1.60		$\sqrt{(E*k_v/F_y)}$ =	53.52	
	Φ_v =	0.95				
	STRONG DIRECTION			**WEAK DIRECTION**		
	h/t =	44.44		b/t =	25.93	
C3.2.1-2,3,4b						
	F_v =	0.60*Fy		F_v =	0.60*Fy	
	F_v =	33,000.0	psi	F_v =	33,000.0	psi
C3.2.1-1						
	V_n =	A_w*F_v		V_n =	A_w*F_v	
	V_n =	26,730.00	lb	V_n =	31,185.00	lb
	V_n/Ω_v =	**16,706.25**	**lb**	**V_n/Ω_v =**	**19,490.63**	**lb**
	Φ_v*V_n =	**25,393.50**	**lb**	**Φ_v*V_n =**	**29,625.75**	**lb**

FLEXURE - CANTILEVER SPAN

	Ω_b =	1.67		M_1/M_2 =	0.5	
	Φ_b =	0.90				
C3.1.2.1-9	σ_t =	$(G*J+(\pi^2*E*C_w/(K_t*L_t)^2))/(A*r_o^2)$				
	σ_t =	7,787	psi			
C3.1.2.1-11	σ_{ex} =	$\pi^2E/(K_x*L_x/r_x)^2$		σ_{ey} =	$\pi^2E/(K_y*L_y/r_y)^2$	
C3.1.2.1-8	σ_{ex} =	23,071	psi	σ_{ey} =	6,142	psi
	STRONG DIRECTION			**WEAK DIRECTION**		
		NOMINAL SECTION STRENGTH				
C3.1.1-1	M_y =	$S_{xe}*F_y$		M_y =	$S_{ye}*F_y$	
	M_y =	16,406.0	ft-lb	M_y =	5,671.9	ft-lb
		LATERAL-TORSIONAL BUCKLING STRENGTH				
C3.1.2.1-12	C_s =	-1.00		C_{TF} =	0.40	
C3.1.2.1-4	F_e =	$C_b*r_o*A*\sqrt{(\sigma_{ey}*\sigma_t)}/S_f$		F_e =	$(C_s*A*\sigma_{ex}/(C_{TF}*S_f))*(j+C_s*\sqrt{(j^2+r_o^2*(\sigma_t/\sigma_{ex}))}$	
C3.1.2.1-14	F_e =	$C_b*\pi^2*E*d*I_{yc}/(S_f*(K_y*L_y)^2)$				
C3.1.2.1-10	F_e =	14,167.99	psi	F_e =	55,282	psi
C3.1.2.1-2	F_c =	Fe		F_c =	(10/9)*Fy*(1-10*Fy/(36*Fe))	
	F_c =	14,168.0	psi	F_c =	44,222.4	psi
C3.1.2.1-1	M_n =	S_c*F_c		M_n =	S_c*F_c	
	M_n =	4,226.2	ft-lb	M_n =	4,560.4	ft-lb

4 S.T.E.L.
ENGINEERING, INC.

109 EAST ESCALONES
SAN CLEMENTE, CA 92672
PHONE (949) 388-9333
FAX (949) 388-3773

COLUMN DESIGN - AEP - C 6 x 3.5 10 GA

FLEXURE - CANTILEVER SPAN

STRONG DIRECTION

DISTORTIONAL BUCKLING STRENGTH

C3.1.4-12	L_{cr} =	23.1	in
	L_m =	136.7	in
	L =	MIN(L_m,L_{cr})	
	L =	23.11	in
C3.1.4-11	ß =	$1.0 \le 1+.4*(L/L_m)^{0.7}*(1-M_1/M_2)^{0.7} \le 1.3$	
	ß =	1.1	
C3.1.4-13	$k_{\Phi fe}$ =	4,092.99	lb
C3.1.4-14	$k_{\Phi we}$ =	3,558.66	lb
	k_{Φ} =	500.00	lb
C3.1.4-15	$k_{\Phi fg}$ =	0.07	in^2
C3.1.4-16	$k_{\Phi wg}$ =	0.0016	in^2
C3.1.4-6	F_d =	$ß*(k_{\Phi fe} + k_{\Phi we} + k_{\Phi})/(k_{\Phi fg} + k_{\Phi wg})$	
	F_d =	126,491.74	psi
C3.1.4-3	λ_d =	$\sqrt{(M_y/M_{crd})}$	
	λ_d =	0.66	
C3.1.4-1&2	M_n =	My	
	M_n =	16,406.0	ft-lb

GOVERNING CAPACITY - CANTILEVER SPAN

STRONG DIRECTION			WEAK DIRECTION		
M_n^- =	4,226.2	ft-lb	M_n =	4,560.4	ft-lb
M_n^-/Ω_b =	**2,530.7**	**ft-lb**	**M_n/Ω_b =**	**2,730.8**	**ft-lb**
$\Phi_b*M_n^-$ =	**3,803.57**	**ft-lb**	**Φ_b*M_n =**	**4,104.39**	**ft-lb**

4 S.T.E.L.
ENGINEERING, INC.

109 EAST ESCALONES
SAN CLEMENTE, CA 92672
PHONE (949) 388-9333
FAX (949) 388-3773

COLUMN DESIGN - AEP - C 6 x 3.5 10 GA

COMPRESSION

FLEXURAL BUCKLING STRENGTH

	Ω_c =	1.80				
	Φ_c =	0.85				
	F_e =	$\pi^2*E/(Kl/r)^2$		F_e =	$\sigma_t*\sigma_{ex}/(\sigma_t + \sigma_{ex})$	
	F_e =	6,141.51	psi	F_e =	5,821.95	psi
C4.1-4	λ_c =	$\sqrt{(F_y/F_e)}$				
	λ_c =	3.07				
C4.1-2	F_n =	$(0.658\wedge\lambda_c^2)*F_y$	FALSE			
C4.1-3	F_n =	$(0.877/\lambda_c^2)*F_y$	TRUE			
	F_n =	5,105.8	psi			

DISTORTIONAL BUCKLING STRENGTH

C4.2-13	L_{cr} =	$((6*\pi^4*h_o*(1-\mu^2)/t^3) * (I_{xf}*(x_o-h_x)^2+C_{wf}-I_{xyf}^2*(x_o-h_x)^2/I_{yf}))^{1/4}$	
	L_{cr} =	25.6	in
	L_m =	136.7	in
	L =	$MIN(L_m,L_{cr})$	
	L =	25.57	in
C3.1.4-13	$k_{\Phi fe}$ =	4,092.99	lb
C4.2-11	$k_{\Phi we}$ =	2,215.54	lb
	k_Φ =	500.00	lb
C3.1.4-15	$k_{\Phi fg}$ =	0.07	in^2
C4.2-12	$k_{\Phi wg}$ =	0.01	in^2
C4.2-10	F_d =	$(k_{\Phi fe} + k_{\Phi we} + k_\Phi)/(k_{\Phi fg} + k_{\Phi wg})$	
	F_d =	91,038.77	psi

4 S.T.E.L.
ENGINEERING, INC.

109 EAST ESCALONES
SAN CLEMENTE, CA 92672
PHONE (949) 388-9333
FAX (949) 388-3773

COLUMN DESIGN - AEP - C 6 x 3.5 10 GA

COMPRESSION

C4.1-1	P_n =	A_g*F_n	
	P_n =	9,650.20	lb
	P_n/Ω_c =	**5,361.22**	**lb**
	Φ_c*P_n =	**8,202.67**	**lb**
	P_{no} =	A_e*F_y	
	P_{no} =	99,693.00	lb
	P_{no}/Ω_c =	**55,385.00**	**lb**
	Φ_c*P_{no} =	**84,739.05**	**lb**

COMBINED LOADING

P_{Ex} =	π^2*E*I/(K*L)^2		P_{Ey} =	π^2*E*I/(K*L)^2	
P_{Ex} =	11,818,843	lb	P_{Ey} =	3,392,562	lb

4 S.T.E.L.
ENGINEERING, INC.

109 EAST ESCALONES
SAN CLEMENTE, CA 92672
PHONE (949) 388-9333
FAX (949) 388-3773

TOPOCK POND POWER BUILDING
17'-0" WIDE 2-POST STR. x 25'-0" O.C.

JOB #: 14-1195
11/18/2014

C&C MEMBERS AT 3'-9" o/c LOADING

W =	17.00	ft	ANGLE (A) =	9.46	DEGREES
TW =	3.75	ft	H =	8.00	ft

EFFECTIVE WIND AREA (EWA) = L*MAX(TW,L/3)

EWA =	30.00	ft^2	a =	3.00	ft

WIND LOADS 110 MPH

V =	110	mph	Risk =	II
Exposure =	C			

DUE TO SLOPED ROOF - C&C

$p = q_h*G*C_N$

$q_h = .00256*K_z*K_{zt}*K_d*V^2$

K_z =	0.850
K_{zt} =	1.0
K_d =	0.85
q_h =	22.38
G =	0.85

FOR STRONG DIRECTION LOADING

GC_{p+} =	0.93	GC_{pi+} =	0.00
GC_{p-} =	-1.27	GC_{pi-} =	0.00

p_{DN} =	$q_h*(GC_p - GC_{pi})$		p_{UP} =	$q_h*(GC_p - GC_{pi})$	
p_{DN} =	20.89	psf	p_{UP} =	-28.35	psf

4 S.T.E.L.
ENGINEERING, INC.

109 EAST ESCALONES
SAN CLEMENTE, CA 92672
PHONE (949) 388-9333
FAX (949) 388-3773

C&C MEMBERS AT 3'-9" o/c LOADING

SEISMIC LOADS - WEAK DIRECTION ONLY

F_p = $((.4*a_p*S_{DS}*W_p)/(R_p/I_p))*(1+(2*(z/h)))$

a_p =	1.00	
S_{DS} =	0.26	
I_p =	1.00	
R_p =	1.50	
z =	11.39	ft
h =	11.39	ft

F_p/W_p = $((.4*a_p*S_{DS})/(R_p/I_p))*(1+(2*z/h))$

F_p/W_p = 0.21

$F_{p\text{-}MAX}/W_p$ = $1.6*S_{DS}*I_p$

$F_{p\text{-}MAX}/W_p$ = 0.41

$F_{p\text{-}MIN}/W_p$ = $0.3*S_{DS}*I_p$

$F_{p\text{-}MIN}/W_p$ = 0.08

4 S.T.E.L.
ENGINEERING, INC.

109 EAST ESCALONES
SAN CLEMENTE, CA 92672
PHONE (949) 388-9333
FAX (949) 388-3773

TOPOCK POND POWER BUILDING
17'-0" WIDE 2-POST STR. x 25'-0" O.C.

JOB #: 14-1195
11/18/2014

Walls		*Fig. 30.4-2	Governing	
			GCp+	0.93
EWA =	30		*GCp-*	-1.27
**Assuming Zone 5				
Wall				
EWA≤10	GCp+	1		
	GCp-	-1.4	*GCp+*	0.93
EWA≥500	GCp+	0.7	*GCp-*	-1.3
	GCp-	-0.8		

This Wall in File: 14-1195 topock.RPX

RetainPro 10 (c) 1987-2014, Build 10.14.10.31
License : KW-06057520
License To : 4 S.T.E.L. ENGINEERING, INC.

Restrained Retaining Wall Design

Code: CBC 2013,ACI 318-11,ACI 530-11

Criteria

Retained Height	=	1.00 ft
Wall height above soil	=	8.00 ft
Total Wall Height	=	9.00 ft
Top Support Height	=	9.00 ft
Slope Behind Wall	=	0.00 : 1
Height of Soil over Toe	=	6.00 in
Water height over heel	=	0.0 ft

Soil Data

Allow Soil Bearing	=	1,500.0 psf
Equivalent Fluid Pressure Method		
Heel Active Pressure	=	32.0 psf/ft
	=	
Passive Pressure	=	250.0 psf/ft
Soil Density	=	110.00 pcf
Footing||Soil Frictior	=	0.400
Soil height to ignore for passive pressure	=	12.00 in

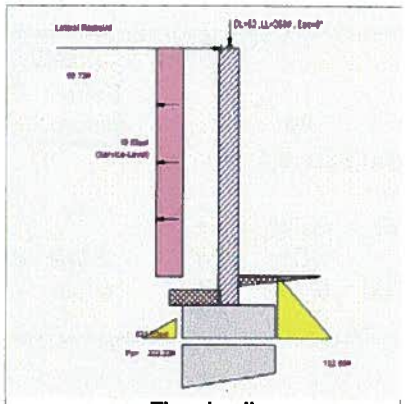

Thumbnail

Surcharge Loads

Surcharge Over Heel = 0.0 psf
>>>Used To Resist Sliding & Overturning
Surcharge Over Toe = 0.0 psf
Used for Sliding & Overturning

Axial Load Applied to Stem

Axial Dead Load	=	52.0 lbs
Axial Live Load	=	260.0 lbs
Axial Load Eccentricity	=	0.0 in

Uniform Lateral Load Applied to Stem

Lateral Load	=	0.0 #/ft
...Height to Top	=	0.00 ft
...Height to Bottom	=	0.00 ft
The above lateral load has been increased by a factor of		1.00
Wind on Exposed Stem	=	10.7 psf

Adjacent Footing Load

Adjacent Footing Load	=	0.0 lbs
Footing Width	=	0.00 ft
Eccentricity	=	0.00 in
Wall to Ftg CL Dist	=	0.00 ft
Footing Type		Line Load
Base Above/Below Soil at Back of Wall	=	0.0 ft
Poisson's Ratio	=	0.300

Earth Pressure Seismic Load

K_h Soil Density Multiplier = 0.200 g Added seismic per unit area = 0.0 psf

Stem Weight Seismic Load

F_p / W_p Weight Multiplier = 0.080 g Added seismic per unit area = 4.4 psf

Design Summary

Total Bearing Load	=	1,860 lbs	
...resultant ecc.	=	0.22 in	
Soil Pressure @ Toe	=	532 psf	OK
Soil Pressure @ Heel	=	532 psf	OK
Allowable	=	1,500 psf	
Soil Pressure Less Than Allowable			
ACI Factored @ Toe	=	689 psf	
ACI Factored @ Heel	=	646 psf	
Footing Shear @ Toe	=	4.5 psi	OK
Footing Shear @ Heel	=	3.2 psi	OK
Allowable	=	75.0 psi	
Reaction at Top	=	66.7 lbs	
Reaction at Bottom	=	132.5 lbs	
Sliding Stability Ratio	=	7.29	OK

Sliding Calcs (Vertical Component NOT Used)

Lateral Sliding Force	=	132.5 lbs	
less 100% Passive Force	= -	222.2 lbs	
less 100% Friction Force	= -	744.1 lbs	
Added Force Req'd	=	0.0 lbs	OK
....for 1.5 : 1 Stability	=	0.0 lbs	OK

Load Factors

Building Code	CBC 2013,ACI
Dead Load	1.200
Live Load	1.600
Earth, H	1.600
Wind, W	1.000
Seismic, E	1.000

Masonry Stem Construction

Thickness	=	8.00 in	f'm	=	1,500 psi	Short Term Factor	= 1.000
Wall Weight	=	78.0 psf	Fs	=	24,000 psi	Equiv. Solid Thick.	= 7.600 in
Stem is FREE to rotate at top of footing						n Ratio (Es/Em)	= 21.481
Block Type = Medium Weight							
Design Method = ASD							
Solid Grouted							

		@ Top Support	Mmax Between Top & Base	@ Base of Wall
		Stem OK	Stem OK	Stem OK
Design Height Above Ftg	=	9.00 ft	4.52 ft	0.00 ft
Rebar Size	=	# 5	# 5	# 5
Rebar Spacing	=	16.00 in	16.00 in	16.00 in
Rebar Placed at	=	Center	Center	Center
Rebar Depth 'd'	=	3.75 in	3.75 in	3.75 in
Design Data				
fb/FB + fa/Fa	=	0.000	0.100	0.000
Moment....Actua	=	0.0 ft-#	152.5 ft-#	0.0 ft-#
Moment.....Allowable	=	1,526.9 ft-#	1,526.9 ft-#	1,526.9 ft-#
Shear Force @ this height	=	68.3 lbs		73.4 lbs
Shear.....Actual	=	1.39 psi		1.50 psi
Shear.....Allowable	=	77.71 psi		77.71 psi

Other Acceptable Sizes & Spacings:

Toe: # 7 @ 16.00 in	-or-	Not req'd, Mu < S * Fr
Heel: # 6 @ 16.00 in	-or-	Not req'd, Mu < S * Fr
Key: Not Req'd = Mu<S*Fr	-or-	Not Req'd = Mu<S*Fr

This Wall in File: 14-1195 topock.RPX

RetainPro 10 (c) 1987-2014, Build 10.14.10.31
License : KW-06057520
License To : 4 S.T.E.L. ENGINEERING, INC.

Restrained Retaining Wall Design

Code: CBC 2013,ACI 318-11,ACI 530-11

Footing Strengths & Dimensions

Toe Width	=	1.42 ft
Heel Width	=	2.08
Total Footing Width	=	3.50
Footing Thickness	=	14.00 in
Key Width	=	12.00 in
Key Depth	=	0.00 in
Key Distance from Toe	=	2.00 ft

f'c = 2,500 psi Fy = 60,000 psi
Footing Concrete Density = 150.00 pcf
Min. As % = 0.0018
Cover @ Top = 2.00 in @ Btm.= 3.00 in

Footing Design Results

		Toe	Heel
Factored Pressure	=	689	646 psf
Mu' : Upward	=	855	818 ft-#
Mu' : Downward	=	346	429 ft-#
Mu: Design	=	509	-390 ft-#
Actual 1-Way Shear	=	4.54	3.21 psi
Allow 1-Way Shear	=	75.00	75.00 psi

Summary of Forces on Footing : Slab is NOT resisting sliding, stem is PINNED at footing

Forces acting on footing for overturning, sliding, & soil pressure

Overturning Moments...		Lateral lbs	Distance ft	Moment ft-#
Stem Shear @ Top of Footing	=	-73.4	1.17	-85.7
Heel Active Pressure	=	-59.1	0.51	-30.2
Sliding Force	=	**132.5**		
		Overturning Moment =		-115.9

Footing Overturning Stability Ratio **2,015.27**

Net Moment Used For Soil Pressure Calculations **34.3 ft-#**

Net Mom. at Stem/Ftg Interface = 34.3 ft-#

Allow. Mom. @ Stem/Ftg Interface = 1,526.9 ft-#

Allow. Mom. Exceeds Applied Mom.? Yes

Therefore Uniform Soil Pressure = 531.5 psf

Resisting Moments...		Vertical lbs	Lateral lbs	Distance ft	Moment ft-#
Surcharge Over Heel	=				
Adjacent Footing Load	=				
Axial Dead Load on Stem	=	312.0		1.75	546.0
Soil Over Toe	=	77.9		0.71	55.2
Stem Weight	=	702.0			
Surcharge Over Toe	=			1.75	1,228.5
Soil Over Heel	=	155.8		2.79	435.0
Footing Weight	=	612.5		1.75	1,072.4
Total Vertical Force	=	1,860.3 lbs			
		Resisting Moment =			3,337.1

4 S.T.E.L.
ENGINEERING, INC.

109 EAST ESCALONES
SAN CLEMENTE, CA 92672
PHONE (949) 388-9333
FAX (949) 388-3773

ELECTRICAL EQUIPMENT LOADS

POWERLINE GENERATOR
MODEL KS2300-T3 23 kWe

POWERLINE GENERATOR

USE (4) - 1/2" DIA. HILTI KB-TZ STAINLESS WITH 3.25" EMBEDMENT IN A 26" X 52" MIN RECTANGULAR PATTERN

PROPERTIES

Dead Load (DL) =	968.00	lb	Height (H) =	44.31	in
Anchor Width (AW) =	26.00	in	Width (W) =	32.00	in
Anchor Depth (AD) =	52.00	in	Depth (D) =	58.00	in

LOADS

WIND LOAD

V =	110	mph	Risk =	II
Exposure =	C			
h/D =	1.38			

$F = q_z*G*C_f*A_f$

$q_z = 0.00256*K_z*K_{zt}*K_d*V^2$

$K_z =$ 0.85

$K_{zt} =$ 1.00

$K_d =$ 0.85

$q_h =$ 22.38

$G =$ 0.85

$C_f =$ 1.31

$F =$ 24.85 psf $*A_f$

WIND IN X-X DIR

Wind Force (W) = F*H*D

W = 443.56 lb

WIND IN Y-Y DIR

Wind Force (W) = F*H*W

W = 244.72 lb

4 S.T.E.L.
ENGINEERING, INC.

109 EAST ESCALONES
SAN CLEMENTE, CA 92672
PHONE (949) 388-9333
FAX (949) 388-3773

ELECTRICAL EQUIPMENT LOADS

POWERLINE GENERATOR

SEISMIC LOAD

F_p =	$((.4*a_p*S_{DS}*W_p)/(R_p/I_p))*(1+(2*(z/h)))$	
a_p =	1.00	
S_{DS} =	0.26	
I_p =	1.00	
R_p =	2.50	
z	3.69	ft
h	3.69	ft
W_p =	DL	
W_p =	968.00	lb
F_p =	$((.4*a_p*S_{DS}*W_p)/(R_p/I_p))*(1+(2*(z/h)))$	
F_p =	119.50	lb
$F_{p\text{-}MAX}$ =	$1.6*S_{DS}*I_p*W_p$	
$F_{p\text{-}MAX}$ =	398.32	lb
$F_{p\text{-}MIN}$ =	$0.3*S_{DS}*I_p*W_p$	
$F_{p\text{-}MIN}$ =	74.69	lb
E =	**F_p**	
E =	**119.50**	**lb**

CHECK TENSION FOR LOAD IN X-X DIR.

USE	**1/2" DIA.**	HILTI KB-TZ	
$T_{ALLOWED}$ =	2,178.00	lb	PER ICC ESR-1917 TABLE 9
M =	MAX(0.6W OR 0.7E)*(H/2)		
M =	491.38	ft-lb	
M_{RESIST} =	0.6*DL*AW/2		
M_{RESIST} =	629.20	ft-lb	
$M_{OVERTURN}$ =	$M-M_{RESIST}$		
$M_{OVERTURN}$ =	0.00	ft-lb	
T = C =	(M/AW)/(n/2)		
T = C =	0.00	lb	**OK**

4 S.T.E.L.
ENGINEERING, INC.

109 EAST ESCALONES
SAN CLEMENTE, CA 92672
PHONE (949) 388-9333
FAX (949) 388-3773

ELECTRICAL EQUIPMENT LOADS

POWERLINE GENERATOR

CHECK SHEAR FOR LOAD IN X-X DIR.

$V_{ALLOWED}$ = 1,332.00 lb PER ICC ESR-1917 TABLE 10
#OF ANCHORS (n) = 4.00

$V_{PER\ ANCHOR}$ = MAX(0.6W OR 0.7E)/n
$V_{PER\ ANCHOR}$ = 66.53 lb **OK**

CHECK INTERACTION PER ICC ESR-1917 SECTION 4.2
$V_{PER\ ANCHOR}/V_{ALLOWED}$ = 0.05 FULL VALUE OF TENSION ALLOWED

$T/T_{ALLOW} + V_{PER\ ANCHOR}/V_{ALLOW}$ = 0.05 **< 1.2** **OK**

CHECK ANCHORAGE FOR LOAD IN Y-Y DIR.

$T_{ALLOWED}$ = 2,178.00 lb

M = MAX(0.6W OR 0.7E)*(H/2)
M = 271.11 ft-lb

M_{RESIST} = 0.6*DL*AD/2
M_{RESIST} = 1258.40 ft-lb

$M_{OVERTURN}$ = $M-M_{RESIST}$
$M_{OVERTURN}$ = 0.00 ft-lb

T = C = (M/AD)/(n/2)
T = C = 0.00 lb **OK**

CHECK SHEAR FOR LOAD IN Y-Y DIR.

$V_{ALLOWED}$ = 1,332.00 lb PER ICC ESR-1917 TABLE 10
#OF ANCHORS (n) = 4.00

$V_{PER\ ANCHOR}$ = MAX(0.6W OR 0.7E)/n
$V_{PER\ ANCHOR}$ = 36.71 lb **OK**

CHECK INTERACTION PER ICC ESR-1917 SECTION 4.2
$V_{PER\ ANCHOR}/V_{ALLOWED}$ = 0.03 FULL VALUE OF TENSION ALLOWED

$T/T_{ALLOW} + V_{PER\ ANCHOR}/V_{ALLOW}$ = 0.03 **< 1.2** **OK**

USE (4) - 1/2" DIA. HILTI KB-TZ STAINLESS WITH 3.25" EMBEDMENT IN A 26" X 52" MIN RECTANGULAR PATTERN

4 S.T.E.L.
ENGINEERING, INC.

109 EAST ESCALONES
SAN CLEMENTE, CA 92672
PHONE (949) 388-9333
FAX (949) 388-3773

TOPOCK POND POWER BUILDING
17'-0" WIDE 2-POST STR. x 25'-4" O.C.

JOB #: 14-1195
11/25/2014

SPREAD FOOTING - POWERLINE GENERATOR

BEARING =	1500	psf	D+L	(ASD)
PASSIVE =	100	pcf		
μ =	0.25			
h' =	0	in	(DEPTH OF SOIL TO IGNORE FOR SLIDING RESISTANCE)	
MAX PASSIVE =	2000	psf		
h_o =	(MAX PASSIVE)/PASSIVE			
h_o =	240.0	in	(DEPTH AT MAX PASSIVE VALUE)	

APPLIED LOADS

X-X DIRECTION			Y-Y DIRECTION		
D + (0.6W OR 0.7*E)			D + (0.6W OR 0.7*E)		
P_a =	968.0	lb	P_a =	968.0	lb
M_a =	491.4	lb-ft	M_a =	271.1	lb-ft
V_a =	266.1	lb	V_a =	146.8	lb
0.6*D + (0.6W OR 0.7*E)			0.6*D + (0.6*W OR 0.7*E)		
P_a =	580.8	lb	P_a =	580.8	lb
M_a =	491.4	lb-ft	M_a =	271.1	lb-ft
V_a =	266.1	lb	V_a =	146.8	lb

FOOTING DIMENSIONS			OK FOR BEARING	OK FOR SLIDING
B =	3.67	ft		
L =	5.83	ft	(PARALLEL TO BEAM SPAN DIRECTION)	
h (DEPTH) =	6	in		
I_x =	$B*L^3/12$		I_y =	$L*B^3/12$
I_x =	60.65	ft^4	I_y =	23.96 ft^4
A =	B*L			
A =	21.39	ft^2		
WEIGHT =	γ_c*B*L*h			
WEIGHT =	1,604.2	lb		

SPREAD FOOTING - POWERLINE GENERATOR

3'-8" x 5'-10" x 6" DEEP W/ #4 @ 12" O.C. EACH WAY AT MID-DEPTH

4 S.T.E.L.
ENGINEERING, INC.

109 EAST ESCALONES
SAN CLEMENTE, CA 92672
PHONE (949) 388-9333
FAX (949) 388-3773

TOPOCK POND POWER BUILDING
17'-0" WIDE 2-POST STR. x 25'-4" O.C.

JOB #: 14-1195
11/25/2014

SPREAD FOOTING - POWERLINE GENERATOR

LOADS APPLIED TO FOOTING

X-X DIRECTION

D + (W OR 0.7*E)

P =	P_a + WEIGHT	
P =	2,572.2	lb
M =	$M_a + V_a$*h	
M =	624.5	lb-ft
e =	M/P	
e =	0.24	ft
	IN KERN	

CHECK BEARING

q_{MAX} =	P/A + M*(L/2)/I_x	
q_{MAX} =	150.29	psf
q_{MIN} =	P/A - M*(L/2)/I_x	
q_{MIN} =	90.23	psf
x =	(3*L/2) - (3*M/P)	
x =	8.02	ft
q_{MAX} =	2*P/(x*B)	
q_{MAX} =	174.90	psf
BEARING CHECK:	**OK**	

0.6*D + (W OR 0.7*E)

P =	P_a + 0.6*WEIGHT	
P =	1,543.3	lb
M =	$M_a + V_a$*h	
M =	624.5	lb-ft
e =	M/P	
e =	0.40	ft
	IN KERN	

Y-Y DIRECTION

D + (W OR 0.7*E)

P =	P_a + WEIGHT	
P =	2,572.2	lb
M =	$M_a + V_a$*h	
M =	344.5	lb-ft
e =	M/P	
e =	0.13	ft
	IN KERN	

CHECK BEARING

q_{MAX} =	P/A + M*(L/2)/I_x	
q_{MAX} =	136.83	psf
q_{MIN} =	P/A - M*(L/2)/I_x	
q_{MIN} =	103.69	psf
x =	(3*L/2) - (3*M/P)	
x =	8.35	ft
q_{MAX} =	2*P/(x*B)	
q_{MAX} =	168.06	psf
BEARING CHECK:	**OK**	

0.6*D + (W OR 0.7*E)

P =	P_a + 0.6*WEIGHT	
P =	1,543.3	lb
M =	$M_a + V_a$*h	
M =	344.5	lb-ft
e =	M/P	
e =	0.22	ft
	IN KERN	

4 S.T.E.L.
ENGINEERING, INC.

109 EAST ESCALONES
SAN CLEMENTE, CA 92672
PHONE (949) 388-9333
FAX (949) 388-3773

TOPOCK POND POWER BUILDING
17'-0" WIDE 2-POST STR. x 25'-4" O.C.

JOB #: 14-1195
11/25/2014

SPREAD FOOTING - POWERLINE GENERATOR

LOADS APPLIED TO FOOTING

CHECK BEARING

q_{MAX} =	P/A + M*(L/2)/I_x	
q_{MAX} =	102.18	psf
q_{MIN} =	P/A - M*(L/2)/I_x	
q_{MIN} =	42.12	psf
x =	(3*L/2) - (3*M/P)	
x =	7.54	ft
q_{MAX} =	2*P/(x*B)	
q_{MAX} =	111.70	psf
BEARING CHECK:	**OK**	

CHECK BEARING

q_{MAX} =	P/A + M*(B/2)/I_y	
q_{MAX} =	98.51	psf
q_{MIN} =	P/A - M*(B/2)/I_y	
q_{MIN} =	45.80	psf
x =	(3*B/2) - (3*M/P)	
x =	4.83	ft
q_{MAX} =	2*P/(x*L)	
q_{MAX} =	109.54	psf
BEARING CHECK:	**OK**	

CHECK SLIDING

q_{MAX} =	PASSIVE*MAX(h,12") ≤ MAX P/	
q_{MAX} =	100	psf
q_{MIN} =	PASSIVE*h'	
q_{MIN} =	0	psf

X-X DIRECTION

V_a =	266.1	lb
P =	P_a + 0.6*WEIGHT	
P =	1,543.3	lb
Q_{p1} =	B*(h - h')*(q_{MAX} + q_{MIN})/2	
Q_{p1} =	1,100.0	lb
Q_{p2} =	q_{MAX}*B*MAX(0,h-h_o)	
Q_{p2} =	0.0	
Q_f =	P*μ	
Q_f =	385.8	lb
Q =	Q_{p1} + Q_{p2} + Q_f	
Q =	1,485.8	lb
SLIDING CHECK:	**OK**	

Y-Y DIRECTION

V_a =	146.8	lb
P =	P_a + 0.6*WEIGHT	
P =	1,543.3	lb
Q_{p1} =	L*(h - h')*(q_{MAX} + q_{MIN})/2	
Q_{p1} =	1,750.0	lb
Q_{p2} =	q_{MAX}*L*MAX(0,h-h_o)	
Q_{p2} =	0.0	
Q_f =	P*μ	
Q_f =	385.8	lb
Q =	Q_{p1} + Q_{p2} + Q_f	
Q =	2,135.8	lb
SLIDING CHECK:	**OK**	

4 S.T.E.L. ENGINEERING, INC.

109 EAST ESCALONES
SAN CLEMENTE, CA 92672
PHONE (949) 388-9333
FAX (949) 388-3773

SPREAD FOOTING - POWERLINE GENERATOR

CONCRETE DESIGN

	M_{MAX} =	$(5*q_{MAX}+q_{MIN})*B*L^2/48$ (IN KERN) OR $(q_{MAX}*B*L^2/48)*(6-L/x)$ (OUTSIDE KERN)		
	M_{MAX} =	2,187.8	ft-lb	(X-X DIRECTION)
	M_{MAX} =	1,437.5	ft-lb	(Y-Y DIRECTION)

FOOTING INFO

CI 318-I	f_y =	60,000	psi
	E_s =	29,000,000	psi
	f'_c =	2,500	psi
10.2.7.3	β_1 =	0.85	
7.7.1	c_c =	3.0	in
	b =	44.0	in
	L =	70.0	in
	h =	6.0	in

FLEXURE - X-X DIRECTION

LF =	1.6	(CONVERT ASD TO LRFD)			
M_u^+ =	3,500.4	ft-lb	(LRFD)		
M_u^- =	0.0	ft-lb	(LRFD)		
n =	4	#4	BARS	AT MID-DEPTH	
D_s =	0.5	in			
A_s =	0.8	in^2	d =	3.00	in
A_s' =	0	in^2	d' =	0	in

MINIMUM STEEL REQUIREMENTS

7.6.1	b_{REQ} =	$2*c_c + n*D_s + (n-1)*MAX(D_s,1)$		
	b_{REQ} =	11	in	**OK**
	s_{REQ} =	MIN(18,3*h)		
	s_{REQ} =	18	in	
	ρ =	$A_s/(L*h)$		
	ρ =	0.00190	≥ 0.0018	**OK**
	s =	12.50	in o.c.	**OK**

4 S.T.E.L.
ENGINEERING, INC.

109 EAST ESCALONES
SAN CLEMENTE, CA 92672
PHONE (949) 388-9333
FAX (949) 388-3773

SPREAD FOOTING - POWERLINE GENERATOR

FLEXURE - X-X DIRECTION

SOLVE FOR c USING QUADRATIC FORMULA

A =	$0.85*f'_c*\beta_1*b$				
A =	79,475				
B =	$(-A_s*f_y + 0.003*A_s'*E_s)$				
B =	-48,000				
C =	$-0.003*A'_s*E_s*d'$				
C =	0				
c =	$(-B + \sqrt{(B^2 - 4*A*C)})/(2*A)$		ε_s' =	$0.003*(c-d')/c$	
c =	0.604	in	ε_s' =	0.00300	
c/d =	0.201	≤ .375	a =	$c*\beta_1$	
Φ =	0.9		a =	0.513	in
$\Phi*M_n$ =	$\Phi*(0.85*f'_c*a*b*(d-a/2) + E_s*\varepsilon'_s*A'_s*(d-d'))$				
$\Phi*M_n$ =	9,875.9	ft-lb	**OK**		

FLEXURE - Y-Y DIRECTION

LF =	1.6	(CONVERT ASD TO LRFD)			
M_u^+ =	2,300.1	ft-lb	(LRFD)		
M_u^- =	0.0	ft-lb	(LRFD)		
n =	5	#4	BARS	AT MID-DEPTH	
D_s =	0.5000	in			
A_s =	1	in^2	d =	3.00	in
A_s' =	0	in^2	d' =	0	in

MINIMUM STEEL REQUIREMENTS

7.6.1	L_{REQ} =	$2*c_c + n*D_s + (n-1)*MAX(D_s,1)$			
	L_{REQ} =	12.5	in	**OK**	
	s_{REQ} =	MIN(18,3*h)			
	s_{REQ} =	18	in		
	ρ =	$A_s/(b*h)$			
	ρ =	0.00379	≥ 0.0018	**OK**	
	s =	15.88	in o.c.	**OK**	

4 S.T.E.L. ENGINEERING, INC.

109 EAST ESCALONES
SAN CLEMENTE, CA 92672
PHONE (949) 388-9333
FAX (949) 388-3773

SPREAD FOOTING - POWERLINE GENERATOR

FLEXURE - Y-Y DIRECTION

SOLVE FOR c USING QUADRATIC FORMULA

A =	$0.85*f'_c*\beta_1*L$				
A =	126,438				
B =	$(-A_s*f_y + 0.003*A_s'*E_s)$				
B =	-60,000				
C =	$-0.003*A'_s*E_s*d'$				
C =	0				
c =	$(-B + \sqrt{(B^2 - 4*A*C)})/(2*A)$		ε_s' =	$0.003*(c-d')/c$	
c =	0.475	in	ε_s' =	0.00300	
c/d =	0.158	≤ .375	a =	$c*\beta_1$	
Φ =	0.9		a =	0.403	in
$\Phi*M_n$ =	$\Phi*(0.85*f'_c*a*b*(d-a/2) + E_s*\varepsilon'_s*A'_s*(d-d'))$				
$\Phi*M_n$ =	12,592.4	ft-lb	**OK**		

PUNCHING SHEAR

	LF =	1.6	(CONVERT ASD TO LRFD)		
	P =	968.0	lb		
	$P_u = P*LF$ =	1,548.8	lb		
	D_{EQUIP} =	58.0	in		
	W_{EQUIP} =	32.0	in		
	d =	3.0	in		
CI 318-08					
1.11.1.	b_o =	$2*(D_{EQUIP}+d) + 2*(W_{EQUIP}+d)$			
	b_o =	192.0	in		
	β =	D_{EQUIP}/W_{EQUIP} OR W_{EQUIP}/D_{EQUIP}			
	β =	0.55			
	α_s =	40	(Int. Col: 40; Edge Col: 30; Corner Col: 20)		
Q. 11-3	V_c =	$(2+(4/\beta))*\lambda*\sqrt{(f'_c)}*b_o*d$ =		266,400.0	lb
Q. 11-32		$((\alpha_s*d/b_o)+2)*\lambda*\sqrt{(f'_c)}*b_o*d$ =		75,600.0	lb
Q. 11-33		$4*\lambda*\sqrt{(f'_c)}*b_o*d$ =		115,200.0	lb
1.11.2.1		Governing = min:	V_c =	75,600.0	lb
	Φ =	0.75			
	$\Phi*V_c$ =	56,700.0	lb	**OK**	

CALCULATIONS

TEG LOAD LIST

Load Tag	QTY	Load (W)	Sub	Power Factor	Load VA
					210.526315
PSPRO-AC-8, 200W	1	200	200	0.95	8
POND LIGHT 1&2, 120W	2	120	240	1	240
POND LIGHT 3&4, 120W	2	120	240	1	240
BUILDING LIGHT	1	150	150	1	150
FLOOD LIGHT 120W POND 1&2	2	120	240	1	240
FLOOD LIGHT 120W POND 3&4	2	120	240	1	240
VALVE ACTUATORS POND 1,2 ,3 &4	4	48	192	0.8	240
ROSEMOUNT 3490	N/A	N/A	N/A	N/A	10
ROSEMOUNT 3101	N/A	N/A	N/A	N/A	10
SCADA	N/A	N/A	N/A	N/A	N/A
TOTAL					***1580 VA***

TEG POWER CURVE

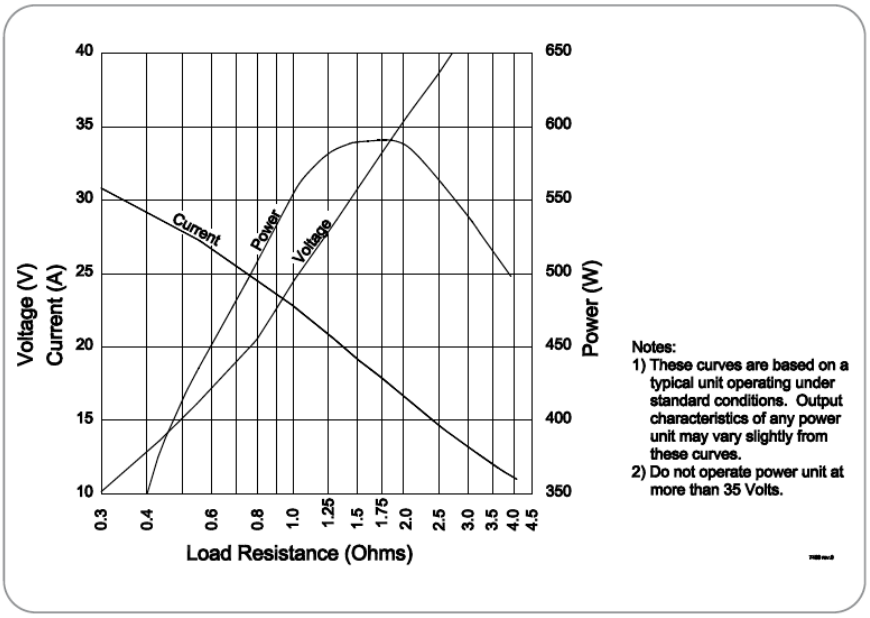

Figure 3 Gross Power Unit Electrical Output Characteristics at 20°C, Beginning of Life (without Power Conditioner)

$Assume\ 525\ Watts\ at\ 24\ V\ for\ site\ conditions$

TEG QUANTITY

$$Maximum\ coincident\ demand = 1580\ VA$$

$$Transformer\ Efficiency = 0.85$$

$$Power\ Factor = 1$$

$$P_{(W)} = S_{(VA)} \times PF = 1580\ VA \times 1 = 1580\ W$$

$$\frac{1580W}{0.85} = 1858\ W\ \leftarrow minimum\ capacity\ generator\ for\ loads$$

$$Minimum\ Number\ of\ TEG's = \frac{1858\ W}{525\ W} = 3.54\ \approx 4\ TEG's\ Required$$

Supplemental Pre-Final (90%) Design Submittal
PG&E Topock Compressor Station
Needles, California

Park Moabi Construction Headquarters
Yard Piping Head Loss and Tank Sizing Calculations

02/02/2015

Prepared for:

Pacific Gas and Electric Company

Reviewed by:

Brad Hitts, P.E.
Design Engineer
ARCADIS U.S., Inc.

Prepared by:

Caroline Eckel, P.E.
Design Engineer
ARCADIS U.S., Inc

Pipe network

to	Branch size	Length	Branch size	Length	Branch size	Length	Load		Velocity	psi loss/100 ft	psi loss
Lab	2	32	2	56	2	8	20	gpm	2.23	0.46	0.4416
Header	3	80	3	224			70		3.49	0.65	1.976
Office Trailer	1.5	56					18	gpm	3.75	1.62	0.9072
Decontamination Pad	1.25	96	1.25	8	1.25	8	8	gpm	2.6	1	1.12
Restrooms	2.5	56	2.5	8	2.5	8	44	gpm	3.51	0.86	0.6192
											5.064

Daily usage Calculations

I found several standard numbers for daily usage
Students in a school with cafeteria, gym and showers = 15 gal/day
General office Building = 35 gal/day
Office Building = 25 gal/day
Factory = 25 gal/day

I also took the gallons/use for running a sink (washing hands, getting a drink, coffee etc.), using the toilet, both low flow and standard, and taking a shower, and used these values to see a range of daily use.

		Minimum gallons (low flow options) Per use	Maximum gallons Per use
	sink	1	1
	Toilet	1.6	5
	Shower	7	7
Assumed use per person per day (gallons)	5 sinks	5	5
	3 toilet	4.8	15
	1 shower	7	7
	Total	16.8	27

		construction	post construction
People on site		100	25
Min gal/day	17	1700	425
max gal/day	27	2700	675
Min gal/week		8500	2125
Max gal/week		13500	3375

(5 days)

Min gal/month	34000	8500
Max gal/month	54000	13500

(20 days)

sewage

Min		
141.6667	gallons per building	675
0.09838	gallons per min	0.46875
566.6667		2700
0.393519		1.875

From these numbers I recommend we use the following…

Recommend 2 - 5,000 gallon water storage tanks
removing one from service after construction is complete

Recommend 2 - 7,500 gallon sewage storage tanks
Or 2 - 10,000 gallon sewage storage tanks
emptying twice as often (twice a month) during construction
emptying once a month post construction

Supplemental Pre-Final (90%) Design Submittal
PG&E Topock Compressor Station
Needles, California

Park Moabi Construction Headquarters
Structural Calculations

02/02/2015

Prepared for:

Pacific Gas and Electric Company

Reviewed by:

Lawrence Tabat, P.E.
Principal Structural Engineer
ARCADIS U.S., Inc.

Prepared by:

Matt Lotycz, P.E.
Project Structural Engineer
ARCADIS U.S., Inc

ARCADIS

SUBJECT: PG&E – TOPOK
ARCADIS STRUCTURAL CALCULATIONS

JOB NO:

BY: MSL DATE: 6/18/14
CHKD: MSL DATE: 12/8/14

PAGE

SHEET 1

PG&E TOPOK
ARCADIS STRUCTURAL CALCULATIONS

A – GENERAL SITE LOCATION & CODE INFORMATION

B – HQ PARKING CANOPY STRUCTURE

C – IRZ CARBON SUBSTRATE & TW-BENCH STORAGE TANK FOUNDATION

D – IRZ UNLOADING PAD

E – MW-20 BENCH CARBON AMENDMENT BUILDING (PRE-ENGINEERED STEEL BLDG)

F – WELL VAULT – TOP SLAB DESIGN

G – HQ DECON PAD

H – UTILITY PAD

I – WORKSHOP BUILDING

ARCADIS
1100 Superior Suite 1250
Cleveland, OH

JOB TITLE Topok
Parking Canopy Structure
JOB NO.
SHEET NO.
CALCULATED BY CMW
DATE 11.24.14
CHECKED BY MSL
DATE 12/23/14

CS12 Ver 2012.03.10
www.struware.com

STRUCTURAL CALCULATIONS

FOR

Topok

~~San Francisco~~, CA
Needles

ARCADIS
1100 Superior Suite 1250
Cleveland, OH
Phone

Code Search

Code: International Building Code 2012

Occupancy:

Occupancy Group = U Utility & Miscellaneous

Risk Category & Importance Factors:

Risk Category = II ✓

Wind factor = 1.00
Snow factor = 1.00 ✓
Seismic factor = 1.00

Type of Construction:

Fire Rating:

Roof = 0.0 hr
Floor = 0.0 hr

Building Geometry:

Roof angle (θ)	0.25 / 12 ✓	1.2 deg ✓
Building length (L)	116.0 ft ✓	
Least width (B)	18.0 ft ✓	
Mean Roof Ht (h)	11.3 ft	
Parapet ht above grd	0.0 ft	
Minimum parapet ht	0.0 ft	

Live Loads:

Roof

0 to 200 sf: 20 psf ✓
200 to 600 sf: 24 - 0.02Area, but not less than 12 psf
over 600 sf: 12 psf

Floor:

Typical Floor	50 psf
Partitions	15 psf
Corridors above first floor	80 psf
Lobbies & first floor corridors	100 psf
Balconies (exterior)	50 psf

ARCADIS
1100 Superior Suite 1250
Cleveland, OH
Phone

JOB TITLE Topok
Parking Canopy Structure
JOB NO. SHEET NO. B3
CALCULATED BY CMW DATE 11.24.14
CHECKED BY MSL DATE 12/23/14

Wind Loads :

Ultimate Wind Speed	110 mph ✓
Directionality (Kd)	0.85 ✓
Exposure Category	C ✓
Enclosure Classif.	Open Building ✓
Internal pressure	+/-0.00
Kh case 1	0.849
Kh case 2	0.849 ✓
Type of roof	Gable

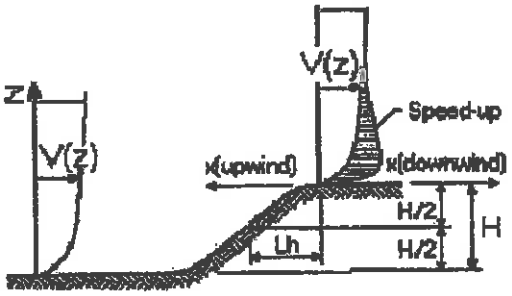

ESCARPMENT

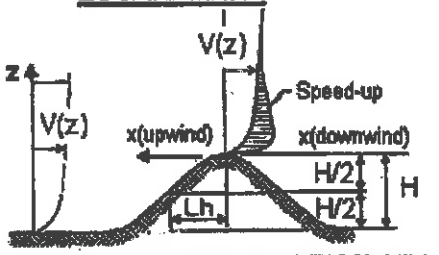

2D RIDGE or 3D AXISYMMETRICAL HILL

Topographic Factor (Kzt)

Topography		Flat
Hill Height	(H)	80.0 ft
Half Hill Length (Lh)		100.0 ft
Actual H/Lh	=	0.80
Use H/Lh	=	0.50
Modified Lh	=	160.0 ft
From top of crest: x =		50.0 ft
Bldg up/down wind?		downwind

H/Lh= 0.50	K_1 =	0.000
x/Lh = 0.31	K_2 =	0.792
z/Lh = 0.09	K_3 =	1.000

At Mean Roof Ht:

$Kzt = (1+K_1K_2K_3)^2$ = 1.00 ✓

Gust Effect Factor

h =	11.3 ft
B =	18.0 ft
/z (0.6h) =	15.0 ft

Flexible structure if natural frequency < 1 Hz (T > 1 second).
However, if building h/B < 4 then probably rigid structure (rule of thumb).
h/B = 0.63 Rigid structure

G = 0.85 Using rigid structure default ✓

Rigid Structure

ē =	0.20	
ℓ =	500 ft	
z_{min} =	15 ft	
c =	0.20	
g_Q, g_v =	3.4	
L_z =	427.1 ft	
Q =	0.95	
I_z =	0.23	
G =	0.90	use G = 0.85

Flexible or Dynamically Sensitive Structure

Natural Frequency (η_1) =	0.0 Hz				
Damping ratio (β) =	0				
/b =	0.65				
/α =	0.15				
Vz =	92.9				
N_1 =	0.00				
K_n =	0.000				
R_h =	28.282	η =	0.000	h =	11.3 ft
R_B =	28.282	η =	0.000		
R_L =	28.282	η =	0.000		
g_R =	0.000				
R =	0.000				
G =	0.000				

ARCADIS
1100 Superior Suite 1250
Cleveland, OH
Phone

JOB TITLE Topok
Parking Canopy Structure
JOB NO. SHEET NO. B4
CALCULATED BY CMW DATE 11.24.14
CHECKED BY MSL DATE 12/23/14

Enclosure Classification

Test for Enclosed Building: A building that does not qualify as open or partially enclosed.

Test for Open Building: All walls are at least 80% open. ✓
Ao ≥ 0.8Ag

Test for Partially Enclosed Building:

	Input			Test	
Ao	0.0	sf	Ao ≥ 1.1Aoi	YES	
Ag	0.0	sf	Ao > 4' or 0.01Ag	NO	
Aoi	0.0	sf	Aoi / Agi ≤ 0.20	NO	Building is NOT Partially Enclosed ✓
Agi	0.0	sf			

Conditions to qualify as Partially Enclosed Building. Must satisfy all of the following:
Ao ≥ 1.1Aoi
Ao > smaller of 4' or 0.01 Ag
Aoi / Agi ≤ 0.20
Where:
Ao = the total area of openings in a wall that receives positive external pressure.
Ag = the gross area of that wall in which Ao is identified.
Aoi = the sum of the areas of openings in the building envelope (walls and roof) not including Ao.
Agi = the sum of the gross surface areas of the building envelope (walls and roof) not including Ag.

Reduction Factor for large volume partially enclosed buildings (Ri) :

If the partially enclosed building contains a single room that is unpartitioned , the internal pressure coefficient may be multiplied by the reduction factor Ri.

Total area of all wall & roof openings (Aog): 0 sf
Unpartitioned internal volume (Vi) : 0 cf
Ri = 1.00

Altitude adjustment to constant 0.00256 (caution - see code) :

Altitude = 0 feet
Constant = 0.00256
Average Air Density = 0.0765 lbm/ft^3

ARCADIS
1100 Superior Suite 1250
Cleveland, OH
Phone

JOB TITLE Topok
Parking Canopy Structure
JOB NO.
SHEET NO. B5
CALCULATED BY CMW
DATE 11.24.14
CHECKED BY MSL
DATE 12/23/14

Wind Loads - Open Buildings: 0.25 ≤ h/L ≤ 1.0

Ultimate Wind Pressures

Type of roof = Monoslope Free Roofs
Wind Flow = Obstructed

G = 0.85
Roof Angle = 1.2 deg

Main Wind Force Resisting System

Kz = Kh (case 2) = 0.85

NOTE: The code requires the MWFRS be designed for a minimum pressure of 16 psf.

Base pressure (qh) = 22.4 psf

Roof pressures - Wind Normal to Ridge

Wind Flow	Load Case		Wind Direction γ = 0 & 180 deg	
			Cnw	Cnl
Obstructed Wind Flow	A	Cn =	-0.50	-1.20
		p =	-9.5 psf	-22.8 psf
	B	Cn =	-1.10	-0.60
		p =	-20.9 psf	-11.4 psf

NOTE: 1). Cnw and Cnl denote combined pressures from top and bottom roof surfaces.
2). Cnw is pressure on windward half of roof. Cnl is pressure on leeward half of roof.
3). Positive pressures act toward the roof. Negative pressures act away from the roof.

Roof pressures - Wind Parallel to Ridge, γ = 90 deg

Wind Flow	Load Case		Horizontal Distance from Windward Edge		
			≤ h	>h ≤ 2h	> 2h
Obstructed Wind Flow	A	Cn =	-1.20	-0.90	-0.60
		p =	-22.8 psf	-17.1 psf	-11.4 psf
	B	Cn =	0.50	0.50	0.30
		p =	9.5 psf	9.5 psf	5.7 psf

h = 11.3 ft
2h = 22.5 ft

Fascia Panels -Horizontal pressures

qp = 22.4 psf

Windward fascia: 33.5 psf (GCpn = +1.5)
Leeward fascia: -22.4 psf (GCpn = -1.0)

Components & Cladding - roof pressures

Kz = Kh (case 1) = 0.85
Base pressure (qh) = 22.4 psf
G = 0.85

a = 3.0 ft

a^2 = 9.0 sf
$4a^2$ = 36.0 sf

	Effective Wind Area	Obstructed Wind Flow					
		zone 3		zone 2		zone 1	
		positive	negative	positive	negative	positive	negative
C_N	≤ 9 sf	1.10	-3.84	0.86	-1.93	0.55	-1.28
	>9, ≤ 36 sf	0.86	-1.93	0.86	-1.93	0.55	-1.28
	> 36 sf	0.55	-1.28	0.55	-1.28	0.55	-1.28
Wind pressure	≤ 9 sf	20.8 psf	-72.9 psf	16.4 psf	-36.6 psf	10.4 psf	-24.3 psf
	>9, ≤ 36 sf	16.4 psf	-36.6 psf	16.4 psf	-36.6 psf	10.4 psf	-24.3 psf
	> 36 sf	10.4 psf	-24.3 psf	10.4 psf	-24.3 psf	10.4 psf	-24.3 psf

The C&C pressure shall not be less than 16 psf acting in either direction normal to the surface.

ARCADIS
1100 Superior Suite 1250
Cleveland, OH
Phone

JOB TITLE Topok
Parking Canopy Structure
JOB NO.
SHEET NO. B-5A
CALCULATED BY CMW
DATE 11.24.14
CHECKED BY MSL
DATE 12/8/14
12/23/14

Wind Loads - Open Buildings: 0.25 ≤ h/L ≤ 1.0

Ultimate Wind Pressures

Type of roof = Monoslope Free Roofs
Wind Flow = Clear

G = 0.85
Roof Angle = 1.2 deg

NOTE: The code requires the MWFRS be designed for a minimum pressure of 16 psf.

Main Wind Force Resisting System

Kz = Kh (case 2) = 0.85

Base pressure (qh) = **22.4 psf**

Roof pressures - Wind Normal to Ridge

Wind Flow	Load Case		Wind Direction γ = 0 & 180 deg	
			Cnw	Cnl
Clear Wind Flow	A	Cn =	1.20	0.30
		p =	22.8 psf	5.7 psf
	B	Cn =	-1.10	-0.10
		p =	-20.9 psf	-1.9 psf

NOTE: 1). Cnw and Cnl denote combined pressures from top and bottom roof surfaces.
2). Cnw is pressure on windward half of roof. Cnl is pressure on leeward half of roof.
3). Positive pressures act toward the roof. Negative pressures act away from the roof.

Roof pressures - Wind Parallel to Ridge, γ = 90 deg

Wind Flow	Load Case		Horizontal Distance from Windward Edge		
			≤ h	>h ≤ 2h	> 2h
Clear Wind Flow	A	Cn =	-0.80	-0.60	-0.30
		p =	-15.2 psf	-11.4 psf	-5.7 psf
	B	Cn =	0.80	0.50	0.30
		p =	15.2 psf	9.5 psf	5.7 psf

h = 11.3 ft
2h = 22.5 ft

Fascia Panels -Horizontal pressures

qp = 22.4 psf

Windward fascia: 33.5 psf (GCpn = +1.5)
Leeward fascia: -22.4 psf (GCpn = -1.0)

Components & Cladding - roof pressures

Kz = Kh (case 1) = 0.85
Base pressure (qh) = **22.4 psf**
G = 0.85

a = 3.0 ft

a^2 = 9.0 sf
$4a^2$ = 36.0 sf

	Effective Wind Area	Clear Wind Flow					
		zone 3		zone 2		zone 1	
		positive	negative	positive	negative	positive	negative
C_N	≤ 9 sf	2.53	-3.44	1.90	-1.76	1.26	-1.15
	>9, ≤ 36 sf	1.90	-1.76	1.90	-1.76	1.26	-1.15
	> 36 sf	1.26	-1.15	1.26	-1.15	1.26	-1.15
Wind pressure	≤ 9 sf	48.0 psf	-65.4 psf	36.0 psf	-33.5 psf	24.0 psf	-21.8 psf
	>9, ≤ 36 sf	36.0 psf	-33.5 psf	36.0 psf	-33.5 psf	24.0 psf	-21.8 psf
	> 36 sf	24.0 psf	-21.8 psf	24.0 psf	-21.8 psf	24.0 psf	-21.8 psf

ARCADIS
1100 Superior Suite 1250
Cleveland, OH
Phone

JOB TITLE Topok
Parking Canopy Structure
JOB NO.
SHEET NO. B4
CALCULATED BY CMW
DATE 11.24.14
CHECKED BY MSL
DATE 12/23/14

Location of Wind Pressure Zones

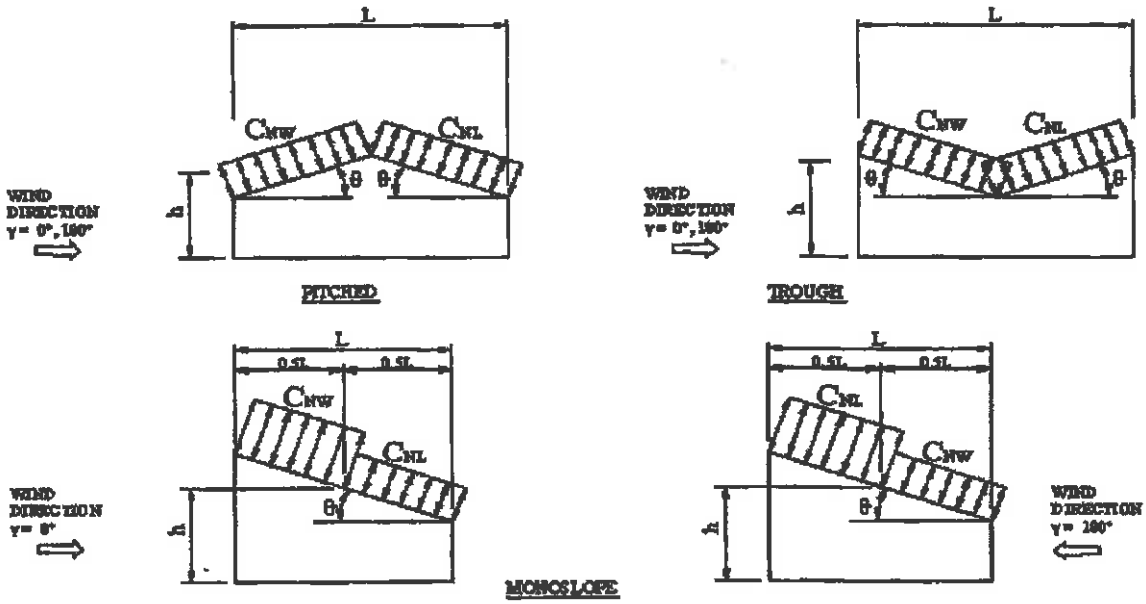

WIND DIRECTION γ = 0°, 180°

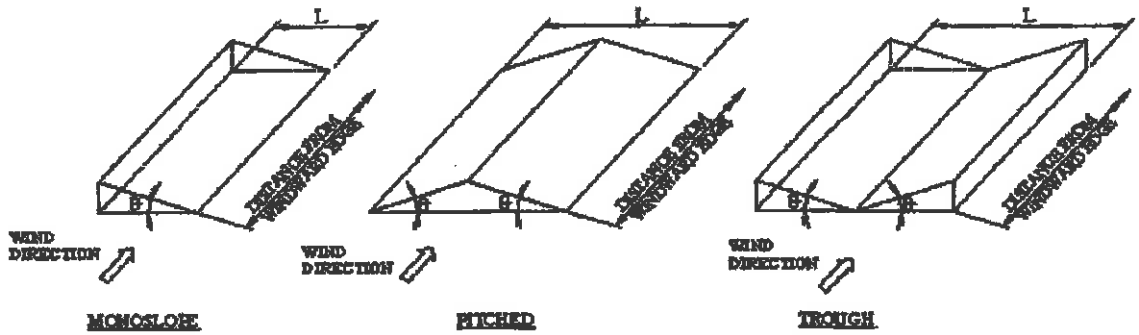

WIND DIRECTION γ = 90°

MAIN WIND FORCE RESISTING SYSTEM

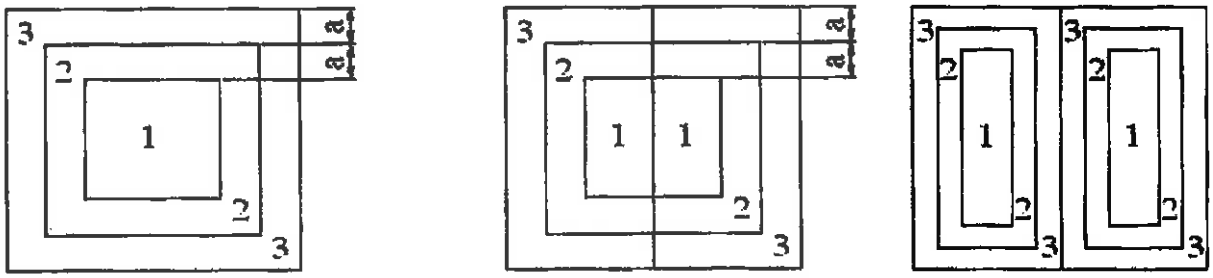

MONOSLOPE

PITCHED OR TROUGHED ROOF

COMPONENTS AND CLADDING

ARCADIS
1100 Superior Suite 1250
Cleveland, OH
Phone

JOB TITLE Topok
Parking Canopy Structure
JOB NO.
SHEET NO. B7
CALCULATED BY CMW
DATE 11.24.14
CHECKED BY MGL
DATE 12/23/14

Wind Loads - Rooftop Structures & Equipment

Ultimate Wind Pressures

Building (L) = 116.0 ft
Building (B) = 18.0 ft
Directionality (Kd) = 0.85

Rooftop Structures & Equipment #1

Equipment length parallel to L = 15.0 ft
Equipment length parallel to B = 10.0 ft
Height of equipment = 10.0 ft
Base pressure (qh) = 22.4 psf

Vertical wind pressure		Wind normal to building B		Wind normal to building L	
Ar =	150.0 sf	Ar =	100.0 sf	Ar =	150.0 sf
GCr =	1.500	GCr =	1.51	GCr =	1.89
F = qhGCr Ar =	33.5 Ar (psf)	F = qhGCr Ar =	33.7 Ar (psf)	F = qhGCr Ar =	42.1 Ar (psf) ✓
Fv =	5.0 kips	Fh =	3.4 kips	Fh =	6.3 kips ✓

Rooftop Structures & Equipment #2

Equipment length parallel to L = 15.0 ft
Equipment length parallel to B = 10.0 ft
Height of equipment = 10.0 ft
Base pressure (qh) = 22.4 psf

Vertical wind pressure		Wind normal to building B		Wind normal to building L	
Ar =	150.0 sf	Ar =	100.0 sf	Ar =	150.0 sf
GCr =	1.500	GCr =	1.51	GCr =	1.89
F = qhGCr Ar =	33.5 Ar (psf)	F = qhGCr Ar =	33.7 Ar (psf)	F = qhGCr Ar =	42.1 Ar (psf) ✓
Fv =	5.0 kips	Fh =	3.4 kips	Fh =	6.3 kips ✓

ARCADIS
1100 Superior Suite 1250
Cleveland, OH
Phone

JOB TITLE Topok
Parking Canopy Structure
JOB NO.
SHEET NO. 38
CALCULATED BY CMW
DATE 11.24.14
CHECKED BY MSL
DATE 12/22/14

Wind Loads - Other Structures:

Ultimate Wind Pressures

Importance Factor =	1.00		
Gust Effect Factor (G) =	0.85	Wind Speed =	110 mph
Kzt =	1.00	Exposure =	C

A. Solid Freestanding Walls & Solid Signs (& open signs with less than 30% open)

		s/h =	1.00	Case A & B	
Dist to sign top (h)	8.0 ft	B/s =	25.00	C_f =	1.30
Height (s)	8.0 ft	Lr/s =	0.00	F = qz G Cf As =	24.7 As
Width (B)	200.0 ft	Kz =	0.849	As =	10.0 sf
Wall Return (Lr) =		qz =	22.4 psf	F =	247 lbs
Directionality (Kd)	0.85				
Percent of open area to gross area	0.0%	Open reduction factor =	1.00		

Case C reduction factors
Factor if s/h>0.8 = 0.80
Wall return factor for Cf at 0 to s = 1.00

Case C

Horiz dist from windward edge	Cf	F=qzGCfAs (psf)
0 to s	3.29	62.5 As
s to 2s	2.07	39.2 As
2s to 3s	1.59	30.1 As
3s to 4s	1.31	24.8 As
4s to 5s	1.23	23.4 As
5s to 10s	0.78	16.0 As
>10s	0.44	16.0 As

B. Open Signs & Lattice Frameworks (openings 30% or more of gross area)

Height to centroid of Af (z)	15.0 ft			Kz =	0.849
				Base pressure (qz) =	22.4 psf
Width (zero if round)	0.0 ft				
Diameter (zero if rect)	2.0 ft	D(qz)^.5 =	9.46	$F = q_z G C_f A_f$ =	20.9 Af
Percent of open area		I =	0.65	Solid Area: A_f =	10.0 sf
to gross area	35.0%	C_f =	1.1	F =	209 lbs
Directionality (Kd)	0.85				

C. Chimneys, Tanks, Rooftop Equipment (h>60') & Similar Structures

Height to centroid of Af (z)	15.0 ft	Kz =	0.849
Cross-Section	Square	Base pressure (qz) =	23.7 psf
Directionality (Kd)	0.90		h/D = 15.00
Height (h)	15.0 ft		
Width (D)	1.0 ft		
Type of Surface	N/A		

Square (wind along diagonal)		Square (wind normal to face)	
Cf =	1.28	C_f =	1.67
F = qz G Cf Af =	25.7 Af	$F = q_z G C_f A_f$ =	33.5 Af
Af =	sf	A_f =	10.0 sf
F =	0 lbs	F =	335 lbs

D. Trussed Towers

Height to centroid of Af (z)	15.0 ft	Kz =	0.849
∈ =	0.27	Base pressure (qz) =	26.3 psf
Tower Cross Section	square		
Member Shape	flat	Diagonal wind factor =	1.2
Directionality (Kd)	1.00	Round member factor =	1.000

Square (wind along tower diagonal)		Square (wind normal to face)	
Cf =	3.24	C_f =	2.70
F = qz G Cf Af =	72.4 Af	$F = q_z G C_f A_f$ =	60.3 Af
Solid Area: Af =	10.0 sf	Solid Area: A_f =	10.0 sf
F =	724 lbs	F =	603 lbs

ARCADIS
1100 Superior Suite 1250
Cleveland, OH
Phone

JOB TITLE Topok
Parking Canopy Structure
JOB NO. SHEET NO. B9
CALCULATED BY CMW DATE 11.24.14
CHECKED BY MSL DATE 12/23/14

Snow Loads :

Roof slope	=	1.2 deg
Horiz. eave to ridge dist (W) =		9.0 ft
Roof length parallel to ridge (L) =		116.0 ft

Type of Roof		Hip and gable w/ trussed systems
Ground Snow Load	Pg =	0.0 psf
Risk Category	=	II
Importance Factor	I =	1.0
Thermal Factor	Ct =	1.00
Exposure Factor	Ce =	1.0
$Pf = 0.7*Ce*Ct*I^2Pg$	=	0.0 psf
Unobstructed Slippery Surface (per Section 7.4)		yes
Sloped-roof Factor	Cs =	1.00
Balanced Snow Load	Ps =	0.0 psf
Rain on Snow Surcharge Angle		0.18 deg
Code Maximum Rain Surcharge		5.0 psf
Rain on Snow Surcharge	=	0.0 psf
Ps plus rain surcharge	=	0.0 psf
Minimum Snow Load	Pm =	0.0 psf
Uniform Roof Design Snow Load	=	0.0 psf

NOTE: Alternate spans of continuous beams and other areas shall be loaded with half the design roof snow load so as to produce the greatest possible effect - see code.

Unbalanced Snow Loads - for Hip & Gable roofs only

Required if slope is between 7 on 12 =		30.26 deg
and 2.38 deg =		2.38 deg
Windward snow load =		0.0 psf
Leeward snow load =		0.0 psf

Unbalanced snow loads are not required

Windward Snow Drifts 1 - Against walls, parapets, etc more than 15' long

Upwind fetch	lu =	220.0 ft
Projection height	h =	5.2 ft
Snow density	g =	14.0 pcf
Balanced snow height	hb =	0.00 ft
	hc =	5.20 ft
#DIV/0! #DIV/0!	#DIV/0!	
Drift height	hd =	#DIV/0!
Drift width	w =	#DIV/0!
Surcharge load:	pd = γ*hd =	#DIV/0!
Balanced Snow load:	=	0.0 psf
		#DIV/0!

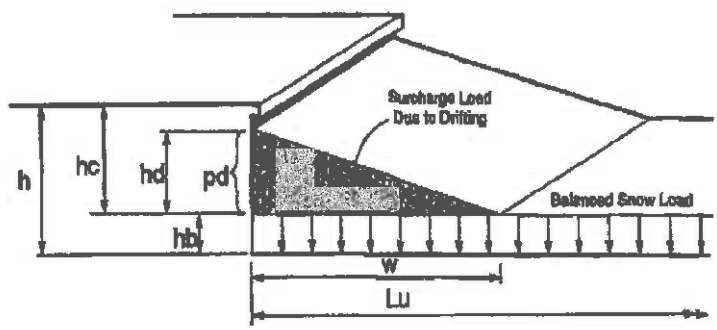

Windward Snow Drifts 2 - Against walls, parapets, etc > 15'

Upwind fetch	lu =	220.0 ft
Projection height	h =	5.2 ft
Snow density	g =	14.0 pcf
Balanced snow height	hb =	0.00 ft
	hc =	5.20 ft
#DIV/0! #DIV/0!	#DIV/0!	
Drift height	hd =	#DIV/0!
Drift width	w =	#DIV/0!
Surcharge load:	pd = γ*hd =	#DIV/0!
Balanced Snow load:	=	0.0 psf
		#DIV/0!

ARCADIS
1100 Superior Suite 1250
Cleveland, OH
Phone

JOB TITLE Topok
Parking Canopy Structure
JOB NO.
SHEET NO. B10
CALCULATED BY CMW
DATE 11.24.14
CHECKED BY MSL
DATE 12/23/14

Seismic Loads:

Risk Category : II
Importance Factor (I) : 1.00
Site Class : D

Ss (0.2 sec) = 23.00 %g
S1 (1.0 sec) = 12.00 %g

Fa =	1.600	Sms =	0.368	S_{DS} =	0.245	Design Category =	B
Fv =	2.320	Sm1 =	0.278	S_{D1} =	0.186	Design Category =	C

Seismic Design Category = C
Number of Stories: 1
Structure Type: Moment-resisting frame systems of steel
Horizontal Struct Irregularities: No plan irregularity
Vertical Structural Irregularities: No vertical irregularity
Flexible Diaphragms: No
Building System: **Moment-resisting Frame Systems**
Seismic resisting system: **Steel ordinary moment frames**
System Structural Height Limit: **Height not limited**
Actual Structural Height (hn) = 11.3 ft

DESIGN COEFFICIENTS AND FACTORS

Response Modification Coefficient (R) = 3.5
Over-Strength Factor (Ωo) = 3
Deflection Amplification Factor (Cd) = 3
S_{DS} = 0.245
S_{D1} = 0.186

Seismic Load Effect (E) = ρQ_E +/- $0.2S_{DS}D$ = ρQ_E +/- 0.049D
Special Seismic Load Effect (Em) = $\Omega o\, Q_E$ +/- $0.2S_{DS}D$ = 3.0 Q_E +/- 0.049D

ρ = redundancy coefficient
Q_E = horizontal seismic force
D = dead load

PERMITTED ANALYTICAL PROCEDURES

Simplified Analysis - Use Equivalent Lateral Force Analysis

Equivalent Lateral-Force Analysis - Permitted

Building period coef. (C_T) =	0.028			Cu = 1.53
Approx fundamental period (Ta) =	$C_T h_n^x$ =	0.194 sec	x= 0.80	Tmax = CuTa = 0.297
User calculated fundamental period (T) =		0 sec		Use T = 0.194
Long Period Transition Period (TL) =	ASCE7 map =	12		
Seismic response coef. (Cs) =	$S_{DS}I/R$ =	0.070		
need not exceed Cs =	Sd1 I/RT =	0.273		
but not less than Cs =	0.044SdsI =	0.011		
USE Cs =		0.070		

Design Base Shear V = 0.070W

Model & Seismic Response Analysis - Permitted (see code for procedure)

ALLOWABLE STORY DRIFT

Structure Type: All other structures

Allowable story drift = 0.020hsx where hsx is the story height below level x

ARCADIS
1100 Superior Suite 1250
Cleveland, OH
Phone

JOB TITLE Topok
Parking Canopy Structure
JOB NO.
SHEET NO. B11
CALCULATED BY CMW
DATE 11.24.14
CHECKED BY MSL
DATE 12/23/14

Roof Design Loads

Items	Description	Multiple	psf (max)	psf (min)
Decking	Metal Roof deck, 1.5, 22 ga.	2.14	~~1.7~~	1.5 ~~1.2~~
Framing	Steel roof joists & girders		3.0	2.0
Framing	Steel roof joists & girders		3.0	2.0
0	0		~~0.0~~	~~0.0~~
			~~0.0~~	~~0.0~~
Mech & Elec	Mech. & Elec.		2.0	0.0
Misc.	~~Misc.~~ SOLAR PANELS		~~0.5~~ 10	0.0
			~~0.0~~	~~0.0~~
			20.1	5.5
	Actual Dead Load		10.2	~~5.2~~
	Use this DL Instead		20.0	9.0
	Live Load		20.0	0.0
	Snow Load		0.0	0.0
	Wind (zone 2 - 100sf)		16.4	-36.6
ASD Loading	D + Lr		40.0	-
	D + 0.75(0.6*W + Lr)		42.4	-
	0.6*D + 0.6*W		-	-18.6
LRFD Loading	1.2D + 1.6 Lr + 0.5W		64.2	-
	1.2D + 1.0W + 0.5Lr		50.4	-
	0.9D + 1.0W		-	-28.5

Roof Live Load Reduction **Roof angle** 0.25 / 12 1.2 deg

0 to 200 sf: 20.0 psf
200 to 600 sf: 24 - 0.02Area, but not less than 12 psf
over 600 sf: 12.0 psf

	300 sf	18.0 psf
	400 sf	16.0 psf
	500 sf	14.0 psf
User Input:	450 psf	15.0 psf

CONSERVATIVE B/C 9" & 6" GAPS B/W ADJACENT PANELS
49.38#/(6.917FT x 4FT) = 1.78 psf + 3 psf RACKING = 4.78 psf < 5 psf ✓OK

B-12

Lotycz, Matt

From: Sidoti, John
Sent: Wednesday, November 19, 2014 8:46 AM
To: Lotycz, Matt
Subject: RE: Topock
Attachments: BYD 3BB PV Module-UL-40mm (P6C-36)-June.2013 .pdf_DC020385.pdf

RACKING EQUIPMENT/HARDWARE
50#/(6.41' x 3.26') = 2.39 psf x 2 = 4.79 psf ≈ 5 psf

This module is 77"x39.1" (6.4' x 3.25'), and about 50 lbs.

So, we might have a 35 x 2 arrangement on the roof, with about 70 modules, or 3500 lbs. This does not include the roof racking equipment, but I think you are in good shape with 10 lbs/SF.

+ 3500# RACKING EQUIP (CONSERVATIVE)
7,000# / (12FT x 116FT LONG)
(ALL IN 12FT WIDTH)
= 5.03 psf
< 10 psf ✓OK DESIGNED FOR

This is all rough and ready, just a ballpark at this point.

John Sidoti, PE | Electrical Engineer | john.sidoti@arcadis-us.com

ARCADIS U.S., Inc. | 222 South Main St., Suite 300 | Akron, OH, 44308
T: 330.434.1995 (Main) | 330.515.5682 (Direct) Connect with us! www.arcadis-us.com | LinkedIn | Twitter | Facebook

ARCADIS, Imagine the result
Please consider the environment before printing this email.

-----Original Message-----
From: Lotycz, Matt
Sent: Wednesday, November 19, 2014 8:39 AM
To: Sidoti, John
Cc: Baxter, Jonathan
Subject: RE: Topock

John - since we did not hear from Jon, let's move forward on 120 foot long (12 cars).

Matt

-----Original Message-----
From: Lotycz, Matt
Sent: Monday, November 17, 2014 4:28 PM
To: Sidoti, John
Cc: Baxter, Jonathan (Jonathan.Baxter@arcadis-us.com)
Subject: RE: Topock

Will do. I will have some structural drawings for the pre-eng Workshop building later this week (CAD exports for you to use as backgrounds showing columns, column lines, building height, etc.). However, structural drawings for the parking structure will not be ready till early to mid-next week at the earliest. You can see the attached pdf showing the 18 foot parking structure width by 100 feet long (10 cars) or 120 feet long (12 cars).

Jon B - please confirm parking structure length you want me to show on my drawings, 100 feet long (10 cars) or 120 feet long (12 cars)? Thanks.

Lotycz, Matt

B-13

From: Sidoti, John
Sent: Wednesday, November 26, 2014 9:46 AM
To: Lotycz, Matt
Cc: Baxter, Jonathan
Subject: Topock CHQ photovoltaic layout
Attachments: BYD 3BB PV Module-UL-40mm (P6C-36)-June.2013 .pdf_DOC020385.pdf; S-15-07 with solar layouts.dwg; 141103sm_-_quick_start_installation_guide.pdf; design.unirac.pdf

Hey Matt—

I want to coordinate with you on the solar layout for the workshop and the parking structure.

A few items:

- I used/attached S-15-07 to show some proposed layouts. For the workshop, I have two potential layouts—one on the north side and one on the south. Let me know if you have a preference. Note that north side photovoltaics would be tilted. On the right side, I just showed a rough dimension outline for the parking structure, with the proposed layout.
- The "BYD..." PDF shows dimensions and weight of the photovoltaic panel.
- The "141103sm..." PDF is an installation guide to give you a picture of what the rack system looks like.
- The "design.unirac" PDF is the results from an online tool from Solar Mount. I ran this for an 8x5 arrangement of modules. The roof type says "shingle", but I just did this preliminarily to see if it provides any value for you. It has some basic loading information.

Call me after you've had a chance to review.

Thanks,

John

John Sidoti, PE | Electrical Engineer | john.sidoti@arcadis-us.com

ARCADIS U.S., Inc. | 222 South Main St., Suite 300 | Akron, OH, 44308
T: 330.434.1995 (Main) | 330.515.5682 (Direct)
Connect with us! www.arcadis-us.com | LinkedIn | Twitter | Facebook

ARCADIS, Imagine the result
Please consider the environment before printing this email.

BYD P6C-36 Series-3BB

285W 290W 295W 300W 305W

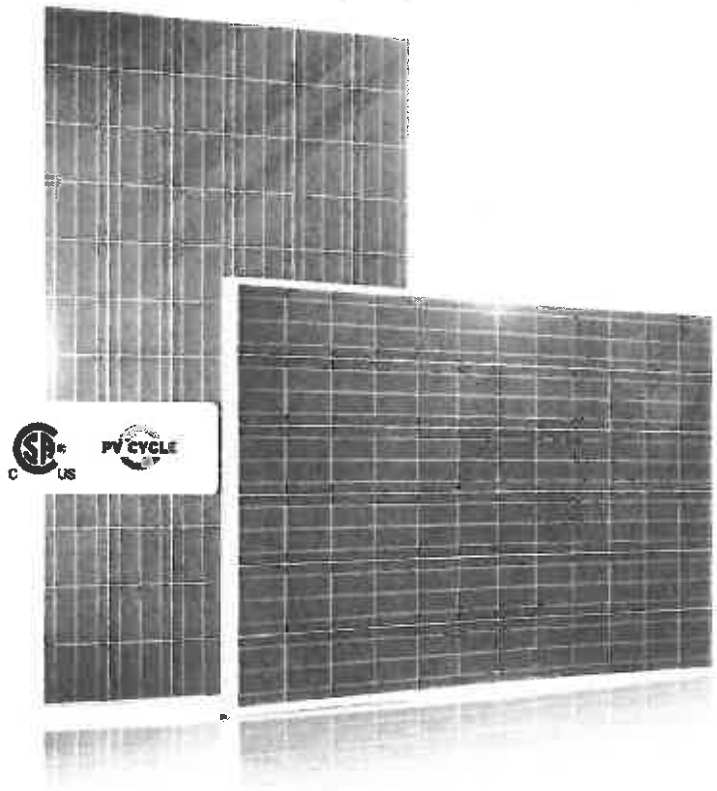

- Average cell efficiency up to17.6%
  Excellent optical performance
- Positive tolerance 0~5W
  Reliability for output performance
- 12 years for product
  25 years linear Warranty
- Residential roof top systems
  On/Off-grid commercial systems
  On/Off-grid utility systems
- 45lb/ft2 Mechanical Load Test
  Class C fire class rating
- ULC/ORD-C1703-01, UL 1703-3rd Edition,
  ISO9001:2008, ISO14001:2004

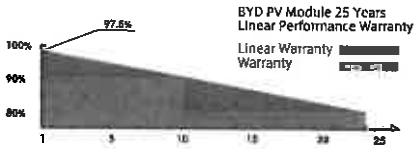

Production Process

Wafer Production

Cell Production

Module Production

Module

About BYD

BYD (HK:1211), one of the world's top PV manufacturers, produces from wafer to module, committing to high quality sustainable products and continuous improvement. Integrating with Electrical Vehicles and Battery Energy Storage technology makes BYD the world-leading solution provider from energy generating to consumption and storage

New Technology

NES
A high technology that is widely used in BYD photovoltaic products, increasing the average cell efficiency up to 17.6%

BYD COMPANY LIMITED Headquarter
Add.: No.3009, BYD Road, Pingshan, Shenzhen, 518118, P.R.China
Tel: +86-755-89888888
Fax: +86-755-84202222
Email: bydenergy@byd.com
Http://www.byd.com.cn

Edition No. EN-BYD-June-2013

BYD P6C-36 Series-3BB

Build Your Dreams

285W 290W 295W 300W 305W

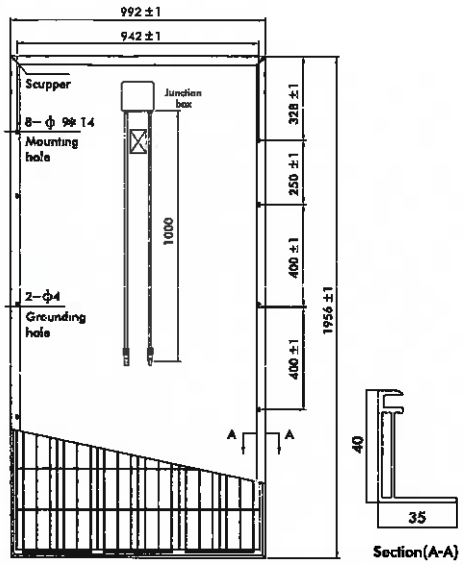

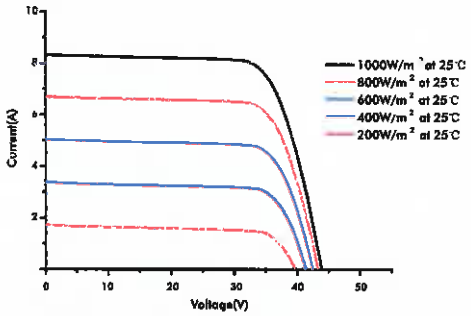

Mechanical Specifications

Cell	**Polycrystalline Silicon solar cells** 156mm * 156 mm / 6 inch
No. of Cells	72 (6*12) pcses
Dimension of Module	1956 mm * 992 mm * 40 mm / 77.0 inch * 39.1 inch *1.6 inch
Weight	22.4kg / 49.38 lbs
Front Glass	3.2 mm tempered glass with ARC
Frame	Anodized aluminum alloy
Junction Box	Ip67
Plug Connector	IP67
Bypass-Diodes	3 pcses
Type of Connector	202 (MC4-compatible)
Cable Section Area	4 mm² / 0.0062 Sq in
Cable Length	2*1000 mm / 2*39.4 inch

2.36psf

Temperature Coefficients

Nominal Operating Cell Temperature (NOCT)	46℃± 2℃
Short-Circuit Current Temperature Coefficient	0.06%/℃
Open-Circuit Voltage Temperature Coefficient	-0.34%/℃
Peak Power Temperature Coefficient	-0.43%/℃

Package Information

Package	40' HC
Pcs / Pallet	25
Pallet / Container	22
Pcs / Container	550

BYD P6C-36 Series Electrical Specification

STC

Module / Item	BYD 285P6C-36	BYD 290P6C-36	BYD 295P6C-36	BYD 300P6C-36	BYD 305P6C-36
Open Circuit Voltage (Voc)	44.30 V	44.80 V	44.90 V	45.19 V	45.49 V
Maximum Operating Voltage (Vmp)	35.40 V	35.65 V	35.76 V	35.97 V	36.18 V
Short Circuit Current (Isc)	8.60 A	8.67 A	8.75 A	8.83 A	8.91 A
Maximum Operating Current (Imp)	8.07 A	8.16 A	8.25 A	8.34 A	8.43 A
Maximum Power in STC (Pmax)	285 Wp	290 Wp	295 Wp	300 Wp	305 Wp
Module Efficiency	14.69%	14.95%	15.20%	15.46%	15.72%
Operating Temperature	-40 ~ 85℃				
Max Fuse Current Rating	15 A				
Maximum System Voltage	1000 VDC				
Power Tolerance	0 ~ 5W				
Application Classes	Class A				

According to chart on original Option B layout

STC: IRRADIANCE 1000W/m², Module Temperature 25℃, AM=1.5 Ave. efficiency reduction of 4.5% at 200W/m²

NOCT

Module / Item	BYD 285P6C-36	BYD 290P6C-36	BYD 295P6C-36	BYD 300P6C-36	BYD 305P6C-36
Open Circuit Voltage (Voc)	40.75 V	41.04	41.33 V	41.62 V	41.89 V
Maximum Operating Voltage (Vmp)	32.25 V	32.50 V	32.79 V	32.97V	33.20V
Short Circuit Current (Isc)	6.96 A	7.06 A	7.10 A	7.14 A	7.18 A
Maximum Operating Current (Imp)	6.42 A	6.48 A	6.51 A	6.57 A	6.61 A
Maximum Power in NOCT (Pmax)	207.1 Wp	210.7 Wp	213.6 Wp	216.6Wp	219.5 Wp

NOCT: Open-circuit module operation temperature at 800W/m2 irradiance, 20° C ambient temperature, 1m/s wind speed

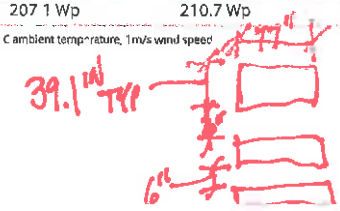

SM SOLAR MOUNT

INSTALLATION GUIDE

PUB14NOV03

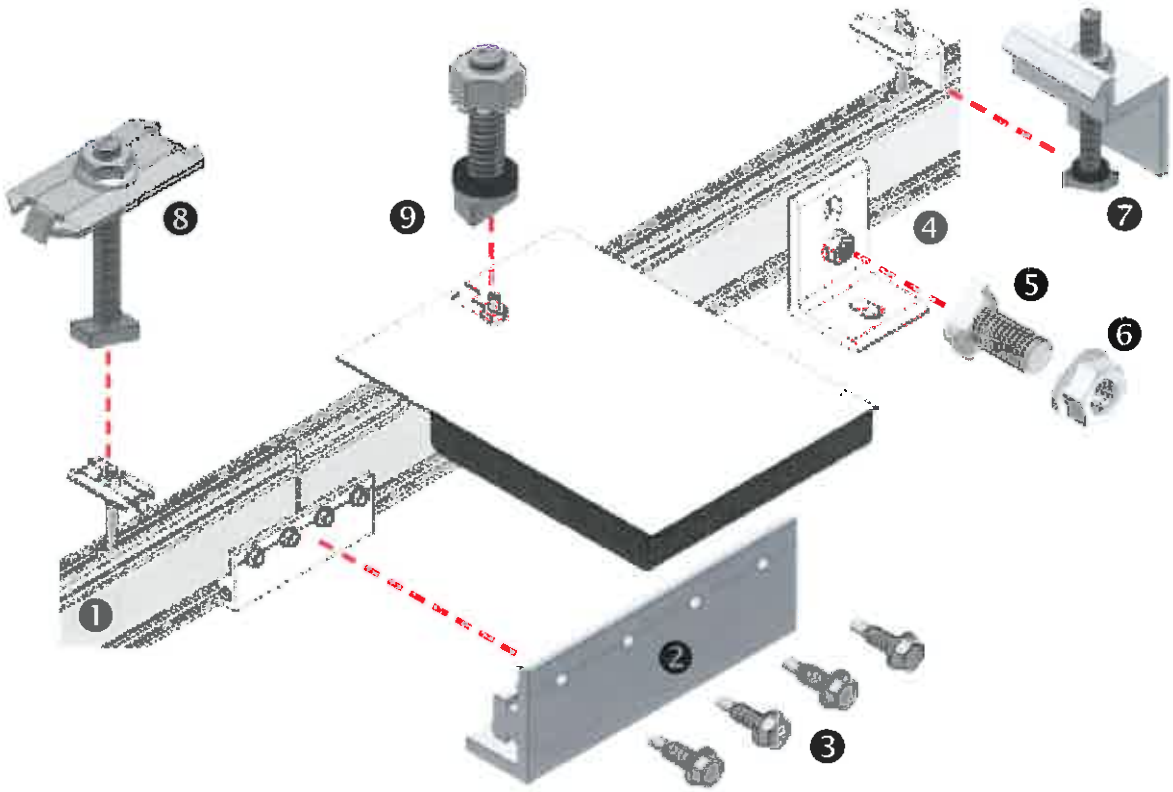

❶RAIL: Supports PV modules. Use at least two per row of modules. Aluminum extrusion, available in mill, clear anodized, or dark anodized.

❷RAIL SPLICE: Non structural splice joins and aligns rail sections into single length of rail. It can form either a rigid or thermal expansion joint, 4 inches long, predrilled. Anodized aluminum extrusion available in clear or dark.

❸SELF-DRILLING SCREW: (No. 12 x ¾") – Use 4 per rigid splice or 2 per expansion joint. Stainless steel. Supplied with splice. In combination with rail splice, provides rail to rail bond at rigid joint.

❹L-FOOT: Use to secure rails through roofing material to building structure. Refer to loading tables or U-Builder for spacing.

❺L-FOOT T- BOLT: (3/8" x ¾") – Use one per L-foot to secure rail to L-foot. Stainless steel. Supplied with L-foot. In combination with flange nut, provides electrical bond between rail and L-foot.

❻FLANGE NUT (3/8"): Use one per L-foot to secure rail to L-foot. Stainless steel. Supplied with L-foot.

❼MODULE END CLAMP: Provides bond from rail to end clamp. Pre-assembled aluminum clamp available in clear or dark finish. Supplied neoprene washers keep clamp and bolt upright for ease of assembly.

❽MODULE MID CLAMP: Pre-assembled clamp provides module to module and module to rail bond. Stainless steel clamp and T-bolt. Available in clear and dark finish.

❾MICRO-INVERTER MOUNTING BOLT: Pre-assembled bolt and nut Attaches micro-inverter to rail. Neoprene washer at base keeps bolt upright for ease of assembly.

NOTE - POSITION INDICATOR: T-Bolts have a slot in the hardware end corresponding to the direction of the T-Head.

Wrenches and Torque

	Wrench Size	Recommended Torque (ft-lbs)
1/4" Hardware ●●●	7/16"	*10
3/8" Hardware ●	9/16"	*30
#12 Hardware ●	5/16"	10

Torques are not designed for use with wood connectors
*w/Anti-seize.

Anti-Seize*

Stainless steel hardware can seize up, a process called galling. To significantly reduce its likelihood:
1. Apply minimal lubricant to bolts, preferably anti-seize commonly found at auto parts stores
2. Shade hardware prior to installation, and
3. Avoid spinning stainless on nuts onto bolts at high speed.

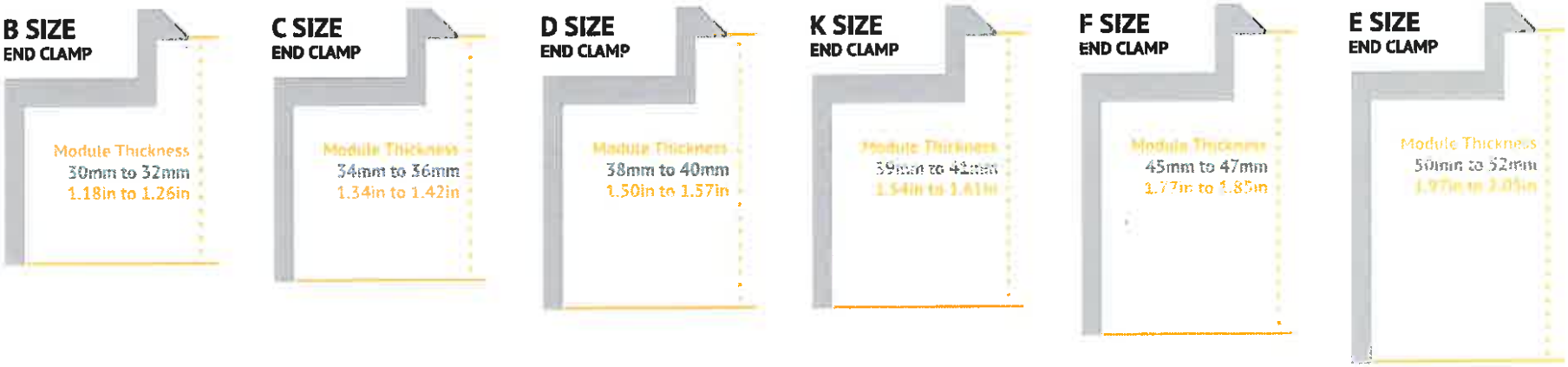
B SIZE
END CLAMP
Module Thickness
30mm to 32mm
1.18in to 1.26in
C SIZE
END CLAMP
Module Thickness
34mm to 36mm
1.34in to 1.42in
D SIZE
END CLAMP
Module Thickness
38mm to 40mm
1.50in to 1.57in
K SIZE
END CLAMP
Module Thickness
39mm to 42mm
1.54in to 1.61in
F SIZE
END CLAMP
Module Thickness
45mm to 47mm
1.77in to 1.85in
E SIZE
END CLAMP
Module Thickness
50mm to 52mm
1.97in to 2.05in

BC SIZE
MID CLAMP
3in Long T-Bolt

DK SIZE
MID CLAMP
2.25in Long T-Bolt

EF SIZE
MID CLAMP
2.5in Long T-Bolt

PLANNING YOUR SOLARMOUNT INSTALLATIONS

The installation can be laid out with rails parallel to the rafters or perpendicular to the rafters. Note that SOLARMOUNT rails make excellent straight edges for doing layouts.

Center the installation area over the structural members as much as possible.

Leave enough room to safely move around the array during installation. Some building codes and fire codes require minimum clearances around such installations, and the installer should check local building code requirements for compliance.

The length of the installation area is equal to:

- the total width of the modules,
- plus ¼" inch for each space between modules (for mid- clamp),
- plus approximately 3 inches (1½ inches for each end clamp).

LAYING OUT L-FEET FOR TOP CLAMPS

L-feet, in conjunction with proper flashing equipment and techniques, can be used for attachment through existing roofing material, such as asphalt shingles, sheathing or sheet metal to the building structure.

Locate and mark the position of the L-feet lag screw holes within the installation area as shown below. Follow manufacturer module guide for rail spacing based on appropriate mounting locations.

If multiple rows are to be installed adjacent to one another, it is not likely that each row will be centered above the rafters. Adjust as needed, following the guidelines below as closely as possible.

this shows parallel or perpendicular arrangements

RAILS MAY BE PLACED PARALLEL OR PERPENDICULAR TO RAFTERS

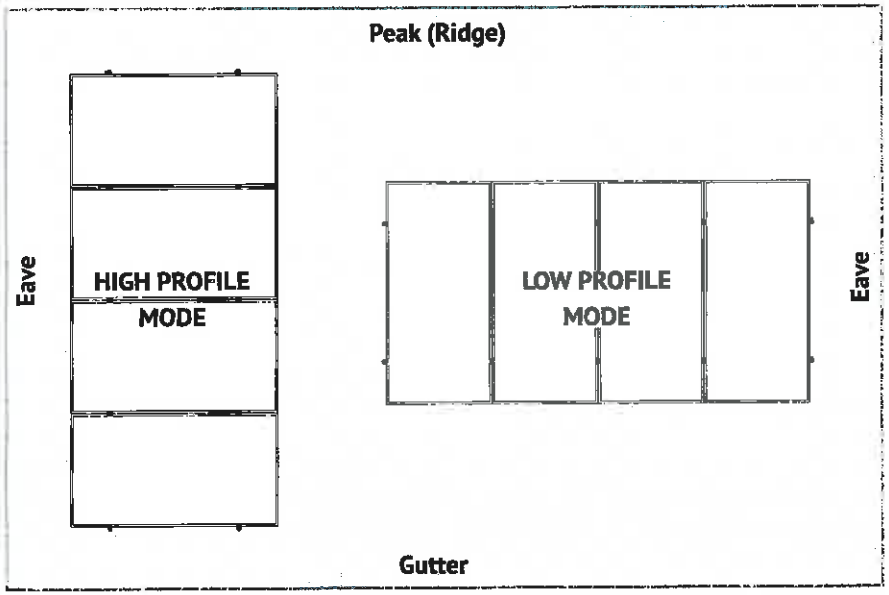

LAYOUT WITH RAILS PERPENDICULAR TO RAFTERS (RECOMMENDED)

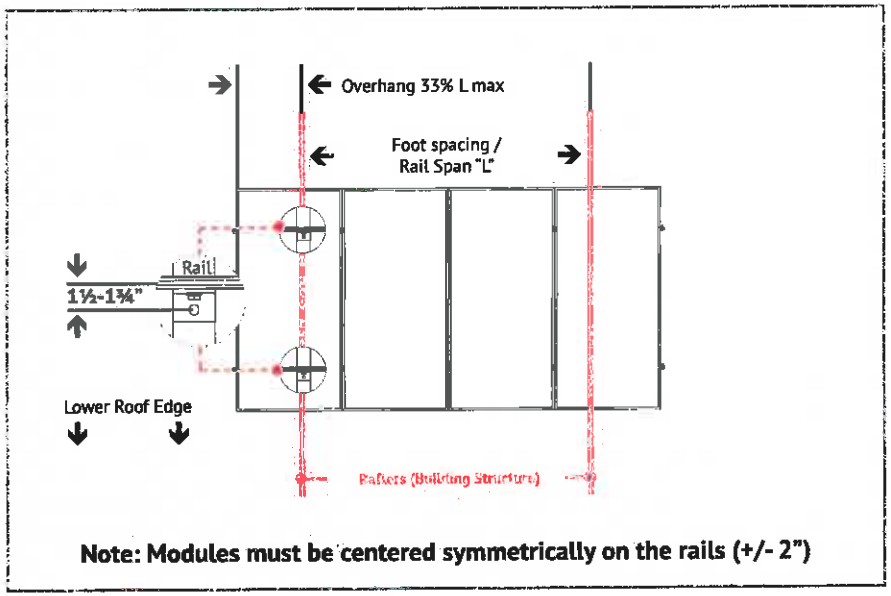

Note: Modules must be centered symmetrically on the rails (+/- 2")

ROOF PREPARATION: Layout and install flashing at rafter locations determined per design and engineering guide.

DRILL PILOT HOLES: Center the roof attachment over the rafter and drill a pilot hole(s) for the lag bolt(s)

NOTE: Determine lag bolt size and embedment depth per design guide instructions.

Quick Tip: Pre-drill the pilot hole through the flat flashing lag bolt location for easier installation.

FLAT FLASHING INSTALLATION: Insert the Flat Flashing so the top part is under the next row of shingles and the hole lines up with the pilot hole.

INSTALL LAG BOLTS & L-FOOT: Insert the lag bolt through the L-Foot in the order shown in the illustration. Verify proper orientation before tightening lag bolts.

See Unirac Flat Flashing Manual for Additional Details.

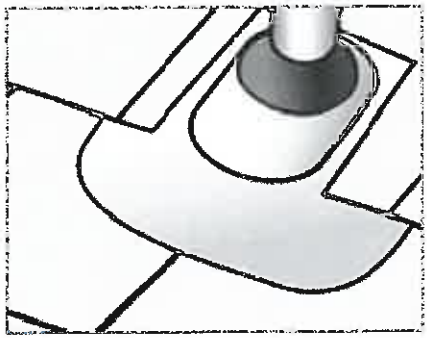

2 PIECE ALUMINUM STANDOFF WITH FLASHING & L-FOOT:

- If necessary cut an opening in the roofing material over a rafter to accommodate the flashing riser.
- Install the standoff, ensuring that both lag bolts are screwed into the rafter.
- Insert the flashing under the shingle above and over the shaft of the standoff. (No-Calk™ collar does not require sealing of the flashing and standoff shaft)
- Add L-Foot to top with bolt that secures the EPDM washer to the top of the standoff.

See Standoffs & Flashings Installation Manual 907.2 for Additional Details.

TOP MOUNT TILE HOOK & L-FOOT:

- Remove or slide up the roof tile, position the roof hook above the roof rafter
- Place Tile Hook in the middle of the underlying interlocking tile's valley. Drill 3/16 inch pilot holes through the underlayment into the center of the rafters. Securely fasten each tile hook to the rafters with two 5/16" x 3½" lag screws. Slide down or re-insert the tile
- Attach L Foot to tile roof hook

See Tile Hook Universal Mount Installation Manual for Additional Information

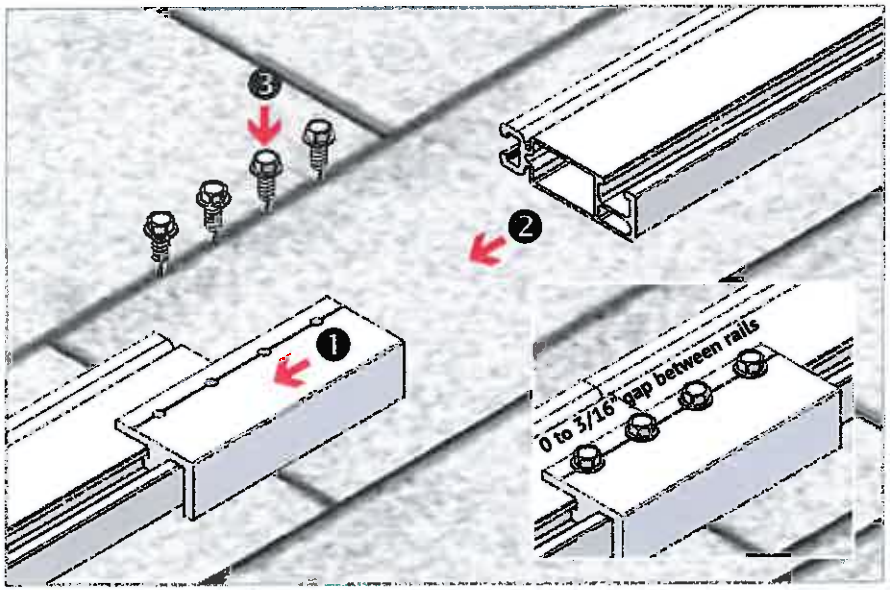

SPLICE INSTALLATION (IF REQUIRED PER SYSTEM DESIGN)

If your installation uses SOLARMOUNT splice bars, attach the rails together before mounting to the L-feet / footings. Use splice bars only with flush installations or those that use low-profile tilt legs. A rail should always be supported by more than one footing on both sides of the splice. There should be a gap between rails, up to 3/16" at the splice connections.

TORQUE VALUE (See Note on PG. 1)
Hex head socket size 5/16" - Do not exceed 10 Ft-lbs. Do not use Anti-Seize

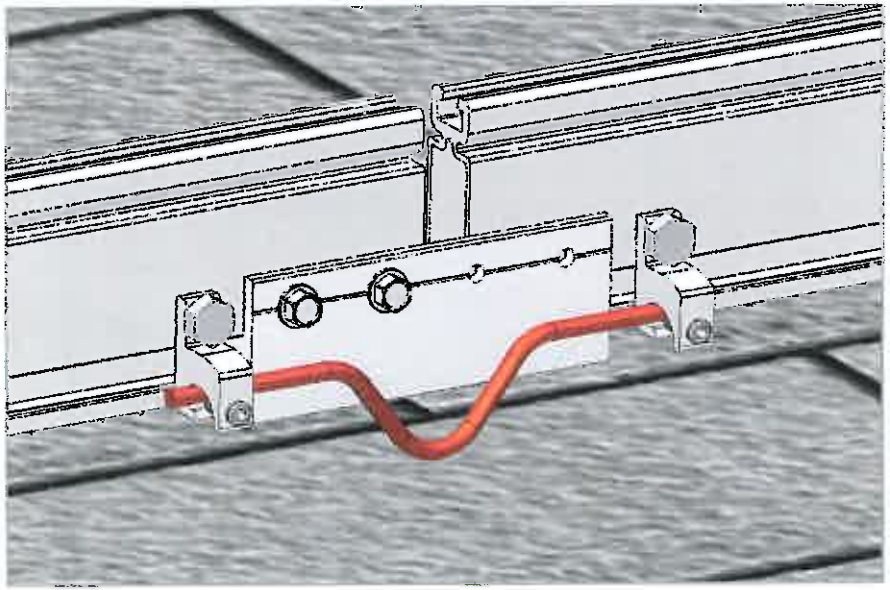

EXPANSION JOINT USED AS THERMAL BREAK

Expansion joints prevent buckling of rails due to thermal expansion. Splice bars may be used for thermal expansion joints. To create a thermal expansion joint, slide the splice bar into the footing slots of both rail lengths. Leave approximately ½" between the rail segments. Secure the splice bar with two screws on one side only. Footings (such as L-feet or standoffs) should be secured normally on both sides of the splice. No PV module or mounting hardware component should straddle the expansion joint. Modules must clearly end before the joint with mounting hardware (top mount end clamps) terminating on that rail. The next set of modules would then start after the splice with mounting hardware beginning on the next rail. **A thermal break is required every 40 feet of continuously connected rail. For additional concerns on thermal breaks in your specific project, please consult a licensed structural engineer. Runs of rail less than 40 feet in length, with more than two pairs spliced together, are an acceptable installation for the SolarMount systems.**

Bonding connection for splice used as a thermal break. Option shown uses two Ilsco lugs (Model No. GBL-4DBT P/N GBL-4DBT - see product datasheet for more details) and solid copper wire.

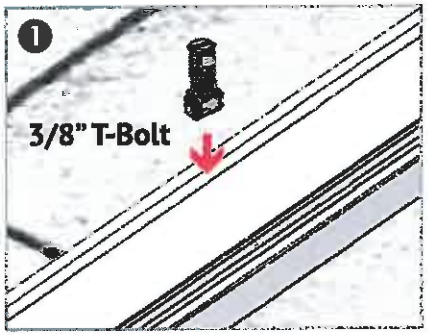

PLACE T-BOLT INTO RAIL: Insert 3/8" T-bolt into rail at L-foot locations.

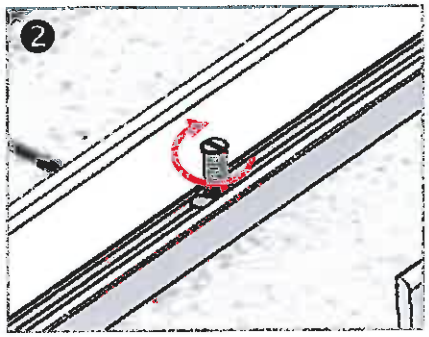

SECURE T-BOLT: Apply Anti-Seize to bolt. Rotate T-bolt into position

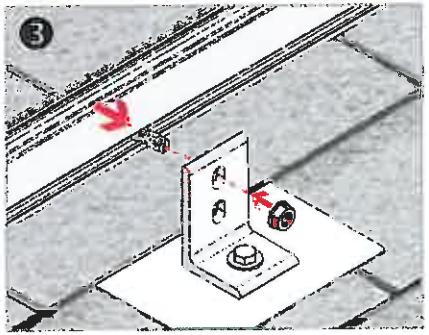

CONNECT RAIL TO L-FOOT: Raise rail to upright position and attach to L-feet to T-Bolt with 3/8" Serrated Flange Nut. Use either slot to obtain desired height and alignment.

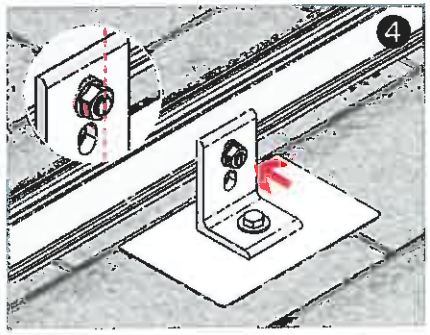

ALIGN POSITION INDICATOR: Hand tighten nut until rail alignment is complete. Verify that position indicator on bolt is vertical (perpendicular to rail)

TORQUE VALUE (See Note on PG. 1)
3/8" nut to 30 ft-lbs

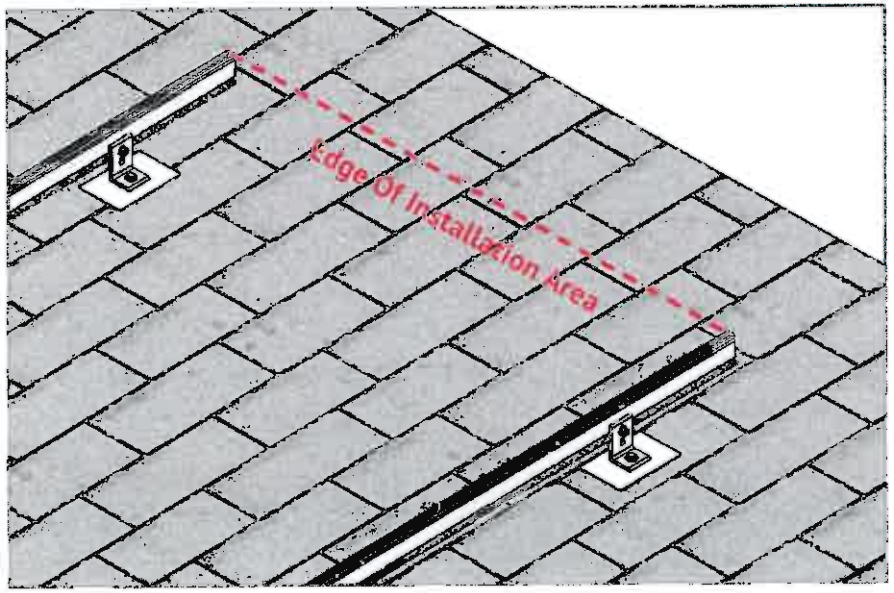

ALIGN RAILS:
Align one pair of rail ends to the edge of the installation area. The opposite pair of rail ends will overhang installation area. Do not trim them off until the installation is complete. If the rails are perpendicular to the rafters, either end of the rails can be aligned, but the first module must be installed at the aligned end.

If the rails are parallel to the rafters, the aligned end of the rails must face the lower edge of the roof. Securely tighten all hardware after alignment is complete.

Mount modules to the rails as soon as possible. Large temperature changes may bow the rails within a few hours if module placement is delayed.

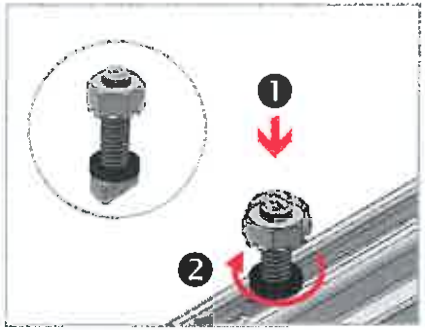

INSTALL MICROINVERTER MOUNT T-BOLT: Apply anti-seize and install pre-assembled ¼" x 1" bonding t-bolts into top ¼" rail slot at micro inverter locations. Rotate bolts into position.

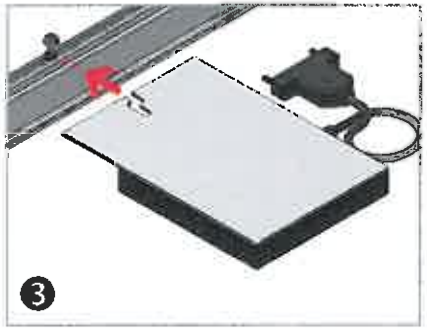

INSTALL MICROINVERTER: Install micro-inverter on to rail. Engage with bolt.

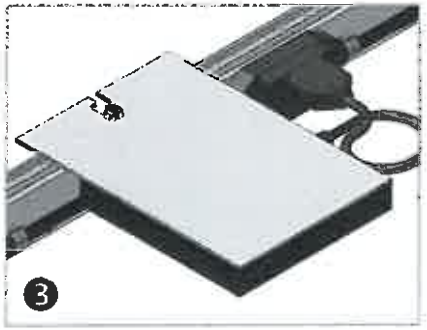

INSTALL MICROINVERTER:

TORQUE VALUE (See Note on PG. 1)
1/4" nut to 10 ft-lbs w/Anti-Seize

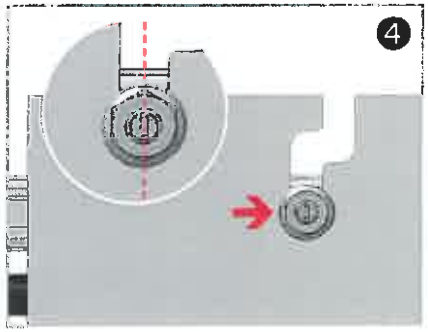

ALIGN POSITION INDICATOR: Verify that position indicator on bolt is perpendicular to rail

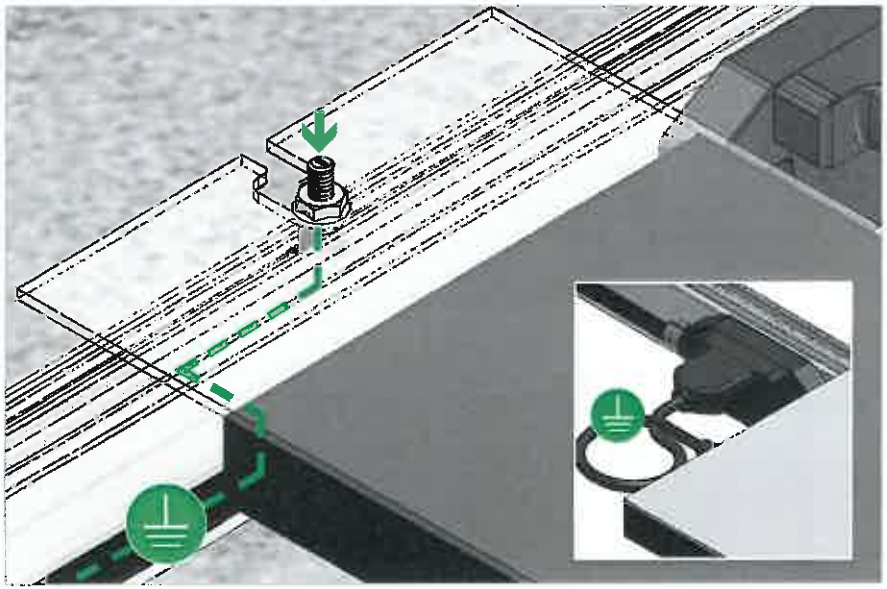

SM EQUIPMENT GROUNDING THROUGH ENPHASE MICROINVERTERS

The Enphase M215, M250 and C250 microinverters have integrated grounding capabilities built in. In this case, the DC circuit is isolated from the AC circuit, and the AC equipment grounding conductor (EGC) is built into the Enphase Engage integrated grounding (IG) cabling.

A minimum of one Enphase microinverter with integrated ground must be present on a single trunk cable. The microinverter is bonded to the SOLARMOUNT rail via the mounting hardware. Complete equipment grounding is achieved through the Enphase Engage cabling with integrated grounding (IG). No additional EGC grounding cables are required, as all fault current is carried to ground through the Engage cable.

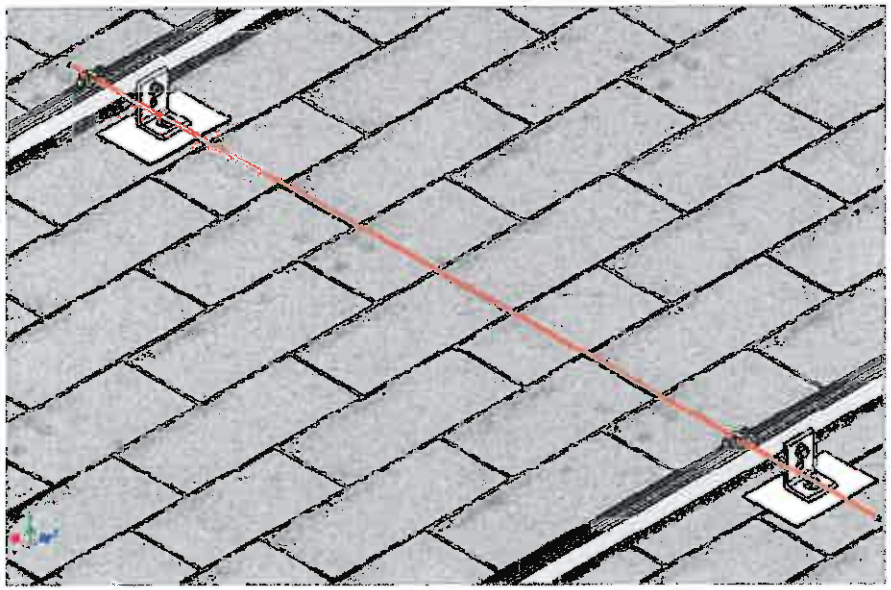

GROUNDING LUG MOUNTING DETAILS:
Details are provided for both the WEEB and Ilsco products. The WEEBLug has a grounding symbol located on the lug assembly. The Ilsco lug has a green colored set screw for grounding indication purposes. Installation must be in accordance with NFPA NEC 70, however the electrical designer of record should refer to the latest revision of NEC for actual grounding conductor cable size

GROUNDING LUG - BOLT SIZE & DRILL SIZE		
GROUND LIG	**BOLT SIZE**	**DRILL SIZE**
WEEBLug	7/16"	N/A - Place in Top SM Rail Slot
ILSCO Lug	#10-32	7/32"

- Torque value depends on conductor size.
- See product data sheet for torque value.

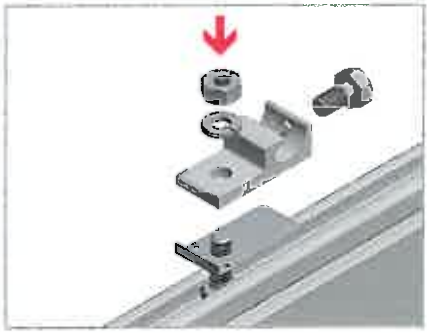

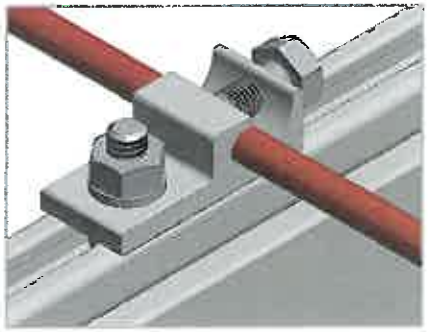

WEEBLUG CONDUCTOR - UNIRAC P/N 008002S:
Apply Anti Seize and insert a bolt in the aluminum rail and through the clearance hole in the stainless steel flat washer. Place the stainless steel flat washer on the bolt, oriented so the dimples will contact the aluminum rail. Place the lug portion on the bolt and stainless steel flat washer. Install stainless steel flat washer, lock washer and nut. Tighten the nut until the dimples are completely embedded into the rail and lug.

See product data sheet for more details, Model No. WEEB-LUG-6.7

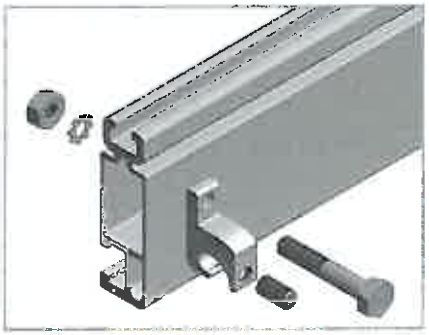

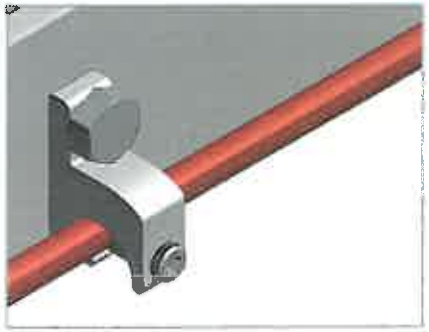

ILSCO LAY-IN LUG CONDUCTOR - UNIRAC P/N 008009P: Alternate Grounding Lug - Drill and bolt thru both rail walls per table.

See product data sheet for more details, Model No. GBL-4DBT

END CLAMP & FIRST MODULE

INSTALL MODULE END CLAMPS: The end clamp is supplied as an assembly with a bonding t-bolt, serrated flange nut, and two neoprene washers. One washer retains the clamp at the top of the assembly. The other washer should be against the bolt head during assembly. This will enable the clamp to remain upright for module installation.

End clamps are positioned on rails prior to the first end module and installed after the last end module

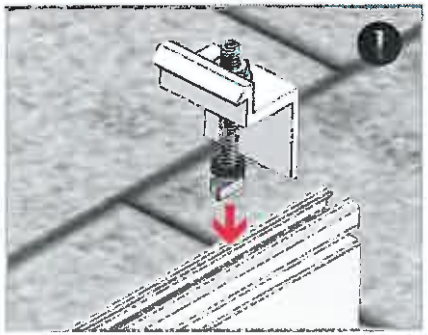

INSERT END CLAMP T-BOLT: Insert 1/4" T-bolt into rail.

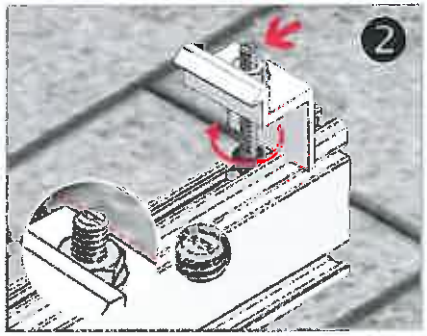

ROTATE END CLAMP T-BOLT: Rotate T-Bolt into position. Verify that the position indicator on the bolt is perpendicular to the rail

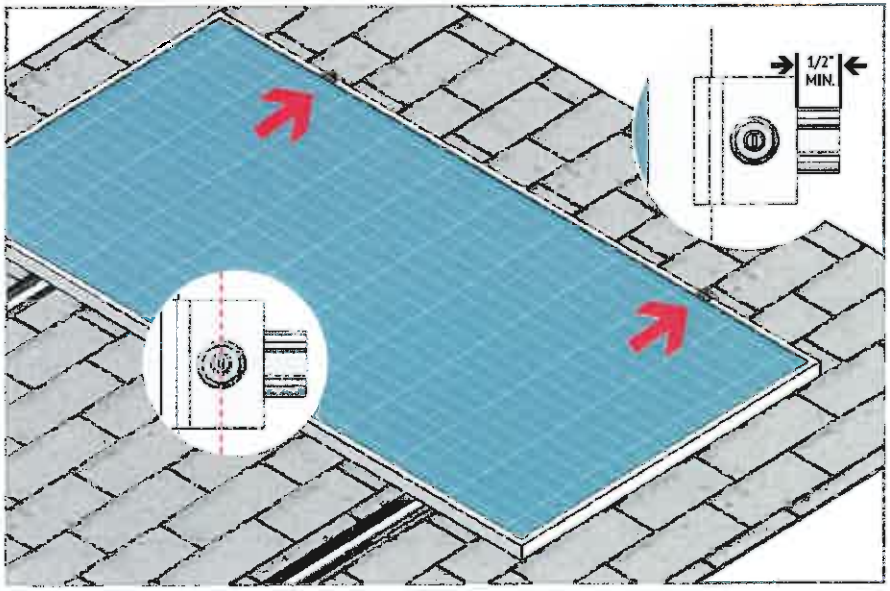

INSTALL FIRST MODULE: Install the first end module on to rails. Engage module frame with end clamps. Verify that the position indicator on the bolt is perpendicular to the rail.

TORQUE VALUE (See Note on PG. 1)
1/4" nuts to 10 ft-lbs. w/Anti Seize

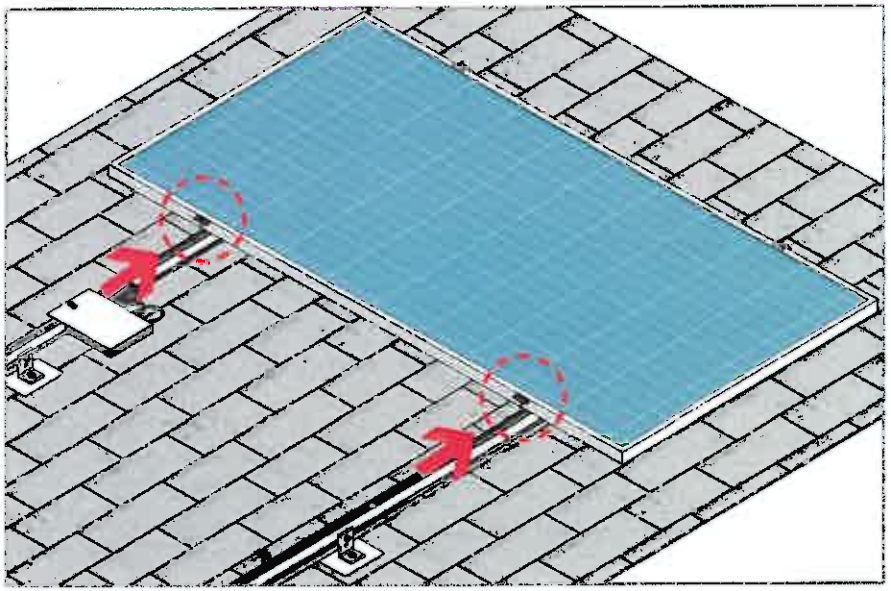

Mid clamp is supplied as an assembly with a bonding t-bolt and a retaining washer to hold the clamp upright for module installation. Clamp assemblies may be positioned in rail near point of use prior to module placement.

INSERT MID CLAMP T-BOLT: Apply Anti-Seize and insert 1/4" T-bolt into rail.

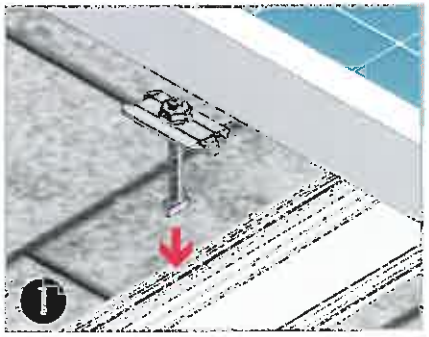

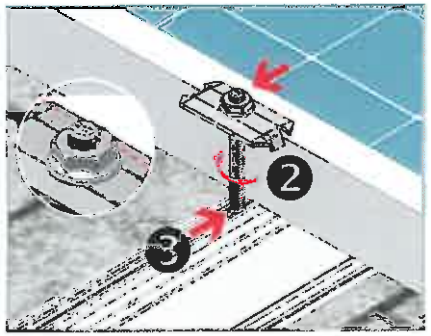

ROTATE MID CLAMP T-BOLT: Rotate bolt into position and slide until bolt and clamp are against module frame. Do not tighten nut until next module is in position. Verify that the position indicator on the bolt is perpendicular to the rail

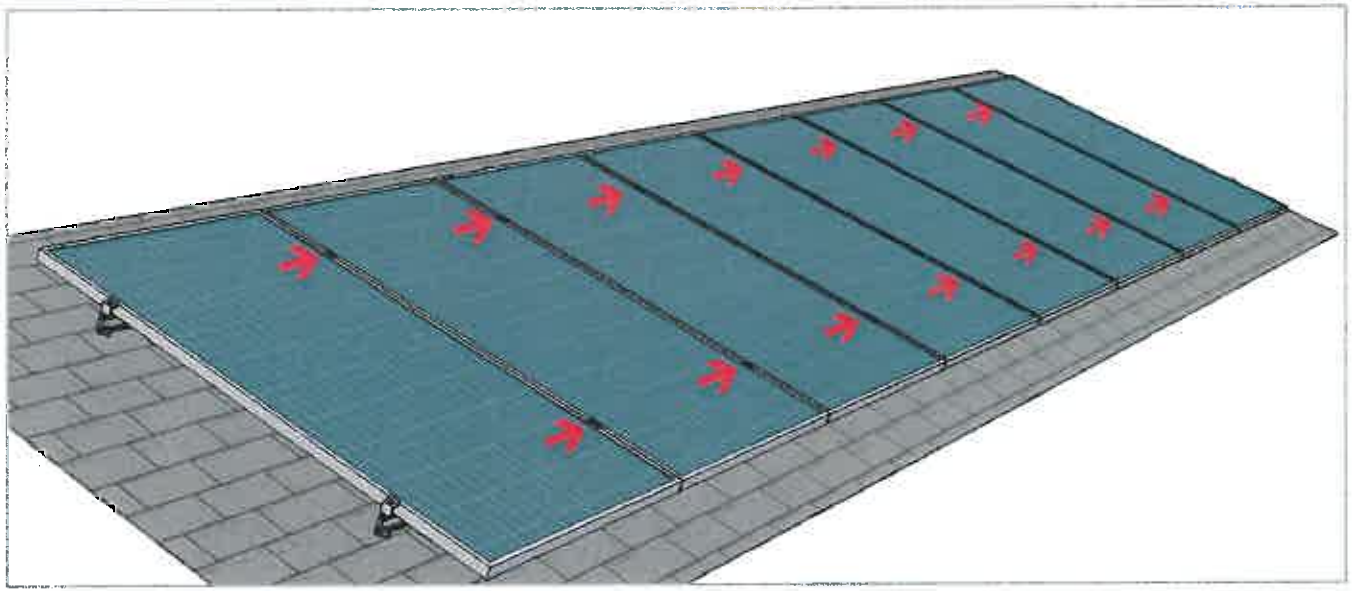

FINISH MODULE INSTALLATION:
Proceed with module installation. Engage each module with the previously positioned clamp assembly:

- Install remaining mid-clamps
- Install End Clamps
- Position alignment marks
- Cut Rail to Desired Length

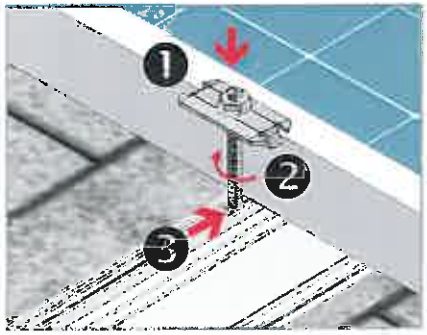

INSTALL REMAINING MID-CLAMPS:
Proceed with module installation. Engage each module with previously positioned mid clamp assemblies.

NOTE: Apply Anti-Seize to each Mid Clamp prior to installation

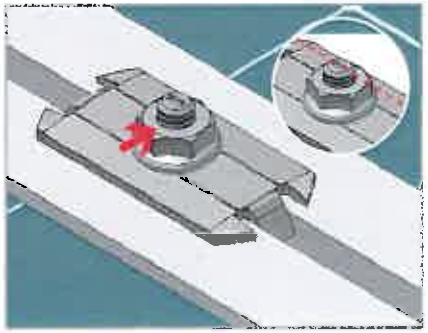

POSITION ALIGNMENT MARKS:
Verify that alignment marks are perpendicular to rail.

TORQUE VALUE (See Note on PG. 1)
1/4" nuts to 10 ft-lbs. w/Anti Seize

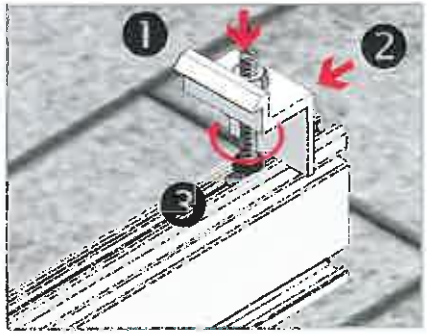

INSTALL END CLAMPS:
Apply Anti-Seize and install final end clamps in same manner as first end clamps. Slide clamps against module .

TORQUE VALUE (See Note on PG. 1)
1/4" nuts to 10 ft-lbs. w/Anti Seize

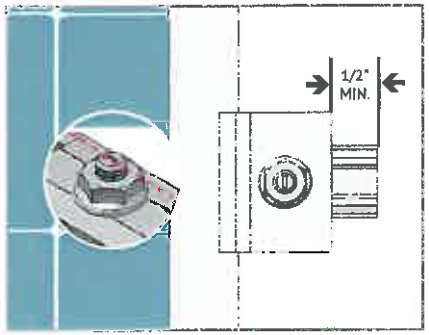

ALIGN POSITION MARKS & CUT RAIL:
Trim off any excess rail, being careful not to cut into the roof. Allow ½" between the end clamp and the end of the rail

BONDING CONNECTION GROUND PATHS

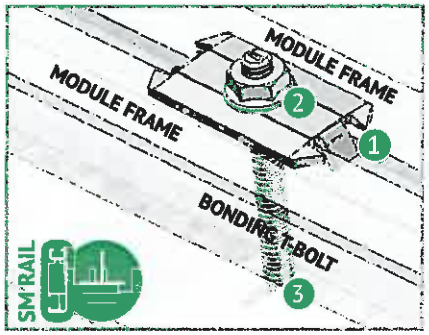

BONDING MID CLAMP ASSEMBLY

1. Stainless steel mid clamp points, 2 per module, pierce module frame anodization to bond module to module through clamp.
2. Serrated flange nut bonds stainless steel clamp to stainless steel T-bolt
3. Serrated T-bolt head penetrates rail anodization to bond T-bolt, nut, clamp, and modules to grounded SM rail

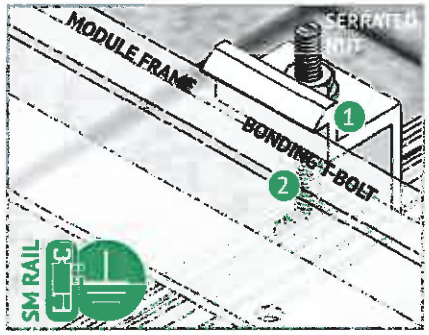

END CLAMP ASSEMBLY

1. Serrated flange nut bonds aluminum end clamp to stainless steel T-bolt
2. Serrated T-bolt head penetrates rail anodization to bond T-bolt, nut, and end clamp to grounded SM rail

Note: Kit clamp does not bond to module frame

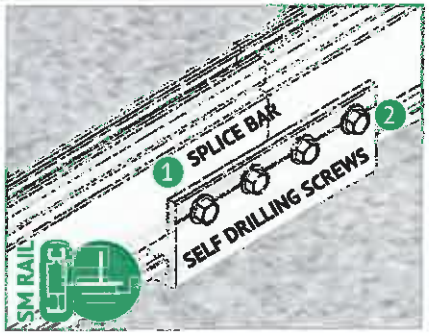

BONDING RAIL SPLICE BAR

1. Stainless steel self drilling screws drill and tap into splice bar and rail creating bond between splice bar and each rail section
2. Aluminum splice bar spans across rail gap to create rail to rail bond. Rail on at least one side of splice will be grounded.

Note: Splice bar and rolled connectors are non-structural. The splice bar function is rail alignment and bonding.

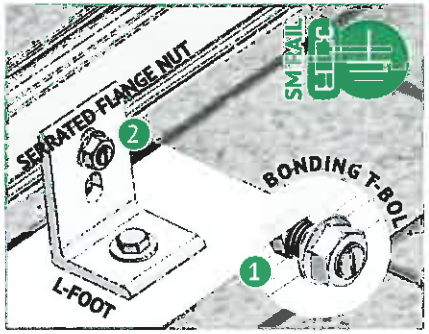

RAIL TO L-FOOT w/BONDING T-BOLT

1. Serrated flange nut removes L-foot anodization to bond L-Foot to stainless steel T-bolt
2. Serrated T-bolt head penetrates rail anodization to bond T-bolt, nut, and L-foot to grounded SM rail

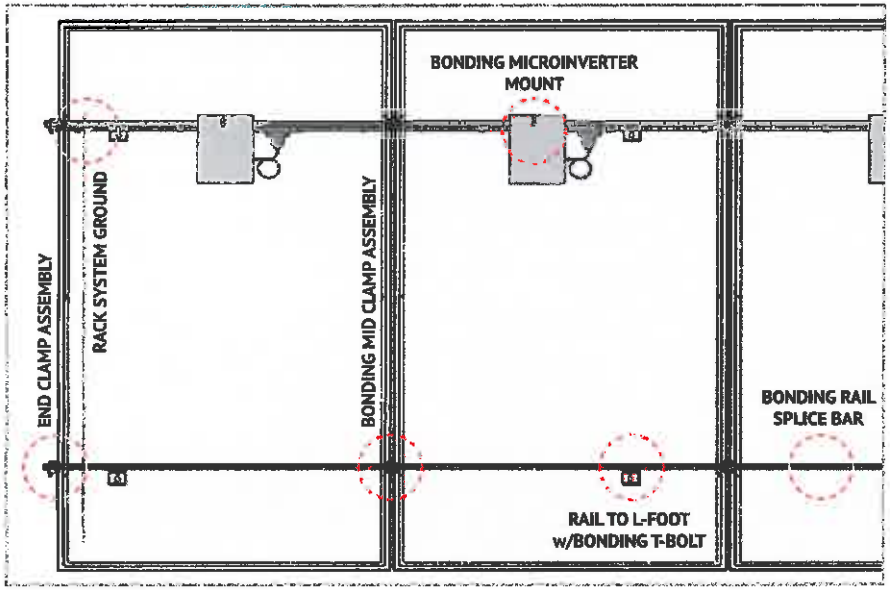

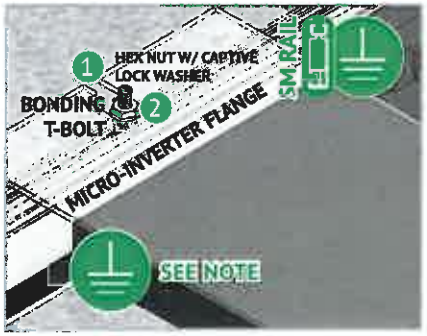

BONDING MICROINVERTER MOUNT

1. Hex nut with captive lock washer bonds metal microinverter flange to stainless steel T-bolt
2. Serrated T-bolt head penetrates rail anodization to bond T-bolt, nut, and L-foot to grounded SM rail

System ground including racking and modules may be achieved with assigned grounding in approved microinverter systems.
See page 7 for details

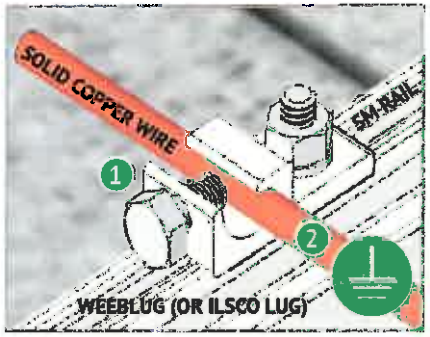

RACK SYSTEM GROUND

1. Weeb washer dimples pierce anodized rail to create bond between rail and lug
2. Solid copper wire connected to lug is routed to provide final system ground connection.

NOTE: Weeb lug can also be used when mounted in the side of the rail.
See page 9 for details

TEMPORARY BONDING CONNECTION DURING ARRAY MAINTENANCE: When removing modules for replacement or system maintenance, any module left in place that is secured with a bonding mid clamp will be properly grounded. If a module adjacent to the end module of a row is removed or if any other maintenance condition leaves a module without a bonding mid clamp, a temporary bonding connection must be installed as shown.

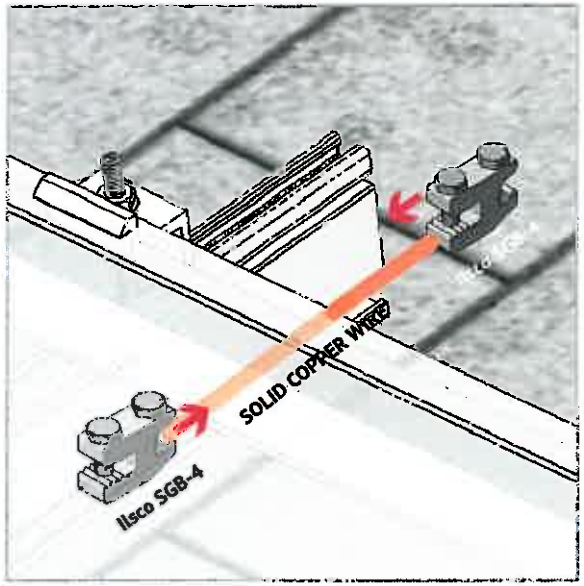

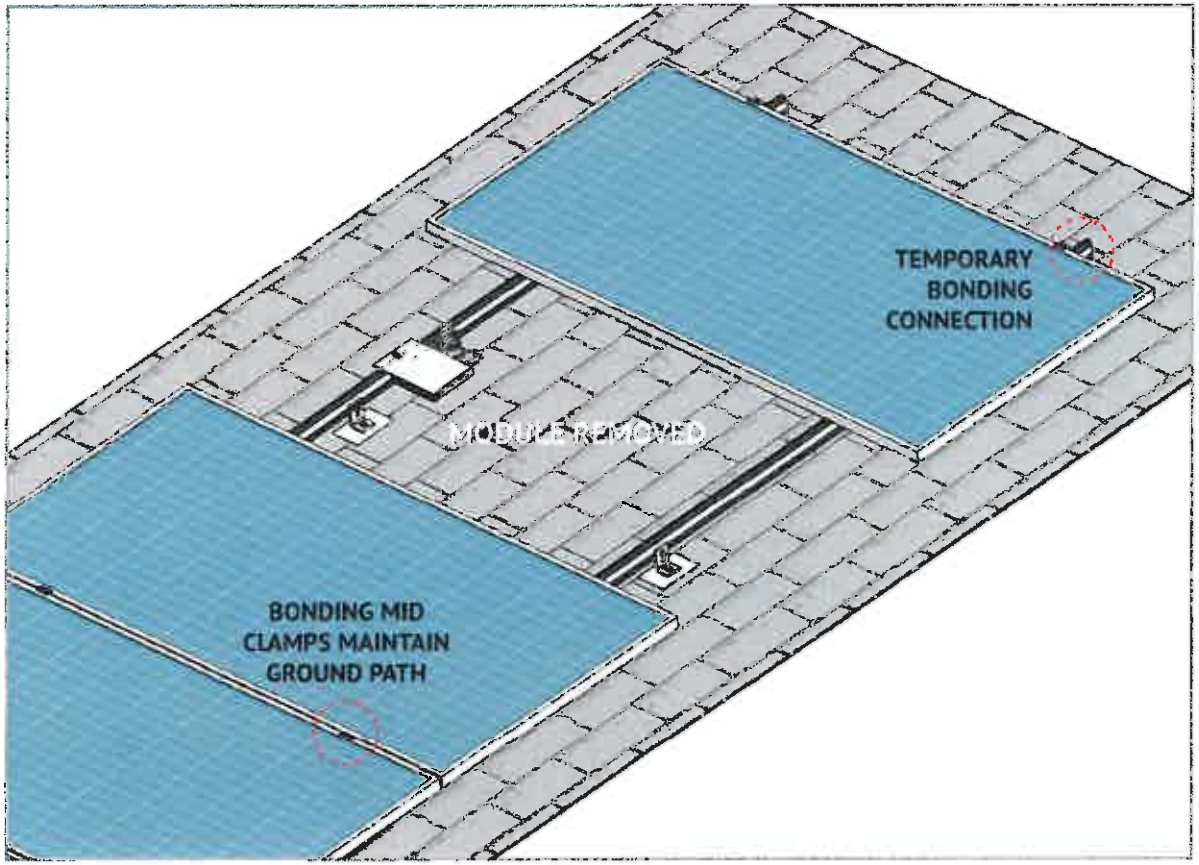

TEMPORARY BONDING CONNECTION

- Attach Ilsco SGB4 to wall of rail
- Attach Ilsco SGB4 to module frame
- Install solid copper wire jumper to Ilsco lugs

UNIRAC
A HILTI GROUP COMPANY

Engineering Report

Project Title: None

Project ID: 96010b11

Name:

Address:

City, State: Needles, CA 92363

Module: BYD BYD 300P6-36

300 Watts

Nov. 26, 2014, 8:20 a.m.

SOLARMOUNT

40 - 300 Watt Panels

834 ft^2

12.0 KWs

Bill of Materials

Parts and Accessories

Legend: Base System Part Accessory

Part Number	Part Type	Description	Quantity	Suggested Quantity	Unit Price (USD)	Total List Price (USD)
320168M	Rail	SM RAIL 168" MILL	20	20	70.75	1415.00
303018C	Splice	BND SPLICE BAR SERRATED CLR	10	10	7.85	78.50
302024C	End Clamp	SM ENDCLAMP E CLR AL	20	20	3.55	71.00
302028C	Mid Clamp	SM BND MIDCLAMP EF SS	70	70	4.15	290.50
304001C	Roof Attachment	L-FOOT SERRATED W/ T-BOLT, CLR	100	100	4.35	435.00
008009P	Grounding Lug	ILSCO LAY IN LUG	5	5	8.40	42.00

Base System	Accessories	Total Price
$1855.00	$477.00	$2332.00
$0.15 per watt	$0.04 per watt	$0.19 per watt

This design is to be evaluated to the product appropriate Unirac Code Compliant Installation Manual which references International Building Code 2003, 2006, 2009, 2012 and ASCE 7-02, ASCE 7-05, ASCE 7-10 and California Building Code 2010. The installation of products related to this design is subject to requirements in the above mentioned installation manual.

Detailed Parts Descriptions

320168M SM RAIL 168" MILL
Structural aluminum extrusion containing slots that accept module and roof attachment hardware, electrical bonding accessories, and splice bars.

Rail
20

303018C BND SPLICE BAR SERRATED CLR
Aluminum extrusion for joining adjacent lengths of rail to one another. Can also function as thermal expansion joint. Includes self drilling screws.

Splice
10

302024C SM ENDCLAMP E CLR AL
Mounts **50-52 mm (1.97-2.05 in) thick** PV modules to rail by clamping module frame from above. Includes T bolt and nut. **If mounting on short side of module frame, confirm this is acceptable with PV module manufacturer.**

End Clamp
20

302028C SM BND MIDCLAMP EF SS
Located between adjacent PV modules, mounts **24-41 mm (0.94-1.61 in) thick** modules to rail by clamping module frame from above. Includes T bolt and nut. **If mounting on short side of module frame, confirm this is acceptable with PV**

Mid Clamp
70

304001C L-FOOT SERRATED W/ T-BOLT, CLR
Angle bracket connecting rail to roof or roof mounting accessory with serration on both mounting surfaces. **Lag bolts sold separately.**

Roof Attachment
100

008009P ILSCO LAY IN LUG
For electrical bonding of PV modules and rails. Accepts 4-14 AWG copper wires. Tin plated copper body, 1/4" stainless steel fasteners.

Grounding Lug
5

UNIRAC
A MILL-SP COMPANY

Engineering Report

Project Title: None

Project ID: 96010b11

Name:

Address:

City, State: Needles, CA 92363

Module: BYD BYD 300P6-36
300 Watts

Nov. 26, 2014, 8:20 a.m.

SOLARMOUNT
40 - 300 Watt Panels

834 ft^2
12.0 KWs

Engineering Report

Plan Review

Roof Point Load Up: -93 lbs

Roof Point Load Down: 133 lbs

Total Number of Modules:	40
Total KW:	12.0 KW
Rows/ Columns:	5 / 8 (no gaps)
NS Dimension:	~385.1 in
EW Dimension:	~316.8 in
Loads Used for Design	
- Building Code:	ASCE 7-05
- Wind Speed:	85 mph
- Ground Snow Load:	0 psf
- Seismic (Ss):	2.15
- Wind Exposure:	B
Loads Determined by Zip	
- City, State:	Needles, CA
- Wind Speed:	85 mph
- Ground Snow Load:	None psf

Inspection

Maximum Rail Span (Zone 1): 87"

Selected Rail Span: 36"

Product:	SOLARMOUNT
Module Manufacturer:	BYD
Model:	BYD 300P6-36
Module Watts:	300 watts
Module Length:	77.01 "
Module Width:	39.01 "
Module Thickness:	1.97 "
Module Orientation:	Portrait
Maximum Rail Cantilever:	12.00 "
Expansion Joints:	Every 40'
Rails Direction:	EW
Building Height:	30 ft
Roof Pitch:	0-7°
Roof Type:	Shingle

UNIRAC

Engineering Report

Project Title: None

Nov. 26, 2014, 8:20 a.m.

Project ID: 96010b11

Name:

Address:

City, State: Needles, CA 92363

Module: BYD BYD 300P6-36

300 Watts

SOLARMOUNT

40 - 300 Watt Panels

834 ft^2

12.0 KWs

Installation and Design Plan

Layout

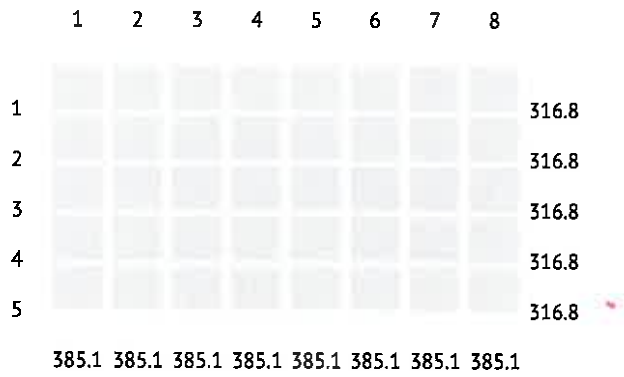

Row	Modules	Zone	Rail Type	Splices	Roof Attachments
1	8	Zone 1	SM RAIL 168" MILL | 320168M | $70 (4)	2	20
2	8	Zone 1	SM RAIL 168" MILL | 320168M | $70 (4)	2	20
3	8	Zone 1	SM RAIL 168" MILL | 320168M | $70 (4)	2	20
4	8	Zone 1	SM RAIL 168" MILL | 320168M | $70 (4)	2	20
5	8	Zone 1	SM RAIL 168" MILL | 320168M | $70 (4)	2	20

Maximum Rail Span (Zone 1*):	87"
Selected Rail Span:	36"
Maximum Rail Cantilever:	12.00 "
Module Orientation:	Portrait
Rail Direction:	EW

*Zone 2 and 3 Rail Spans must be independently verified

B-14

UNIRAC

Engineering Report

Project Title: None

Project ID: c37b2ec5

Name:

Address:

City, State: Needles, CA 92363

Module: BYD BYD 300P6-36

300 Watts

Nov. 26, 2014, 12:08 p.m.

SOLARMOUNT

40 - 300 Watt Panels

834 ft^2

12.0 KWs

Engineering Report

Plan Review

Roof Point Load Up: -48 lbs

Roof Point Load Down: 65 lbs

Total Number of Modules:	40
Total KW:	12.0 KW
Rows/ Columns:	8 / 5 (no gaps)
NS Dimension:	~195.0 in
EW Dimension:	~620.8 in
Loads Used for Design	
- Building Code:	ASCE 7-10
- Wind Speed:	110 mph
- Ground Snow Load:	0 psf
- Seismic (Ss):	2.15
- Wind Exposure:	B
Loads Determined by Zip	
- City, State:	Needles, CA
- Wind Speed:	110 mph
- Ground Snow Load:	None psf

Inspection

Maximum Rail Span (Zone 1): 131"

Selected Rail Span:	36"
Product:	SOLARMOUNT
Module Manufacturer:	BYD
Model:	BYD 300P6-36
Module Watts:	300 watts
Module Length:	77.01 "
Module Width:	39.01 "
Module Thickness:	1.97 "
Module Orientation:	Landscape
Maximum Rail Cantilever:	12.00 "
Expansion Joints:	Every 40'
Rails Direction:	EW
Building Height:	15 ft
Roof Pitch:	0-7°
Roof Type:	Standing Seam Metal

UNIRAC

Engineering Report

Project Title: None

Project ID: c37b2ec5

Name:

Address:

City, State: Needles, CA 92363

Module: BYD BYD 300P6-36
300 Watts

Nov. 26, 2014, 12:08 p.m.

SOLARMOUNT
40 - 300 Watt Panels

834 ft^2
12.0 KWs

Installation and Design Plan

Layout

Row	Modules	Zone	Rail Type	Splices	Roof Attachments
1	8	Zone 1	SM RAIL 168" MILL | 320168M | $70 (2) SM RAIL 240" MILL | 320240M | $101 (4)	4	38
2	8	Zone 1	SM RAIL 168" MILL | 320168M | $70 (2) SM RAIL 240" MILL | 320240M | $101 (4)	4	38
3	8	Zone 1	SM RAIL 168" MILL | 320168M | $70 (2) SM RAIL 240" MILL | 320240M | $101 (4)	4	38
4	8	Zone 1	SM RAIL 168" MILL | 320168M | $70 (2) SM RAIL 240" MILL | 320240M | $101 (4)	4	38
5	8	Zone 1	SM RAIL 168" MILL | 320168M | $70 (2) SM RAIL 240" MILL | 320240M | $101 (4)	4	38

Maximum Rail Span (Zone 1*):	131"
Selected Rail Span:	36"
Maximum Rail Cantilever:	12.00 "
Module Orientation:	Landscape
Rail Direction:	EW

*Zone 2 and 3 Rail Spans must be independently verified

B-14

UNIRAC

Engineering Report

Project Title: None

Project ID: c37b2ec5

Name:

Address:

City, State: Needles, CA 92363

Module: BYD BYD 300P6-36

300 Watts

Nov. 26, 2014, 12:08 p.m.

SOLARMOUNT

40 - 300 Watt Panels

834 ft^2

12.0 KWs

Bill of Materials

Parts and Accessories

Legend: Base System Part Accessory

Part Number	Part Type	Description	Quantity	Suggested Quantity	Unit Price (USD)	Total List Price (USD)
320240M	Rail	SM RAIL 240" MILL	20	20	101.10	2022.00
320168M	Rail	SM RAIL 168" MILL	10	10	70.75	707.50
303018C	Splice	BND SPLICE BAR SERRATED CLR	20	20	7.85	157.00
302024C	End Clamp	SM ENDCLAMP E CLR AL	40	40	3.55	142.00
302028C	Mid Clamp	SM BND MIDCLAMP EF SS	60	60	4.15	249.00
304001C	Roof Attachment	L-FOOT SERRATED W/ T-BOLT, CLR	190	190	4.35	826.50
008009P	Grounding Lug	ILSCO LAY IN LUG	25	25	8.40	210.00

Base System	Accessories	Total Price
$3277.50	$1036.50	$4314.00
$0.27 per watt	$0.09 per watt	$0.36 per watt

This design is to be evaluated to the product appropriate Unirac Code Compliant Installation Manual which references International Building Code 2003, 2006, 2009, 2012 and ASCE 7-02, ASCE 7-05, ASCE 7-10 and California Building Code 2010. The installation of products related to this design is subject to requirements in the above mentioned Installation manual.

Detailed Parts Descriptions

	320240M SM RAIL 240" MILL Structural aluminum extrusion containing slots that accept module and roof attachment hardware, electrical bonding accessories, and splice bars.	Rail 20
	320168M SM RAIL 168" MILL Structural aluminum extrusion containing slots that accept module and roof attachment hardware, electrical bonding accessories, and splice bars.	Rail 10
	303018C BND SPLICE BAR SERRATED CLR Aluminum extrusion for joining adjacent lengths of rail to one another. Can also function as thermal expansion joint. Includes self drilling screws.	Splice 20
	302024C SM ENDCLAMP E CLR AL Mounts 50-52 mm (1.97-2.05 in) thick PV modules to rail by clamping module frame from above. Includes T bolt and nut. If mounting on short side of module frame, confirm this is acceptable with PV module manufacturer.	End Clamp 40
	302028C SM BND MIDCLAMP EF SS Located between adjacent PV modules, mounts 24-41 mm (0.94-1.61 in) thick modules to rail by clamping module frame from above. Includes T bolt and nut. If mounting on short side of module frame, confirm this is acceptable with PV	Mid Clamp 60
	304001C L-FOOT SERRATED W/ T-BOLT, CLR Angle bracket connecting rail to roof or roof mounting accessory with serration on both mounting surfaces. Lag bolts sold separately.	Roof Attachment 190
	008009P ILSCO LAY IN LUG For electrical bonding of PV modules and rails. Accepts 4-14 AWG copper wires. Tin plated copper body, 1/4" stainless steel fasteners.	Grounding Lug 25

ARCADIS

SUBJECT: TOPOK
PARKING CANOPY

JOB NO:

BY: CMW DATE: 12/2/14
CHKD: MSL DATE: 12/23/14

PAGE B15
SHEET 1

INPUT LOADS TO RISA:

DEAD LOAD = 12.5 PSF (MAX) ← 2.14 PSF (DECK DL) + 2 PSF FLE + 8.36 PSF SLAB (B-12) → 5.03 PSF

LIVE LOAD = 20 PSF ✓

SEE SHEET B-15A THRU B-15D

SNOW: N/A

WIND: A: METAL DECK 3 FT WIDE PANEL X 18 FT LONG = 54 SF
METAL AREA = [illegible]
B = (28 FT X 5.81 FT TRIB) = 162.75 SF INCLUDING END ZONE
76 SF > 36 SF

OUTSIDE PURLIN

8'-0" CANTILEVER + 20'-0" SPAN

ZONE 3 = +24.0 PSF, -24.3 PSF

∴ FROM SHT B5, ZONE 1,2,3 ↓ PRESSURE = 10.4 PSF

INSIDE PURLIN TRIB AREA = 28 FT x 6.375 FT = 178 SF

B) ↑ PRESSURE = -24.3 PSF

ZONE 2'S = +24 24.3 PSF

WINDWARD FASCIA = 33.5 PSF →

(CONSERVATIVELY APPLY TO COLUMNS ALSO)

DETERMINE PURLIN LOADS:

1) LRFD #3 ~ 1.2 DL + 1.6 L_R + 0.5 W(↓) + 0.5 W →

3) LRFD # 4 ~ 1.2 DL + 1.0 W(↓) + 1.0 W → + 0.5 L_R

5) LRFD # 6 ~ 0.9 DL + 1.0 W(↓) + 1.0 W →

6) LRFD # 6A ~ 0.9 DL + 1.0 W(↑) + 1.0 W →

← USE RISA TO DETERMINE LOADS TO PURLINS TO BE INPUT INTO FRAME ANALYSIS (SHEET B-17)

AGM Form 80 12-01

ARCADIS

SUBJECT: TOPOK. PARKING CANOPY

JOB NO:

BY: MSL DATE: 12/8/14

CHKD: DATE:

PAGE B-15A

SHEET 1

METAL DECK

** USE 1.5B 20GA TO MEET MFG RECOMMENDED CANTILEVERED MAX SPANS (SHT B-15B)

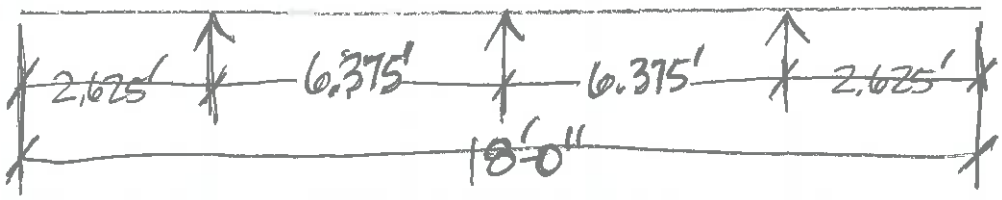

END ZONE (3' STRIP)

→ TRIB FOR C/G LOADS ON METAL DECK TO PURLIN = 3' WIDE × 9FT TRIB = 27SF

36.0 psf ↓ & 36.6 psf ↑ (SHT B-5) →
↑ (SHT B-5)

→ (36.6 psf × 0.6)↑ − (2 psf × 0.6) = 20.76 psf ↑

→ @ METAL DECK TO PURLIN

= 20.76 psf × 9FT TRIB × 3FT WIDE = 561# OVER 3'-0" WIDE

- 4 ATTACHMENTS (TEK SCREWS) @ PURLIN = 561#/4 = 140# UNF
  ↳ ACTUALLY 6 ATTACHMENTS
- PER SHT B-15C → #12-24 T/5 = 3020# ULTIMATE / 4 FS = 755# > ✓OK

→ TRIB FOR METAL DECK DESIGN (1.5B 22GA) = 3' WIDE × 18FT TRIB = 54 SF

10.4 psf & −24.3 psf (SHT B-5) → 0.6D + 0.6W UNF = 13.38 psf ↑
24.0 psf & −21.8 psf (SHT B-5A) → 0.9D + 1.0W FACT = 22.5 psf ↑
→ D + 0.75(0.6W + Lr) UNF = 38.3 psf ↓
1.2D + 1.6Lr + 0.5W FACT = 59.0 psf ↓

DMAX = 12.5 psf, DMIN = 2 psf

→ NEG M = ~~0.203~~ 0.22 K·IN/FT FACT × (38.3/59) psf UNF = ~~0.132~~ 0.143 K·IN/FT UNF

RISA-2D SHT B-17

< 77.3 psf ✓OK (SHT B-15B)

- S_p = 0.186 IN³/FT

3 EQUAL SPANS

- $M_{ALL} = 0.10wL^2 = 0.10(77.3\,psf)(6.375\,FT)^2 = 314.2$ #·IN UNF >> ✓OK

AGM Form 30 12-01

1.5 B, BI, BA, BIA, BSV

Maximum Sheet Length 42'-0
Extra charge for lengths under 6'-0
ICC ER-3415
FM Global Approved[2]

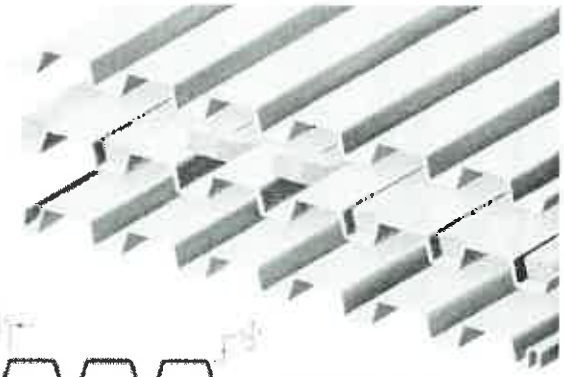

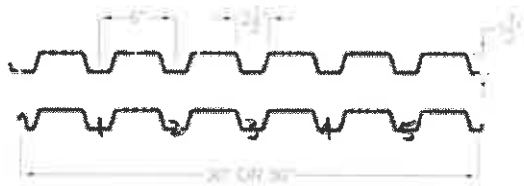

Interlocking side lap is not drawn to show actual detail.

SECTION PROPERTIES

Deck type	Design thickness in.	W psf	Section Properties I_p in^4/ft	S_p in^3/ft	I_n in^4/ft	S_n in^3/ft	V_a lbs/ft	F_y ksi
B24	0.0239	1.46	0.107	0.120	0.135	0.131	2634	60
B22	0.0295	1.78	0.155	0.186	0.183	0.192	1818	33
B20	0.0358	2.14	0.201	0.234	0.222	0.247	2193	33
B19	0.0418	2.49	0.246	0.277	0.260	0.289	2546	33
B18	0.0474	2.82	0.289	0.318	0.295	0.327	2870	33
B16	0.0598	3.54	0.373	0.408	0.373	0.411	3578	33

ACOUSTICAL INFORMATION

Deck Type	Absorption Coefficient 125	250	500	1000	2000	4000	Noise Reduction Coefficient[1]
1.5BA, 1.5BIA	.11	.18	.66	1.02	0.61	0.33	0.60

[1] Source: Riverbank Acoustical Laboratories. Test was conducted with 1.50 pcf fiberglass batts and 2 inch polyisocyanurate foam insulation for the SDI.

USE 20GA FOR CANTILEVER REQUIREMENT

Type B (wide rib) deck provides excellent structural load carrying capacity per pound of steel utilized, and its nestable design eliminates the need for die-set ends.

1" or more rigid insulation is required for Type B deck.

Acoustical deck (Type BA, BIA) is particularly suitable in structures such as auditoriums, schools, and theatres where sound control is desirable. Acoustic perforations are located in the vertical webs where the load carrying properties are negligibly affected (less than 5%).

Inert, non-organic glass fiber sound absorbing batts are placed in the rib openings to absorb up to 60% of the sound striking the deck.

Batts are field installed and may require separation.

VERTICAL LOADS FOR TYPE 1.5B

No. of Spans	Deck Type	Max. SDI Const. Span	Allowable Total (PSF) / Load Causing Deflection of L/240 or 1 inch (PSF) — Span (ft.-in.) ctr to ctr of supports: 5-0	5-6	6-0	6-6	7-0	7-6	8-0	8-6	9-0	9-6	10-0
1	B24	4'-8	115 / 56	95 / 42	80 / 32	68 / 26	59 / 20	51 / 17	45 / 14	40 / 11	35 / 10	32 / 8	29 / 7
	B22	5'-7	98 / 81	81 / 61	68 / 47	58 / 37	50 / 30	44 / 24	38 / 20	34 / 17	30 / 14	27 / 12	25 / 10
	B20	6'-5	123 / 105	102 / 79	86 / 61	73 / 48	63 / 38	55 / 31	48 / 26	43 / 21	38 / 18	34 / 15	31 / 13
	B19	7'-1	146 / 129	121 / 97	101 / 75	86 / 59	74 / 47	65 / 38	57 / 31	51 / 26	45 / 22	40 / 19	36 / 16
	B18	7'-8	168 / 152	138 / 114	116 / 88	99 / 69	85 / 55	74 / 45	65 / 37	58 / 31	52 / 26	46 / 22	42 / 19
	B16	8'-8	215 / 196	178 / 147	149 / 113	127 / 89	110 / 71	96 / 58	84 / 48	74 / 40	66 / 34	60 / 29	54 / 24
2	B24	5'-10	124 / 153	103 / 115	86 / 88	74 / 70	64 / 56	56 / 45	49 / 37	43 / 31	39 / 26	35 / 22	31 / 19
	B22	6'-11	100 / 213	83 / 160	70 / 124	59 / 97	51 / 78	45 / 63	39 / 52	35 / 43	31 / 37	28 / 31	25 / 27
	B20	7'-9	128 / 267	106 / 201	89 / 155	76 / 122	66 / 97	57 / 79	51 / 65	45 / 54	40 / 46	36 / 39	32 / 33
	B19	8'-5	150 / 320	124 / 240	104 / 185	89 / 145	77 / 116	67 / 95	59 / 78	52 / 65	47 / 55	42 / 47	38 / 40
	B18	9'-1	169 / 369	140 / 277	118 / 213	101 / 168	87 / 134	76 / 109	67 / 90	59 / 75	53 / 63	48 / 54	43 / 46
	B16	10'-3	213 / 471	176 / 354	149 / 273	127 / 214	110 / 172	95 / 140	84 / 115	74 / 96	66 / 81	60 / 69	54 / 59
3	B24	5'-10	154 / 120	128 / 90	108 / 69	92 / 55	79 / 44	69 / 35	61 / 29	54 / 24	48 / 21	43 / 17	39 / 15
	B22	6'-11	124 / 167	103 / 126	87 / 97	74 / 76	64 / 61	56 / 50	49 / 41	43 / 34	39 / 29	35 / 24	31 / 21
	B20	7'-9	159 / 209	132 / 157	111 / 121	95 / 95	82 / 76	72 / 62	63 / 51	56 / 43	50 / 36	45 / 31	40 / 26
	B19	8'-5	186 / 250	154 / 188	130 / 145	111 / 114	96 / 91	84 / 74	74 / 61	65 / 51	58 / 43	52 / 37	47 / 31
	B18	9'-1	210 / 289	174 / 217	147 / 167	126 / 132	108 / 105	95 / 86	83 / 71	74 / 59	66 / 50	59 / 42	54 / 36
	B16	10'-3	264 / 369	219 / 277	185 / 214	158 / 168	136 / 135	119 / 109	105 / 90	93 / 75	83 / 63	74 / 54	67 / 46

Notes: 1. Minimum exterior bearing length required is 1.50 inches. Minimum interior bearing length required is 3.00 inches. If these minimum lengths are not provided, web crippling must be checked.
2. FM Global approved numbers and spans available on page 21.

@ 6.375FT = 77.3 psf

TECHNICAL PRODUCT INFORMATION

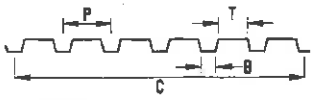

	Deck Type	Gauge	Approximate Dimensions in Inches																			
			Indiana				Nebraska				South Carolina				Texas				Alabama / New York			
			C	P	T	B	C	P	T	B	C	P	T	B	C	P	T	B	C	P	T	B
ROOF	1.5B, 1.5BI, 1.5BA, 1.5BIA 1.5BSV	24 22 20 19 18 16	NA 36 36 36 36 36	6.00	3.50	1.75	30 36 36 36 36 36	6.00	3.50	1.75	36 36 36 36 36 36	6.00	3.50	1.75	NA 36 36 36 36 36	6.00	3.50	1.75	36 36 36 36 36 36	6.00	3.50	1.75
	1.5F	22 20 18	30	6.00	4.25	0.50	36	6.00	4.25	0.50	36	6.00	4.25	0.50	36	6.00	4.25	0.50	36	6.00	4.25	0.50
	1.5A	22 20 18	36	6.00	5.00	0.38	36	6.00	5.00	0.38	36	6.00	5.00	0.38	NA	-	-	-	NA	-	-	-
	3N, 3NI, 3NA, 3NIA	22 20 18 16	24	8.00	5.38	1.88	24	8.00	5.38	1.88	24	8.00	5.38	1.88	24	8.00	5.38	1.88	24	8.00	5.38	1.88
	1.0E	26 24 22 20	36	4.00	1.13	1.13	32	4.00	1.01	1.25	33	3.67	0.90	0.90	33	3.67	1.00	1.00	36	4.00	1.13	1.13
NON-COMPOSITE	0.6C and 0.6CSV	28 26 24 22	NA 30 30 NA	2.50	0.62	0.62	NA 36 36 36	3.04	0.63	0.63	35 35 35 35	2.50	0.75	0.75	30 35 35 35	2.50	0.62	0.62	30 30 30 30	2.50	0.75	0.75
	1.0C and 1.0CSV	26 24 22 20	36	4.00	1.13	1.13	32	4.00	1.25	1.01	33	3.67	0.90	0.90	33	3.67	1.00	1.00	36	4.00	1.13	1.13
	1.3C and 1.3CSV	26 24 22 20	NA	-	-	-	NA	-	-	-	NA	-	-	-	32	4.57	1.06	1.06	NA	-	-	-
	1.5C	24 22 20 18	NA 36 36 36	6.00	1.75	3.50	30 36 36 36	6.00	1.75	3.50	36 36 36 36	6.00	1.75	3.50	30 36 36 36	6.00	1.75	3.50	36 36 36 36	6.00	1.75	3.50
	2C	22 20 18 16	36	12.0	5.00	5.00	36	12.0	5.00	5.00	36	12.0	5.00	5.00	36	12.0	5.00	5.00	36	12.0	5.00	5.00
	3C	22 20 18 16	36	12.0	4.75	4.75	36	12.0	4.75	4.75	36	12.0	4.75	4.75	36	12.0	4.75	4.75	36	12.0	4.75	4.75
COMPOSITE	1.5VL and 1.5VLI	22 20 19 18 16	36	6.00	3.50	1.75	36	6.00	3.50	1.75	36	6.00	3.50	1.75	36	6.00	3.50	1.75	36	6.0	3.50	1.75
	1.5VLR	22 20 19 18 16	36	6.00	1.75	3.50	36	6.00	1.75	3.50	36	6.00	1.75	3.50	36	6.00	1.75	3.50	36	6.0	1.75	3.50
	2VLI	22 20 19 18 16	36	12.0	5.00	5.00	36	12.0	5.00	5.00	36	12.0	5.00	5.00	36	12.0	5.00	5.00	36	12.0	5.00	5.00
	3VLI	22 20 19 18 16	36	12.0	4.75	4.75	36	12.0	4.75	4.75	36	12.0	4.75	4.75	36	12.0	4.75	4.75	36	12.0	4.75	4.75

Steel Roof Deck

RECOMMENDED MAXIMUM SPANS FOR CONSTRUCTION AND MAINTENANCE LOADS STANDARD FOR 1½ INCH AND 3 INCH ROOF DECK						
	TYPE	SPAN CONDITION	SPAN		MAX. RECOMMENDED SPANS ROOF DECK CANTILEVER	
			FT.-IN.	METERS	FT.-IN.	METERS
NARROW RIB DECK	NR22	1	3′-10″	1.15 m	1′-0″	.30 m
	NR22	2 or more	4′-9″	1.45 m		
	NR20	1	4′-10″	1.45 m	1′-2″	.35 m
	NR20	2 or more	5′-11″	1.80 m		
	NR18	1	5′-11″	1.80 m	1′-7″	.45 m
	NR18	2 or more	6′-11″	2.10 m		
INTERMEDIATE RIB DECK	IR22	1	4′-6″	1.35 m	1′-2″	.35 m
	IR22	2 or more	5′-6″	1.65 m		
	IR20	1	5′-3″	1.60 m	1′-5″	.40 m
	IR20	2 or more	6′-3″	1.90 m		
WIDE RIB DECK	WR22	1	5′-6″	1.65 m	1′-11″	.55 m
	WR22	2 or more	6′-6″	1.75 m		
	WR20	1	6′-3″	1.90 m	2′-4″	.70 m
	WR20	2 or more	7′-5″	2.25 m		
	WR18	1	7′-6″	2.30 m	2′-10″	.85 m
	WR18	2 or more	8′-10″	2.70 m		
DEEP RIB DECK	3DR22	1	11′-0″	3.35 m	3′-5″	1.05 m
	3DR22	2 or more	13′-0″	3.95 m		
	3DR20	1	12′-6″	3.80 m	3′-11″	1.20 m
	3DR20	2 or more	14′-8″	4.45 m		
	3DR18	1	15′-0″	4.55 m	4′-9″	1.45 m
	3DR18	2 or more	17′-8″	5.40 m		

2′-7½″ w/ STIFFENED EDGE ✓OK

CANTILEVER DESIGN

STEEL DECK CANTILEVER
EXAMPLE: WR22

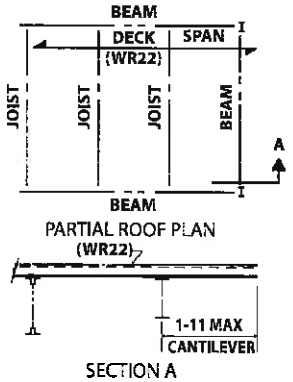

Notes:

1. Adjacent span: Limited to those spans determined in Section 2.4 of Roof Deck Standards. In those instances where the adjacent span is less than 3 times the cantilever span, the individual manufacturer should be consulted for the appropriate cantilever span. ✓
2. Sidelaps must be attached at end of cantilever and at a maximum of 12 inches (300 mm) on center from end. ✓
3. No permanent suspended loads are to be supported by the steel deck. ✓
4. The deck must be completely attached to the supports and at the sidelaps before any load is applied to the cantilever. ✓
5. Service loads may be more severe than indicated in section 2.4.A.7.

Vulcraft Steel Deck — FM Global Approved Spans

Maximum Vulcraft deck spans approved for use in FM Global constructions are shown below. The Engineer of Record must investigate the design as published by FM Global for the required attachment of the steel deck to the supporting structure, deck-to-deck fastening, attachment of insulation to the roof deck, etc. Reference shall be made to: https://roofnav.fmglobal.com

6'-4½" c/c (2) INTERIOR SPANS

Roof Deck

	FM Span / Profile					
Gauge	1.5B, 1.5BI	1.5BA, 1.5 BIA	1.5F	1.5A	3N, 3NI	3NA, 3NIA
22	6' - 0"	5' - 9"	4' - 11"	4' - 0"	12' - 0"	12' - 7"
20	6' - 6"	6' - 4"	5' - 5"	5' - 3"	13' - 5"	13' - 11"
18	7' - 5"	7' - 3"	6' - 3"	6' - 0"	15' - 10"	16' - 1"
16	9' - 4"	7' - 11"	—	—	18' - 1"	18' - 3"

Cellular Deck

	FM Span / Profile	
Gauges	1.5BP, 1.5BPA	3NP, 3NPA
20/20	6' - 6"	13' - 5"
20/18	6' - 6"	13' - 5"
18/20	7' - 5"	15' - 10"
18/18	7' - 5"	15' - 10"
18/16	7' - 5"	15' - 10"
16/18	9' - 4"	18' - 1"
16/16	9' - 4"	18' - 1"

TYPICAL FASTENER LAYOUT

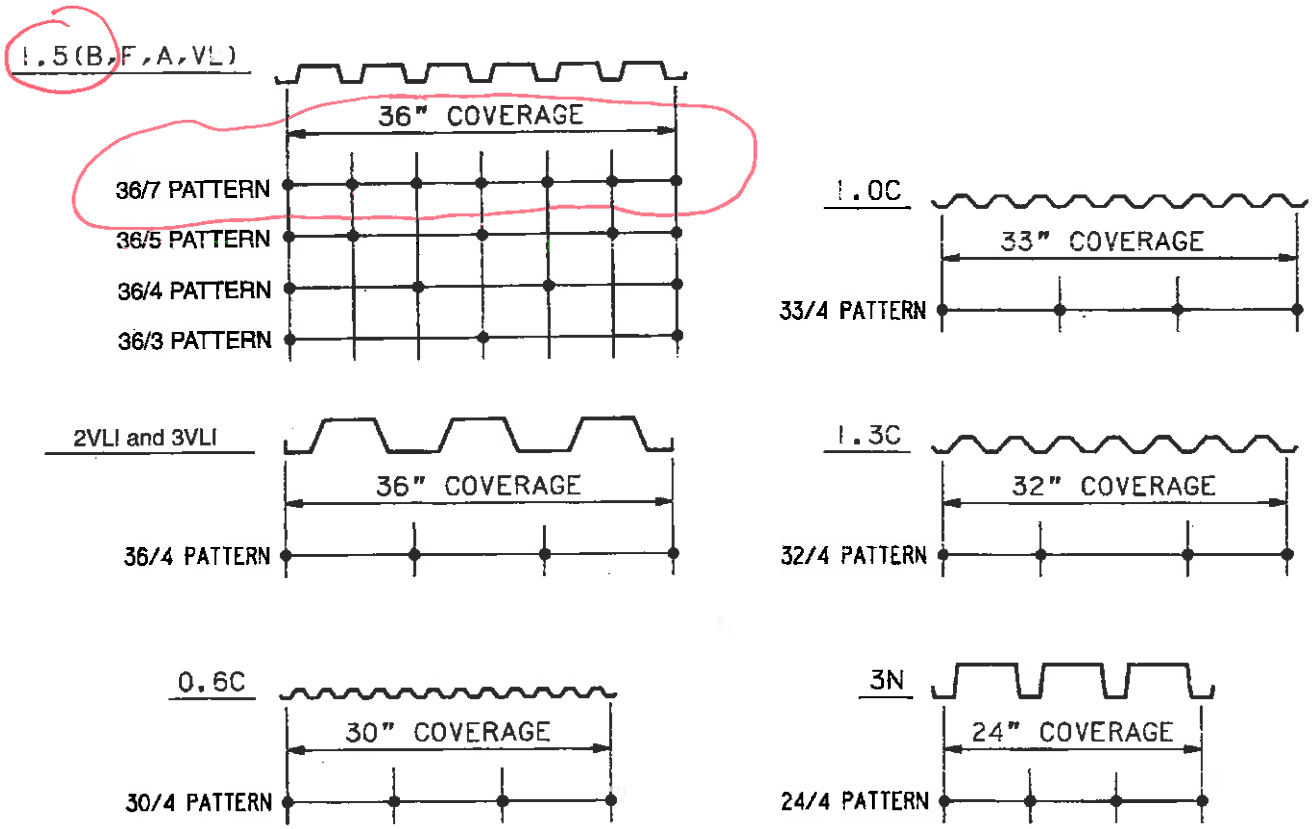

DIAPHRAGM SHEAR STRENGTH AND STIFFNESS DESIGN EXAMPLE

For roof plan shown, calculate the deflection of diaphragm ($\Delta_{\mathbb{C}}$ center line).

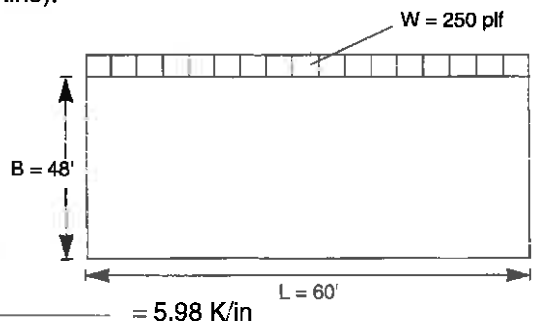

Joist spacing = 5'-0"
Deck: 1.5B 22 (WR) in 15'-0" panels
(3 span condition)
Fasteners: Support – 36/3 pattern
W/ 5/8" puddle welds
Sidelap – 1 #10 TEK

From diaphragm strength tables: $K_1 = 0.617$, $D_B = 2209$, and $K_2 = 870$

$$G' = \frac{K_2}{3.78 + \frac{0.3D_B}{\text{Span}} + 3K_1\,\text{Span}} = \frac{870}{3.78 + \frac{0.3(2209)}{5} + 3(0.617)\,(5)} = 5.98\ \text{K/in}$$

$$\Delta_{\mathbb{C}} = \frac{WL^2}{8xBxG'} = \frac{0.250\,(60)^2}{8\,(48)\,(5.98)} = 0.39\ \text{in}$$

Strength Check

$$R = WL/2 = \frac{250\,(60)}{2} = 7500\ \text{lbs} \qquad S = \frac{7500}{48} = 156\ \text{plf} < 224\ \text{plf (from page 86) OK}$$

1.5 (B, BI, F, A) 20 ALLOWABLE DIAPHRAGM SHEAR STRENGTH (PLF)

SUPPORT FASTENERS: 5/8" puddle welds[1]

SIDELAP FASTENERS: welded[2]

Factor of safety = 2.35

	# OF SIDELAP FASTENERS	DIAPHRAGM SHEAR STRENGTH (PLF) DECK SPAN (FT.-IN.) 3.00	3.50	4.00	4.50	5.00	5.50	6.00	6.50	7.00	7.50	8.00	8.50	9.00	9.50	10.00	K1
	0	581	505	441	390	349	316	288	264	244	226	211	197	185	175	167	0.535
	1	757	665	592	532	482	437	399									0.317
	2	910	808	725	656	598	549	507	469	434	404	377	354	333			0.225
	3	1039	934	845	770	705	650	602	561	524	492	437	387	345	310	279	0.174
	4	1148	1043	952	873	804	744	692	646	570	497	437	387	345	310	279	0.142
36/7	5	1238	1137	1046	966	894	832	776	661	570	497	437	387	345	310	279	0.120
	6	1313	1217	1128	1048	976	912	776	661	570	497	437	387	345	310	279	0.104
	7	1375	1285	1200	1122	1050	924	776	661	570	497	437	387	345	310	279	0.092
	8	1426	1343	1262	1187	1116	924	776	661	570	497	437	387	345	310	279	0.082
	9	1470	1392	1317	1244	1118	924	776	661	570	497	437	387	345	310	279	0.074
	10	1506	1435	1364	1295	1118	924	776	661	570	497	437	387	345	310	279	0.068
				D_B = 97		D_F = 169		D_A = 266			K2= 1056						
	0	514	452	402	361	323	292	266	244	225	209	194	182	171	161	153	0.542
	1	659	589	531	483	441	406	376									0.351
	2	771	701	640	587	542	501	466	436	408	384	361	339	319			0.242
	3	856	790	730	677	629	586	548	514	484	457	432	387	345	310	279	0.184
	4	920	860	804	752	704	661	621	585	553	497	437	387	345	310	279	0.149
36/5	5	968	915	863	814	768	725	686	649	570	497	437	387	345	310	279	0.125
	6	1006	959	912	866	822	781	742	661	570	497	437	387	345	310	279	0.108
	7	1035	993	951	909	868	829	776	661	570	497	437	387	345	310	279	0.094
	8	1058	1021	983	945	907	870	776	661	570	497	437	387	345	310	279	0.084
	9	1076	1043	1009	974	939	905	776	661	570	497	437	387	345	310	279	0.076
	10	1091	1062	1031	1000	967	924	776	661	570	497	437	387	345	310	279	0.069
				D_B = 567		D_F = 663		D_A = 728			K2= 1056						
	0	393	346	309	273	244	220	200	183	168	156	145	135	127	120	114	0.802
	1	530	478	433	395	362	334	310									0.394
	2	626	576	531	491	455	423	395	370	348	328	310	292	275			0.261
	3	693	648	606	567	531	499	469	442	418	396	376	357	340	310	279	0.195
	4	738	700	663	627	593	561	532	504	479	456	434	387	345	310	279	0.156
36/4	5	771	739	706	674	642	612	584	557	532	497	437	387	345	310	279	0.130
	6	794	767	739	710	682	654	627	602	570	497	437	387	345	310	279	0.111
	7	812	788	764	739	713	688	663	639	570	497	437	387	345	310	279	0.097
	8	825	805	784	761	739	716	693	661	570	497	437	387	345	310	279	0.086
	9	835	818	799	780	759	739	718	661	570	497	437	387	345	310	279	0.078
	10	843	828	812	794	776	758	739	661	570	497	437	387	345	310	279	0.071
				D_B = 802		D_F = 909		D_A = 959			K2= 1056						
	0	329	294	265	241	217	196	178	163	150	138	129	120	112	106	101	1.070
	1	427	395	365	338	314	293	274									0.450
	2	484	457	431	407	384	362	342	324	307	292	278	265	253			0.285
	3	517	496	475	454	434	414	395	378	361	345	330	317	304	292	279	0.208
	4	538	522	505	487	470	452	435	419	403	388	374	360	345	310	279	0.164
36/3	5	551	538	525	510	495	480	466	451	436	422	409	387	345	310	279	0.135
	6	560	550	539	527	514	502	489	476	463	450	437	387	345	310	279	0.115
	7	567	558	549	539	529	518	506	495	483	472	437	387	345	310	279	0.100
	8	572	565	557	548	539	530	520	510	500	489	437	387	345	310	279	0.089
	9	575	569	563	555	548	539	531	522	513	497	437	387	345	310	279	0.080
	10	578	573	567	561	554	547	540	532	524	497	437	387	345	310	279	0.072
				D_B = 1652		D_F = 1816		D_A = 1827			K2= 1056						

[1] A 3/8" x 1-1/4" arc seam weld shall be used with F deck or A deck.

[2] The shaded values do not comply with the minimum spacing requirements for sidelap connections and shall not be used except with properly spaced button-punched sidelaps with 1.5BI deck.

$$G' = \frac{K_2}{3.78 + \frac{0.3 * D_X}{SPAN} + 3 * K_1 * SPAN}, \text{ Kips/inch}$$

SPAN is in feet

Substitute D_B, D_F, or D_A for D_X

1.5 (B, F, A) 20 ALLOWABLE DIAPHRAGM SHEAR STRENGTH (PLF)
SUPPORT FASTENERS: 5/8" puddle welds[1]
SIDELAP FASTENERS: #10 TEK screws

Factor of safety = 2.35

	# OF SIDELAP FASTENERS	DIAPHRAGM SHEAR STRENGTH (PLF) DECK SPAN (FT.-IN.) 3.00	3.50	4.00	4.50	5.00	5.50	6.00	6.50	7.00	7.50	8.00	8.50	9.00	9.50	10.00	K1
	0	581	505	441	390	349											0.535
	1	670	585	519	463	414	375	342									0.415
	2	754	662	589	530	480	434	397	365	337	313	293	274	256			0.340
	3	832	735	656	592	538	493	451	415	384	357	333	313	294	279	265	0.287
	4	904	803	720	652	594	545	504	465	431	401	374	351	331	310	279	0.249
36/7	5	971	867	781	709	648	596	551	512	477	444	415	387	345	310	279	0.219
	6	1032	927	839	764	700	645	597	556	520	488	437	387	345	310	279	0.196
	7	1089	983	893	816	749	692	642	596	560	497	437	387	345	310	279	0.178
	8	1140	1036	944	866	797	738	686	640	570	497	437	387	345	310	279	0.162
	9	1187	1084	993	913	843	782	728	661	570	497	437	387	345	310	279	0.149
	10	1230	1129	1038	957	886	824	769	661	570	497	437	387	345	310	279	0.138

D_B = 97 D_F = 169 D_A = 266 K2= 1056

	0	514	452	402	361	323											0.642
	1	589	523	469	423	386	351	320									0.477
	2	656	587	529	481	439	404	374	344	318	296	276	259	243			0.380
	3	715	645	585	534	490	452	420	391	365	339	317	297	280	265	251	0.315
	4	767	697	637	584	538	498	463	433	405	381	358	336	316	299	279	0.270
36/5	5	812	744	683	630	583	541	505	472	443	418	394	374	345	310	279	0.236
	6	852	786	726	672	624	582	544	510	480	453	428	387	345	310	279	0.209
	7	886	823	764	711	663	620	581	546	515	486	437	387	345	310	279	0.188
	8	916	856	799	747	699	656	616	580	548	497	437	387	345	310	279	0.171
	9	942	885	830	779	732	689	649	613	570	497	437	387	345	310	279	0.156
	10	965	911	858	809	763	720	680	644	570	497	437	387	345	310	279	0.144

D_B = 567 D_F = 663 D_A = 728 K2= 1056

	0	393	346	309	273	244											0.802
	1	466	415	373	338	308	279	254									0.561
	2	528	476	431	393	360	332	308	284	262	243	227	212	199			0.431
	3	580	528	482	443	408	378	352	328	308	287	268	251	236	223	212	0.350
	4	623	573	528	488	452	420	392	368	345	326	308	289	272	258	245	0.294
36/4	5	659	612	568	528	492	459	430	404	381	360	341	323	308	292	277	0.254
	6	689	645	603	563	528	495	466	439	414	392	372	354	337	310	279	0.224
	7	715	673	633	595	560	528	498	471	446	423	402	383	345	310	279	0.200
	8	736	697	659	623	589	557	528	500	475	452	430	387	345	310	279	0.180
	9	753	718	682	648	615	584	555	527	502	479	437	387	345	310	279	0.164
	10	768	736	702	670	638	608	580	553	527	497	437	387	345	310	279	0.151

D_B = 802 D_F = 909 D_A = 959 K2= 1056

	0	329	294	265	241	217											1.070
	1	384	349	319	292	269	249	232									0.679
	2	426	393	363	336	312	291	272	255	240	225	210	197	185			0.498
	3	458	428	400	374	350	328	308	290	274	260	246	234	221	209	199	0.393
	4	482	455	429	405	381	360	340	322	305	290	276	263	251	240	230	0.324
36/3	5	501	477	454	431	408	388	368	350	333	317	303	289	277	265	255	0.276
	6	516	495	473	452	431	412	393	375	358	342	328	314	301	289	278	0.240
	7	527	509	489	470	451	432	414	397	380	365	350	336	323	310	279	0.213
	8	537	520	503	485	467	450	433	416	400	365	371	357	344	310	279	0.191
	9	544	529	514	498	481	465	449	433	418	403	389	376	345	310	279	0.173
	10	550	537	523	508	493	478	463	448	434	419	406	387	345	310	279	0.158

D_B = 1652 D_F = 1816 D_A = 1827 K2= 1056

[1] A 3/8" x 1-1/4" arc seam weld shall be used with F deck or A deck.

$$G' = \frac{K_2}{3.78 + \frac{0.3 * D_X}{SPAN} + 3 * K_1 * SPAN}, \text{ Kips/inch}$$

SPAN is in feet

Substitute D_B, D_F, or D_A for D_X

DIAPHRAGM

1.5 (B, F, A) 20 ALLOWABLE DIAPHRAGM SHEAR STRENGTH (PLF)
SUPPORT FASTENERS: #12 TEK screws
SIDELAP FASTENERS: #10 TEK screws

Factor of safety = 2.35

	# OF SIDELAP FASTENERS	DIAPHRAGM SHEAR STRENGTH (PLF) DECK SPAN (FT.-IN.) 3.00	3.50	4.00	4.50	5.00	5.50	6.00	6.50	7.00	7.50	8.00	8.50	9.00	9.50	10.00	K1
	0	343	298	261	230	206											0.605
	1	430	377	335	301	272	246	224									0.456
	2	508	450	402	363	331	303	279	257	237	221	206	193	182			0.366
	3	576	515	464	421	385	354	328	305	284	264	247	232	218	207	196	0.306
	4	636	573	520	475	436	402	373	348	325	306	288	270	255	241	229	0.263
36/7	5	687	625	571	524	483	448	417	389	365	343	324	306	291	276	262	0.230
	6	730	671	617	569	527	490	458	428	402	379	358	340	323	307	279	0.205
	7	768	710	658	611	568	530	496	466	438	414	392	372	345	310	279	0.185
	8	800	745	694	648	605	567	532	501	473	447	424	387	345	310	279	0.168
	9	827	776	727	681	639	601	566	534	505	478	437	387	345	310	279	0.154
	10	851	803	756	712	671	632	597	565	536	497	437	387	345	310	279	0.142

D_B = 97 D_F = 169 D_A = 266 K2= 1056

0	304	267	238	213	191											0.726
1	376	335	302	274	250	230	211									0.522
2	435	393	358	327	301	278	258	241	225	210	197	184	173			0.408
3	482	441	406	374	346	322	300	281	264	248	235	222	210	199	189	0.334
4	519	481	446	415	387	361	338	318	299	283	268	254	242	230	220	0.283
36/5 5	548	513	481	450	422	396	373	352	333	315	299	284	271	259	247	0.246
6	572	540	509	480	453	428	404	383	363	345	328	313	299	286	274	0.217
7	590	562	534	506	480	455	432	411	391	372	355	339	325	310	279	0.195
8	606	580	554	528	504	480	457	436	416	398	380	364	345	310	279	0.176
9	618	595	571	547	524	501	480	459	440	421	404	387	345	310	279	0.161
10	628	607	586	564	542	520	500	480	460	442	425	387	345	310	279	0.148

D_B = 567 D_F = 663 D_A = 728 K2= 1056

0	232	205	182	161	144											0.907
1	301	270	244	222	204	188	173									0.610
2	353	323	296	272	251	233	217	203	191	179	167	157	148			0.459
3	391	363	337	313	292	273	256	240	227	214	203	192	183	174	165	0.368
4	419	394	370	347	327	307	290	274	259	246	233	222	212	203	194	0.307
36/4 5	439	418	396	375	355	337	319	303	288	274	261	250	239	229	219	0.264
6	455	436	417	397	379	361	344	329	314	300	287	275	263	253	243	0.231
7	467	450	433	416	399	382	366	351	336	323	310	297	286	275	265	0.206
8	476	461	446	431	415	400	385	370	356	343	330	318	306	295	279	0.185
9	483	471	457	443	429	415	401	387	373	361	348	336	325	310	279	0.168
10	489	478	466	453	440	427	414	401	389	376	364	353	341	310	279	0.154

D_B = 802 D_F = 909 D_A = 959 K2= 1056

0	194	174	156	142	128											1.209
1	245	225	207	191	177	165	154									0.733
2	276	259	243	226	214	201	190	179	169	160	152	145	138			0.526
3	297	283	269	255	242	230	219	208	198	189	180	172	165	158	152	0.410
4	310	299	287	275	264	253	242	232	222	213	204	196	188	181	174	0.336
36/3 5	319	310	300	290	280	270	260	251	241	233	224	216	208	201	194	0.285
6	325	318	310	301	292	284	275	266	257	249	241	233	226	219	212	0.247
7	330	324	317	310	302	294	286	278	271	263	255	248	241	234	227	0.216
8	334	328	322	316	309	303	296	289	281	274	267	260	254	247	241	0.195
9	336	332	327	321	315	309	303	297	290	284	277	271	265	258	252	0.177
10	338	334	330	325	320	315	309	304	298	292	286	280	274	268	262	0.161

D_B = 1652 D_F = 1816 D_A = 1827 K2= 1056

$$G' = \frac{K_2}{3.78 + \frac{0.3 * D_X}{SPAN} + 3 * K_1 * SPAN}, \text{ Kips/inch}$$

SPAN is in feet

Substitute D_B, D_F, or D_A for D_X

B-15C

TEKS Self-Drilling Fasteners

Product Report No. 02703

Selector Guide

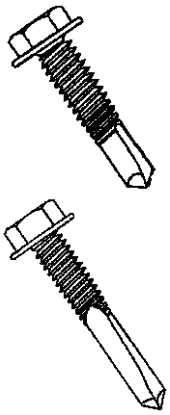

Part Number	Description	Head Style	Drill Point	Drill & Tap Capacity	Max. Material Attachment	Box Qty
1088000	12-24 x 7/8"	HWH	#4	.125-.250	.325	5,000
1414000	12-24 x 1-1/4"	HWH	#4.5	.125-.375	.575	4,000
1006000	12-24 x 1-1/4"	HWH	#5	.125-.500	.375	4,000
1070000	12-24 x 1-1/2"	HWH	#5	.125-.500	.625	2,500
1071000	12-24 x 1-1/2"	**HWH	#5	.125-.500	.625	2,500
1072000	12-24 x 2"	HWH	#5	.125-.500	1.125	2,000
1074000	1/4-28 x 3"	*HWH	#5	.125-.500	2.150	1,000
1075000	1/4-28 x 4"	*HWH	#5	.125-.500	3.150	500
1641000	1/4-28 x 5"	HWH	#5	.125-.500	4.150	250
1431000	1/4-28 x 6"	HWH	#5	.125-.500	5.150	250
1590000	1/4-28 x 8"	HWH	#5	.125-.500	7.150	150

Applications

- Metal deck, clips, liner panels or accessories to structural steel or bar joist.
- Longer fasteners can be used in retrofit clip and sheet applications.

All available with bonded washer.

* 5/16" Across Flats HWH ** 3/8" Across Flats HWH

Performance Data

PULLOUT VALUES (average lbs. ultimate)

Fastener		Steel Gauge				
Dia.	Pt.	16	14	12	3/16	1/4
12	4	-	-	1532	3485	3844
	4.5	-	-	1508	3865	4101
	5	-	-	1527	3701	3999
1/4	5	-	-	1507	3300	5059

FASTENER VALUES

Fastener (dia-tpi)	Tensile (lbs. min.)	Shear (avg. lbs. ult.)	Torque (min. in. lbs.)
12-24 T/4	3020	2100	100
12-24 T/4.5	3020	2100	100
12-24 T/5	3020	2100	100
1/4-28 T/5	5577	3310	234

SHEET STEEL GAUGES

Gauge No.	12	14	16	18	20	22	24	26
Decimal Equivalent	.105"	.075"	.060"	.048"	.036"	.030"	.024"	.018"

SHEAR VALUES (average lbs. ultimate)

Fastener		Steel Gauge (lapped)				
Dia.	Pt.	16	14	12	1/8	1/4
12	4	-	-	2048	2030	-
	4.5	-	-	2641	2887	2897
	5	-	-	2650	2700	2762
1/4	5	1597	2005	2350	2792	3310

Note: Teks fasteners are not categorized as structural bolts. Proper design criteria and strengths must be used for satisfactory application. The values listed are ultimate averages achieved under laboratory conditions and apply to Buildex manufactured fasteners only. Appropriate safety factors should be applied to these values for design purposes.

Installation Guidelines

- A standard screwgun with a depth sensitive nosepiece should be used to install Teks. For optimal fastener performance, the screwgun should be a minimum of 6 amps and have an RPM range of 0-2500. (Maximum 1800 RPM is recommended for Teks 5 fasteners)
- Adjust the screwgun nosepiece to properly seat the fastener.
- New magnetic sockets must be correctly set before use. Remove chip build-up as needed.
- The fastener is fully seated when the head is flush with the work surface.
- Overdriving may result in torsional failure of the fastener or stripout of the substrate.
- The fastener must penetrate beyond the metal structure a minimum of 3 pitches of thread.

ITW Buildex
1349 West Bryn Mawr Avenue
Itasca, Illinois 60143
630-595-3500 Fax: 630-595-3549
www.itwbuildex.com

Teks® and Climaseal® are trademarks of ITW Buildex and Illinois Tool Works, Inc.

© 2010 ITW Buildex and Illinois Tool Works, Inc.

Buildex

TEKS®

Self-Drilling Fasteners

First in performance!! Over 40 years of consistent drilling.

The original self-drillers for heavy duty applications.

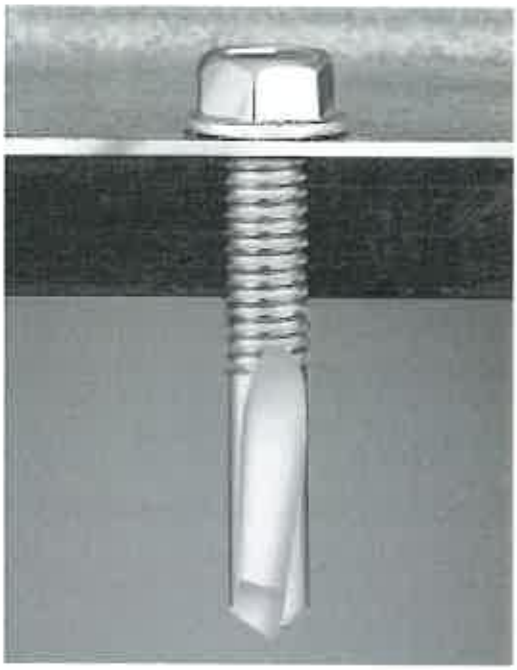

Applications

- Metal deck to structural steel or bar joist.
- Clips to structural steel or bar joist.
- Liner panels to structural steel or bar joist.
- Accessories to structural steel or bar joist.
- Longer length fasteners can be used in retrofit clip and sheet applications.

Product Features

- Unique double fluted point has precise cutting edges to improve drill performance in 1/4" thru 1/2" steel.
- Engineered for fast drilling and smooth tapping with less effort.
- Climaseal® finish provides excellent corrosion resistance and lower tapping torque.
- Attachments up to 7.2" of material including 1/2" steel.
- 1/4 Diameter has notched threads to reduce tapping torque.

Product Specifications

Diameter.....#12, 1/4
Thread Form.....12-24, 1/4-28
Head Style.....#12: 5/16" HWH
1/4: 5/16" HWH
1/4: 3/8" HWH
Drill Point.....Teks 4
Teks 4.5
Teks 5
Finish.....Climaseal

Head Style

Hex Washer Head

Approvals and Listings

Factory Mutual (J.I. 2 X 9A2 AM), ICC ER-3056, ICC ESR-1976

ARCADIS

SUBJECT: TOPOK
PARKING CANOPY
JOB NO:

BY: CMW DATE: 11/25/14
CHKD: MSL DATE: 12/9/14

PAGE B16
SHEET

DL MAX

$\frac{(3C10\times15.3+2L3\times3\times14)}{18F\ W\ 85C}$ + $\frac{2C10\times15.3\times12'6"}{20FT\times18F\times12"}$ + $\frac{(2L3\times3\times14)}{}$ = 3.09 psf + 1.51 psf = 4.6 psf

SEISMIC : (10.2 + 10) PSF × 0.07 = 1.42 PSF

12.5 psf 4.6 psf 1.20

44.7#/FT ULTIMATE WIND FASCIA LOAD (SHT B-5 & B5A)

22.4 PSF > 1.42 PSF ∴ WIND CONTROLS LATERAL ✓

1.20

LOADS

(10" + 1.5" DECK + 4.5" SLOPE) × 33.5 psf

ROOF MEMBER DESIGN:

LOAD CASE 3 (LRFD) = 1.2DL + 1.6L_R + 0.5W

LOAD CASE 4 (LRFD) = 1.2DL + 1.0W + L

LOAD CASE 6 (LRFD) = 0.9D + 1.0W

- SEE RISA ANALYSIS FOR LOADS ON ROOF PURLINS

- TRIB WIDTH = 20'-0"

DL (TOTAL)	20.2 PSF × 20'-0" =	404 #/FT	UNFACTORED LOADS INPUT TO RISA
LIVE LOAD	20 PSF × 20'-0" =	400 #/FT	
WIND	22.8 PSF × 20'-0" =	456 #/FT	
DL (UPLIFT)	10.2 PSF × 20'-0" =	204 #/FT	

FROM B17: MAX PER FOOT R_x = 0.295 #/FT (FACTORED)

([(12.5 psf ROOF SOLAR DL & DECK DL) + 4.6 psf ROOF UNDERFRAMING DL] × 116' × 18') + (12 × 10'-8" × 19#/FT) = 38137# × (C_s = 0.07) = 2.67K ← SHOW 2750# ON DWGS

35705#

2432#

AGM Form 30 12-01

B-17

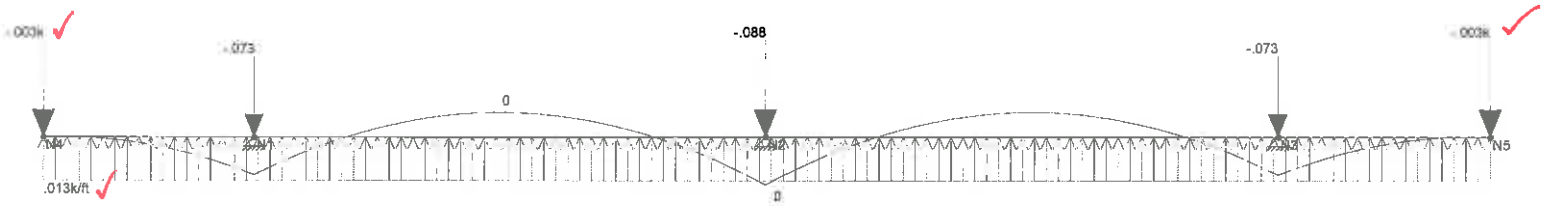

UNFACTORED

Loads: LC 1, 0.6D + 0.6W
Results for LC 1, 0.6D + 0.6W
Member Bending Moments (k-ft)
Y-direction Reaction units are k and k-ft

ARCADIS	Topok Parking Canopy Structure	SK - 1
Matt Lotycz		Dec 9, 2014 at 9:38 AM
		ROOF LOADS_COMPONENTS AND CLADDIN

Beam: ***M1***

Shape: **C12x20.7**
Material: **A36 Gr.36**
Length: **18 ft**
I Joint: **N4**
J Joint: **N5**
LC 1: 0.6D + 0.6W UNFACTORED
Code Check: **No Calc**
Report Based On 97 Sections

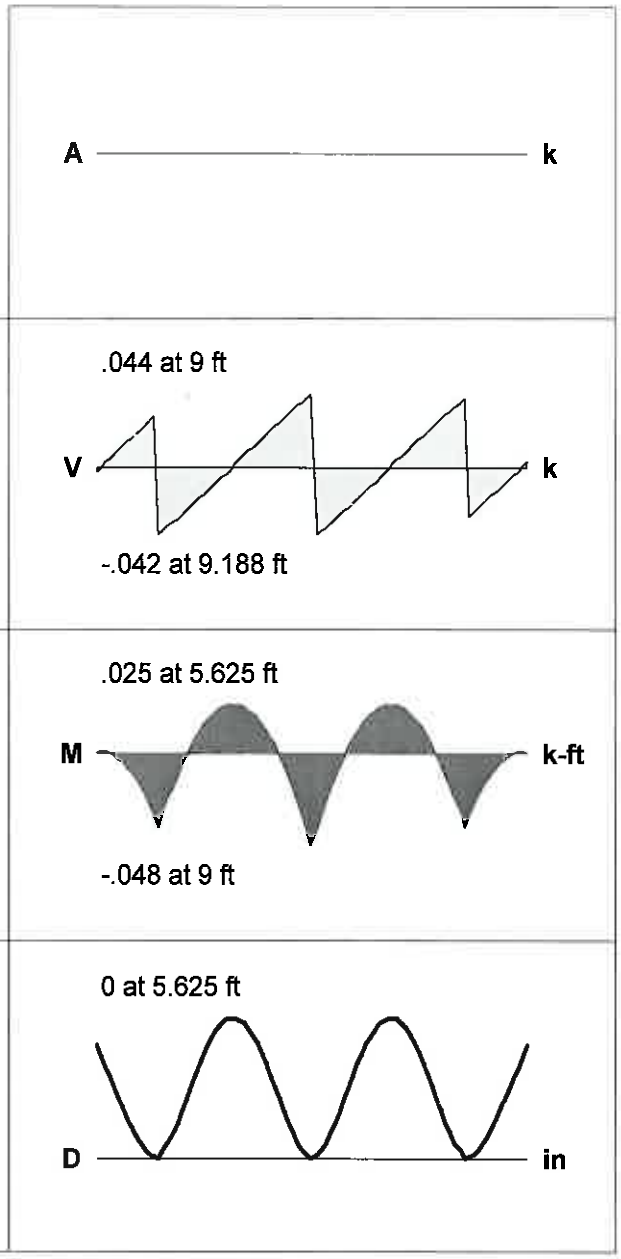

AISC 14th(360-10): ASD Code Check
Direct Analysis Method

- P-Delta analysis required for all AISC 360-10 Load Combinations -

Max Defl Ratio **L/10000**

Joint Coordinates and Temperatures

	Label	X [ft]	Y [ft]	Temp [F]
1	N1	2.625	0	0
2	N2	9	0	0
3	N3	15.375	0	0
4	N4	0	0	0
5	N5	18	0	0

Joint Loads and Enforced Displacements (BLC 1 : DEAD LOAD (TOTAL))

	Joint Label	L,D,M	Direction	Magnitude[(k,k-ft), (in,rad), (k*s^2/ft...
1	N4	L	Y	-.005
2	N5	L	Y	-.005

Joint Loads and Enforced Displacements (BLC 5 : DEAD LOAD (NO SOLAR))

	Joint Label	L,D,M	Direction	Magnitude[(k,k-ft), (in,rad), (k*s^2/ft...
1	N4	L	Y	-.005
2	N5	L	Y	-.005

Member Distributed Loads (BLC 1 : DEAD LOAD (TOTAL))

	Member Label	Direction	Start Magnitude[k/ft,F]	End Magnitude[k/ft,F]	Start Location[ft,%]	End Location[ft,%]
1	M1	Y	-.013	-.013	0	%100

Member Distributed Loads (BLC 2 : LIVE LOAD)

	Member Label	Direction	Start Magnitude[k/ft,F]	End Magnitude[k/ft,F]	Start Location[ft,%]	End Location[ft,%]
1	M1	Y	-.02	-.02	0	%100

Member Distributed Loads (BLC 3 : WIND)

	Member Label	Direction	Start Magnitude[k/ft,F]	End Magnitude[k/ft,F]	Start Location[ft,%]	End Location[ft,%]
1	M1	Y	-.024	-.024	0	%100

Member Distributed Loads (BLC 4 : WIND (UPLIFT))

	Member Label	Direction	Start Magnitude[k/ft,F]	End Magnitude[k/ft,F]	Start Location[ft,%]	End Location[ft,%]
1	M1	Y	.024	.024	0	%100

Member Distributed Loads (BLC 5 : DEAD LOAD (NO SOLAR))

	Member Label	Direction	Start Magnitude[k/ft,F]	End Magnitude[k/ft,F]	Start Location[ft,%]	End Location[ft,%]
1	M1	Y	-.002	-.002	0	%100

Basic Load Cases

	BLC Description	Category	X Gravity	Y Gravity	Joint	Point	Distributed
1	DEAD LOAD (TOTAL)	None			2		1
2	LIVE LOAD	None					1
3	WIND	None					1
4	WIND (UPLIFT)	None					1
5	DEAD LOAD (NO SOLAR)	None			2		1

Load Combination Design

	Description	ASIF	CD	ABIF	Service	Hot Rolled	Cold Form...	Wood	Concrete	Masonry	Footings	Aluminum
1	0.6D + 0.6W					Yes	Yes	Yes	Yes	Yes	Yes	Yes
2	D + Lr					Yes	Yes	Yes	Yes	Yes	Yes	Yes

Load Combination Design (Continued)

	Description	ASIF	CD	ABIF	Service	Hot Rolled	Cold Form...	Wood	Concrete	Masonry	Footings	Aluminum
3	D + 0.75(0.6...					Yes	Yes	Yes	Yes	Yes	Yes	Yes
4	0.9D+1.0W					Yes	Yes	Yes	Yes	Yes	Yes	Yes
5	1.2D+1.6Lr+...					Yes	Yes	Yes	Yes	Yes	Yes	Yes
6	DL max					Yes	Yes	Yes	Yes	Yes	Yes	Yes
7	DL min (w/o ...					Yes	Yes	Yes	Yes	Yes	Yes	Yes
8	Lr					Yes	Yes	Yes	Yes	Yes	Yes	Yes
9	W+					Yes	Yes	Yes	Yes	Yes	Yes	Yes
10	W- (uplift)					Yes	Yes	Yes	Yes	Yes	Yes	Yes

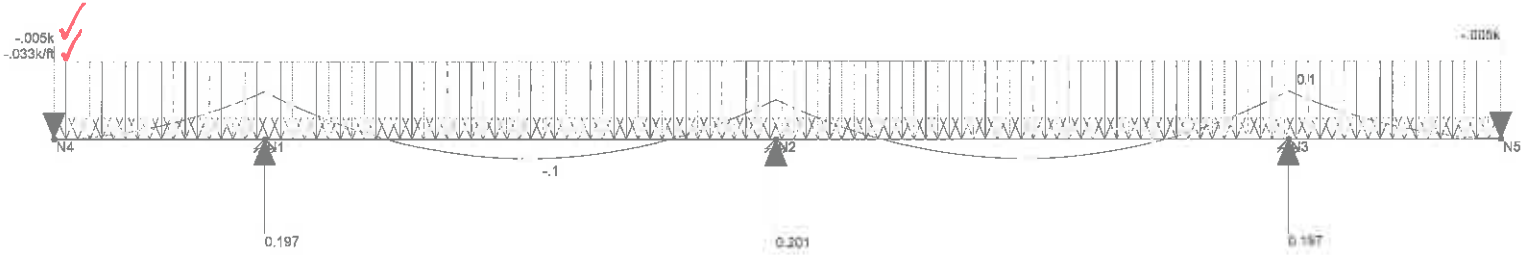

UNFACTORED

Loads: LC 2, D + Lr
Results for LC 2, D + Lr
Member Bending Moments (k-ft)
Y-direction Reaction units are k and k-ft

ARCADIS		SK - 2
Matt Lotycz	Topok Parking Canopy Structure	Dec 9, 2014 at 9:39 AM
		ROOF LOADS_COMPONENTS AND CLADDIN...

Beam: ***M1***

Shape: **C12x20.7**
Material: **A36 Gr.36**
Length: **18 ft**
I Joint: **N4**
J Joint: **N5**
LC 2: D + Lr UNFACTORED
Code Check: **No Calc**
Report Based On 97 Sections

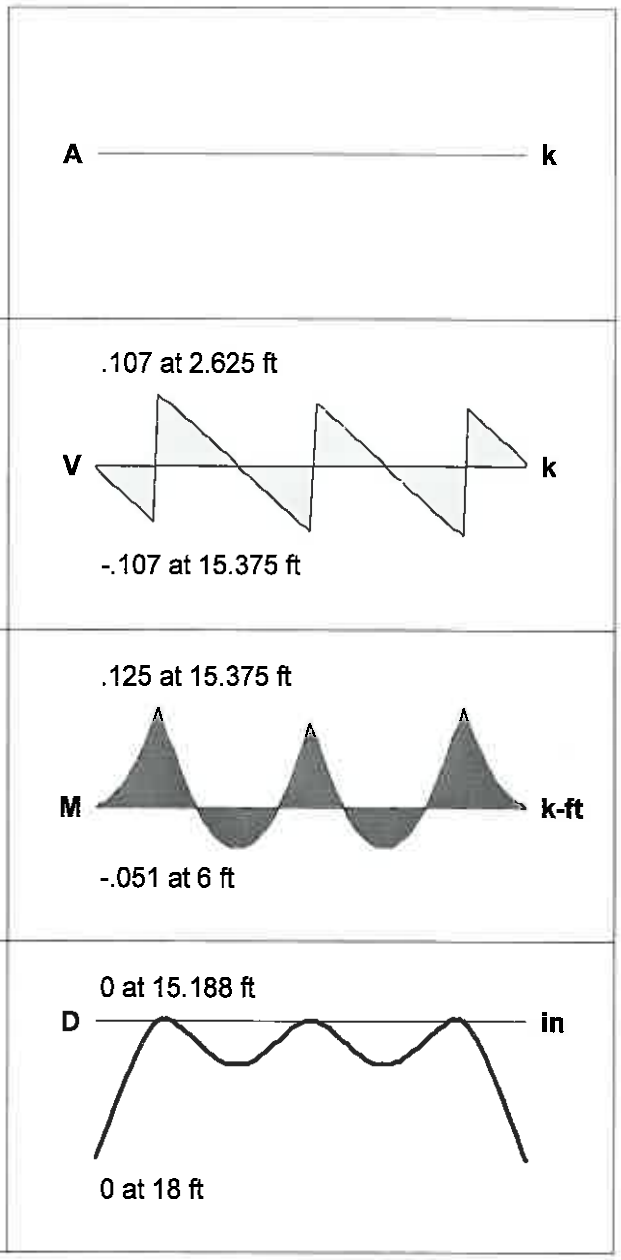

AISC 14th(360-10): ASD Code Check
Direct Analysis Method

- P-Delta analysis required for all AISC 360-10 Load Combinations -

Max Defl Ratio **L/10000**

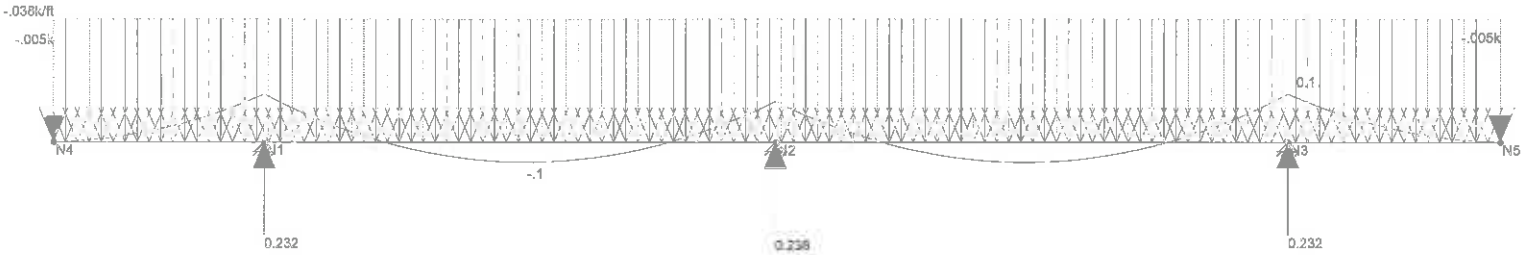

Loads: LC 3, D + 0.75(0.6W+Lr)
Results for LC 3, D + 0.75(0.6W+Lr)
Member Bending Moments (k-ft)
Y-direction Reaction units are k and k-ft

UNFACTORED

ARCADIS		SK - 3
Matt Lotycz	Topok Parking Canopy Structure	Dec 9, 2014 at 9:40 AM
		ROOF LOADS_COMPONENTS AND CLADDIN.

Beam: ***M1***

Shape: **C12x20.7**
Material: **A36 Gr.36**
Length: **18 ft**
I Joint: **N4**
J Joint: **N5**
LC 3: D + 0.75(0.6W+Lr) UNFACTORED
Code Check: **No Calc**
Report Based On 97 Sections

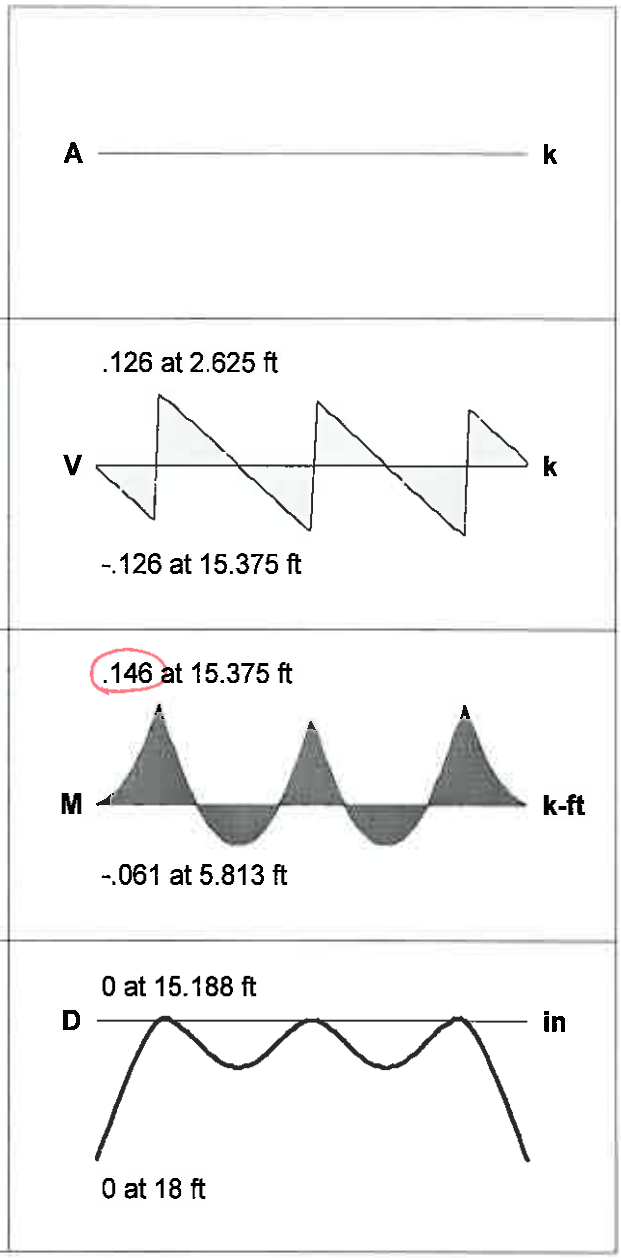

AISC 14th(360-10): ASD Code Check
Direct Analysis Method

- P-Delta analysis required for all AISC 360-10 Load Combinations -

Max Defl Ratio **L/10000**

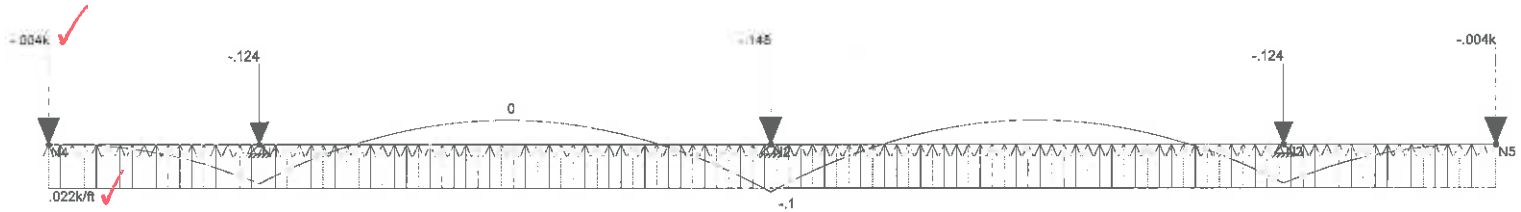

FACTORED

Loads: LC 4, 0.9D+1.0W
Results for LC 4, 0.9D+1.0W
Member Bending Moments (k-ft)
Y-direction Reaction units are k and k-ft

ARCADIS		SK - 4
Matt Lotycz	Topok Parking Canopy Structure	Dec 9, 2014 at 9:40 AM
		ROOF LOADS_COMPONENTS AND CLADDIN

Beam: ***M1***

Shape: **C12x20.7**
Material: **A36 Gr.36**
Length: **18 ft**
I Joint: **N4**
J Joint: **N5**
LC 4: 0.9D+1.0W FACTORED
Code Check: **No Calc**
Report Based On 97 Sections

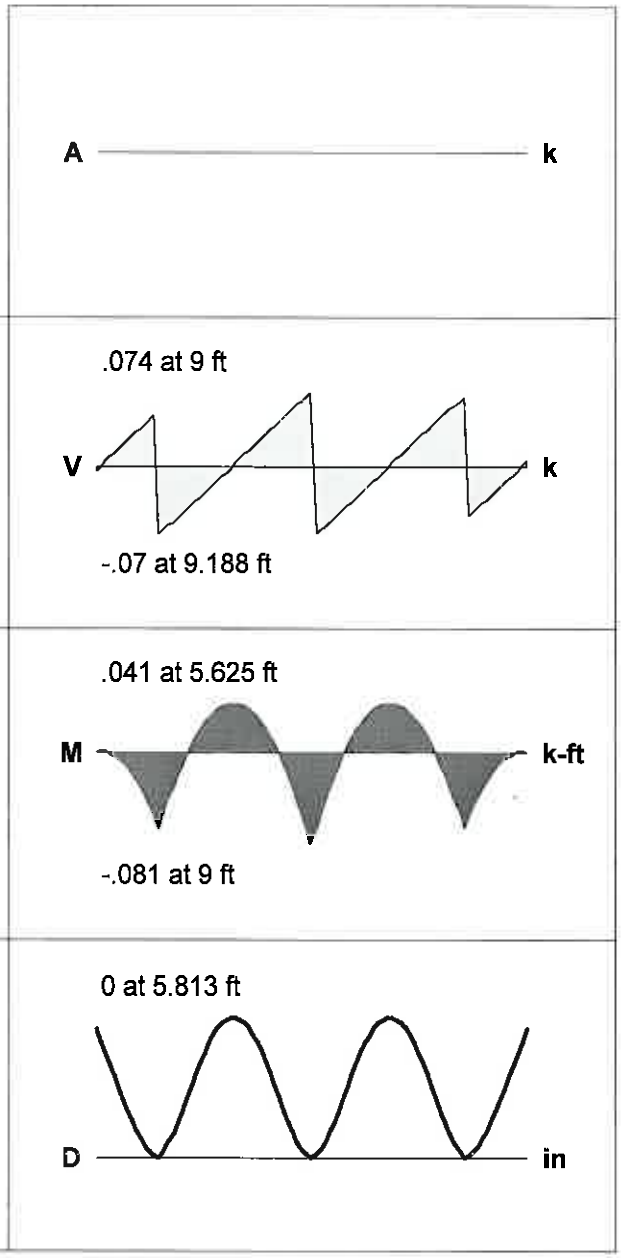

AISC 14th(360-10): ASD Code Check
Direct Analysis Method

- P-Delta analysis required for all AISC 360-10 Load Combinations -

Max Defl Ratio **L/10000**

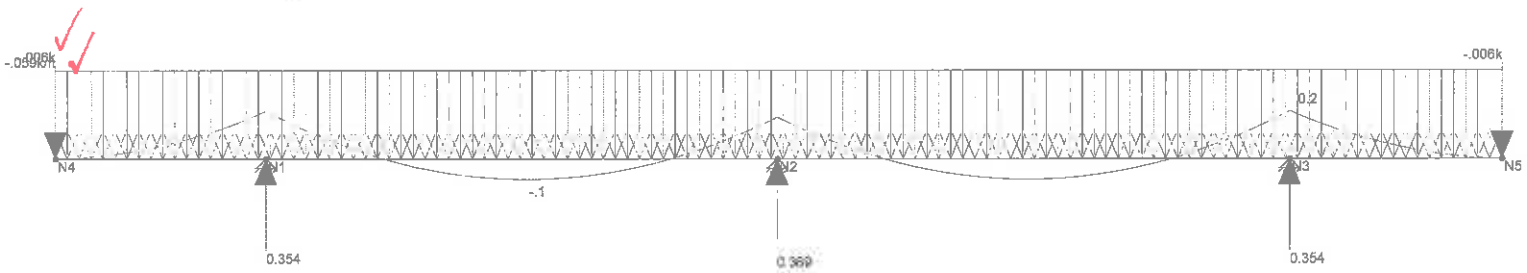

Loads: LC 5, 1.2D+1.6Lr+0.5W
Results for LC 5, 1.2D+1.6Lr+0.5W
Member Bending Moments (k-ft)
Y-direction Reaction units are k and k-ft

FACTORED

ARCADIS		SK - 5
Matt Lotycz	Topok Parking Canopy Structure	Dec 9, 2014 at 9:40 AM
		ROOF LOADS_COMPONENTS AND CLADDIN...

Beam: ***M1***

Shape: **C12x20.7**
Material: **A36 Gr.36**
Length: **18 ft**
I Joint: **N4**
J Joint: **N5**
LC 5: 1.2D+1.6Lr+0.5W FACTORED
Code Check: **No Calc**
Report Based On 97 Sections

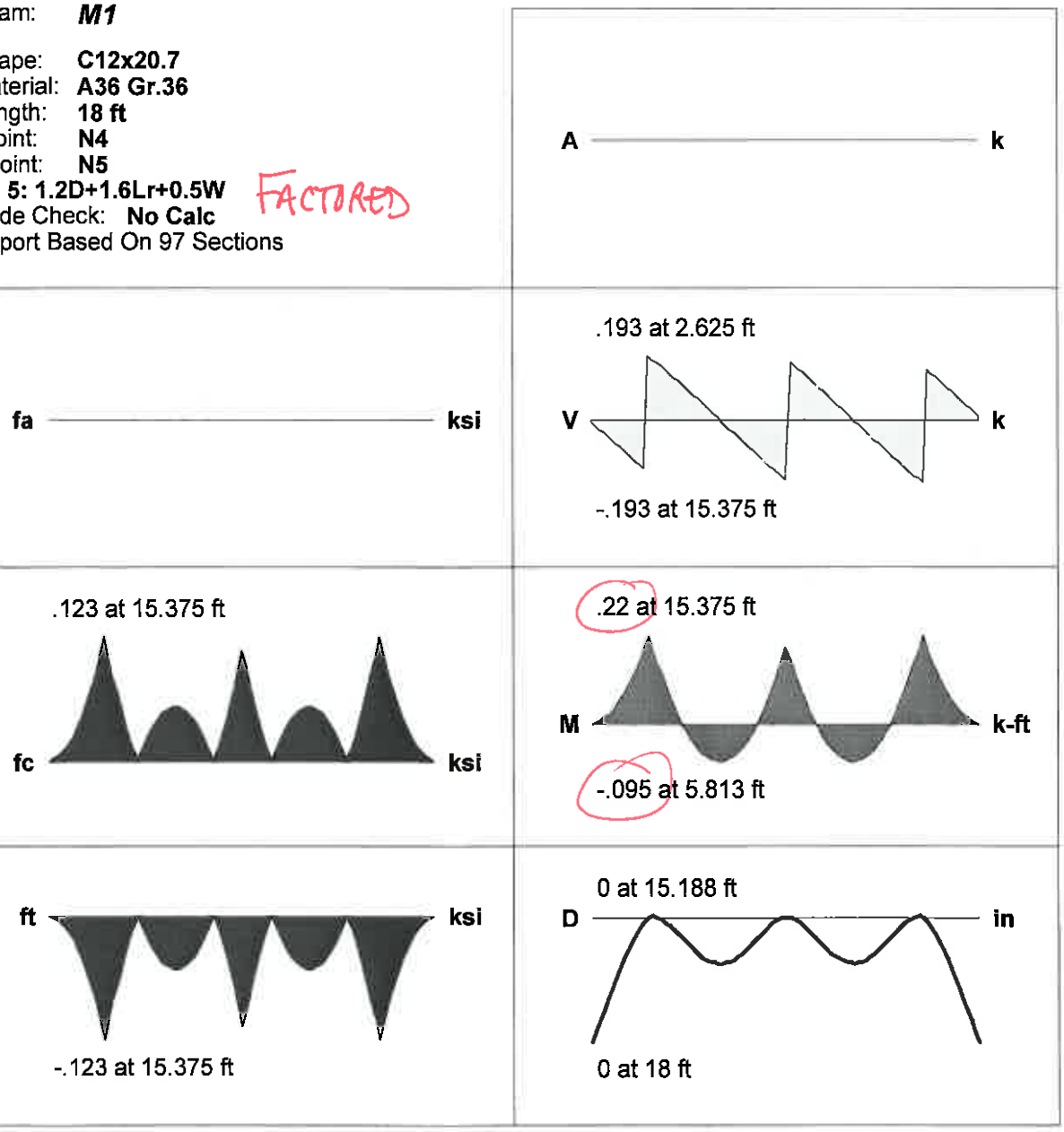

AISC 14th(360-10): ASD Code Check
Direct Analysis Method

- P-Delta analysis required for all AISC 360-10 Load Combinations -

Max Defl Ratio **L/10000**

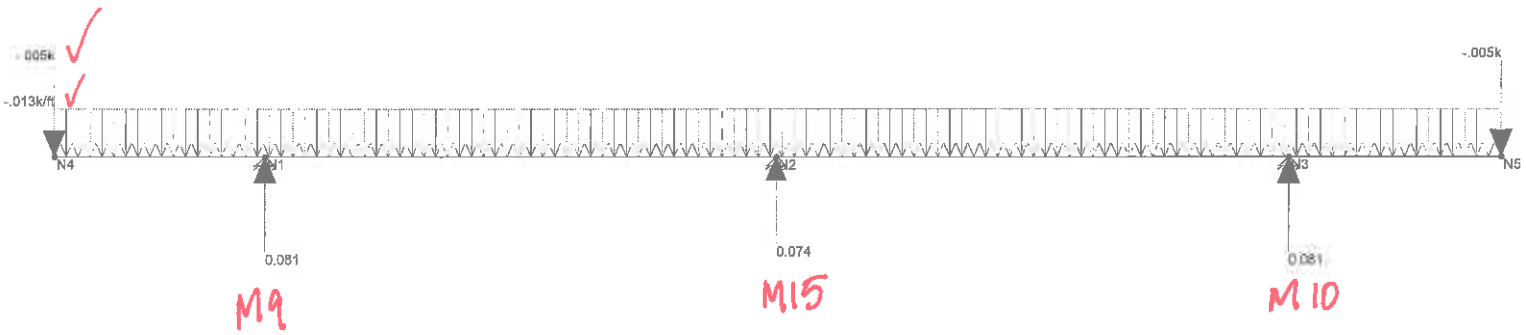

Loads: LC 6, DL max
Results for LC 6, DL max
Y-direction Reaction units are k and k-ft

ARCADIS	Topok Parking Canopy Structure	SK - 6
Matt Lotycz		Dec 9, 2014 at 9:42 AM
		ROOF LOADS_COMPONENTS AND CLADDIN...

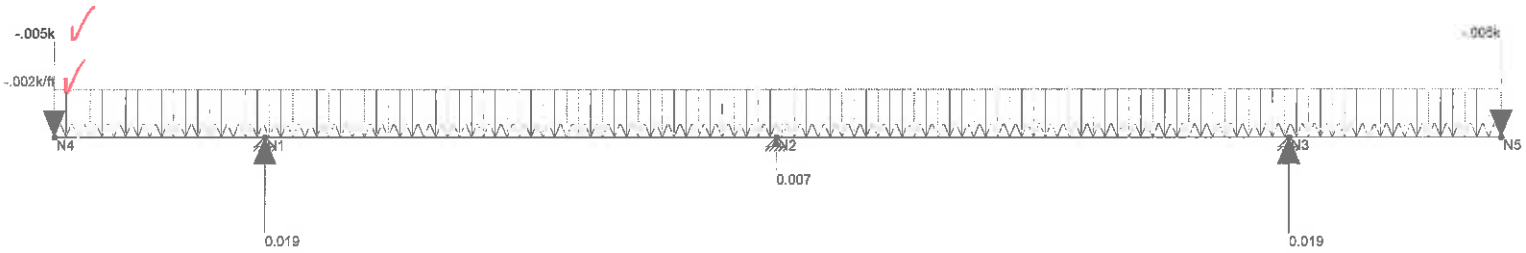

Loads: LC 7, DL min (w/o solar)
Results for LC 7, DL min (w/o solar)
Y-direction Reaction units are k and k-ft

ARCADIS	Topok Parking Canopy Structure	SK - 7
Matt Lotycz		Dec 9, 2014 at 9:42 AM
		ROOF LOADS_COMPONENTS AND CLADDIN

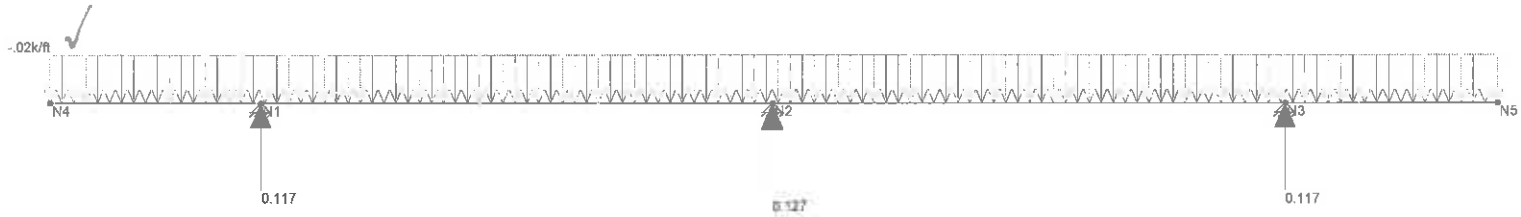

Loads: LC 8, Lr
Results for LC 8, Lr
Y-direction Reaction units are k and k-ft

ARCADIS		SK - 8
Matt Lotycz	Topok Parking Canopy Structure	Dec 9, 2014 at 9:42 AM
		ROOF LOADS_COMPONENTS AND CLADDIN...

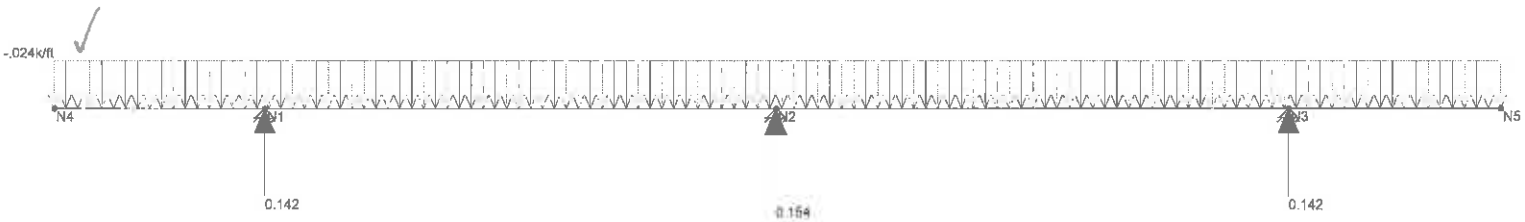

Loads: LC 9, W+
Results for LC 9, W+
Y-direction Reaction units are k and k-ft

ARCADIS		SK - 9
Matt Lotycz	Topok Parking Canopy Structure	Dec 9, 2014 at 9:42 AM
		ROOF LOADS_COMPONENTS AND CLADDIN...

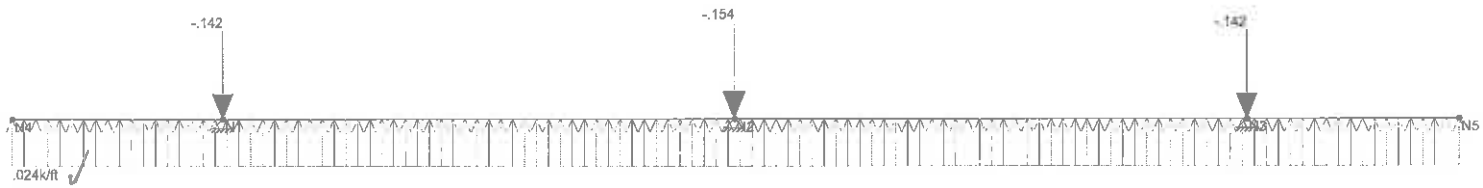

Loads: LC 10, W- (uplift)
Results for LC 10, W- (uplift)
Y-direction Reaction units are k and k-ft

ARCADIS	Topok Parking Canopy Structure	SK - 10
Matt Lotycz		Dec 9, 2014 at 9:43 AM
		ROOF LOADS_COMPONENTS AND CLADDIN...

B18

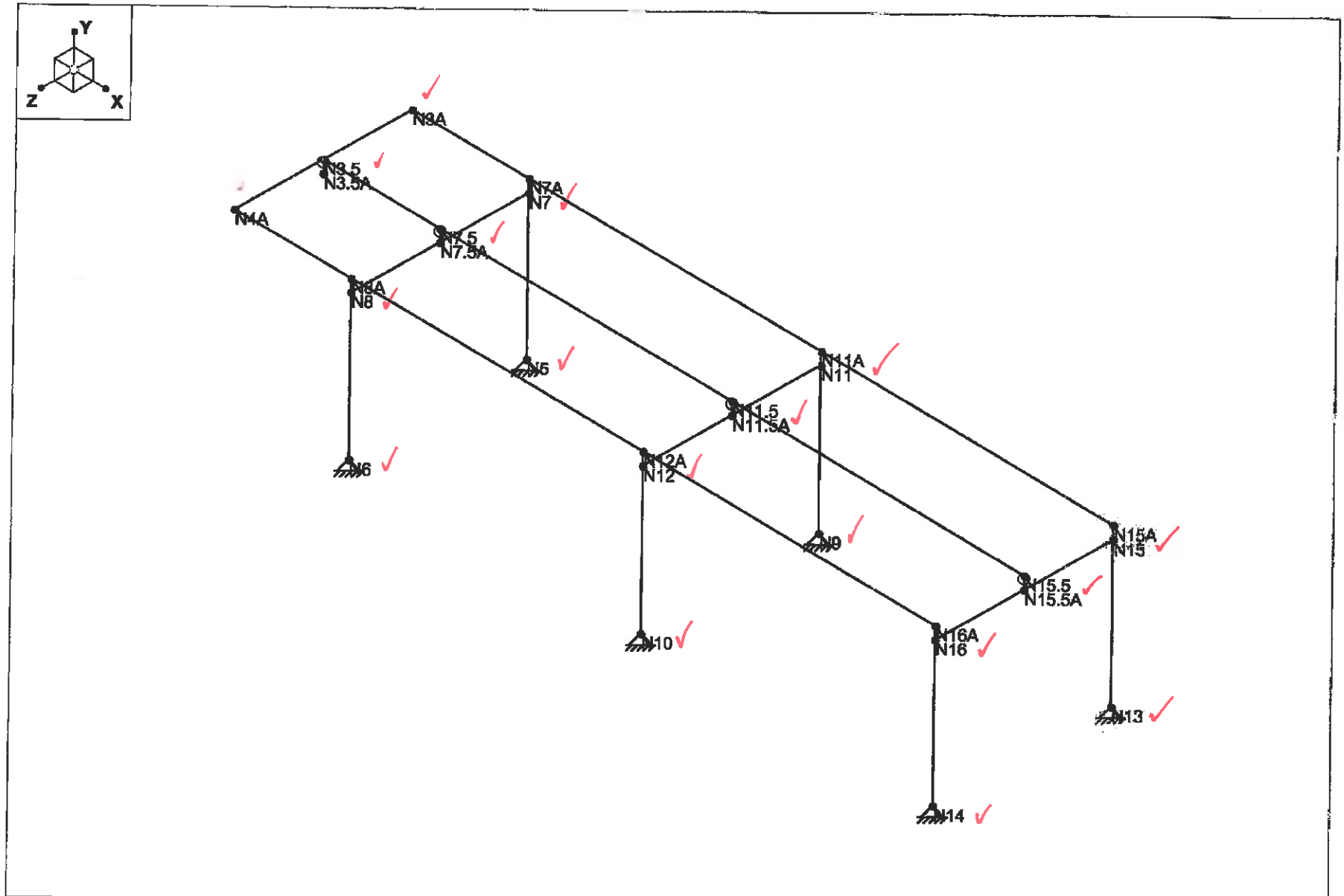

SK - 3	
Dec 10, 2014 at 12:01 PM	
CANOPY 3D_1.r3d	

B18

B18A

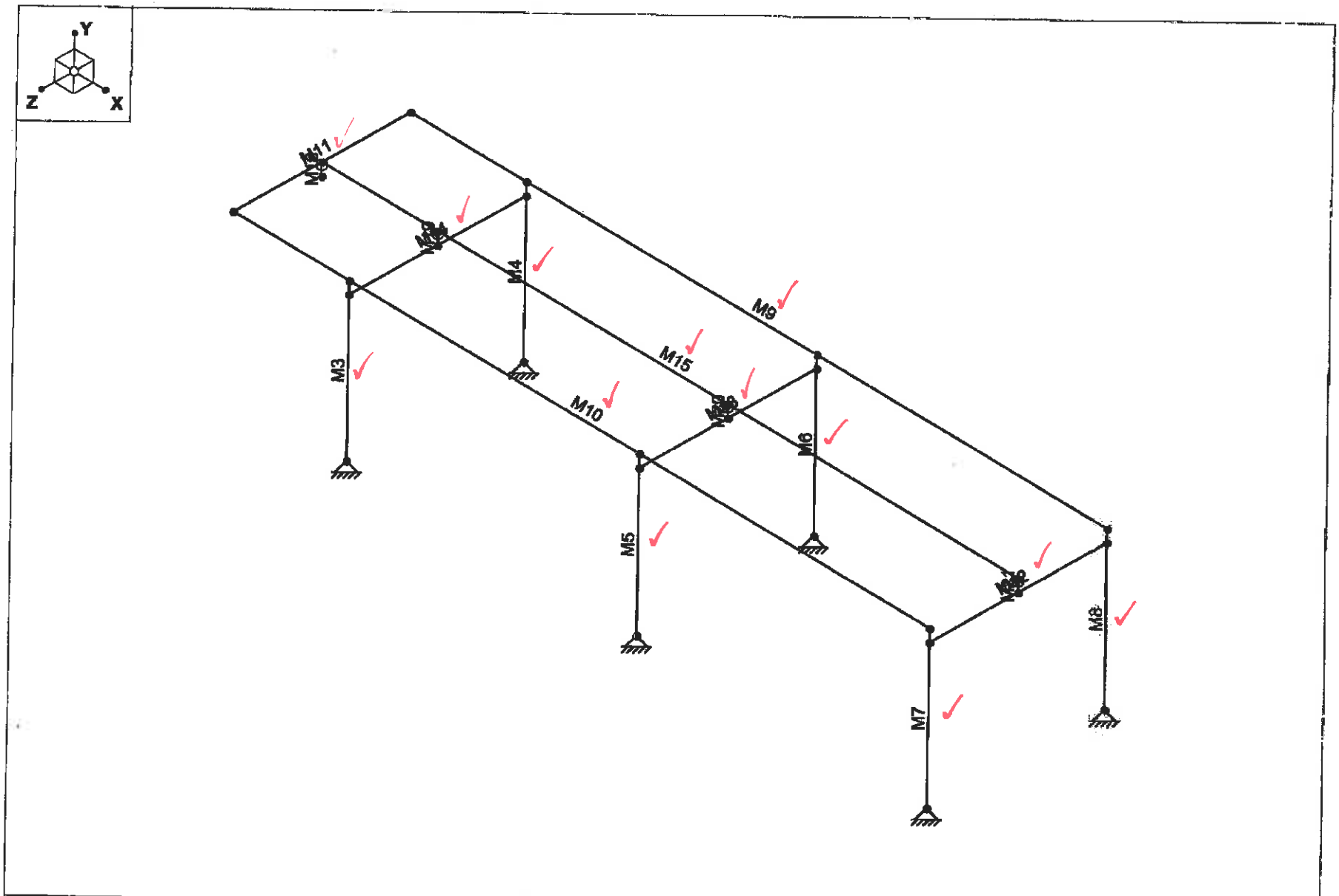

SK - 2	
Dec 10, 2014 at 12:00 PM	
CANOPY 3D_1.r3d	

B18A

B19

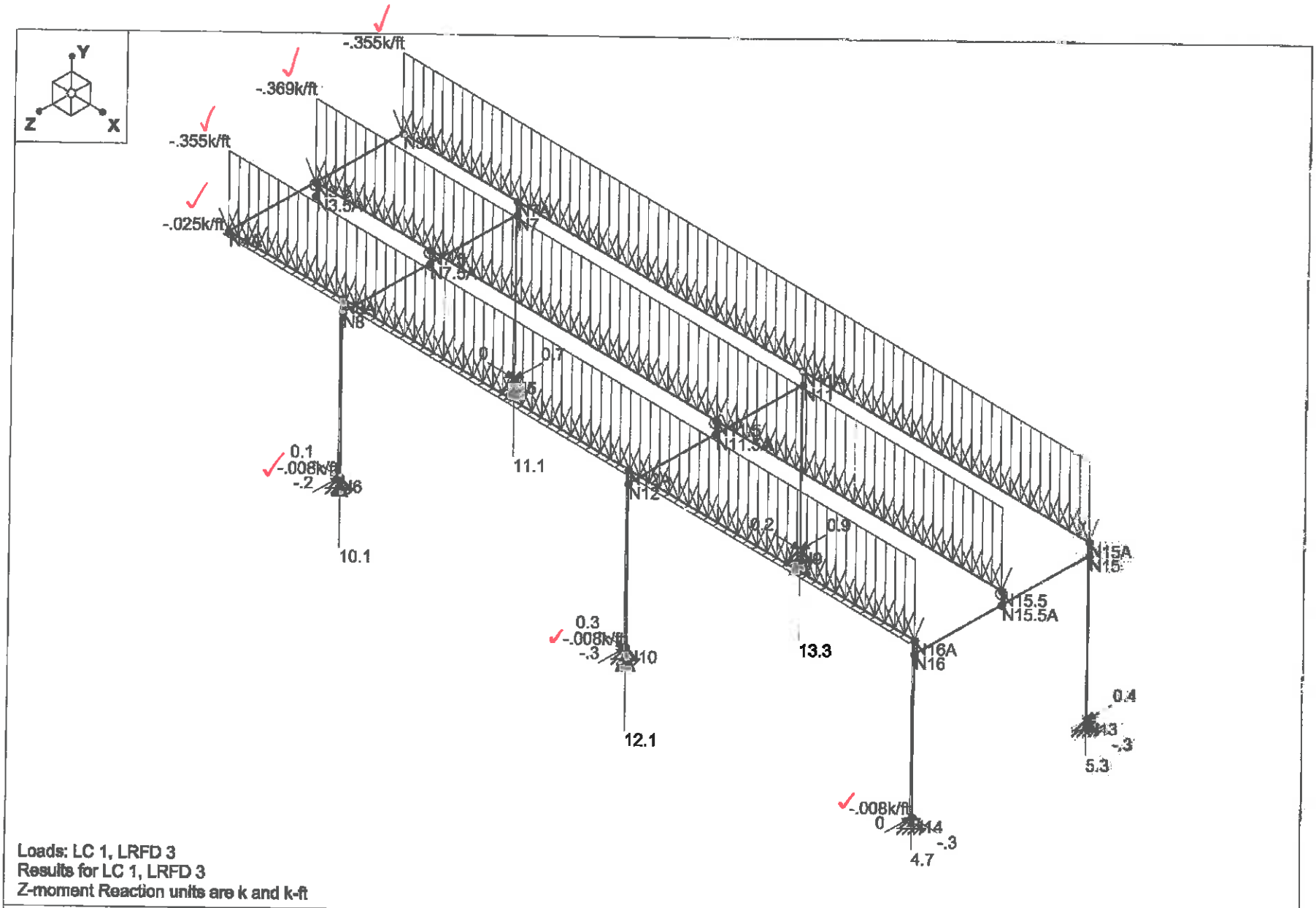

Loads: LC 1, LRFD 3
Results for LC 1, LRFD 3
Z-moment Reaction units are k and k-ft

SK - 4	
Dec 10, 2014 at 12:03 PM	
CANOPY 3D_1.r3d	

B19

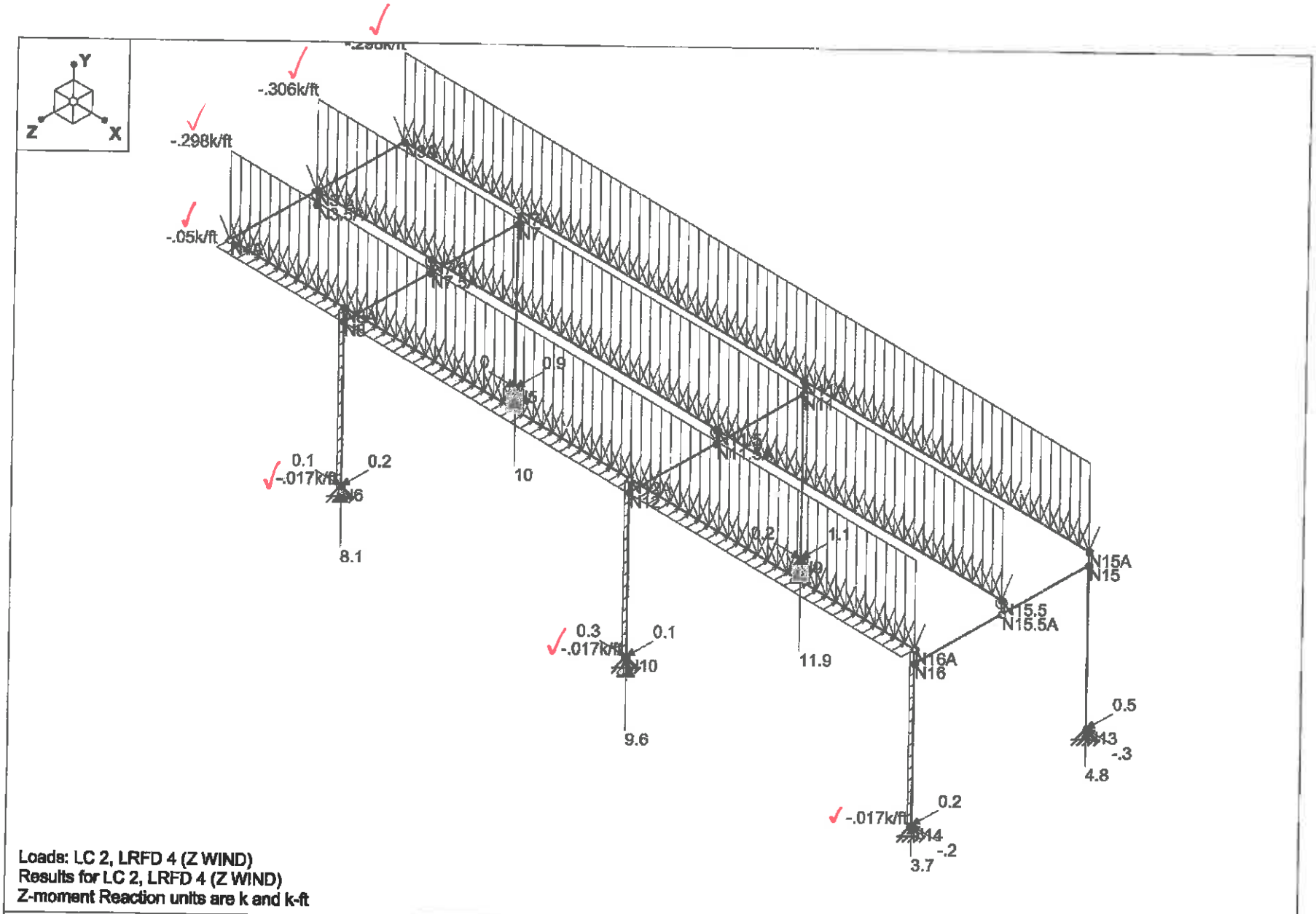

Loads: LC 2, LRFD 4 (Z WIND)
Results for LC 2, LRFD 4 (Z WIND)
Z-moment Reaction units are k and k-ft

SK - 5	
Dec 10, 2014 at 12:04 PM	
CANOPY 3D_1.r3d	

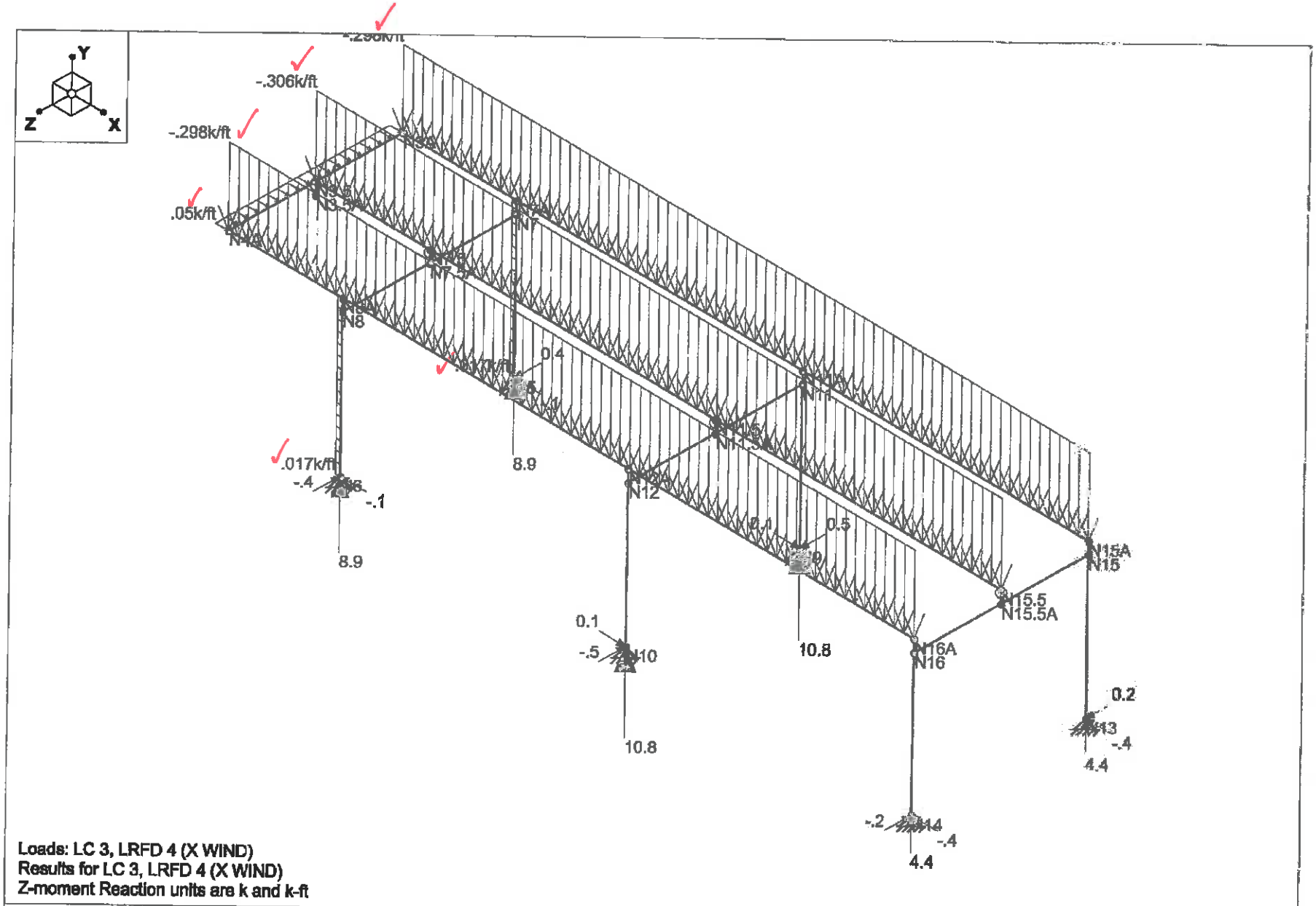

Loads: LC 3, LRFD 4 (X WIND)
Results for LC 3, LRFD 4 (X WIND)
Z-moment Reaction units are k and k-ft

SK - 6	
Dec 10, 2014 at 12:04 PM	
CANOPY 3D_1.r3d	

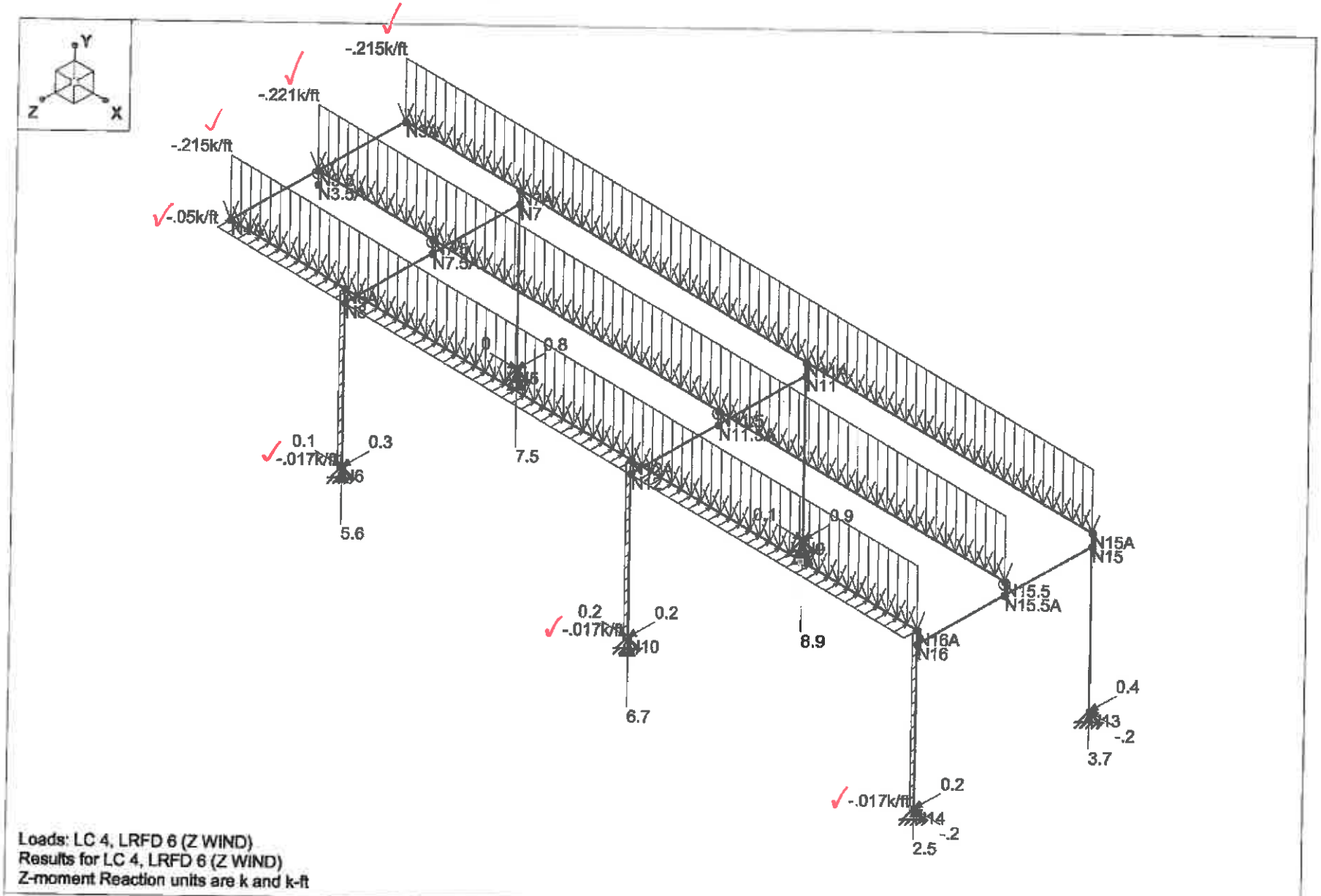

Loads: LC 4, LRFD 6 (Z WIND)
Results for LC 4, LRFD 6 (Z WIND)
Z-moment Reaction units are k and k-ft

SK - 8	
Dec 10, 2014 at 12:06 PM	
CANOPY 3D_1.r3d	

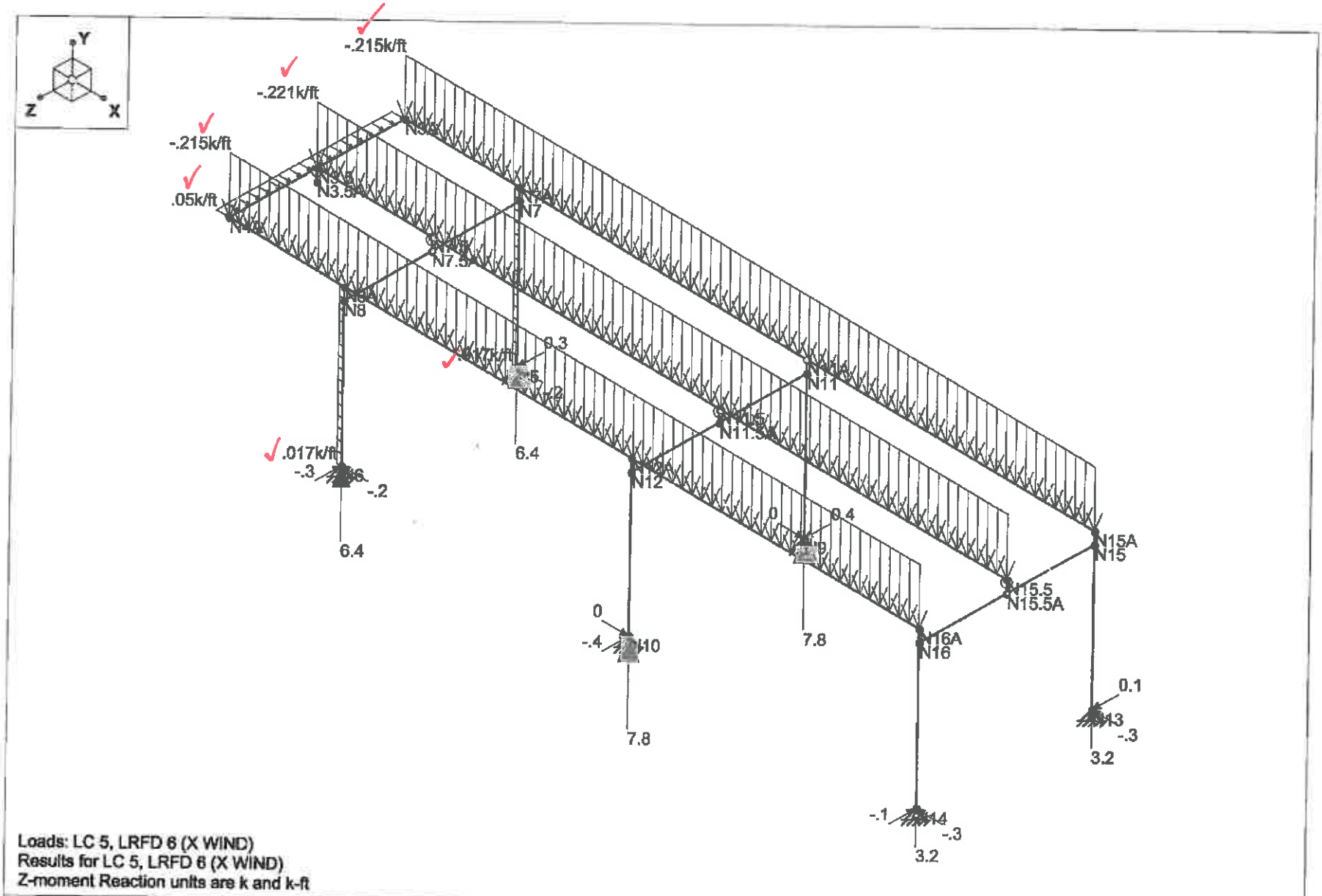

Loads: LC 5, LRFD 6 (X WIND)
Results for LC 5, LRFD 6 (X WIND)
Z-moment Reaction units are k and k-ft

SK - 9	
Dec 10, 2014 at 12:06 PM	
CANOPY 3D_1.r3d	

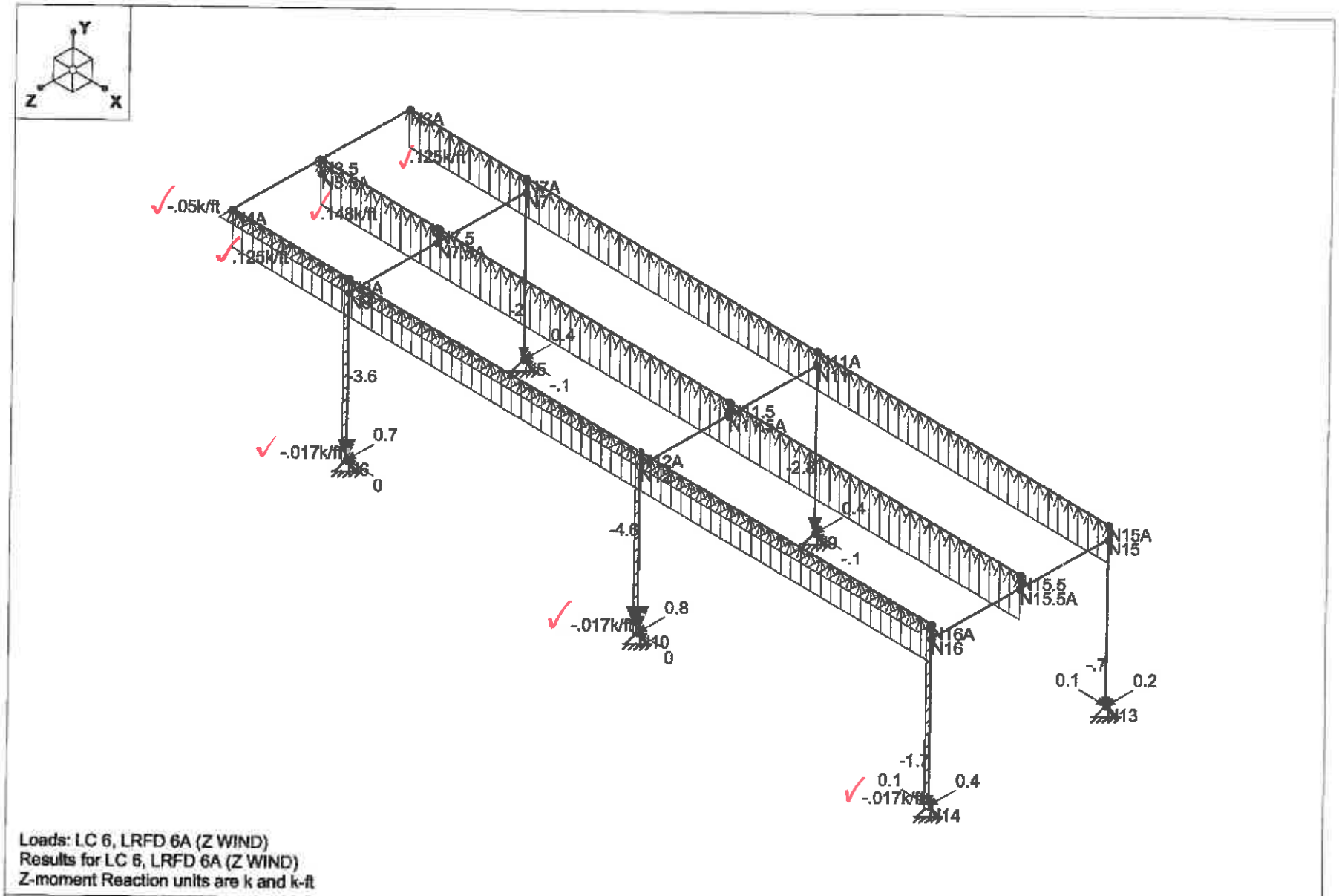

Loads: LC 6, LRFD 6A (Z WIND)
Results for LC 6, LRFD 6A (Z WIND)
Z-moment Reaction units are k and k-ft

SK - 10	
Dec 10, 2014 at 12:07 PM	
CANOPY 3D_1.r3d	

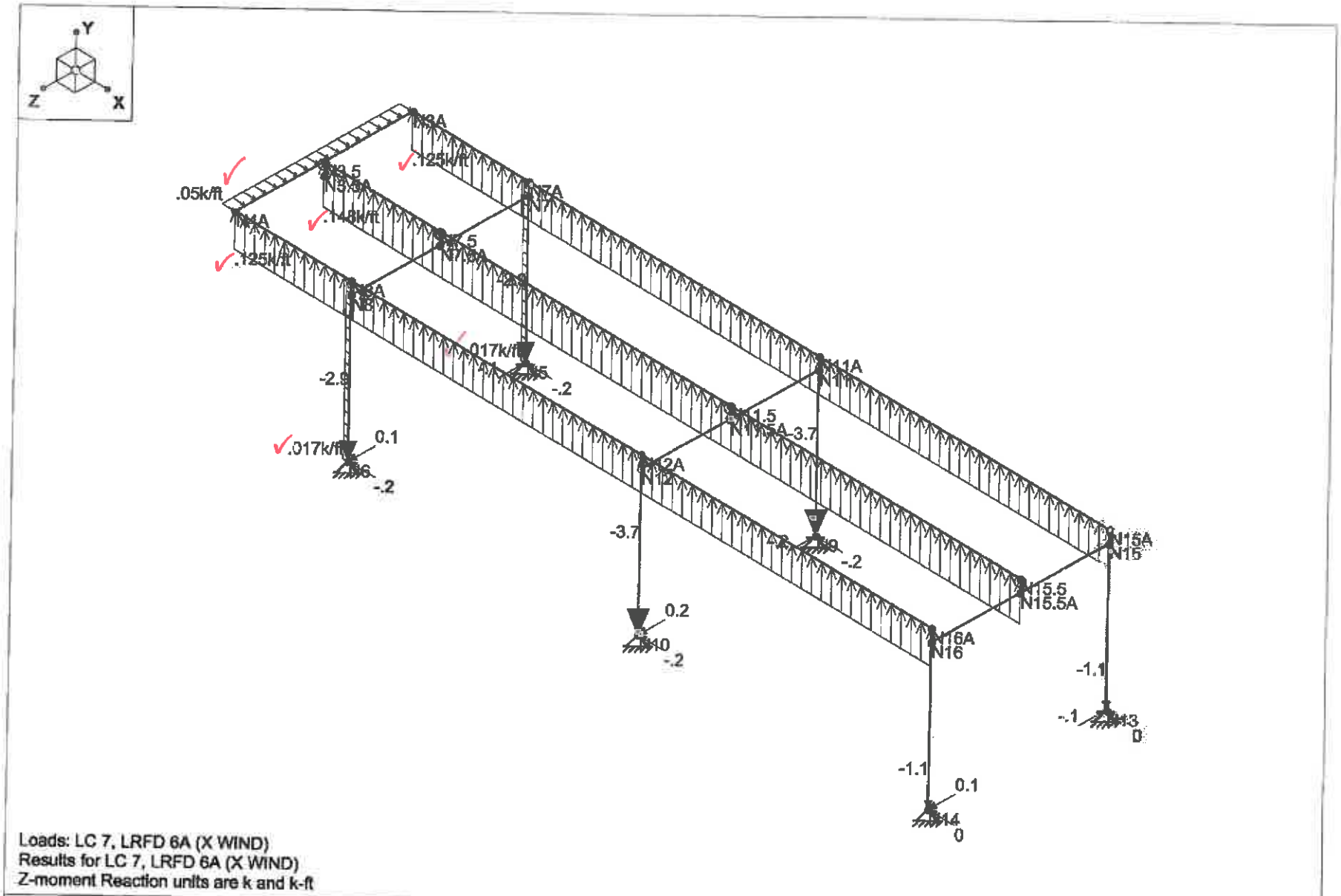

Loads: LC 7, LRFD 6A (X WIND)
Results for LC 7, LRFD 6A (X WIND)
Z-moment Reaction units are k and k-ft

SK - 11	
Dec 10, 2014 at 12:07 PM	
CANOPY 3D_1.r3d	

Hot Rolled Steel Properties

	Label	E [ksi]	G [ksi]	Nu	Therm (\1E...	Density[k/ft...	Yield[ksi]	Ry	Fu[ksi]	Rt
1	A36 Gr.36	29000	11154	.3	.65	.49	36	1.5	58	1.2
2	A572 Gr.50	29000	11154	.3	.65	.49	50	1.1	65	1.1
3	A992	29000	11154	.3	.65	.49	50	1.1	65	1.1
4	A500 Gr.B RND	29000	11154	.3	.65	.49	42	1.4	58	1.3
5	A500 Gr.B Rect	29000	11154	.3	.65	.49	46	1.4	58	1.3
6	A53 Gr.B	29000	11154	.3	.65	.49	35	1.6	60	1.2

Joint Coordinates and Temperatures

	Label	X [ft]	Y [ft]	Z [ft]	Temp [F]	Detach From Diap...
1	N5	8	0	0	0	
2	N6	8	0	12	0	
3	N7	8	9.833	0	0	
4	N8	8	9.833	12	0	
5	N9	28	0	0	0	
6	N10	28	0	12	0	
7	N11	28	9.833	0	0	
8	N12	28	9.833	12	0	
9	N13	48	0	0	0	
10	N14	48	0	12	0	
11	N15	48	9.833	0	0	
12	N16	48	9.833	12	0	
13	N3.5	0	10.67	6	0	
14	N7.5	8	10.67	6	0	
15	N11.5	28	10.67	6	0	
16	N15.5	48	10.67	6	0	
17	N3.5A	0	9.833	6	0	
18	N7.5A	8	9.833	6	0	
19	N11.5A	28	9.833	6	0	
20	N15.5A	48	9.833	6	0	
21	N4A	0	10.67	12	0	
22	N3A	0	10.67	0	0	
23	N16A	48	10.67	12	0	
24	N15A	48	10.67	0	0	
25	N8A	8	10.67	12	0	
26	N7A	8	10.67	0	0	
27	N12A	28	10.67	12	0	
28	N11A	28	10.67	0	0	

Joint Boundary Conditions

	Joint Label	X [k/in]	Y [k/in]	Z [k/in]	X Rot.[k-ft/rad]	Y Rot.[k-ft/rad]	Z Rot.[k-ft/rad]	Footing
1	N6	Reaction	Reaction	Reaction				
2	N5	Reaction	Reaction	Reaction				
3	N10	Reaction	Reaction	Reaction				
4	N9	Reaction	Reaction	Reaction				
5	N14	Reaction	Reaction	Reaction				
6	N13	Reaction	Reaction	Reaction				
7	N3.5A							
8	N7.5A							
9	N11.5A							
10	N15.5A							

Hot Rolled Steel Design Parameters

	Label	Shape	Length[ft]	Lbyy[ft]	Lbzz[ft]	Lcomp top[ft]	Lcomp bot[ft]	L-torq...	Kyy	Kzz	Cb	Function
1	M3	HSS6x6x4	10.67									Lateral
2	M4	HSS6x6x4	10.67									Lateral
3	M5	HSS6x6x4	10.67									Lateral
4	M6	HSS6x6x4	10.67									Lateral
5	M7	HSS6x6x4	10.67									Lateral
6	M8	HSS6x6x4	10.67									Lateral
7	M9	C10x15.3	48			1	10					Lateral
8	M10	C10x15.3	48			1	10					Lateral
9	M11	C10x15.3	12									Lateral
10	M12	C10x15.3	12									Lateral
11	M13	C10x15.3	12									Lateral
12	M14	C10x15.3	12									Lateral
13	M15	C10x15.3	48			1	10					Lateral

Member Distributed Loads (BLC 1 : DEAD LOAD (TOTAL))

	Member Label	Direction	Start Magnitude[k/ft,F]	End Magnitude[k/ft,F]	Start Location[ft,%]	End Location[ft,%]
1	M10	Y	-.081	-.081	0	%100
2	M9	Y	-.081	-.081	0	%100
3	M15	Y	-.074	-.074	0	%100

Member Distributed Loads (BLC 2 : DEAD LOAD (NO SOLAR))

	Member Label	Direction	Start Magnitude[k/ft,F]	End Magnitude[k/ft,F]	Start Location[ft,%]	End Location[ft,%]
1	M10	Y	-.019	-.019	0	%100
2	M9	Y	-.019	-.019	0	%100
3	M15	Y	-.007	-.007	0	%100

Member Distributed Loads (BLC 3 : LIVE LOAD)

	Member Label	Direction	Start Magnitude[k/ft,F]	End Magnitude[k/ft,F]	Start Location[ft,%]	End Location[ft,%]
1	M10	Y	-.117	-.117	0	%100
2	M9	Y	-.117	-.117	0	%100
3	M15	Y	-.127	-.127	0	%100

Member Distributed Loads (BLC 4 : WIND (DOWN))

	Member Label	Direction	Start Magnitude[k/ft,F]	End Magnitude[k/ft,F]	Start Location[ft,%]	End Location[ft,%]
1	M10	Y	-.142	-.142	0	%100
2	M9	Y	-.142	-.142	0	%100
3	M15	Y	-.154	-.154	0	%100

Member Distributed Loads (BLC 5 : WIND (UPLIFT))

	Member Label	Direction	Start Magnitude[k/ft,F]	End Magnitude[k/ft,F]	Start Location[ft,%]	End Location[ft,%]
1	M10	Y	.142	.142	0	%100
2	M9	Y	.142	.142	0	%100
3	M15	Y	.154	.154	0	%100

Member Distributed Loads (BLC 6 : WIND (Z))

	Member Label	Direction	Start Magnitude[k/ft,F]	End Magnitude[k/ft,F]	Start Location[ft,%]	End Location[ft,%]
1	M10	Z	-.05	-.05	0	%100
2	M3	Z	-.017	-.017	0	%100
3	M5	Z	-.017	-.017	0	%100
4	M7	Z	-.017	-.017	0	%100

Member Distributed Loads (BLC 7 : WIND (X))

Member Label	Direction	Start Magnitude[k/ft,F]	End Magnitude[k/ft,F]	Start Location[ft,%]	End Location[ft,%]

Member Distributed Loads (BLC 7 : WIND (X)) (Continued)

	Member Label	Direction	Start Magnitude[k/ft,F]	End Magnitude[k/ft,F]	Start Location[ft,%]	End Location[ft,%]
1	M11	X	.05	.05	0	%100
2	M3	X	.017	.017	0	%100
3	M4	X	.017	.017	0	%100

Basic Load Cases

	BLC Description	Category	X Gravity	Y Gravity	Z Gravity	Joint	Point	Distributed	Area(Me...	Surface(...
1	DEAD LOAD (TOTAL)	None		-1				3		
2	DEAD LOAD (NO SOLAR)	None		-1				3		
3	LIVE LOAD	None						3		
4	WIND (DOWN)	None						3		
5	WIND (UPLIFT)	None						3		
6	WIND (Z)	None						4		
7	WIND (X)	None						3		

Load Combinations

	Description	Solve	PD...	SR...	BLC	Factor	BLC	Factor	BLC	Factor	BLC	Factor	BLC	Factor	BLC	Factor	BLC	Factor	BLC	Factor
1	LRFD 3	Yes	Y		1	1.2	3	1.6	4	.5	6	.5								
2	LRFD 4 (Z WIND)	Yes	Y		1	1.2	4	1	6	1	3	.5								
3	LRFD 4 (X WIND)	Yes	Y		1	1.2	4	1	7	1	3	.5								
4	LRFD 6 (Z WIND)	Yes	Y		1	.9	4	1	6	1										
5	LRFD 6 (X WIND)	Yes	Y		1	.9	4	1	7	1										
6	LRFD 6A (Z WIND)	Yes	Y		2	.9	5	1	6	1										
7	LRFD 6A (X WIND)	Yes	Y		2	.9	5	1	7	1										
8	ASD 3				1	1	3	1												
9	ASD 5				1	1	4	.6	6	.6										
10	ASD 5A				2	1	5	6	6	6										
11	ASD 6				1	1	3	.75	4	.45	6	.45								
12	ASD 6A				2	1	3	75	5	.45	6	45								
13	ASD 7				1	.6	4	.6	6	.6										
14	ASD 7A				2	6	5	6	6	6										

Joint Reactions

	LC	Joint Label	X [k]	Y [k]	Z [k]	MX [k-ft]	MY [k-ft]	MZ [k-ft]
1	1	N6	.075	10.132	-.166	0	0	0
2	1	N5	.048	11.15	.715	0	0	0
3	1	N10	.289	12.138	-.292	0	0	0
4	1	N9	.249	13.303	.875	0	0	0
5	1	N14	-.312	4.702	-.032	0	0	0
6	1	N13	-.348	5.287	.37	0	0	0
7	1	Totals:	0	56.713	1.469			
8	1	COG (ft):	X: 24.05	Y: 10.531	Z: 6			
9	2	N6	.076	8.052	.195	0	0	0
10	2	N5	.021	10.034	.9	0	0	0
11	2	N10	.268	9.641	.11	0	0	0
12	2	N9	.19	11.902	1.057	0	0	0
13	2	N14	-.242	3.69	.185	0	0	0
14	2	N13	-.313	4.844	.489	0	0	0
15	2	Totals:	0	48.164	2.938			
16	2	COG (ft):	X: 24.059	Y: 10.507	Z: 6			
17	3	N6	-.147	8.928	-.376	0	0	0
18	3	N5	-.147	8.928	.376	0	0	0
19	3	N10	.076	10.76	-.5	0	0	0
20	3	N9	.076	10.76	.5	0	0	0

Joint Reactions (Continued)

	LC	Joint Label	X [k]	Y [k]	Z [k]	MX [k-ft]	MY [k-ft]	MZ [k-ft]
21	3	N14	-.41	4.394	-.182	0	0	0
22	3	N13	-.41	4.394	.182	0	0	0
23	3	Totals:	-.963	48.164	0			
24	3	COG (ft):	X: 24.059	Y: 10.507	Z: 6			
25	4	N6	.062	5.595	.3	0	0	0
26	4	N5	.008	7.499	.794	0	0	0
27	4	N10	.205	6.715	.25	0	0	0
28	4	N9	.128	8.878	.921	0	0	0
29	4	N14	-.167	2.532	.235	0	0	0
30	4	N13	-.236	3.663	.438	0	0	0
31	4	Totals:	0	34.881	2.938			
32	4	COG (ft):	X: 24.061	Y: 10.501	Z: 6			
33	5	N6	-.162	6.437	-.27	0	0	0
34	5	N5	-.162	6.437	.27	0	0	0
35	5	N10	.012	7.785	-.361	0	0	0
36	5	N9	.012	7.785	.361	0	0	0
37	5	N14	-.331	3.219	-.132	0	0	0
38	5	N13	-.331	3.219	.132	0	0	0
39	5	Totals:	-.963	34.881	0			
40	5	COG (ft):	X: 24.061	Y: 10.501	Z: 6			
41	6	N6	-.014	-3.638	.71	0	0	0
42	6	N5	-.067	-1.98	.38	0	0	0
43	6	N10	-.035	-4.612	.809	0	0	0
44	6	N9	-.11	-2.757	.372	0	0	0
45	6	N14	.145	-1.741	.427	0	0	0
46	6	N13	.081	-.69	.24	0	0	0
47	6	Totals:	0	-15.418	2.938			
48	6	COG (ft):	X: 23.862	Y: 11.052	Z: 6			
49	7	N6	-.241	-2.902	.143	0	0	0
50	7	N5	-.241	-2.902	-.143	0	0	0
51	7	N10	-.231	-3.697	.195	0	0	0
52	7	N9	-.231	-3.697	-.195	0	0	0
53	7	N14	-.009	-1.111	.064	0	0	0
54	7	N13	-.009	-1.111	-.064	0	0	0
55	7	Totals:	-.963	-15.418	0			
56	7	COG (ft):	X: 23.862	Y: 11.052	Z: 6			

UPLIFT

Joint Deflections

	LC	Joint Label	X [in]	Y [in]	Z [in]	X Rotation [rad]	Y Rotation [rad]	Z Rotation [rad]
1	1	N5	0	0	0	-5.391e-3	-5.983e-4	2.061e-3
2	1	N6	0	0	0	-2.264e-3	1.315e-3	2.6e-3
3	1	N7	-.211	-.011	-.325	2.617e-3	-5.983e-4	1.229e-3
4	1	N8	-.262	-.01	-.325	-3.833e-3	1.315e-3	1.44e-3
5	1	N9	0	0	0	-6.296e-3	-4.002e-4	2.922e-3
6	1	N10	0	0	0	-2.176e-3	-4.504e-5	3.515e-3
7	1	N11	-.226	-.013	-.359	3.558e-3	-4.002e-4	-1.194e-4
8	1	N12	-.278	-.012	-.36	-4.914e-3	-4.504e-5	8.654e-6
9	1	N13	0	0	0	-2.806e-3	-3.559e-5	3.739e-4
10	1	N14	0	0	0	-1.342e-3	-4.122e-3	9.413e-4
11	1	N15	-.181	-.005	-.175	1.205e-3	-3.559e-5	3.896e-3
12	1	N16	-.233	-.004	-.175	-1.855e-3	-4.122e-3	4.068e-3
13	1	N3.5	-.244	-.382	-.398	9.168e-5	-4.265e-4	2.442e-3
14	1	N7.5	-.244	-.205	-.322	2.573e-4	-6.6e-4	-2.969e-4
15	1	N11.5	-.244	-.267	-.357	2.893e-4	-4.164e-4	-1.549e-3
16	1	N15.5	-.244	-.097	-.174	1.375e-4	3.111e-4	7.903e-3
17	1	N3.5A	-.22	-.382	-.399	9.168e-5	-4.265e-4	0

Joint Deflections (Continued)

	LC	Joint Label	X [in]	Y [in]	Z [in]	X Rotation [rad]	Y Rotation [rad]	Z Rotation [rad]
18	1	N7.5A	-.247	-.205	-.325	2.573e-4	-6.6e-4	1.335e-3
19	1	N11.5A	-.26	-.267	-.36	2.893e-4	-4.164e-4	-5.538e-5
20	1	N15.5A	-.164	-.097	-.175	1.375e-4	3.111e-4	3.982e-3
21	1	N4A	-.275	-.378	-.398	-1.245e-4	-4.567e-4	4.65e-3
22	1	N3A	-.222	-.365	-.398	3.069e-4	-6.76e-4	4.503e-3
23	1	N16A	-.276	-.005	-.194	-1.874e-3	-4.269e-3	4.631e-3
24	1	N15A	-.223	-.005	-.163	1.205e-3	-4.872e-5	4.52e-3
25	1	N8A	-.275	-.01	-.364	-3.866e-3	1.389e-3	1.231e-3
26	1	N7A	-.222	-.011	-.298	2.615e-3	-6.081e-4	1.082e-3
27	1	N12A	-.275	-.012	-.41	-4.958e-3	-3.721e-5	-6.101e-4
28	1	N11A	-.223	-.013	-.324	3.562e-3	-3.954e-4	-6.554e-4
29	2	N5	0	0	0	-8.761e-3	-7.993e-4	1.355e-3
30	2	N6	0	0	0	-6.13e-3	2.239e-3	2.413e-3
31	2	N7	-.143	-.01	-.632	1.576e-3	-7.993e-4	9.288e-4
32	2	N8	-.243	-.008	-.632	-3.944e-3	2.239e-3	1.342e-3
33	2	N9	0	0	0	-9.948e-3	-5.384e-4	2.068e-3
34	2	N10	0	0	0	-6.467e-3	-3.125e-4	3.231e-3
35	2	N11	-.156	-.011	-.697	2.312e-3	-5.384e-4	-1.868e-4
36	2	N12	-.258	-.009	-.698	-4.942e-3	-3.125e-4	6.501e-5
37	2	N13	0	0	0	-4.697e-3	-7.203e-4	-5.238e-5
38	2	N14	0	0	0	-3.49e-3	-7.531e-3	1.062e-3
39	2	N15	-.119	-.005	-.346	6.66e-4	-7.203e-4	3.157e-3
40	2	N16	-.22	-.003	-.346	-1.95e-3	-7.531e-3	3.493e-3
41	2	N3.5	-.191	-.327	-.777	1.803e-4	-8.39e-4	2.104e-3
42	2	N7.5	-.191	-.174	-.627	5.006e-4	-1.309e-3	-2.332e-4
43	2	N11.5	-.19	-.227	-.692	5.611e-4	-8.173e-4	-1.324e-3
44	2	N15.5	-.19	-.082	-.343	2.713e-4	6.387e-4	6.712e-3
45	2	N3.5A	-.17	-.327	-.779	1.803e-4	-8.39e-4	0
46	2	N7.5A	-.193	-.174	-.632	5.006e-4	-1.309e-3	1.136e-3
47	2	N11.5A	-.204	-.227	-.697	5.611e-4	-8.173e-4	-6.089e-5
48	2	N15.5A	-.122	-.082	-.346	2.713e-4	6.387e-4	3.325e-3
49	2	N4A	-.256	-.331	-.777	-9.519e-6	-1.118e-3	4.061e-3
50	2	N3A	-.152	-.305	-.777	3.682e-4	-1.124e-3	3.772e-3
51	2	N16A	-.257	-.004	-.366	-1.987e-3	-7.829e-3	3.943e-3
52	2	N15A	-.153	-.005	-.339	6.659e-4	-7.391e-4	3.726e-3
53	2	N8A	-.256	-.008	-.673	-4.007e-3	2.39e-3	1.143e-3
54	2	N7A	-.152	-.01	-.616	1.573e-3	-8.234e-4	8.503e-4
55	2	N12A	-.256	-.01	-.749	-5.025e-3	-2.886e-4	-4.959e-4
56	2	N11A	-.153	-.012	-.674	2.315e-3	-5.363e-4	-5.852e-4
57	3	N5	0	0	0	-1.299e-3	-1.221e-5	-5.551e-4
58	3	N6	0	0	0	1.299e-3	1.221e-5	-5.551e-4
59	3	N7	.021	-.009	0	2.645e-3	-1.221e-5	4.296e-4
60	3	N8	.021	-.009	0	-2.645e-3	1.221e-5	4.296e-4
61	3	N9	0	0	0	-1.728e-3	3.071e-4	1.797e-4
62	3	N10	0	0	0	1.728e-3	-3.071e-4	1.797e-4
63	3	N11	.009	-.01	0	3.519e-3	3.071e-4	-6.022e-4
64	3	N12	.009	-.01	0	-3.519e-3	-3.071e-4	-6.022e-4
65	3	N13	0	0	0	-6.294e-4	1.162e-3	-1.804e-3
66	3	N14	0	0	0	6.294e-4	-1.162e-3	-1.804e-3
67	3	N15	.044	-.004	0	1.282e-3	1.162e-3	2.527e-3
68	3	N16	.044	-.004	0	-1.282e-3	-1.162e-3	2.527e-3
69	3	N3.5	.052	-.291	0	0	0	1.73e-3
70	3	N7.5	.052	-.169	0	0	0	-4.465e-4
71	3	N11.5	.052	-.223	0	0	0	-1.243e-3
72	3	N15.5	.051	-.082	0	0	0	6.512e-3
73	3	N3.5A	.069	-.291	0	0	0	0
74	3	N7.5A	.047	-.169	0	0	0	4.296e-4

Joint Deflections (Continued)

	LC	Joint Label	X [in]	Y [in]	Z [in]	X Rotation [rad]	Y Rotation [rad]	Z Rotation [rad]
75	3	N11.5A	.039	-.223	0	0	0	-6.022e-4
76	3	N15.5A	.117	-.082	0	0	0	2.527e-3
77	3	N4A	.017	-.279	0	-2.341e-4	-6.05e-4	3.545e-3
78	3	N3A	.017	-.279	0	2.341e-4	6.05e-4	3.545e-3
79	3	N16A	.015	-.004	-.013	-1.282e-3	-1.142e-3	3.291e-3
80	3	N15A	.015	-.004	.013	1.282e-3	1.142e-3	3.291e-3
81	3	N8A	.016	-.009	-.027	-2.644e-3	4.409e-5	5.419e-4
82	3	N7A	.016	-.009	.027	2.644e-3	-4.409e-5	5.419e-4
83	3	N12A	.016	-.011	-.036	-3.522e-3	-2.891e-4	-7.429e-4
84	3	N11A	.016	-.011	.036	3.522e-3	2.891e-4	-7.429e-4
85	4	N5	0	0	0	-8.095e-3	-7.097e-4	7.77e-4
86	4	N6	0	0	0	-6.198e-3	2.171e-3	1.796e-3
87	4	N7	-.085	-.007	-.606	8.752e-4	-7.097e-4	6.053e-4
88	4	N8	-.181	-.005	-.607	-3.15e-3	2.171e-3	1.005e-3
89	4	N9	0	0	0	-9.104e-3	-4.583e-4	1.279e-3
90	4	N10	0	0	0	-6.582e-3	-3.295e-4	2.4e-3
91	4	N11	-.094	-.009	-.666	1.392e-3	-4.583e-4	-1.796e-4
92	4	N12	-.192	-.006	-.667	-3.909e-3	-3.295e-4	6.388e-5
93	4	N13	0	0	0	-4.442e-3	-8.06e-4	-2.352e-4
94	4	N14	0	0	0	-3.584e-3	-7.347e-3	8.397e-4
95	4	N15	-.067	-.003	-.339	3.233e-4	-8.06e-4	2.209e-3
96	4	N16	-.165	-.002	-.339	-1.582e-3	-7.347e-3	2.532e-3
97	4	N3.5	-.127	-.236	-.75	1.742e-4	-8.125e-4	1.514e-3
98	4	N7.5	-.127	-.126	-.602	4.808e-4	-1.287e-3	-1.806e-4
99	4	N11.5	-.126	-.165	-.661	5.368e-4	-7.897e-4	-9.632e-4
100	4	N15.5	-.126	-.06	-.336	2.66e-4	6.678e-4	4.884e-3
101	4	N3.5A	-.112	-.236	-.752	1.742e-4	-8.125e-4	0
102	4	N7.5A	-.128	-.126	-.607	4.808e-4	-1.287e-3	8.049e-4
103	4	N11.5A	-.136	-.165	-.666	5.368e-4	-7.897e-4	-5.786e-5
104	4	N15.5A	-.077	-.06	-.339	2.66e-4	6.678e-4	2.37e-3
105	4	N4A	-.191	-.242	-.75	3.563e-5	-1.138e-3	2.969e-3
106	4	N3A	-.091	-.217	-.75	3.11e-4	-1.058e-3	2.691e-3
107	4	N16A	-.192	-.003	-.356	-1.619e-3	-7.644e-3	2.851e-3
108	4	N15A	-.092	-.004	-.335	3.23e-4	-8.22e-4	2.643e-3
109	4	N8A	-.191	-.006	-.639	-3.212e-3	2.322e-3	8.54e-4
110	4	N7A	-.091	-.008	-.597	8.713e-4	-7.353e-4	5.713e-4
111	4	N12A	-.191	-.007	-.707	-3.99e-3	-3.036e-4	-3.512e-4
112	4	N11A	-.091	-.009	-.652	1.394e-3	-4.573e-4	-4.381e-4
113	5	N5	0	0	0	-9.332e-4	6.574e-5	-1.049e-3
114	5	N6	0	0	0	9.332e-4	-6.574e-5	-1.049e-3
115	5	N7	.072	-.006	0	1.9e-3	6.574e-5	1.323e-4
116	5	N8	.072	-.006	0	-1.9e-3	-6.574e-5	1.323e-4
117	5	N9	0	0	0	-1.249e-3	3.549e-4	-5.204e-4
118	5	N10	0	0	0	1.249e-3	-3.549e-4	-5.204e-4
119	5	N11	.064	-.007	0	2.543e-3	3.549e-4	-5.767e-4
120	5	N12	.064	-.007	0	-2.543e-3	-3.549e-4	-5.767e-4
121	5	N13	0	0	0	-4.551e-4	1.024e-3	-1.905e-3
122	5	N14	0	0	0	4.551e-4	-1.024e-3	-1.905e-3
123	5	N15	.088	-.003	0	9.266e-4	1.024e-3	1.609e-3
124	5	N16	.088	-.003	0	-9.266e-4	-1.024e-3	1.609e-3
125	5	N3.5	.106	-.202	0	0	0	1.159e-3
126	5	N7.5	.106	-.121	0	0	0	-3.827e-4
127	5	N11.5	.106	-.161	0	0	0	-8.846e-4
128	5	N15.5	.106	-.059	0	0	0	4.685e-3
129	5	N3.5A	.118	-.202	0	0	0	0
130	5	N7.5A	.102	-.121	0	0	0	1.323e-4
131	5	N11.5A	.097	-.161	0	0	0	-5.767e-4

Joint Deflections (Continued)

	LC	Joint Label	X [in]	Y [in]	Z [in]	X Rotation [rad]	Y Rotation [rad]	Z Rotation [rad]
132	5	N15.5A	.153	-.059	0	0	0	1.609e-3
133	5	N4A	.07	-.193	0	-1.808e-4	-6.493e-4	2.475e-3
134	5	N3A	.07	-.193	0	1.808e-4	6.493e-4	2.475e-3
135	5	N16A	.069	-.003	-.009	-9.266e-4	-1.006e-3	2.229e-3
136	5	N15A	.069	-.003	.009	9.266e-4	1.006e-3	2.229e-3
137	5	N8A	.07	-.007	-.019	-1.898e-3	-3.318e-5	2.793e-4
138	5	N7A	.07	-.007	.019	1.898e-3	3.318e-5	2.793e-4
139	5	N12A	.069	-.008	-.026	-2.545e-3	-3.354e-4	-5.895e-4
140	5	N11A	.069	-.008	.026	2.545e-3	3.354e-4	-5.895e-4
141	6	N5	0	0	0	-5.719e-3	-3.476e-4	-1.007e-3
142	6	N6	0	0	0	-6.682e-3	1.887e-3	-1.187e-4
143	6	N7	.093	.002	-.526	-1.89e-3	-3.476e-4	-3.307e-4
144	6	N8	.009	.004	-.526	-8.943e-5	1.887e-3	1.965e-5
145	6	N9	0	0	0	-6.02e-3	-1.633e-4	-1.178e-3
146	6	N10	0	0	0	-7.343e-3	-4.204e-4	-2.015e-4
147	6	N11	.095	.003	-.567	-2.342e-3	-1.633e-4	-6.046e-5
148	6	N12	.01	.005	-.568	1.87e-4	-4.204e-4	1.546e-4
149	6	N13	0	0	0	-3.494e-3	-1.237e-3	-4.115e-4
150	6	N14	0	0	0	-3.986e-3	-6.596e-3	5.297e-4
151	6	N15	.082	0	-.316	-1.009e-3	-1.237e-3	-1.266e-3
152	6	N16	-.003	.002	-.316	-1.644e-4	-6.596e-3	-9.887e-4
153	6	N3.5	.07	.074	-.662	1.536e-4	-7.224e-4	-2.72e-4
154	6	N7.5	.07	.06	-.522	4.178e-4	-1.213e-3	4.141e-4
155	6	N11.5	.07	.083	-.563	4.593e-4	-6.974e-4	4.083e-4
156	6	N15.5	.071	.028	-.313	2.48e-4	7.657e-4	-2.509e-3
157	6	N3.5A	.067	.074	-.664	1.536e-4	-7.224e-4	0
158	6	N7.5A	.074	.06	-.526	4.178e-4	-1.213e-3	-1.555e-4
159	6	N11.5A	.074	.083	-.567	4.593e-4	-6.974e-4	4.705e-5
160	6	N15.5A	.045	.028	-.316	2.48e-4	7.657e-4	-1.127e-3
161	6	N4A	.008	.062	-.662	1.674e-4	-1.232e-3	-7.847e-4
162	6	N3A	.095	.084	-.662	1.382e-4	-8.035e-4	-1.03e-3
163	6	N16A	.008	.002	-.318	-2.006e-4	-6.896e-3	-1.238e-3
164	6	N15A	.095	0	-.326	-1.009e-3	-1.242e-3	-1.415e-3
165	6	N8A	.008	.004	-.528	-1.516e-4	2.038e-3	3.296e-5
166	6	N7A	.095	.002	-.545	-1.892e-3	-3.8e-4	-2.155e-4
167	6	N12A	.008	.005	-.567	1.077e-4	-3.877e-4	2.149e-4
168	6	N11A	.095	.003	-.591	-2.34e-3	-1.672e-4	1.368e-4
169	7	N5	0	0	0	4.933e-4	3.856e-4	-2.574e-3
170	7	N6	0	0	0	-4.933e-4	-3.856e-4	-2.574e-3
171	7	N7	.226	.003	0	-1.005e-3	3.856e-4	-7.231e-4
172	7	N8	.226	.003	0	1.005e-3	-3.856e-4	-7.231e-4
173	7	N9	0	0	0	6.731e-4	5.453e-4	-2.703e-3
174	7	N10	0	0	0	-6.731e-4	-5.453e-4	-2.703e-3
175	7	N11	.229	.004	0	-1.371e-3	5.453e-4	-4.011e-4
176	7	N12	.229	.004	0	1.371e-3	-5.453e-4	-4.011e-4
177	7	N13	0	0	0	2.195e-4	4.229e-4	-1.831e-3
178	7	N14	0	0	0	-2.195e-4	-4.229e-4	-1.831e-3
179	7	N15	.214	.001	0	-4.47e-4	4.229e-4	-1.773e-3
180	7	N16	.214	.001	0	4.47e-4	-4.229e-4	-1.773e-3
181	7	N3.5	.272	.103	0	0	0	-5.703e-4
182	7	N7.5	.272	.064	0	0	0	2.47e-4
183	7	N11.5	.272	.087	0	0	0	4.779e-4
184	7	N15.5	.272	.029	0	0	0	-2.703e-3
185	7	N3.5A	.267	.103	0	0	0	0
186	7	N7.5A	.275	.064	0	0	0	-7.231e-4
187	7	N11.5A	.277	.087	0	0	0	-4.011e-4
188	7	N15.5A	.245	.029	0	0	0	-1.773e-3

Joint Deflections (Continued)

	LC	Joint Label	X [in]	Y [in]	Z [in]	X Rotation [rad]	Y Rotation [rad]	Z Rotation [rad]
189	7	N4A	.232	.104	0	-2.195e-5	-8.268e-4	-1.209e-3
190	7	N3A	.232	.104	0	2.195e-5	8.268e-4	-1.209e-3
191	7	N16A	.232	.001	.005	4.476e-4	-4.103e-4	-1.764e-3
192	7	N15A	.232	.001	-.005	-4.476e-4	4.103e-4	-1.764e-3
193	7	N8A	.232	.003	.01	1.007e-3	-3.494e-4	-4.571e-4
194	7	N7A	.232	.003	-.01	-1.007e-3	3.494e-4	-4.571e-4
195	7	N12A	.231	.004	.014	1.37e-3	-5.201e-4	4.817e-6
196	7	N11A	.231	.004	-.014	-1.37e-3	5.201e-4	4.817e-6

Member Section Forces

	LC	Member Label	Sec	Axial[k]	y Shear[k]	z Shear[k]	Torque[k-ft]	y-y Mo...	z-z Mo...
1	1	M3	1	10.132	-.111	-.122	0	0	0
2			2	10.075	-.111	-.144	0	-.355	.295
3			3	10.017	-.111	-.167	0	-.771	.59
4			4	9.96	-.111	-.189	0	-1.246	.885
5			5	6.993	-.154	.444	-.312	.007	1.215
6	1	M4	1	11.15	-.079	.763	0	0	0
7			2	11.093	-.079	.763	0	2.036	.211
8			3	11.036	-.079	.763	0	4.072	.423
9			4	10.979	-.079	.763	0	6.108	.634
10			5	6.962	-.076	.005	.041	-.004	.844
11	1	M5	1	12.138	-.334	-.233	0	0	0
12			2	12.081	-.334	-.256	0	-.653	.891
13			3	12.024	-.334	-.278	0	-1.365	1.783
14			4	11.967	-.334	-.301	0	-2.137	2.674
15			5	8.006	-.288	.583	-.033	.004	3.527
16	1	M6	1	13.303	-.29	.939	0	0	0
17			2	13.246	-.29	.939	0	2.505	.773
18			3	13.189	-.29	.939	0	5.011	1.547
19			4	13.132	-.29	.939	0	7.516	2.32
20			5	8.011	-.239	-.057	-.02	-.003	3.051
21	1	M7	1	4.702	.298	-.021	0	0	0
22			2	4.645	.298	-.044	0	-.087	-.795
23			3	4.588	.298	-.066	0	-.233	-1.59
24			4	4.531	.298	-.089	0	-.44	-2.385
25			5	3.103	.408	.245	.619	-.003	-3.271
26	1	M8	1	5.287	.336	.382	0	0	0
27			2	5.23	.336	.382	0	1.02	-.896
28			3	5.173	.336	.382	0	2.04	-1.791
29			4	5.116	.336	.382	0	3.059	-2.687
30			5	3.128	.316	-.002	.055	.002	-3.565
31	1	M9	1	.03	-.165	-.027	-.005	.106	-.008
32			2	.093	2.313	.007	0	-.044	1.869
33			3	.093	-2.171	.007	0	.036	1.014
34			4	.337	1.356	-.005	.002	.003	-7.067
35			5	.337	-3.128	-.005	.002	-.055	3.565
36	1	M10	1	-.002	-.164	.044	.008	.006	-.009
37			2	.137	2.344	.145	0	.024	2.111
38			3	.137	-2.14	-.155	0	-.039	.884
39			4	.429	1.382	.064	-.003	.416	-7.051
40			5	.429	-3.103	-.236	-.003	-.619	3.271
41	1	M11	1	.044	.164	.002	-.009	-.006	-.008
42			2	.044	.109	.002	-.009	-.002	-.418
43			3	.044	-.055	.03	-.009	-.075	-.663
44			4	.027	-.11	.03	.008	.015	-.416
45			5	.027	-.165	.03	.008	.106	-.005

Member Section Forces (Continued)

	LC	Member Label	Sec	Axial[k]	y Shear[k]	z Shear[k]	Torque[k-ft]	y-y Mo...	z-z Mo...
46	1	M12	1	.358	1.372	.116	0	-.619	.405
47			2	.358	1.317	.116	0	-.27	-3.628
48			3	.365	-1.822	.011	0	.078	-7.503
49			4	.365	-1.877	.011	0	.021	-1.956
50			5	.365	-1.931	.011	0	.055	3.756
51	1	M13	1	.902	3.909	-.003	0	.033	2.214
52			2	.902	3.854	-.003	0	.023	-9.431
53			3	.902	-4.959	-.006	0	.018	-20.911
54			4	.886	-5.014	-.006	0	0	-5.934
55			5	.886	-5.069	-.006	0	-.02	9.19
56	1	M14	1	.657	2.913	-.064	0	.312	1.239
57			2	.657	2.858	-.064	0	.12	-7.419
58			3	.681	-3.852	.015	0	-.072	-15.931
59			4	.681	-3.907	.015	0	-.004	-4.291
60			5	.681	-3.962	.015	0	.041	7.513
61	1	M15	1	-.029	.109	-.017	0	.078	.017
62			2	-.108	2.112	.007	0	-.049	-.076
63			3	-.108	-2.536	.007	0	.04	2.468
64			4	-.105	1.565	-.008	0	.002	-9.221
65			5	-.105	-3.082	-.008	0	-.091	-.121
66	1	M18	1	0	0	0	0	0	0
67			2	0	0	0	0	0	0
68			3	0	0	0	0	0	0
69			4	0	0	0	0	0	0
70			5	0	0	0	0	0	0
71	1	M19	1	6.65	-.083	.022	-.023	0	-.069
72			2	6.65	-.083	.022	-.023	.005	-.052
73			3	6.65	-.083	.022	-.023	.009	-.035
74			4	6.65	-.083	.022	-.023	.014	-.017
75			5	6.65	-.083	.022	-.023	.018	0
76	1	M20	1	8.748	-.019	-.019	-.006	0	-.016
77			2	8.748	-.019	-.019	-.006	-.004	-.012
78			3	8.748	-.019	-.019	-.006	-.008	-.008
79			4	8.748	-.019	-.019	-.006	-.012	-.004
80			5	8.748	-.019	-.019	-.006	-.016	0
81	1	M21	1	3.082	.144	.007	.091	0	.121
82			2	3.082	.144	.007	.091	.001	.091
83			3	3.082	.144	.007	.091	.003	.06
84			4	3.082	.144	.007	.091	.004	.03
85			5	3.082	.144	.007	.091	.006	0
86	2	M3	1	8.052	-.102	.263	0	0	0
87			2	7.995	-.102	.219	0	.643	.272
88			3	7.938	-.102	.174	0	1.166	.544
89			4	7.881	-.102	.129	0	1.57	.817
90			5	5.942	-.228	.848	-.638	.008	1.193
91	2	M4	1	10.034	-.041	.985	0	0	0
92			2	9.977	-.041	.985	0	2.628	.108
93			3	9.92	-.041	.985	0	5.257	.217
94			4	9.863	-.041	.985	0	7.885	.325
95			5	5.882	-.075	.044	.101	-.002	.463
96	2	M5	1	9.641	-.302	.2	0	0	0
97			2	9.584	-.302	.156	0	.475	.805
98			3	9.527	-.302	.111	0	.83	1.61
99			4	9.47	-.302	.066	0	1.066	2.415
100			5	6.758	-.288	1.091	-.101	.004	3.208
101	2	M6	1	11.902	-.215	1.169	0	0	0
102			2	11.845	-.215	1.169	0	3.117	.573

Member Section Forces (Continued)

	LC	Member Label	Sec	Axial[k]	y Shear[k]	z Shear[k]	Torque[k-ft]	y-y Mo...	z-z Mo...
103			3	11.788	-.215	1.169	0	6.234	1.147
104			4	11.731	-.215	1.169	0	9.351	1.72
105			5	6.769	-.19	-.043	-.009	-.002	2.273
106	2	M7	1	3.69	.232	.202	0	0	0
107			2	3.633	.232	.157	0	.479	-.618
108			3	3.575	.232	.112	0	.838	-1.236
109			4	3.518	.232	.067	0	1.078	-1.854
110			5	2.615	.481	.48	1.258	-.003	-2.682
111	2	M8	1	4.844	.306	.511	0	0	0
112			2	4.787	.306	.511	0	1.364	-.816
113			3	4.73	.306	.511	0	2.727	-1.632
114			4	4.673	.306	.511	0	4.091	-2.448
115			5	2.666	.3	.005	.079	.001	-3.258
116	2	M9	1	.054	-.149	-.048	-.003	.18	-.007
117			2	.121	1.941	.01	0	-.066	1.471
118			3	.121	-1.851	.01	0	.055	.931
119			4	.315	1.126	-.008	.001	.02	-5.982
120			5	.315	-2.666	-.008	.001	-.079	3.258
121	2	M10	1	-.009	-.148	.082	.009	.045	-.008
122			2	.206	2.002	.292	0	.031	1.946
123			3	.206	-1.79	-.308	0	-.066	.676
124			4	.497	1.176	.127	-.003	.817	-5.951
125			5	.497	-2.615	-.473	-.003	-1.258	2.682
126	2	M11	1	.082	.148	.009	-.008	-.045	-.009
127			2	.082	.093	.009	-.008	-.017	-.37
128			3	.082	-.039	.054	-.008	-.145	-.567
129			4	.048	-.094	.054	.007	.017	-.367
130			5	.048	-.149	.054	.007	.18	-.003
131	2	M12	1	.466	.847	.253	0	-1.258	-1.584
132			2	.466	.792	.253	0	-.498	-4.041
133			3	.481	-1.841	-.001	0	.263	-6.346
134			4	.481	-1.896	-.001	0	.083	-.741
135			5	.481	-1.951	-.001	0	.079	5.029
136	2	M13	1	1.105	2.66	-.023	0	.101	-2.074
137			2	1.105	2.605	-.023	0	.031	-9.972
138			3	1.105	-4.8	.003	0	-.039	-17.705
139			4	1.075	-4.855	.003	0	-.017	-3.191
140			5	1.075	-4.91	.003	0	-.009	11.457
141	2	M14	1	.794	1.885	-.141	0	.638	-2.486
142			2	.794	1.83	-.141	0	.216	-8.059
143			3	.842	-3.817	.044	0	-.206	-13.506
144			4	.842	-3.872	.044	0	-.031	-1.972
145			5	.842	-3.927	.044	0	.101	9.727
146	2	M15	1	-.045	.077	-.034	0	.156	.015
147			2	-.23	1.769	.015	0	-.097	-.046
148			3	-.23	-2.126	.015	0	.079	2.097
149			4	-.256	1.319	-.015	0	.003	-7.776
150			5	-.256	-2.576	-.015	0	-.176	-.237
151	2	M18	1	0	0	0	0	0	0
152			2	0	0	0	0	0	0
153			3	0	0	0	0	0	0
154			4	0	0	0	0	0	0
155			5	0	0	0	0	0	0
156	2	M19	1	5.587	-.187	.044	-.042	0	-.156
157			2	5.587	-.187	.044	-.042	.01	-.117
158			3	5.587	-.187	.044	-.042	.019	-.078
159			4	5.587	-.187	.044	-.042	.028	-.039

Member Section Forces (Continued)

	LC	Member Label	Sec	Axial[k]	y Shear[k]	z Shear[k]	Torque[k-ft]	y-y Mo...	z-z Mo...
160			5	5.587	-.187	.044	-.042	.037	0
161	2	M20	1	7.34	-.041	-.037	-.014	0	-.035
162			2	7.34	-.041	-.037	-.014	-.007	-.026
163			3	7.34	-.041	-.037	-.014	-.015	-.017
164			4	7.34	-.041	-.037	-.014	-.023	-.009
165			5	7.34	-.041	-.037	-.014	-.031	0
166	2	M21	1	2.576	.283	.014	.176	0	.237
167			2	2.576	.283	.014	.176	.003	.178
168			3	2.576	.283	.014	.176	.006	.119
169			4	2.576	.283	.014	.176	.009	.059
170			5	2.576	.283	.014	.176	.012	0
171	3	M3	1	8.928	.15	-.376	0	0	0
172			2	8.871	.104	-.376	0	-1.003	-.339
173			3	8.814	.059	-.376	0	-2.006	-.556
174			4	8.757	.014	-.376	0	-3.009	-.653
175			5	5.834	-.083	-.012	-.135	.005	-.585
176	3	M4	1	8.928	.15	.376	0	0	0
177			2	8.871	.104	.376	0	1.003	-.339
178			3	8.814	.059	.376	0	2.006	-.556
179			4	8.757	.014	.376	0	3.009	-.653
180			5	5.834	-.083	.012	.135	-.005	-.585
181	3	M5	1	10.76	-.075	-.5	0	0	0
182			2	10.703	-.075	-.5	0	-1.334	.199
183			3	10.646	-.075	-.5	0	-2.668	.398
184			4	10.589	-.075	-.5	0	-4.003	.596
185			5	6.749	-.1	.043	-.076	.003	.816
186	3	M6	1	10.76	-.075	.5	0	0	0
187			2	10.703	-.075	.5	0	1.334	.199
188			3	10.646	-.075	.5	0	2.668	.398
189			4	10.589	-.075	.5	0	4.003	.596
190			5	6.749	-.1	-.043	.076	-.003	.816
191	3	M7	1	4.394	.413	-.182	0	0	0
192			2	4.336	.413	-.182	0	-.486	-1.101
193			3	4.279	.413	-.182	0	-.972	-2.202
194			4	4.222	.413	-.182	0	-1.458	-3.303
195			5	2.76	.346	-.001	-.084	-.002	-4.349
196	3	M8	1	4.394	.413	.182	0	0	0
197			2	4.336	.413	.182	0	.486	-1.101
198			3	4.279	.413	.182	0	.972	-2.202
199			4	4.222	.413	.182	0	1.458	-3.303
200			5	2.76	.346	.001	.084	.002	-4.349
201	3	M9	1	.173	-.177	-.038	-.005	.182	-.007
202			2	.252	1.866	-.002	0	.004	.94
203			3	.252	-1.926	-.002	0	-.017	1.297
204			4	.359	1.032	-.007	.002	-.002	-6.02
205			5	.359	-2.76	-.007	.002	-.084	4.349
206	3	M10	1	.173	-.177	.038	.005	-.182	-.007
207			2	.252	1.866	.002	0	-.004	.94
208			3	.252	-1.926	.002	0	.017	1.297
209			4	.359	1.032	.007	-.002	.002	-6.02
210			5	.359	-2.76	.007	-.002	.084	4.349
211	3	M11	1	.038	.176	-.173	-.007	.182	-.005
212			2	.038	.121	-.023	-.007	-.112	-.45
213			3	.038	-.066	-.127	.007	.044	-.731
214			4	.038	-.121	.023	.007	-.112	-.45
215			5	.038	-.176	.173	.007	.182	-.005
216	3	M12	1	.175	1.405	-.052	0	.084	1.79

Member Section Forces (Continued)

	LC	Member Label	Sec	Axial[k]	y Shear[k]	z Shear[k]	Torque[k-ft]	y-y Mo...	z-z Mo...
217			2	.175	1.35	-.052	0	-.071	-2.344
218			3	.175	-1.296	.052	0	-.225	-6.313
219			4	.175	-1.35	.052	0	-.071	-2.344
220			5	.175	-1.405	.052	0	.084	1.79
221	3	M13	1	.505	3.785	-.032	0	.076	4.885
222			2	.505	3.73	-.032	0	-.019	-6.387
223			3	.505	-3.675	.032	0	-.114	-17.495
224			4	.505	-3.73	.032	0	-.019	-6.387
225			5	.505	-3.785	.032	0	.076	4.885
226	3	M14	1	.34	2.867	-.045	0	.135	3.711
227			2	.34	2.812	-.045	0	0	-4.808
228			3	.34	2.757	-.045	0	-.133	-13.163
229			4	.34	-2.812	.045	0	0	-4.808
230			5	.34	-2.867	.045	0	.135	3.711
231	3	M15	1	.254	.132	0	0	0	.015
232			2	.165	1.75	0	0	0	-.323
233			3	.165	-2.146	0	0	0	2.054
234			4	.102	1.304	0	0	0	-7.653
235			5	.102	-2.591	0	0	0	.063
236	3	M18	1	0	0	0	0	0	0
237			2	0	0	0	0	0	0
238			3	0	0	0	0	0	0
239			4	0	0	0	0	0	0
240			5	0	0	0	0	0	0
241	3	M19	1	5.512	-.093	0	0	0	-.078
242			2	5.512	-.093	0	0	0	-.058
243			3	5.512	-.093	0	0	0	-.039
244			4	5.512	-.093	0	0	0	-.019
245			5	5.512	-.093	0	0	0	0
246	3	M20	1	7.345	-.077	0	0	0	-.065
247			2	7.345	-.077	0	0	0	-.048
248			3	7.345	-.077	0	0	0	-.032
249			4	7.345	-.077	0	0	0	-.016
250			5	7.345	-.077	0	0	0	0
251	3	M21	1	2.591	-.075	0	0	0	-.063
252			2	2.591	-.075	0	0	0	-.047
253			3	2.591	-.075	0	0	0	-.032
254			4	2.591	-.075	0	0	0	-.016
255			5	2.591	-.075	0	0	0	0
256	4	M3	1	5.595	-.075	.346	0	0	0
257			2	5.552	-.075	.301	0	.862	.201
258			3	5.509	-.075	.256	0	1.605	.403
259			4	5.467	-.075	.211	0	2.228	.604
260			5	4.306	-.21	.833	-.637	.006	.917
261	4	M4	1	7.499	-.016	.855	0	0	0
262			2	7.456	-.016	.855	0	2.281	.044
263			3	7.413	-.016	.855	0	4.562	.087
264			4	7.37	-.016	.855	0	6.842	.131
265			5	4.248	-.06	.05	.108	0	.212
266	4	M5	1	6.715	-.223	.31	0	0	0
267			2	6.672	-.223	.265	0	.767	.594
268			3	6.629	-.223	.22	0	1.414	1.188
269			4	6.586	-.223	.175	0	1.942	1.782
270			5	4.885	-.23	1.068	-.109	.003	2.382
271	4	M6	1	8.878	-.139	1	0	0	0
272			2	8.835	-.139	1	0	2.669	.371
273			3	8.793	-.139	1	0	5.337	.742

Member Section Forces (Continued)

	LC	Member Label	Sec	Axial[k]	y Shear[k]	z Shear[k]	Torque[k-ft]	y-y Mo...	z-z Mo...
274			4	8.75	-.139	1	0	8.006	1.113
275			5	4.896	-.132	-.027	-.004	-.001	1.478
276	4	M7	1	2.532	.161	.246	0	0	0
277			2	2.489	.161	.201	0	.596	-.43
278			3	2.446	.161	.156	0	1.073	-.86
279			4	2.403	.161	.111	0	1.43	-1.29
280			5	1.891	.416	.476	1.257	-.002	-1.934
281	4	M8	1	3.663	.233	.454	0	0	0
282			2	3.62	.233	.454	0	1.212	-.621
283			3	3.577	.233	.454	0	2.423	-1.243
284			4	3.534	.233	.454	0	3.635	-1.864
285			5	1.94	.236	.006	.068	0	-2.487
286	4	M9	1	.053	-.11	-.047	-.001	.174	-.005
287			2	.109	1.395	.009	0	-.059	.992
288			3	.109	-1.348	.009	0	.049	.714
289			4	.243	.804	-.007	0	.022	-4.329
290			5	.243	-1.94	-.007	0	-.068	2.487
291	4	M10	1	-.011	-.109	.081	.007	.052	-.006
292			2	.193	1.454	.292	0	.029	1.452
293			3	.193	-1.29	-.308	0	-.067	.466
294			4	.424	.852	.128	-.002	.812	-4.298
295			5	.424	-1.891	-.472	-.002	-1.257	1.934
296	4	M11	1	.081	.109	.011	-.006	-.052	-.007
297			2	.081	.067	.011	-.006	-.02	-.271
298			3	.081	-.027	.053	-.006	-.144	-.412
299			4	.047	-.068	.053	.005	.015	-.268
300			5	.047	-.109	.053	.005	.174	-.001
301	4	M12	1	.416	.47	.256	0	-1.257	-2.013
302			2	.416	.428	.256	0	-.489	-3.36
303			3	.431	-1.47	-.007	0	.28	-4.595
304			4	.431	-1.511	-.007	0	.09	-.124
305			5	.431	-1.552	-.007	0	.068	4.47
306	4	M13	1	.966	1.661	-.027	0	.109	-3.132
307			2	.966	1.62	-.027	0	.028	-8.054
308			3	.966	-3.732	.005	0	-.053	-12.853
309			4	.937	-3.774	.005	0	-.02	-1.567
310			5	.937	-3.815	.005	0	-.004	9.816
311	4	M14	1	.69	1.12	-.142	0	.637	-3.283
312			2	.69	1.079	-.142	0	.211	-6.581
313			3	.738	-2.999	.048	0	-.216	-9.794
314			4	.738	-3.041	.048	0	-.035	-.733
315			5	.738	-3.082	.048	0	.108	8.45
316	4	M15	1	-.042	.053	-.034	0	.156	.011
317			2	-.232	1.275	.014	0	-.094	-.05
318			3	-.232	-1.537	.014	0	.075	1.525
319			4	-.264	.956	-.014	0	.002	-5.631
320			5	-.264	-1.856	-.014	0	-.168	-.233
321	4	M18	1	0	0	0	0	0	0
322			2	0	0	0	0	0	0
323			3	0	0	0	0	0	0
324			4	0	0	0	0	0	0
325			5	0	0	0	0	0	0
326	4	M19	1	4.033	-.191	.045	-.037	0	-.16
327			2	4.033	-.191	.045	-.037	.01	-.12
328			3	4.033	-.191	.045	-.037	.019	-.08
329			4	4.033	-.191	.045	-.037	.029	-.04
330			5	4.033	-.191	.045	-.037	.038	0

Member Section Forces (Continued)

	LC	Member Label	Sec	Axial[k]	y Shear[k]	z Shear[k]	Torque[k-ft]	y-y Mo...	z-z Mo...
331	4	M20	1	5.305	-.04	-.033	-.017	0	-.034
332			2	5.305	-.04	-.033	-.017	-.007	-.025
333			3	5.305	-.04	-.033	-.017	-.014	-.017
334			4	5.305	-.04	-.033	-.017	-.021	-.008
335			5	5.305	-.04	-.033	-.017	-.028	0
336	4	M21	1	1.856	.279	.014	.168	0	.233
337			2	1.856	.279	.014	.168	.003	.175
338			3	1.856	.279	.014	.168	.006	.117
339			4	1.856	.279	.014	.168	.009	.058
340			5	1.856	.279	.014	.168	.011	0
341	5	M3	1	6.437	.168	-.27	0	0	0
342			2	6.394	.123	-.27	0	-.72	-.389
343			3	6.352	.078	-.27	0	-1.441	-.656
344			4	6.309	.032	-.27	0	-2.161	-.803
345			5	4.202	-.068	-.022	-.137	.003	-.783
346	5	M4	1	6.437	.168	.27	0	0	0
347			2	6.394	.123	.27	0	.72	-.389
348			3	6.352	.078	.27	0	1.441	-.656
349			4	6.309	.032	.27	0	2.161	-.803
350			5	4.202	-.068	.022	.137	-.003	-.783
351	5	M5	1	7.785	-.005	-.361	0	0	0
352			2	7.742	-.005	-.361	0	-.964	.014
353			3	7.699	-.005	-.361	0	-1.928	.029
354			4	7.656	-.005	-.361	0	-2.892	.043
355			5	4.877	-.042	.024	-.083	.002	.088
356	5	M6	1	7.785	-.005	.361	0	0	0
357			2	7.742	-.005	.361	0	.964	.014
358			3	7.699	-.005	.361	0	1.928	.029
359			4	7.656	-.005	.361	0	2.892	.043
360			5	4.877	-.042	-.024	.083	-.002	.088
361	5	M7	1	3.219	.335	-.132	0	0	0
362			2	3.176	.335	-.132	0	-.351	-.894
363			3	3.133	.335	-.132	0	-.703	-1.787
364			4	3.09	.335	-.132	0	-1.054	-2.681
365			5	2.03	.278	-.004	-.078	-.001	-3.527
366	5	M8	1	3.219	.335	.132	0	0	0
367			2	3.176	.335	.132	0	.351	-.894
368			3	3.133	.335	.132	0	.703	-1.787
369			4	3.09	.335	.132	0	1.054	-2.681
370			5	2.03	.278	.004	.078	.001	-3.527
371	5	M9	1	.172	-.136	-.037	-.004	.176	-.005
372			2	.238	1.324	-.002	0	.008	.489
373			3	.238	-1.42	-.002	0	-.019	1.064
374			4	.285	.714	-.007	.001	0	-4.367
375			5	.285	-2.03	-.007	.001	-.078	3.527
376	5	M10	1	.172	-.136	.037	.004	-.176	-.005
377			2	.238	1.324	.002	0	-.008	.489
378			3	.238	-1.42	.002	0	.019	1.064
379			4	.285	.714	.007	-.001	0	-4.367
380			5	.285	-2.03	.007	-.001	.078	3.527
381	5	M11	1	.037	.135	-.172	-.005	.176	-.004
382			2	.037	.094	-.022	-.005	-.115	-.347
383			3	.037	-.053	-.128	.005	.045	-.567
384			4	.037	-.094	.022	.005	-.115	-.347
385			5	.037	-.135	.172	.005	.176	-.004
386	5	M12	1	.125	1.018	-.047	0	.078	1.297
387			2	.125	.977	-.047	0	-.062	-1.695

Member Section Forces (Continued)

	LC	Member Label	Sec	Axial[k]	y Shear[k]	z Shear[k]	Torque[k-ft]	y-y Mo...	z-z Mo...
388			3	.125	-.936	.047	0	-.203	-4.563
389			4	.125	-.977	.047	0	-.062	-1.695
390			5	.125	-1.018	.047	0	.078	1.297
391	5	M13	1	.366	2.738	-.035	0	.083	3.536
392			2	.366	2.697	-.035	0	-.022	-4.616
393			3	.366	-2.656	.035	0	-.126	-12.645
394			4	.366	-2.697	.035	0	-.022	-4.616
395			5	.366	-2.738	.035	0	.083	3.536
396	5	M14	1	.235	2.064	-.047	0	.137	2.677
397			2	.235	2.023	-.047	0	-.004	-3.454
398			3	.235	1.982	-.047	0	-.145	-9.461
399			4	.235	-2.023	.047	0	-.004	-3.454
400			5	.235	-2.064	.047	0	.137	2.677
401	5	M15	1	.256	.105	0	0	0	.011
402			2	.162	1.256	0	0	0	-.313
403			3	.162	-1.556	0	0	0	1.483
404			4	.093	.941	0	0	0	-5.51
405			5	.093	-1.871	0	0	0	.066
406	5	M18	1	0	0	0	0	0	0
407			2	0	0	0	0	0	0
408			3	0	0	0	0	0	0
409			4	0	0	0	0	0	0
410			5	0	0	0	0	0	0
411	5	M19	1	3.963	-.096	0	0	0	-.081
412			2	3.963	-.096	0	0	0	-.061
413			3	3.963	-.096	0	0	0	-.04
414			4	3.963	-.096	0	0	0	-.02
415			5	3.963	-.096	0	0	0	0
416	5	M20	1	5.309	-.076	0	0	0	-.064
417			2	5.309	-.076	0	0	0	-.048
418			3	5.309	-.076	0	0	0	-.032
419			4	5.309	-.076	0	0	0	-.016
420			5	5.309	-.076	0	0	0	0
421	5	M21	1	1.871	-.079	0	0	0	-.066
422			2	1.871	-.079	0	0	0	-.05
423			3	1.871	-.079	0	0	0	-.033
424			4	1.871	-.079	0	0	0	-.017
425			5	1.871	-.079	0	0	0	0
426	6	M3	1	-3.638	.013	.683	0	0	0
427			2	-3.681	.013	.639	0	1.763	-.035
428			3	-3.723	.013	.594	0	3.407	-.07
429			4	-3.766	.013	.549	0	4.931	-.106
430			5	-1.944	-.136	.815	-.641	0	-.016
431	6	M4	1	-1.98	.064	.365	0	0	0
432			2	-2.023	.064	.365	0	.973	-.172
433			3	-2.066	.064	.365	0	1.947	-.344
434			4	-2.108	.064	.365	0	2.92	-.516
435			5	-1.995	.003	.042	.137	.004	-.636
436	6	M5	1	-4.612	.034	.773	0	0	0
437			2	-4.655	.034	.728	0	2.002	-.091
438			3	-4.698	.034	.683	0	3.884	-.181
439			4	-4.741	.034	.638	0	5.646	-.272
440			5	-2.422	-.005	1.036	-.138	0	-.33
441	6	M6	1	-2.757	.106	.351	0	0	0
442			2	-2.8	.106	.351	0	.935	-.284
443			3	-2.843	.106	.351	0	1.87	-.568
444			4	-2.885	.106	.351	0	2.805	-.852

Member Section Forces (Continued)

	LC	Member Label	Sec	Axial[k]	y Shear[k]	z Shear[k]	Torque[k-ft]	y-y Mo...	z-z Mo...
445			5	-2.412	.094	-.019	.016	.002	-1.125
446	6	M7	1	-1.741	-.145	.419	0	0	0
447			2	-1.784	-.145	.374	0	1.059	.386
448			3	-1.827	-.145	.33	0	1.998	.772
449			4	-1.87	-.145	.285	0	2.817	1.158
450			5	-.952	125	.471	1.262	0	1.318
451	6	M8	1	-.69	-.081	.237	0	0	0
452			2	-.733	-.081	.237	0	.632	.217
453			3	-.776	-.081	.237	0	1.264	.435
454			4	-.819	-.081	.237	0	1.895	652
455			5	-.91	-.05	.003	.024	-.001	.843
456	6	M9	1	049	-.02	-.043	004	153	.003
457			2	.046	-.681	.005	0	-.034	-.422
458			3	.046	.653	.005	0	027	-.258
459			4	-.048	-.424	-.004	-.001	.028	2.067
460			5	-.048	91	-.004	-.001	-.024	-.843
461	6	M10	1	-.015	-.019	.077	0	.077	.002
462			2	.121	-.629	.293	0	.021	-.017
463			3	.121	.705	-.307	0	-.066	-.478
464			4	127	-.382	.129	0	795	2.097
465			5	.127	.952	-.471	0	-1.262	-1.318
466	6	M11	1	.077	.019	.015	.002	-.077	0
467			2	.077	-.022	.015	.002	-.031	.004
468			3	.077	063	.049	-.003	-.143	.139
469			4	.043	.022	.049	-.003	.005	.007
470			5	.043	-.02	.049	-.003	153	.004
471	6	M12	1	.223	-.961	.271	0	-1.262	-3.71
472			2	223	-1.002	.271	0	-.449	-.766
473			3	.236	-1.043	.271	0	.365	2.302
474			4	236	-.007	-.033	0	122	2.25
475			5	.236	-.048	-.033	0	.024	2.333
476	6	M13	1	.407	-2.362	-.04	0	.138	-7.66
477			2	.407	-2.403	-.04	0	.017	-.513
478			3	.407	-2.444	-.04	0	-.105	6.777
479			4	.382	.558	.016	0	-.033	5.042
480			5	.382	517	.016	0	.016	3.43
481	6	M14	1	.285	-1.866	-.151	0	.641	-6.596
482			2	285	-1.907	-.151	0	.189	-.937
483			3	.332	-1.948	-.151	0	-.263	4.844
484			4	332	.197	063	0	-.053	4.15
485			5	.332	.156	.063	0	.137	3.619
486	6	M15	1	-.034	-.126	-.034	0	157	-.005
487			2	-.247	-.704	.012	0	-.084	.424
488			3	-.247	904	012	0	.065	-.775
489			4	-.304	-.531	-.012	0	-.003	3.021
490			5	-.304	1.077	-.012	0	-.145	-.258
491	6	M18	1	0	0	0	0	0	0
492			2	0	0	0	0	0	0
493			3	0	0	0	0	0	0
494			4	0	0	0	0	0	0
495			5	0	0	0	0	0	0
496	6	M19	1	-2.186	-.215	.048	-.02	0	-.18
497			2	-2.186	-.215	.048	-.02	.011	-.135
498			3	-2.186	-.215	.048	-.02	.021	-.09
499			4	-2.186	-.215	.048	-.02	.03	-.045
500			5	-2.186	-.215	048	-.02	.04	0
501	6	M20	1	-3.042	-.058	-.022	-.023	0	-.049

Member Section Forces (Continued)

	LC	Member Label	Sec	Axial[k]	v Shear[k]	z Shear[k]	Torque[k-ft]	y-y Mo...	z-z Mo...
502			2	-3.042	-.058	-.022	-.023	-.004	-.037
503			3	-3.042	-.058	-.022	-.023	-.009	-.024
504			4	-3.042	-.058	-.022	-.023	-.014	-.012
505			5	-3.042	-.058	-.022	-.023	-.019	0
506	6	M21	1	-1.077	.308	.013	.145	0	.258
507			2	-1.077	.308	.013	.145	.002	.193
508			3	-1.077	.308	.013	.145	.005	.129
509			4	-1.077	.308	.013	.145	.008	.064
510			5	-1.077	.308	.013	.145	.01	0
511	7	M3	1	-2.902	.232	.143	0	0	0
512			2	-2.945	.187	.143	0	.381	-.559
513			3	-2.988	.141	.143	0	.762	-.997
514			4	-3.031	.096	.143	0	1.143	-1.313
515			5	-2.033	0	-.025	-.153	-.002	-1.466
516	7	M4	1	-2.902	.232	-.143	0	0	0
517			2	-2.945	.187	-.143	0	-.381	-.559
518			3	-2.988	.141	-.143	0	-.762	-.997
519			4	-3.031	.096	-.143	0	-1.143	-1.313
520			5	-2.033	0	.025	.153	.002	-1.466
521	7	M5	1	-3.697	.219	.195	0	0	0
522			2	-3.739	.219	.195	0	.52	-.585
523			3	-3.782	.219	.195	0	1.039	-1.171
524			4	-3.825	.219	.195	0	1.559	-1.756
525			5	-2.429	.184	.006	-.106	-.001	-2.311
526	7	M6	1	-3.697	.219	-.195	0	0	0
527			2	-3.739	.219	-.195	0	-.52	-.585
528			3	-3.782	.219	-.195	0	-1.039	-1.171
529			4	-3.825	.219	-.195	0	-1.559	-1.756
530			5	-2.429	.184	-.006	.106	.001	-2.311
531	7	M7	1	-1.111	.006	.064	0	0	0
532			2	-1.153	.006	.064	0	.169	-.015
533			3	-1.196	.006	.064	0	.339	-.03
534			4	-1.239	.006	.064	0	.508	-.044
535			5	-.833	-.02	-.005	-.053	0	-.038
536	7	M8	1	-1.111	.006	-.064	0	0	0
537			2	-1.153	.006	-.064	0	-.169	-.015
538			3	-1.196	.006	-.064	0	-.339	-.03
539			4	-1.239	.006	-.064	0	-.508	-.044
540			5	-.833	-.02	.005	.053	0	-.038
541	7	M9	1	.168	-.041	-.033	.002	.153	.003
542			2	.167	-.741	-.005	0	.024	-.841
543			3	.167	.594	-.005	0	-.031	.042
544			4	-.017	-.501	-.006	0	.013	2.032
545			5	-.017	.833	-.006	0	-.053	.038
546	7	M10	1	.168	-.041	.033	-.002	-.153	.003
547			2	.167	-.741	.005	0	-.024	-.841
548			3	.167	.594	.005	0	.031	.042
549			4	-.017	-.501	.006	0	-.013	2.032
550			5	-.017	.833	.006	0	.053	.038
551	7	M11	1	.033	.041	-.168	.003	.153	.002
552			2	.033	0	-.018	.003	-.125	-.06
553			3	.033	-.041	.132	-.003	.046	0
554			4	.033	0	.018	-.003	-.125	-.06
555			5	.033	-.041	.168	-.003	.153	.002
556	7	M12	1	-.069	-.448	-.026	0	.053	-.62
557			2	-.069	-.49	-.026	0	-.026	.787
558			3	-.069	.531	.026	0	-.105	2.318

Member Section Forces (Continued)

	LC	Member Label	Sec	Axial[k]	y Shear[k]	z Shear[k]	Torque[k-ft]	y-y Mo...	z-z Mo...
559			4	-.069	.49	.026	0	-.026	.787
560			5	-.069	.448	.026	0	.053	-.62
561	7	M13	1	-.194	-1.439	-.047	0	.106	-1.922
562			2	-.194	-1.48	-.047	0	-.033	2.456
563			3	-.194	1.521	.047	0	-.173	6.958
564			4	-.194	1.48	.047	0	-.033	2.456
565			5	-.194	1.439	.047	0	.106	-1.922
566	7	M14	1	-.171	-1.04	-.059	0	.153	-1.385
567			2	-.171	-1.081	-.059	0	-.024	1.796
568			3	-.171	-1.122	-.059	0	-.2	5.1
569			4	-.171	1.081	.059	0	-.024	1.796
570			5	-.171	1.04	.059	0	.153	-1.385
571	7	M15	1	.264	-.082	0	0	0	-.005
572			2	.146	-.719	0	0	0	.207
573			3	.146	.889	0	0	0	-.816
574			4	.053	-.546	0	0	0	3.132
575			5	.053	1.062	0	0	0	.04
576	7	M18	1	0	0	0	0	0	0
577			2	0	0	0	0	0	0
578			3	0	0	0	0	0	0
579			4	0	0	0	0	0	0
580			5	0	0	0	0	0	0
581	7	M19	1	-2.245	-.119	0	0	0	-.099
582			2	-2.245	-.119	0	0	0	-.075
583			3	-2.245	-.119	0	0	0	-.05
584			4	-2.245	-.119	0	0	0	-.025
585			5	-2.245	-.119	0	0	0	0
586	7	M20	1	-3.043	-.096	0	0	0	-.08
587			2	-3.043	-.096	0	0	0	-.06
588			3	-3.043	-.096	0	0	0	-.04
589			4	-3.043	-.096	0	0	0	-.02
590			5	-3.043	-.096	0	0	0	0
591	7	M21	1	-1.062	-.048	0	0	0	-.04
592			2	-1.062	-.048	0	0	0	-.03
593			3	-1.062	-.048	0	0	0	-.02
594			4	-1.062	-.048	0	0	0	-.01
595			5	-1.062	-.048	0	0	0	0

Member Section Deflections

	LC	Member Label	Sec	x [in]	y [in]	z [in]	x Rotate[rad]	(n) L/y Ratio	(n) L/z Ratio
1	1	M3	1	0	0	0	1.315e-3	NC	NC
2			2	-.003	.082	-.073	1.315e-3	9372.911	1746.31
3			3	-.005	.159	-.153	1.315e-3	5858.317	835.119
4			4	-.008	.225	-.248	1.315e-3	6696.108	516.934
5			5	-.01	.275	-.364	1.389e-3	NC	351.599
6	1	M4	1	0	0	0	-5.983e-4	NC	NC
7			2	-.003	.065	-.167	-5.983e-4	NC	1382.284
8			3	-.006	.127	-.297	-5.983e-4	8168.533	867.903
9			4	-.009	.181	-.351	-5.983e-4	9335.698	1008.443
10			5	-.011	.222	-.298	-6.081e-4	NC	NC
11	1	M5	1	0	0	0	-4.504e-5	NC	NC
12			2	-.003	.11	-.071	-4.504e-5	3100.544	1795.793
13			3	-.006	.204	-.155	-4.504e-5	1937.857	827.208
14			4	-.01	.264	-.264	-4.504e-5	2214.724	485.63
15			5	-.012	.275	-.41	-3.721e-5	NC	312.072
16	1	M6	1	0	0	0	-4.002e-4	NC	NC

Member Section Forces (Continued)

	LC	Member Label	Sec	Axial[k]	y Shear[k]	z Shear[k]	Torque[k-ft]	y-y Mo...	z-z Mo...
559			4	-.069	.49	.026	0	-.026	.787
560			5	-.069	.448	.026	0	.053	-.62
561	7	M13	1	-.194	-1.439	-.047	0	.106	-1.922
562			2	-.194	-1.48	-.047	0	-.033	2.456
563			3	-.194	1.521	.047	0	-.173	6.958
564			4	-.194	1.48	.047	0	-.033	2.456
565			5	-.194	1.439	.047	0	.106	-1.922
566	7	M14	1	-.171	-1.04	-.059	0	.153	-1.385
567			2	-.171	-1.081	-.059	0	-.024	1.796
568			3	-.171	-1.122	-.059	0	-.2	5.1
569			4	-.171	1.081	.059	0	-.024	1.796
570			5	-.171	1.04	.059	0	.153	-1.385
571	7	M15	1	.264	-.082	0	0	0	-.005
572			2	.146	-.719	0	0	0	.207
573			3	.146	.889	0	0	0	-.816
574			4	.053	-.546	0	0	0	3.132
575			5	.053	1.062	0	0	0	.04
576	7	M18	1	0	0	0	0	0	0
577			2	0	0	0	0	0	0
578			3	0	0	0	0	0	0
579			4	0	0	0	0	0	0
580			5	0	0	0	0	0	0
581	7	M19	1	-2.245	-.119	0	0	0	-.099
582			2	-2.245	-.119	0	0	0	-.075
583			3	-2.245	-.119	0	0	0	-.05
584			4	-2.245	-.119	0	0	0	-.025
585			5	-2.245	-.119	0	0	0	0
586	7	M20	1	-3.043	-.096	0	0	0	-.08
587			2	-3.043	-.096	0	0	0	-.06
588			3	-3.043	-.096	0	0	0	-.04
589			4	-3.043	-.096	0	0	0	-.02
590			5	-3.043	-.096	0	0	0	0
591	7	M21	1	-1.062	-.048	0	0	0	-.04
592			2	-1.062	-.048	0	0	0	-.03
593			3	-1.062	-.048	0	0	0	-.02
594			4	-1.062	-.048	0	0	0	-.01
595			5	-1.062	-.048	0	0	0	0

Member Section Deflections

	LC	Member Label	Sec	x [in]	y [in]	z [in]	x Rotate[rad]	(n) L/y Ratio	(n) L/z Ratio
1	1	M3	1	0	0	0	1.315e-3	NC	NC
2			2	-.003	.082	-.073	1.315e-3	9372.911	1746.31
3			3	-.005	.159	-.153	1.315e-3	5858.317	835.119
4			4	-.008	.225	-.248	1.315e-3	6696.108	516.934
5			5	-.01	.275	-.364	1.389e-3	NC	351.599
6	1	M4	1	0	0	0	-5.983e-4	NC	NC
7			2	-.003	.065	-.167	-5.983e-4	NC	1382.284
8			3	-.006	.127	-.297	-5.983e-4	8168.533	867.903
9			4	-.009	.181	-.351	-5.983e-4	9335.698	1008.443
10			5	-.011	.222	-.298	-6.081e-4	NC	NC
11	1	M5	1	0	0	0	-4.504e-5	NC	NC
12			2	-.003	.11	-.071	-4.504e-5	3100.544	1795.793
13			3	-.006	.204	-.155	-4.504e-5	1937.857	827.208
14			4	-.01	.264	-.264	-4.504e-5	2214.724	485.63
15			5	-.012	.275	-.41	-3.721e-5	NC	312.072
16	1	M6	1	0	0	0	-4.002e-4	NC	NC

Member Section Deflections (Continued)

	LC	Member Label	Sec	x [in]	y [in]	z [in]	x Rotate[rad]	(n) L/y Ratio	(n) L/z Ratio
17			2	-.003	.091	-.195	-4.002e-4	3573.968	1123.195
18			3	-.007	.169	-.343	-4.002e-4	2233.743	705.205
19			4	-.01	.217	-.399	-4.002e-4	2552.856	819.303
20			5	-.013	.223	-.324	-3.954e-4	NC	NC
21	1	M7	1	0	0	0	-4.122e-3	NC	NC
22			2	-.001	.032	-.043	-4.122e-3	3972.726	2969.406
23			3	-.002	.079	-.088	-4.122e-3	1616.876	1455.986
24			4	-.004	.156	-.137	-4.122e-3	822.83	933.386
25			5	-.005	.276	-.194	-4.269e-3	463.579	658.943
26	1	M8	1	0	0	0	-3.559e-5	NC	NC
27			2	-.001	.014	-.087	-3.559e-5	8931.625	2759.545
28			3	-.003	.045	-.155	-3.559e-5	2828.553	1732.635
29			4	-.004	.109	-.186	-3.559e-5	1170.503	2013.129
30			5	-.005	.223	-.163	-4.872e-5	573.422	NC
31	1	M9	1	-.222	-.365	-.398	3.069e-4	1601.834	NC
32			2	-.223	-.044	-.285	2.805e-3	NC	NC
33			3	-.223	-.055	-.328	3.373e-3	NC	NC
34			4	-.223	-.296	-.255	2.619e-3	1978.175	NC
35			5	-.223	-.005	-.163	1.205e-3	NC	NC
36	1	M10	1	-.275	-.378	-.398	-1.245e-4	1542.847	NC
37			2	-.275	-.039	-.552	-4.084e-3	NC	2813.222
38			3	-.275	-.054	-.557	-4.74e-3	NC	2206.054
39			4	-.276	-.297	-.746	-3.725e-3	1973.827	1149.691
40			5	-.276	-.005	-.194	-1.874e-3	NC	NC
41	1	M11	1	.398	-.378	-.275	-4.65e-3	NC	2733.477
42			2	.398	-.382	-.259	-3.546e-3	NC	3895.529
43			3	.398	-.382	-.244	-2.442e-3	NC	6607.149
44			4	.398	-.375	-.236	-3.472e-3	NC	NC
45			5	.398	-.365	-.222	-4.503e-3	NC	NC
46	1	M12	1	.175	-.004	-.233	-4.068e-3	NC	2794.219
47			2	.175	-.069	-.159	-4.025e-3	2249.181	6403.871
48			3	.175	-.097	-.164	-3.982e-3	1564.503	8619.926
49			4	.175	-.061	-.176	-3.939e-3	2585.54	NC
50			5	.175	-.005	-.181	-3.896e-3	NC	NC
51	1	M13	1	.36	-.012	-.278	-8.654e-6	NC	NC
52			2	.36	-.186	-.272	2.336e-5	825.349	NC
53			3	.36	-.267	-.26	5.538e-5	564.387	NC
54			4	.36	-.17	-.243	8.74e-5	916.853	NC
55			5	.359	-.013	-.226	1.194e-4	NC	NC
56	1	M14	1	.325	-.01	-.282	-1.44e-3	NC	NC
57			2	.325	-.144	-.272	-1.387e-3	1073.975	6190.136
58			3	.325	-.205	-.247	-1.335e-3	740.735	NC
59			4	.325	-.129	-.228	-1.282e-3	1215.159	NC
60			5	.325	-.011	-.211	-1.229e-3	NC	NC
61	1	M15	1	-.244	-.382	-.398	9.168e-5	NC	NC
62			2	-.244	-.281	-.309	2.637e-4	NC	NC
63			3	-.244	-.289	-.361	2.829e-4	NC	7666.195
64			4	-.244	-.608	-.271	2.286e-4	1309.533	NC
65			5	-.244	-.097	-.174	1.375e-4	NC	NC
66	1	M18	1	.382	.244	.398	4.265e-4	NC	NC
67			2	.382	.238	.398	4.265e-4	NC	NC
68			3	.382	.232	.399	4.265e-4	NC	NC
69			4	.382	.226	.399	4.265e-4	NC	NC
70			5	.382	.22	.399	4.265e-4	NC	NC
71	1	M19	1	.205	.244	.322	6.6e-4	NC	NC
72			2	.205	.245	.323	6.6e-4	NC	NC
73			3	.205	.246	.324	6.6e-4	NC	NC

Member Section Deflections (Continued)

	LC	Member Label	Sec	x [in]	y [in]	z [in]	x Rotate[rad]	(n) L/y Ratio	(n) L/z Ratio
74			4	.205	.246	.324	6.6e-4	NC	NC
75			5	.205	.247	.325	6.6e-4	NC	NC
76	1	M20	1	.267	.244	.357	4.164e-4	NC	NC
77			2	.267	.248	.358	4.164e-4	NC	NC
78			3	.267	.252	.358	4.164e-4	NC	NC
79			4	.267	.256	.359	4.164e-4	NC	NC
80			5	.267	.26	.36	4.164e-4	NC	NC
81	1	M21	1	.097	.244	.174	-3.111e-4	NC	NC
82			2	.097	.224	.174	-3.111e-4	NC	NC
83			3	.097	.204	.175	-3.111e-4	NC	NC
84			4	.097	.184	.175	-3.111e-4	NC	NC
85			5	.097	.164	.175	-3.111e-4	NC	NC
86	2	M3	1	0	0	0	2.239e-3	NC	NC
87			2	-.002	.077	-.194	2.239e-3	NC	4895.759
88			3	-.004	.148	-.377	2.239e-3	6348.06	3155.385
89			4	-.006	.209	-.538	2.239e-3	7257.256	3813.195
90			5	-.008	.256	-.673	2.39e-3	NC	NC
91	2	M4	1	0	0	0	-7.993e-4	NC	NC
92			2	-.003	.043	-.274	-7.993e-4	NC	1070.819
93			3	-.005	.084	-.498	-7.993e-4	NC	672.352
94			4	-.008	.121	-.626	-7.993e-4	NC	781.273
95			5	-.01	.152	-.616	-8.234e-4	NC	NC
96	2	M5	1	0	0	0	-3.125e-4	NC	NC
97			2	-.003	.101	-.206	-3.125e-4	3433.156	6935.727
98			3	-.005	.188	-.403	-3.125e-4	2145.754	4523.646
99			4	-.008	.244	-.584	-3.125e-4	2452.377	5580.316
100			5	-.01	.256	-.749	-2.886e-4	NC	NC
101	2	M6	1	0	0	0	-5.384e-4	NC	NC
102			2	-.003	.065	-.31	-5.384e-4	4820.149	902.784
103			3	-.006	.119	-.563	-5.384e-4	3012.619	586.824
104			4	-.009	.152	-.7	-5.384e-4	3443.038	658.558
105			5	-.012	.153	-.674	-5.363e-4	NC	NC
106	2	M7	1	0	0	0	-7.531e-3	NC	NC
107			2	0	.036	-.11	-7.531e-3	3594.845	6821.577
108			3	-.002	.083	-.212	-7.531e-3	1548.445	4437.981
109			4	-.003	.153	-.298	-7.531e-3	838.679	5428.696
110			5	-.004	.257	-.366	-7.829e-3	498.259	NC
111	2	M8	1	0	0	0	-7.203e-4	NC	NC
112			2	-.001	0	-.147	-7.203e-4	NC	2063.787
113			3	-.002	.016	-.268	-7.203e-4	7963.602	1295.799
114			4	-.004	.062	-.339	-7.203e-4	2067.966	1505.615
115			5	-.005	.153	-.339	-7.391e-4	836.289	NC
116	2	M9	1	-.152	-.305	-.777	3.682e-4	1920.019	NC
117			2	-.152	-.039	-.601	1.721e-3	NC	8584.889
118			3	-.152	-.047	-.678	2.166e-3	NC	4817.933
119			4	-.153	-.25	-.554	1.655e-3	2348.766	5448.182
120			5	-.153	-.005	-.339	6.659e-4	NC	NC
121	2	M10	1	-.256	-.331	-.777	-9.519e-6	1761.286	NC
122			2	-.256	-.029	-1.036	-4.211e-3	NC	1592.188
123			3	-.256	-.045	-1.048	-4.821e-3	NC	1209.581
124			4	-.256	-.25	-1.414	-3.81e-3	2336.773	609.333
125			5	-.257	-.004	-.366	-1.987e-3	NC	NC
126	2	M11	1	.777	-.331	-.256	-4.061e-3	NC	1392.355
127			2	.777	-.331	-.221	-3.082e-3	NC	2104.873
128			3	.777	-.327	-.191	-2.104e-3	NC	3747.119
129			4	.777	-.318	-.174	-2.938e-3	NC	6611.985
130			5	.777	-.305	-.152	-3.772e-3	NC	NC

Member Section Deflections (Continued)

	LC	Member Label	Sec	x [in]	y [in]	z [in]	x Rotate[rad]	(n) L/y Ratio	(n) L/z Ratio
131	2	M12	1	.346	-.003	-.22	-3.493e-3	NC	1423.207
132			2	.346	-.063	-.098	-3.409e-3	2434.372	6820.816
133			3	.346	-.082	-.122	-3.325e-3	1841.662	NC
134			4	.346	-.047	-.133	-3.241e-3	3371.135	NC
135			5	.346	-.005	-.119	-3.157e-3	NC	NC
136	2	M13	1	.698	-.009	-.258	-6.501e-5	NC	1414.953
137			2	.698	-.168	-.235	-2.059e-6	911.072	1821.809
138			3	.697	-.227	-.204	6.089e-5	663.842	3049.027
139			4	.697	-.135	-.177	1.238e-4	1158.622	6823.167
140			5	.697	-.011	-.156	1.868e-4	NC	NC
141	2	M14	1	.632	-.008	-.243	-1.342e-3	NC	1443.599
142			2	.632	-.131	-.25	-1.239e-3	1173.067	1350.267
143			3	.632	-.174	-.193	-1.136e-3	870.764	2899.134
144			4	.632	-.102	-.164	-1.032e-3	1557.809	7112.262
145			5	.632	-.01	-.143	-9.288e-4	NC	NC
146	2	M15	1	-.191	-.327	-.777	1.803e-4	NC	NC
147			2	-.191	-.238	-.6	5.127e-4	NC	8351.548
148			3	-.19	-.244	-.7	5.49e-4	NC	4119.88
149			4	-.19	-.515	-.526	4.452e-4	1550.328	7743.591
150			5	-.19	-.082	-.343	2.713e-4	NC	NC
151	2	M18	1	.327	.191	.777	8.39e-4	NC	NC
152			2	.327	.185	.778	8.39e-4	NC	NC
153			3	.327	.18	.778	8.39e-4	NC	NC
154			4	.327	.175	.779	8.39e-4	NC	NC
155			5	.327	.17	.779	8.39e-4	NC	NC
156	2	M19	1	.174	.191	.627	1.309e-3	NC	NC
157			2	.174	.191	.628	1.309e-3	NC	NC
158			3	.174	.192	.629	1.309e-3	NC	NC
159			4	.174	.192	.631	1.309e-3	NC	NC
160			5	.174	.193	.632	1.309e-3	NC	NC
161	2	M20	1	.227	.19	.692	8.173e-4	NC	NC
162			2	.227	.194	.693	8.173e-4	NC	NC
163			3	.227	.197	.695	8.173e-4	NC	NC
164			4	.227	.2	.696	8.173e-4	NC	NC
165			5	.227	.204	.697	8.173e-4	NC	NC
166	2	M21	1	.082	.19	.343	-6.387e-4	NC	NC
167			2	.082	.173	.344	-6.387e-4	NC	NC
168			3	.082	.156	.344	-6.387e-4	NC	NC
169			4	.082	.139	.345	-6.387e-4	NC	NC
170			5	.082	.122	.346	-6.387e-4	NC	NC
171	3	M3	1	0	0	0	1.221e-5	NC	NC
172			2	-.002	-.017	.039	1.221e-5	NC	2806.26
173			3	-.005	-.027	.059	1.221e-5	6691.837	1762.009
174			4	-.007	-.028	.042	1.221e-5	8239.441	2047.444
175			5	-.009	-.016	-.027	4.409e-5	NC	NC
176	3	M4	1	0	0	0	-1.221e-5	NC	NC
177			2	-.002	-.017	-.039	-1.221e-5	NC	2806.26
178			3	-.005	-.027	-.059	-1.221e-5	6691.837	1762.009
179			4	-.007	-.028	-.042	-1.221e-5	8239.441	2047.444
180			5	-.009	-.016	.027	-4.409e-5	NC	NC
181	3	M5	1	0	0	0	-3.071e-4	NC	NC
182			2	-.003	.005	.052	-3.071e-4	NC	2109.024
183			3	-.006	.007	.079	-3.071e-4	NC	1324.149
184			4	-.008	0	.056	-3.071e-4	NC	1538.328
185			5	-.011	-.016	-.036	-2.891e-4	8039.304	NC
186	3	M6	1	0	0	0	3.071e-4	NC	NC
187			2	-.003	.005	-.052	3.071e-4	NC	2109.024

Member Section Deflections (Continued)

	LC	Member Label	Sec	x [in]	y [in]	z [in]	x Rotate[rad]	(n) L/y Ratio	(n) L/z Ratio
188			3	-.006	.007	-.079	3.071e-4	NC	1324.149
189			4	-.008	0	-.056	3.071e-4	NC	1538.328
190			5	-.011	-.016	.036	2.891e-4	8039.304	NC
191	3	M7	1	0	0	0	-1.162e-3	NC	NC
192			2	-.001	-.055	.019	-1.162e-3	2509.876	5791.726
193			3	-.002	-.089	.029	-1.162e-3	1568.683	3636.458
194			4	-.003	-.083	.021	-1.162e-3	1792.794	4225.195
195			5	-.004	-.015	-.013	-1.142e-3	NC	NC
196	3	M8	1	0	0	0	1.162e-3	NC	NC
197			2	-.001	-.055	-.019	1.162e-3	2509.876	5791.726
198			3	-.002	-.089	-.029	1.162e-3	1568.683	3636.458
199			4	-.003	-.083	-.021	1.162e-3	1792.794	4225.195
200			5	-.004	-.015	.013	1.142e-3	NC	NC
201	3	M9	1	.017	-.279	0	2.341e-4	2094.316	NC
202			2	.016	-.047	.031	2.819e-3	NC	NC
203			3	.016	-.043	.044	3.346e-3	NC	NC
204			4	.016	-.245	.044	2.626e-3	2398.216	NC
205			5	.015	-.004	.013	1.282e-3	NC	NC
206	3	M10	1	.017	-.279	0	-2.341e-4	2094.316	NC
207			2	.016	-.047	-.031	-2.819e-3	NC	NC
208			3	.016	-.043	-.044	-3.346e-3	NC	NC
209			4	.016	-.245	-.044	-2.626e-3	2398.216	NC
210			5	.015	-.004	-.013	-1.282e-3	NC	NC
211	3	M11	1	0	-.279	.017	-3.545e-3	NC	NC
212			2	0	-.287	.045	-2.638e-3	NC	5010.732
213			3	0	-.291	.052	-1.73e-3	NC	4054.977
214			4	0	-.287	.045	-2.638e-3	NC	5010.732
215			5	0	-.279	.017	-3.545e-3	NC	NC
216	3	M12	1	0	-.004	.044	-2.527e-3	NC	NC
217			2	0	-.054	.091	-2.527e-3	2862.523	3084.449
218			3	0	-.082	.117	-2.527e-3	1860.386	1987.575
219			4	0	-.054	.091	-2.527e-3	2862.523	3084.449
220			5	0	-.004	.044	-2.527e-3	NC	NC
221	3	M13	1	0	-.01	.009	6.022e-4	NC	NC
222			2	0	-.149	.027	6.022e-4	1041.493	8144.689
223			3	0	-.223	.039	6.022e-4	675.928	4826.888
224			4	0	-.149	.027	6.022e-4	1041.493	8144.689
225			5	0	-.01	.009	6.022e-4	NC	NC
226	3	M14	1	0	-.009	.021	-4.296e-4	NC	NC
227			2	0	-.113	.034	-4.296e-4	1384.027	NC
228			3	0	-.169	.047	-4.296e-4	898.12	5527.645
229			4	0	-.113	.034	-4.296e-4	1384.027	NC
230			5	0	-.009	.021	-4.296e-4	NC	NC
231	3	M15	1	.052	-.291	0	0	NC	NC
232			2	.052	-.24	0	0	NC	NC
233			3	.052	-.244	0	0	9867.51	NC
234			4	.051	-.505	0	0	1553.115	NC
235			5	.051	-.082	0	0	NC	NC
236	3	M18	1	.291	-.052	0	0	NC	NC
237			2	.291	-.056	0	0	NC	NC
238			3	.291	-.061	0	0	NC	NC
239			4	.291	-.065	0	0	NC	NC
240			5	.291	-.069	0	0	NC	NC
241	3	M19	1	.169	-.052	0	0	NC	NC
242			2	.169	-.051	0	0	NC	NC
243			3	.169	-.05	0	0	NC	NC
244			4	.169	-.048	0	0	NC	NC

Member Section Deflections (Continued)

	LC	Member Label	Sec	x [in]	y [in]	z [in]	x Rotate[rad]	(n) L/y Ratio	(n) L/z Ratio
245			5	.169	-.047	0	0	NC	NC
246	3	M20	1	.223	-.052	0	0	NC	NC
247			2	.223	-.048	0	0	NC	NC
248			3	.223	-.045	0	0	NC	NC
249			4	.223	-.042	0	0	NC	NC
250			5	.223	-.039	0	0	NC	NC
251	3	M21	1	.082	-.051	0	0	NC	NC
252			2	.082	-.068	0	0	NC	NC
253			3	.082	-.084	0	0	NC	NC
254			4	.082	-.1	0	0	NC	NC
255			5	.082	-.117	0	0	NC	NC
256	4	M3	1	0	0	0	2.171e-3	NC	NC
257			2	-.001	.057	-.196	2.171e-3	NC	3543.058
258			3	-.003	.11	-.376	2.171e-3	8584.778	2266.902
259			4	-.004	.156	-.527	2.171e-3	9815.531	2708.706
260			5	-.006	.191	-.639	2.322e-3	NC	NC
261	4	M4	1	0	0	0	-7.097e-4	NC	NC
262			2	-.002	.025	-.253	-7.097e-4	NC	1234.03
263			3	-.004	.049	-.464	-7.097e-4	NC	774.835
264			4	-.006	.071	-.59	-7.097e-4	NC	900.378
265			5	-.008	.091	-.597	-7.353e-4	NC	NC
266	4	M5	1	0	0	0	-3.295e-4	NC	NC
267			2	-.002	.075	-.209	-3.295e-4	4653.355	4033.418
268			3	-.003	.14	-.403	-3.295e-4	2908.404	2588.574
269			4	-.005	.182	-.571	-3.295e-4	3324.067	3110.657
270			5	-.007	.191	-.707	-3.036e-4	NC	NC
271	4	M6	1	0	0	0	-4.583e-4	NC	NC
272			2	-.002	.04	-.284	-4.583e-4	7451.427	1054.515
273			3	-.005	.073	-.519	-4.583e-4	4657.198	662.093
274			4	-.007	.092	-.655	-4.583e-4	5322.644	769.258
275			5	-.009	.091	-.652	-4.573e-4	NC	NC
276	4	M7	1	0	0	0	-7.347e-3	NC	NC
277			2	0	.028	-.113	-7.347e-3	4570.47	5310.152
278			3	-.001	.064	-.215	-7.347e-3	2000.596	3427.181
279			4	-.002	.116	-.298	-7.347e-3	1104.459	4142.289
280			5	-.003	.192	-.356	-7.644e-3	667.779	NC
281	4	M8	1	0	0	0	-8.06e-4	NC	NC
282			2	0	-.006	-.139	-8.06e-4	NC	2322.699
283			3	-.002	0	-.256	-8.06e-4	NC	1458.366
284			4	-.003	.028	-.327	-8.06e-4	4509.137	1694.518
285			5	-.004	.092	-.335	-8.22e-4	1397.953	NC
286	4	M9	1	-.091	-.217	-.75	3.11e-4	2701.102	NC
287			2	-.091	-.03	-.584	9.758e-4	NC	9260.958
288			3	-.091	-.034	-.655	1.289e-3	NC	5148.18
289			4	-.091	-.18	-.544	9.656e-4	3258.328	5511.305
290			5	-.092	-.004	-.335	3.23e-4	NC	NC
291	4	M10	1	-.191	-.242	-.75	3.563e-5	2406.079	NC
292			2	-.191	-.02	-1	-3.368e-3	NC	1651.627
293			3	-.191	-.032	-1.007	-3.834e-3	NC	1267.343
294			4	-.191	-.181	-1.379	-3.041e-3	3236.617	622.899
295			5	-.192	-.003	-.356	-1.619e-3	NC	NC
296	4	M11	1	.75	-.242	-.191	-2.969e-3	NC	1444.195
297			2	.75	-.24	-.156	-2.241e-3	NC	2221.24
298			3	.75	-.236	-.127	-1.514e-3	NC	4021.453
299			4	.75	-.228	-.111	-2.102e-3	NC	7160.899
300			5	.75	-.217	-.091	-2.691e-3	NC	NC
301	4	M12	1	.339	-.002	-.165	-2.532e-3	NC	1475.867

Member Section Deflections (Continued)

	LC	Member Label	Sec	x [in]	y [in]	z [in]	x Rotate[rad]	(n) L/y Ratio	(n) L/z Ratio
302			2	.339	-.048	-.049	-2.451e-3	3196.364	7714.571
303			3	.339	-.06	-.077	-2.37e-3	2537.95	NC
304			4	.339	-.032	-.085	-2.289e-3	4976.523	8025.823
305			5	.339	-.003	-.067	-2.209e-3	NC	NC
306	4	M13	1	.667	-.006	-.192	-6.388e-5	NC	1467.773
307			2	.667	-.126	-.168	-3.006e-6	1210.225	1944.164
308			3	.666	-.165	-.136	5.786e-5	912.262	3449.581
309			4	.666	-.095	-.112	1.187e-4	1661.374	8049.276
310			5	.666	-.009	-.094	1.796e-4	NC	NC
311	4	M14	1	.607	-.005	-.181	-1.005e-3	NC	1497.463
312			2	.607	-.099	-.186	-9.048e-4	1551.926	1426.403
313			3	.607	-.126	-.128	-8.049e-4	1198.741	3311.081
314			4	.606	-.07	-.102	-7.051e-4	2261.849	8703.712
315			5	.606	-.007	-.085	-6.053e-4	NC	NC
316	4	M15	1	-.127	-.236	-.75	1.742e-4	NC	NC
317			2	-.127	-.173	-.574	4.92e-4	NC	8000.729
318			3	-.126	-.177	-.669	5.256e-4	NC	4569.226
319			4	-.126	-.374	-.504	4.285e-4	2133.105	8959.217
320			5	-.126	-.06	-.336	2.66e-4	NC	NC
321	4	M18	1	.236	.127	.75	8.125e-4	NC	NC
322			2	.236	.123	.75	8.125e-4	NC	NC
323			3	.236	.119	.751	8.125e-4	NC	NC
324			4	.236	.115	.751	8.125e-4	NC	NC
325			5	.236	.112	.752	8.125e-4	NC	NC
326	4	M19	1	.126	.127	.602	1.287e-3	NC	NC
327			2	.126	.127	.603	1.287e-3	NC	NC
328			3	.126	.128	.604	1.287e-3	NC	NC
329			4	.126	.128	.605	1.287e-3	NC	NC
330			5	.126	.128	.607	1.287e-3	NC	NC
331	4	M20	1	.165	.126	.661	7.897e-4	NC	NC
332			2	.165	.129	.662	7.897e-4	NC	NC
333			3	.165	.131	.664	7.897e-4	NC	NC
334			4	.165	.134	.665	7.897e-4	NC	NC
335			5	.165	.136	.666	7.897e-4	NC	NC
336	4	M21	1	.06	.126	.336	-6.678e-4	NC	NC
337			2	.06	.113	.337	-6.678e-4	NC	NC
338			3	.06	.101	.338	-6.678e-4	NC	NC
339			4	.06	.089	.338	-6.678e-4	NC	NC
340			5	.06	.077	.339	-6.678e-4	NC	NC
341	5	M3	1	0	0	0	-6.574e-5	NC	NC
342			2	-.002	-.032	.028	-6.574e-5	8575.841	3907.557
343			3	-.003	-.058	.043	-6.574e-5	5604.454	2453.554
344			4	-.005	-.071	.031	-6.574e-5	6814.923	2851.254
345			5	-.007	-.07	-.019	-3.318e-5	NC	NC
346	5	M4	1	0	0	0	6.574e-5	NC	NC
347			2	-.002	-.032	-.028	6.574e-5	8575.841	3907.557
348			3	-.003	-.058	-.043	6.574e-5	5604.454	2453.554
349			4	-.005	-.071	-.031	6.574e-5	6814.923	2851.254
350			5	-.007	-.07	.019	3.318e-5	NC	NC
351	5	M5	1	0	0	0	-3.549e-4	NC	NC
352			2	-.002	-.017	.037	-3.549e-4	7669.609	2918.757
353			3	-.004	-.034	.057	-3.549e-4	3804.559	1832.555
354			4	-.006	-.051	.041	-3.549e-4	2503.465	2129.039
355			5	-.008	-.069	-.026	-3.354e-4	1844.222	NC
356	5	M6	1	0	0	0	3.549e-4	NC	NC
357			2	-.002	-.017	-.037	3.549e-4	7669.609	2918.757
358			3	-.004	-.034	-.057	3.549e-4	3804.559	1832.555

Member Section Deflections (Continued)

	LC	Member Label	Sec	x [in]	y [in]	z [in]	x Rotate[rad]	(n) L/y Ratio	(n) L/z Ratio
359			4	-.006	-.051	-.041	3.549e-4	2503.465	2129.039
360			5	-.008	-.069	.026	3.354e-4	1844.222	NC
361	5	M7	1	0	0	0	-1.024e-3	NC	NC
362			2	0	-.059	.014	-1.024e-3	3092.859	8011.096
363			3	-.002	-.101	.021	-1.024e-3	1933.049	5029.985
364			4	-.002	-.11	.015	-1.024e-3	2209.212	5844.54
365			5	-.003	-.069	-.009	-1.006e-3	NC	NC
366	5	M8	1	0	0	0	1.024e-3	NC	NC
367			2	0	-.059	-.014	1.024e-3	3092.859	8011.096
368			3	-.002	-.101	-.021	1.024e-3	1933.049	5029.985
369			4	-.002	-.11	-.015	1.024e-3	2209.212	5844.54
370			5	-.003	-.069	.009	1.006e-3	NC	NC
371	5	M9	1	.07	-.193	0	1.808e-4	3037.694	NC
372			2	.07	-.037	.021	2.027e-3	NC	NC
373			3	.07	-.031	.035	2.415e-3	NC	NC
374			4	.069	-.175	.032	1.897e-3	3348.48	NC
375			5	.069	-.003	.009	9.266e-4	NC	NC
376	5	M10	1	.07	-.193	0	-1.808e-4	3037.694	NC
377			2	.07	-.037	-.021	-2.027e-3	NC	NC
378			3	.07	-.031	-.035	-2.415e-3	NC	NC
379			4	.069	-.175	-.032	-1.897e-3	3348.48	NC
380			5	.069	-.003	-.009	-9.266e-4	NC	NC
381	5	M11	1	0	-.193	.07	-2.475e-3	NC	NC
382			2	0	-.199	.1	-1.817e-3	NC	4870.216
383			3	0	-.202	.106	-1.159e-3	NC	3958.96
384			4	0	-.199	.1	-1.817e-3	NC	4870.216
385			5	0	-.193	.07	-2.475e-3	NC	NC
386	5	M12	1	0	-.003	.088	-1.609e-3	NC	NC
387			2	0	-.039	.13	-1.609e-3	3958.762	3463.168
388			3	0	-.059	.153	-1.609e-3	2572.907	2224.705
389			4	0	-.039	.13	-1.609e-3	3958.762	3463.168
390			5	0	-.003	.088	-1.609e-3	NC	NC
391	5	M13	1	0	-.007	.064	5.767e-4	NC	NC
392			2	0	-.107	.083	5.767e-4	1441.037	7238.046
393			3	0	-.161	.097	5.767e-4	935.202	4311.272
394			4	0	-.107	.083	5.767e-4	1441.037	7238.046
395			5	0	-.007	.064	5.767e-4	NC	NC
396	5	M14	1	0	-.006	.072	-1.323e-4	NC	NC
397			2	0	-.081	.088	-1.323e-4	1926.043	9127.613
398			3	0	-.121	.102	-1.323e-4	1249.697	4741.629
399			4	0	-.081	.088	-1.323e-4	1926.043	9127.613
400			5	0	-.006	.072	-1.323e-4	NC	NC
401	5	M15	1	.106	-.202	0	0	NC	NC
402			2	.106	-.175	0	0	NC	NC
403			3	.106	-.177	0	0	NC	NC
404			4	.106	-.364	0	0	2140.65	NC
405			5	.106	-.059	0	0	NC	NC
406	5	M18	1	.202	-.106	0	0	NC	NC
407			2	.202	-.109	0	0	NC	NC
408			3	.202	-.112	0	0	NC	NC
409			4	.202	-.115	0	0	NC	NC
410			5	.202	-.118	0	0	NC	NC
411	5	M19	1	.121	-.106	0	0	NC	NC
412			2	.121	-.105	0	0	NC	NC
413			3	.121	-.104	0	0	NC	NC
414			4	.121	-.103	0	0	NC	NC
415			5	.121	-.102	0	0	NC	NC

Member Section Deflections (Continued)

	LC	Member Label	Sec	x [in]	y [in]	z [in]	x Rotate[rad]	(n) L/y Ratio	(n) L/z Ratio
416	5	M20	1	.161	-.106	0	0	NC	NC
417			2	.161	-.104	0	0	NC	NC
418			3	.161	-.101	0	0	NC	NC
419			4	.161	-.099	0	0	NC	NC
420			5	.161	-.097	0	0	NC	NC
421	5	M21	1	.059	-.106	0	0	NC	NC
422			2	.059	-.117	0	0	NC	NC
423			3	.059	-.129	0	0	NC	NC
424			4	.059	-.141	0	0	NC	NC
425			5	.059	-.153	0	0	NC	NC
426	6	M3	1	0	0	0	1.887e-3	NC	NC
427			2	0	-.004	-.209	1.887e-3	NC	1659.909
428			3	.002	-.007	-.386	1.887e-3	NC	1051.396
429			4	.003	-.009	-.499	1.887e-3	NC	1237.428
430			5	.004	-.008	-.528	2.038e-3	NC	NC
431	6	M4	1	0	0	0	-3.476e-4	NC	NC
432			2	0	-.032	-.18	-3.476e-4	NC	2891.687
433			3	.001	-.06	-.343	-3.476e-4	NC	1815.699
434			4	.002	-.083	-.469	-3.476e-4	NC	2110.045
435			5	.002	-.095	-.545	-3.8e-4	NC	NC
436	6	M5	1	0	0	0	-4.204e-4	NC	NC
437			2	.001	-.006	-.23	-4.204e-4	NC	1456.138
438			3	.002	-.011	-.422	-4.204e-4	NC	921.463
439			4	.004	-.012	-.543	-4.204e-4	NC	1083.349
440			5	.005	-.008	-.567	-3.877e-4	NC	NC
441	6	M6	1	0	0	0	-1.633e-4	NC	NC
442			2	0	-.037	-.19	-1.633e-4	9728.765	3009.338
443			3	.001	-.069	-.363	-1.633e-4	6080.548	1889.43
444			4	.002	-.09	-.501	-1.633e-4	6949.358	2195.129
445			5	.003	-.095	-.591	-1.672e-4	NC	NC
446	6	M7	1	0	0	0	-6.596e-3	NC	NC
447			2	0	.016	-.125	-6.596e-3	7156.358	2835.59
448			3	0	.025	-.23	-6.596e-3	4472.304	1806.572
449			4	.001	.019	-.298	-6.596e-3	5109.399	2142.679
450			5	.002	-.008	-.318	-6.896e-3	NC	NC
451	6	M8	1	0	0	0	-1.237e-3	NC	NC
452			2	0	-.014	-.11	-1.237e-3	9314.175	4454.213
453			3	0	-.032	-.209	-1.237e-3	4062.22	2796.701
454			4	0	-.057	-.284	-1.237e-3	2232.816	3249.607
455			5	0	-.095	-.326	-1.242e-3	1344.252	NC
456	6	M9	1	.095	.084	-.662	1.382e-4	6935.722	NC
457			2	.095	.016	-.539	-1.982e-3	NC	NC
458			3	.095	.018	-.588	-2.251e-3	NC	6109.634
459			4	.095	.087	-.52	-1.808e-3	6692.891	5213.262
460			5	.095	0	-.326	-1.009e-3	NC	NC
461	6	M10	1	.008	.062	-.662	1.674e-4	9609.168	NC
462			2	.008	.024	-.877	-9.974e-5	NC	1911.594
463			3	.008	.019	-.87	5.586e-5	NC	1514.948
464			4	.008	.087	-1.254	-1.558e-5	6764.847	677.241
465			5	.008	.002	-.318	-2.006e-4	NC	NC
466	6	M11	1	.662	.062	.008	7.847e-4	NC	NC
467			2	.662	.068	.044	5.283e-4	NC	NC
468			3	.662	.074	.07	2.72e-4	NC	8070.642
469			4	.662	.079	.082	6.512e-4	NC	NC
470			5	.662	.084	.095	1.03e-3	NC	NC
471	6	M12	1	.316	.002	-.003	9.887e-4	NC	NC
472			2	.316	.011	.087	1.058e-3	NC	2075.159

Member Section Deflections (Continued)

	LC	Member Label	Sec	x [in]	y [in]	z [in]	x Rotate[rad]	(n) L/y Ratio	(n) L/z Ratio
473			3	.316	.028	.045	1.127e-3	5390.202	NC
474			4	.316	.026	.046	1.197e-3	5849.716	9671.968
475			5	.316	0	.082	1.266e-3	NC	NC
476	6	M13	1	.568	.005	.01	-1.546e-4	NC	NC
477			2	.568	.041	.04	-1.008e-4	3850.706	NC
478			3	.567	.083	.074	-4.705e-5	1804.619	6699.342
479			4	.567	.068	.09	6.704e-6	2213.401	9257.888
480			5	.567	.003	.095	6.046e-5	NC	NC
481	6	M14	1	.526	.004	.009	-1.965e-5	NC	NC
482			2	.526	.027	.013	6.793e-5	6059.302	8846.58
483			3	.526	.06	.074	1.555e-4	2536.849	6194.839
484			4	.526	.052	.091	2.431e-4	2932.763	7417.015
485			5	.526	.002	.093	3.307e-4	NC	NC
486	6	M15	1	.07	.074	-.662	1.536e-4	NC	NC
487			2	.07	.097	-.494	4.261e-4	NC	7136.466
488			3	.07	.097	-.571	4.51e-4	NC	6940.679
489			4	.07	.193	-.433	3.748e-4	3753.622	NC
490			5	.071	.028	-.313	2.48e-4	NC	NC
491	6	M18	1	-.074	-.07	.662	7.224e-4	NC	NC
492			2	-.074	-.069	.662	7.224e-4	NC	NC
493			3	-.074	-.068	.663	7.224e-4	NC	NC
494			4	-.074	-.068	.663	7.224e-4	NC	NC
495			5	-.074	-.067	.664	7.224e-4	NC	NC
496	6	M19	1	-.06	-.07	.522	1.213e-3	NC	NC
497			2	-.06	-.071	.523	1.213e-3	NC	NC
498			3	-.06	-.072	.524	1.213e-3	NC	NC
499			4	-.06	-.073	.525	1.213e-3	NC	NC
500			5	-.06	-.074	.526	1.213e-3	NC	NC
501	6	M20	1	-.083	-.07	.563	6.974e-4	NC	NC
502			2	-.083	-.071	.564	6.974e-4	NC	NC
503			3	-.083	-.072	.565	6.974e-4	NC	NC
504			4	-.083	-.073	.566	6.974e-4	NC	NC
505			5	-.083	-.074	.567	6.974e-4	NC	NC
506	6	M21	1	-.028	-.071	.313	-7.657e-4	NC	NC
507			2	-.028	-.064	.314	-7.657e-4	NC	NC
508			3	-.028	-.058	.314	-7.657e-4	NC	NC
509			4	-.028	-.052	.315	-7.657e-4	NC	NC
510			5	-.028	-.045	.316	-7.657e-4	NC	NC
511	7	M3	1	0	0	0	-3.856e-4	NC	NC
512			2	0	-.081	-.015	-3.856e-4	5612.072	7385.052
513			3	.002	-.151	-.023	-3.856e-4	3610.673	4636.523
514			4	.002	-.204	-.016	-3.856e-4	4292.885	5385.737
515			5	.003	-.232	.01	-3.494e-4	NC	NC
516	7	M4	1	0	0	0	3.856e-4	NC	NC
517			2	0	-.081	.015	3.856e-4	5612.072	7385.052
518			3	.002	-.151	.023	3.856e-4	3610.673	4636.523
519			4	.002	-.204	.016	3.856e-4	4292.885	5385.737
520			5	.003	-.232	-.01	3.494e-4	NC	NC
521	7	M5	1	0	0	0	-5.453e-4	NC	NC
522			2	0	-.085	-.02	-5.453e-4	4721.684	5416.122
523			3	.002	-.159	-.031	-5.453e-4	2951.073	3400.694
524			4	.003	-.212	-.022	-5.453e-4	3372.678	3951.548
525			5	.004	-.231	.014	-5.201e-4	NC	NC
526	7	M6	1	0	0	0	5.453e-4	NC	NC
527			2	0	-.085	.02	5.453e-4	4721.684	5416.122
528			3	.002	-.159	.031	5.453e-4	2951.073	3400.694
529			4	.003	-.212	.022	5.453e-4	3372.678	3951.548

Member Section Deflections (Continued)

	LC	Member Label	Sec	x [in]	y [in]	z [in]	x Rotate[rad]	(n) L/y Ratio	(n) L/z Ratio
530			5	.004	-.231	-.014	5.201e-4	NC	NC
531	7	M7	1	0	0	0	-4.229e-4	NC	NC
532			2	0	-.059	-.007	-4.229e-4	NC	NC
533			3	0	-.117	-.01	-4.229e-4	NC	NC
534			4	0	-.175	-.007	-4.229e-4	NC	NC
535			5	.001	-.232	.005	-4.103e-4	NC	NC
536	7	M8	1	0	0	0	4.229e-4	NC	NC
537			2	0	-.059	.007	4.229e-4	NC	NC
538			3	0	-.117	.01	4.229e-4	NC	NC
539			4	0	-.175	.007	4.229e-4	NC	NC
540			5	.001	-.232	-.005	4.103e-4	NC	NC
541	7	M9	1	.232	.104	0	2.195e-5	5614.196	NC
542			2	.232	.01	-.017	-1.079e-3	NC	NC
543			3	.232	.021	0	-1.297e-3	NC	NC
544			4	.231	.091	-.019	-1.001e-3	6406.707	NC
545			5	.232	.001	-.005	-4.476e-4	NC	NC
546	7	M10	1	.232	.104	0	-2.195e-5	5614.196	NC
547			2	.232	.01	.017	1.079e-3	NC	NC
548			3	.232	.021	0	1.297e-3	NC	NC
549			4	.231	.091	.019	1.001e-3	6406.707	NC
550			5	.232	.001	.005	4.476e-4	NC	NC
551	7	M11	1	0	.104	.232	1.209e-3	NC	NC
552			2	0	.103	.265	8.896e-4	NC	4338.099
553			3	0	.103	.272	5.703e-4	NC	3561.507
554			4	0	.103	.265	8.896e-4	NC	4338.099
555			5	0	.104	.232	1.209e-3	NC	NC
556	7	M12	1	0	.001	.214	1.773e-3	NC	NC
557			2	0	.019	.233	1.773e-3	8142.29	7482.603
558			3	0	.029	.245	1.773e-3	5250.369	4663.68
559			4	0	.019	.233	1.773e-3	8142.29	7482.603
560			5	0	.001	.214	1.773e-3	NC	NC
561	7	M13	1	0	.004	.229	4.011e-4	NC	NC
562			2	0	.058	.258	4.011e-4	2662.299	5044.042
563			3	0	.087	.277	4.011e-4	1722.351	3045.574
564			4	0	.058	.258	4.011e-4	2662.299	5044.042
565			5	0	.004	.229	4.011e-4	NC	NC
566	7	M14	1	0	.003	.226	7.231e-4	NC	NC
567			2	0	.042	.254	7.231e-4	3636.772	5169.412
568			3	0	.064	.276	7.231e-4	2352.835	2952.51
569			4	0	.042	.254	7.231e-4	3636.772	5169.412
570			5	0	.003	.226	7.231e-4	NC	NC
571	7	M15	1	.272	.103	0	0	NC	NC
572			2	.272	.096	0	0	NC	NC
573			3	.272	.097	0	0	NC	NC
574			4	.272	.202	0	0	3709.704	NC
575			5	.272	.029	0	0	NC	NC
576	7	M18	1	-.103	-.272	0	0	NC	NC
577			2	-.103	-.271	0	0	NC	NC
578			3	-.103	-.269	0	0	NC	NC
579			4	-.103	-.268	0	0	NC	NC
580			5	-.103	-.267	0	0	NC	NC
581	7	M19	1	-.064	-.272	0	0	NC	NC
582			2	-.064	-.273	0	0	NC	NC
583			3	-.064	-.273	0	0	NC	NC
584			4	-.064	-.274	0	0	NC	NC
585			5	-.064	-.275	0	0	NC	NC
586	7	M20	1	-.087	-.272	0	0	NC	NC

Member Section Deflections (Continued)

	LC	Member Label	Sec	x [in]	y [in]	z [in]	x Rotate[rad]	(n) L/y Ratio	(n) L/z Ratio
587			2	-.087	-.273	0	0	NC	NC
588			3	-.087	-.274	0	0	NC	NC
589			4	-.087	-.275	0	0	NC	NC
590			5	-.087	-.277	0	0	NC	NC
591	7	M21	1	-.029	-.272	0	0	NC	NC
592			2	-.029	-.265	0	0	NC	NC
593			3	-.029	-.258	0	0	NC	NC
594			4	-.029	-.251	0	0	NC	NC
595			5	-.029	-.245	0	0	NC	NC

Envelope Member Section Forces

	Member	Sec		Axial[k]	LC	y Shear[k]	LC	z Shear[k]	LC	Torque[k...	LC	y-y Mom...	LC	z-z Mom...	LC
1	M3	1	max	10.132	1	.232	7	.683	6	0	1	0	1	0	1
2			min	-3.638	6	-.111	1	-.376	3	0	1	0	1	0	1
3		2	max	10.075	1	.187	7	.639	6	0	1	1.763	6	.295	1
4			min	-3.681	6	-.111	1	-.376	3	0	1	-1.003	3	-.559	7
5		3	max	10.017	1	.141	7	.594	6	0	1	3.407	6	.59	1
6			min	-3.723	6	-.111	1	-.376	3	0	1	-2.006	3	-.997	7
7		4	max	9.96	1	.096	7	.549	6	0	1	4.931	6	.885	1
8			min	-3.766	6	-.111	1	-.376	3	0	1	-3.009	3	-1.313	7
9		5	max	6.993	1	0	7	.848	2	-.135	3	.008	2	1.215	1
10			min	-2.033	7	-.228	2	-.025	7	-.641	6	-.002	7	-1.466	7
11	M4	1	max	11.15	1	.232	7	.985	2	0	1	0	1	0	1
12			min	-2.902	7	-.079	1	-.143	7	0	1	0	1	0	1
13		2	max	11.093	1	.187	7	.985	2	0	1	2.628	2	.211	1
14			min	-2.945	7	-.079	1	-.143	7	0	1	-.381	7	-.559	7
15		3	max	11.036	1	.141	7	.985	2	0	1	5.257	2	.423	1
16			min	-2.988	7	-.079	1	-.143	7	0	1	-.762	7	-.997	7
17		4	max	10.979	1	.096	7	.985	2	0	1	7.885	2	.634	1
18			min	-3.031	7	-.079	1	-.143	7	0	1	-1.143	7	-1.313	7
19		5	max	6.962	1	.003	6	.05	4	.153	7	.004	6	.844	1
20			min	-2.033	7	-.083	3	.005	1	.041	1	-.005	3	-1.466	7
21	M5	1	max	12.138	1	.219	7	.773	6	0	1	0	1	0	1
22			min	-4.612	6	-.334	1	-.5	3	0	1	0	1	0	1
23		2	max	12.081	1	.219	7	.726	6	0	1	2.002	6	.891	1
24			min	-4.655	6	-.334	1	-.5	3	0	1	-1.334	3	-.585	7
25		3	max	12.024	1	.219	7	.683	6	0	1	3.884	6	1.783	1
26			min	-4.698	6	-.334	1	-.5	3	0	1	-2.668	3	-1.171	7
27		4	max	11.967	1	.219	7	.638	6	0	1	5.646	6	2.674	1
28			min	-4.741	6	-.334	1	-.5	3	0	1	-4.003	3	-1.756	7
29		5	max	8.006	1	.184	7	1.091	2	-.033	1	.004	1	3.527	1
30			min	-2.429	7	-.288	2	.006	7	-.138	6	-.001	7	-2.311	7
31	M6	1	max	13.303	1	.219	7	1.169	2	0	1	0	1	0	1
32			min	-3.697	7	-.29	1	-.195	7	0	1	0	1	0	1
33		2	max	13.246	1	.219	7	1.169	2	0	1	3.117	2	.773	1
34			min	-3.739	7	-.29	1	-.195	7	0	1	-.52	7	-.585	7
35		3	max	13.189	1	.219	7	1.169	2	0	1	6.234	2	1.547	1
36			min	-3.782	7	-.29	1	-.195	7	0	1	-1.039	7	-1.171	7
37		4	max	13.132	1	.219	7	1.169	2	0	1	9.351	2	2.32	1
38			min	-3.825	7	-.29	1	-.195	7	0	1	-1.559	7	-1.756	7
39		5	max	8.011	1	.184	7	-.006	7	.106	7	.002	6	3.051	1
40			min	-2.429	7	-.239	1	-.057	1	-.02	1	-.003	1	-2.311	7
41	M7	1	max	4.702	1	.413	3	.419	6	0	1	0	1	0	1
42			min	-1.741	6	-.145	6	-.182	3	0	1	0	1	0	1
43		2	max	4.645	1	.413	3	.374	6	0	1	1.059	6	.386	6
44			min	-1.784	6	-.145	6	-.182	3	0	1	-.486	3	-1.101	3
45		3	max	4.588	1	.413	3	.33	6	0	1	1.998	6	.772	6
46			min	-1.827	6	-.145	6	-.182	3	0	1	-.972	3	-2.202	3
47		4	max	4.531	1	.413	3	.285	6	0	1	2.817	6	1.158	6
48			min	-1.87	6	-.145	6	-.182	3	0	1	-1.458	3	-3.303	3
49		5	max	3.103	1	.481	2	.48	2	1.262	6	0	7	1.318	6
50			min	-.952	6	-.02	7	-.005	7	-.084	3	-.003	1	-4.349	3
51	M8	1	max	5.287	1	.413	3	.511	2	0	1	0	1	0	1
52			min	-1.111	7	-.081	6	-.064	7	0	1	0	1	0	1
53		2	max	5.23	1	.413	3	.511	2	0	1	1.364	2	.217	6
54			min	-1.153	7	-.081	6	-.064	7	0	1	-.169	7	-1.101	3
55		3	max	5.173	1	.413	3	.511	2	0	1	2.727	2	.435	6
56			min	-1.196	7	-.081	6	-.064	7	0	1	-.339	7	-2.202	3

COLUMNS M3 THRU M8

Envelope Member Section Forces (Continued)

	Member	Sec		Axial[k]	LC	y Shear[k]	LC	z Shear[k]	LC	Torque[k...	LC	y-y Mom...	LC	z-z Mom...	LC
57		4	max	5.116	1	.413	3	.511	2	0	1	4.091	2	.652	6
58			min	-1.239	7	-.081	6	-.064	7	0	1	-.508	7	-3.303	3
59		5	max	3.128	1	.346	3	.006	4	.084	3	.002	1	.843	6
60			min	-.91	6	-.05	6	-.002	1	.024	6	-.001	6	-4.349	3
61	M9	1	max	.173	3	-.02	6	-.027	1	.004	6	.182	3	.003	6
62			min	.03	1	-.177	3	-.048	2	-.005	3	.106	1	-.008	1
63		2	max	.252	3	2.313	1	.01	2	0	6	.024	7	1.869	1
64			min	.046	6	-.741	7	-.005	7	0	1	-.066	2	-.841	7
65		3	max	.252	3	.653	6	.01	2	0	6	.055	2	1.297	3
66			min	.046	6	-2.171	1	-.005	7	0	1	-.031	7	-.258	6
67		4	max	.359	3	1.356	1	-.004	6	.002	1	.028	6	2.067	6
68			min	-.048	6	-.501	7	-.008	2	-.001	6	-.002	3	-7.067	1
69		5	max	.359	3	.91	6	-.004	6	.002	1	-.024	6	4.349	3
70			min	-.048	6	-3.128	1	-.008	2	-.001	6	-.084	3	-.843	6
71	M10	1	max	.173	3	-.019	6	.082	2	.009	2	.077	6	.003	7
72			min	-.015	6	-.177	3	.033	7	-.002	7	-.182	3	-.009	1
73		2	max	.252	3	2.344	1	.293	6	0	1	.031	2	2.111	1
74			min	.121	6	-.741	7	.002	3	0	7	-.024	7	-.841	7
75		3	max	.252	3	.705	6	.005	7	0	1	.031	7	1.297	3
76			min	.121	6	-2.14	1	-.308	2	0	7	-.067	4	-.478	6
77		4	max	.497	2	1.382	1	.129	6	0	7	.817	2	2.097	6
78			min	-.017	7	-.501	7	.006	7	-.003	1	-.013	7	-7.051	1
79		5	max	.497	2	.952	6	.007	3	0	7	.084	3	4.349	3
80			min	-.017	7	-3.103	1	-.473	2	-.003	1	-1.262	6	-1.318	6
81	M11	1	max	.082	2	.176	3	.015	6	.003	7	.182	3	.002	7
82			min	.033	7	.019	6	-.173	3	-.009	1	-.077	6	-.009	2
83		2	max	.082	2	.121	3	.015	6	.003	7	-.002	1	.004	6
84			min	.033	7	-.022	6	-.023	3	-.009	1	-.125	7	-.45	3
85		3	max	.082	2	.063	6	.132	7	.007	3	.046	7	.133	6
86			min	.033	7	-.066	3	-.128	5	-.009	1	-.145	2	-.731	3
87		4	max	.048	2	.022	6	.054	2	.008	1	.017	2	.007	6
88			min	.027	1	-.121	3	.018	7	-.003	6	-.125	7	-.45	3
89		5	max	.048	2	-.02	6	.173	3	.008	1	.182	3	.004	6
90			min	.027	1	-.176	3	.03	1	-.003	6	.106	1	-.005	3
91	M12	1	max	.466	2	1.405	3	.271	6	0	3	.084	3	1.79	3
92			min	-.069	7	-.961	6	-.052	3	0	2	-1.262	6	-3.71	6
93		2	max	.466	2	1.35	3	.271	6	0	3	-.026	7	.787	7
94			min	-.069	7	-1.002	6	-.052	3	0	2	-.498	2	-4.041	2
95		3	max	.481	2	.531	7	.271	6	0	3	.365	6	2.318	7
96			min	-.069	7	-1.841	2	-.007	4	0	2	-.225	3	-7.503	1
97		4	max	.481	2	.49	7	.052	3	0	3	.122	6	2.25	6
98			min	-.069	7	-1.896	2	-.033	6	0	2	-.071	3	-2.344	3
99		5	max	.481	2	.448	7	.052	3	0	3	.084	3	5.029	2
100			min	-.069	7	-1.951	2	-.033	6	0	2	.024	6	-.62	7
101	M13	1	max	1.105	2	3.909	1	-.003	1	0	3	.138	6	4.885	3
102			min	-.194	7	-2.362	6	-.047	7	0	2	.033	1	-7.66	6
103		2	max	1.105	2	3.854	1	-.003	1	0	3	.031	2	2.456	7
104			min	-.194	7	-2.403	6	-.047	7	0	2	-.033	7	-9.972	2
105		3	max	1.105	2	1.521	7	.047	7	0	3	.018	1	6.958	7
106			min	-.194	7	-4.959	1	-.04	6	0	2	-.173	7	-20.911	1
107		4	max	1.075	2	1.48	7	.047	7	0	3	0	1	5.042	6
108			min	-.194	7	-5.014	1	-.006	1	0	2	-.033	7	-6.387	3
109		5	max	1.075	2	1.439	7	.047	7	0	3	.106	7	11.457	2
110			min	-.194	7	-5.069	1	-.006	1	0	2	-.02	1	-1.922	7
111	M14	1	max	.794	2	2.913	1	-.045	3	0	3	.641	6	3.711	3
112			min	-.171	7	-1.866	6	-.151	6	0	2	.135	3	-6.596	6
113		2	max	.794	2	2.858	1	-.045	3	0	3	.216	2	1.796	7

OUTSIDE PURLIN

OUTSIDE PURLIN

BEAMS

COLUMN

Envelope Member Section Forces (Continued)

INSIDE PURLIN

	Member	Sec		Axial[k]	LC	y Shear[k]	LC	z Shear[k]	LC	Torque[k...	LC	y-y Mom...	LC	z-z Mom...	LC
114			min	-.171	7	-1.907	6	-.151	6	0	2	-.024	7	-8.059	2
115		3	max	.842	2	2.757	3	.048	4	0	3	-.072	1	5.1	7
116			min	-.171	7	-3.852	1	-.151	6	0	2	-.263	6	-15.931	1
117		4	max	.842	2	1.081	7	.063	6	0	3	0	3	4.15	6
118			min	-.171	7	-3.907	1	.015	1	0	2	-.053	6	-4.808	3
119		5	max	.842	2	1.04	7	.063	6	0	3	.153	7	9.727	2
120			min	-.171	7	-3.962	1	.015	1	0	2	.041	1	-1.385	7
121	M15	1	max	.264	7	.132	3	0	3	0	3	.157	6	.017	1
122			min	-.045	2	-.126	6	-.034	6	0	2	0	3	-.005	7
123		2	max	.165	3	2.112	1	.015	2	0	3	0	3	.424	6
124			min	-.247	6	-.719	7	0	3	0	2	-.097	2	-.323	3
125		3	max	.165	3	.904	6	.015	2	0	3	.079	2	2.468	1
126			min	-.247	6	-2.536	1	0	3	0	2	0	3	-.816	7
127		4	max	.102	3	1.565	1	0	3	0	2	.003	2	3.132	7
128			min	-.304	6	-.546	7	-.015	2	0	3	-.003	6	-9.221	1
129		5	max	.102	3	1.077	6	0	3	0	2	0	3	.066	5
130			min	-.304	6	-3.082	1	-.015	2	0	3	-.176	2	-.258	6
131	M18	1	max	0	1	0	1	0	6	0	1	0	3	0	1
132			min	0	1	0	4	0	2	0	1	0	6	0	6
133		2	max	0	1	0	1	0	6	0	1	0	3	0	1
134			min	0	1	0	4	0	2	0	1	0	2	0	6
135		3	max	0	1	0	1	0	6	0	1	0	3	0	1
136			min	0	1	0	4	0	2	0	1	0	2	0	6
137		4	max	0	1	0	1	0	6	0	1	0	3	0	1
138			min	0	1	0	4	0	2	0	1	0	2	0	2
139		5	max	0	1	0	1	0	6	0	1	0	3	0	1
140			min	0	1	0	4	0	2	0	1	0	2	0	2
141	M19	1	max	6.65	1	-.083	1	.048	6	0	3	0	2	-.069	1
142			min	-2.245	7	-.215	6	0	3	-.042	2	0	3	-.18	6
143		2	max	6.65	1	-.083	1	.048	6	0	3	.011	6	-.052	1
144			min	-2.245	7	-.215	6	0	3	-.042	2	0	3	-.135	6
145		3	max	6.65	1	-.083	1	.048	6	0	3	.021	6	-.035	1
146			min	-2.245	7	-.215	6	0	3	-.042	2	0	3	-.09	6
147		4	max	6.65	1	-.083	1	.048	6	0	3	.03	6	-.017	1
148			min	-2.245	7	-.215	6	0	3	-.042	2	0	3	-.045	6
149		5	max	6.65	1	-.083	1	.048	6	0	3	.04	6	0	6
150			min	-2.245	7	-.215	6	0	3	-.042	2	0	3	0	5
151	M20	1	max	8.748	1	-.019	1	0	3	0	3	0	2	-.016	1
152			min	-3.043	7	-.096	7	-.037	2	-.023	6	0	3	-.08	7
153		2	max	8.748	1	-.019	1	0	3	0	3	0	3	-.012	1
154			min	-3.043	7	-.096	7	-.037	2	-.023	6	-.007	2	-.06	7
155		3	max	8.748	1	-.019	1	0	3	0	3	0	3	-.008	1
156			min	-3.043	7	-.096	7	-.037	2	-.023	6	-.015	2	-.04	7
157		4	max	8.748	1	-.019	1	0	3	0	3	0	3	-.004	1
158			min	-3.043	7	-.096	7	-.037	2	-.023	6	-.023	2	-.02	7
159		5	max	8.748	1	-.019	1	0	3	0	3	0	3	0	6
160			min	-3.043	7	-.096	7	-.037	2	-.023	6	-.031	2	0	1
161	M21	1	max	3.082	1	.308	6	.014	2	.176	2	0	3	.258	6
162			min	-1.077	6	-.079	5	0	3	0	3	0	2	-.066	5
163		2	max	3.082	1	.308	6	.014	2	.176	2	.003	2	.193	6
164			min	-1.077	6	-.079	5	0	3	0	3	0	3	-.05	5
165		3	max	3.082	1	.308	6	.014	2	.176	2	.006	2	.129	6
166			min	-1.077	6	-.079	5	0	3	0	3	0	3	-.033	5
167		4	max	3.082	1	.308	6	.014	2	.176	2	.009	2	.064	6
168			min	-1.077	6	-.079	5	0	3	0	3	0	3	-.017	5
169		5	max	3.082	1	.308	6	.014	2	.176	2	.012	2	0	2
170			min	-1.077	6	-.079	5	0	3	0	3	0	3	0	7

Envelope Member Section Deflections

	Member	Sec		x [in]	LC	y [in]	LC	z [in]	LC	x Rotate [r...	LC	(n) L/y Ratio	LC	(n) L/z Ratio	LC
1	M3	1	max	0	1	0	1	0	1	2.239e-3	2	NC	1	NC	1
2			min	0	1	0	1	0	1	-3.856e-4	7	NC	1	NC	1
3		2	max	0	6	.082	1	.039	3	2.239e-3	2	9372.911	1	2806.26	3
4			min	-.003	1	-.081	7	-.209	6	-3.856e-4	7	5612.072	7	1659.909	6
5		3	max	.002	6	.159	1	.059	3	2.239e-3	2	5858.317	1	1762.009	3
6			min	-.005	1	-.151	7	-.386	6	-3.856e-4	7	3610.673	7	1051.396	6
7		4	max	.003	6	.225	1	.042	3	2.239e-3	2	6696.108	1	2047.444	3
8			min	-.008	1	-.204	7	-.538	2	-3.856e-4	7	4292.885	7	3813.195	2
9		5	max	.004	6	.275	1	.01	7	2.39e-3	2	NC	1	NC	7
10			min	-.01	1	-.232	7	-.673	2	-3.494e-4	7	NC	7	NC	2
11	M4	1	max	0	1	0	1	0	1	3.856e-4	7	NC	1	NC	1
12			min	0	1	0	1	0	1	-7.993e-4	2	NC	1	NC	1
13		2	max	0	7	.065	1	.015	7	3.856e-4	7	NC	1	7385.052	7
14			min	-.003	1	-.081	7	-.274	2	-7.993e-4	2	5612.072	7	1070.819	2
15		3	max	.002	7	.127	1	.023	7	3.856e-4	7	8168.533	1	4636.523	7
16			min	-.006	1	-.151	7	-.498	2	-7.993e-4	2	3610.673	7	672.352	2
17		4	max	.002	7	.181	1	.016	7	3.856e-4	7	9335.698	1	5385.737	7
18			min	-.009	1	-.204	7	-.626	2	-7.993e-4	2	4292.885	7	781.273	2
19		5	max	.003	7	.222	1	.027	3	3.494e-4	7	NC	1	NC	3
20			min	-.011	1	-.232	7	-.616	2	-8.234e-4	2	NC	7	NC	2
21	M5	1	max	0	1	0	1	0	1	-4.504e-5	1	NC	1	NC	1
22			min	0	1	0	1	0	1	-5.453e-4	7	NC	1	NC	1
23		2	max	.001	6	.11	1	.052	3	-4.504e-5	1	3100.544	1	2109.024	3
24			min	-.003	1	-.085	7	-.23	6	-5.453e-4	7	4721.684	7	1456.138	6
25		3	max	.002	6	.204	1	.079	3	-4.504e-5	1	1937.857	1	1324.149	3
26			min	-.006	1	-.159	7	-.422	6	-5.453e-4	7	2951.073	7	921.463	6
27		4	max	.004	6	.264	1	.056	3	-4.504e-5	1	2214.724	1	1538.328	3
28			min	-.01	1	-.212	7	-.584	2	-5.453e-4	7	3372.678	7	5580.316	2
29		5	max	.005	6	.275	1	.014	7	-3.721e-5	1	NC	1	NC	7
30			min	-.012	1	-.231	7	-.749	2	-5.201e-4	7	NC	7	NC	2
31	M6	1	max	0	1	0	1	0	1	5.453e-4	7	NC	1	NC	1
32			min	0	1	0	1	0	1	-5.384e-4	2	NC	1	NC	1
33		2	max	0	7	.091	1	.02	7	5.453e-4	7	3573.968	1	5416.122	7
34			min	-.003	1	-.085	7	-.31	2	-5.384e-4	2	4721.684	7	902.784	2
35		3	max	.002	7	.169	1	.031	7	5.453e-4	7	2233.743	1	3400.694	7
36			min	-.007	1	-.159	7	-.563	2	-5.384e-4	2	2951.073	7	566.824	2
37		4	max	.003	7	.217	1	.022	7	5.453e-4	7	2552.856	1	3951.548	7
38			min	-.01	1	-.212	7	-.7	2	-5.384e-4	2	3372.678	7	658.558	2
39		5	max	.004	7	.223	1	.036	3	5.201e-4	7	NC	1	NC	3
40			min	-.013	1	-.231	7	-.674	2	-5.363e-4	2	NC	7	NC	2
41	M7	1	max	0	1	0	1	0	1	-4.229e-4	7	NC	1	NC	1
42			min	0	1	0	1	0	1	-7.531e-3	2	NC	1	NC	1
43		2	max	0	6	.036	2	.019	3	-4.229e-4	7	3594.845	2	5791.726	3
44			min	-.001	1	-.059	5	-.125	6	-7.531e-3	2	3092.859	5	2835.59	6
45		3	max	0	6	.083	2	.029	3	-4.229e-4	7	1548.445	2	3636.458	3
46			min	-.002	1	-.117	7	-.23	6	-7.531e-3	2	NC	7	1806.572	6
47		4	max	.001	6	.156	1	.021	3	-4.229e-4	7	822.83	1	4225.195	3
48			min	-.004	1	-.175	7	-.298	2	-7.531e-3	2	NC	7	5428.696	2
49		5	max	.002	6	.276	1	.005	7	-4.103e-4	7	463.579	1	NC	7
50			min	-.005	1	-.232	7	-.366	2	-7.829e-3	2	NC	7	NC	2
51	M8	1	max	0	1	0	1	0	1	1.162e-3	3	NC	1	NC	1
52			min	0	1	0	1	0	1	-1.237e-3	6	NC	1	NC	1
53		2	max	0	7	.014	1	.007	7	1.162e-3	3	8931.625	1	NC	7
54			min	-.001	1	-.059	5	-.147	2	-1.237e-3	6	3092.859	5	2063.787	2
55		3	max	0	7	.045	1	.01	7	1.162e-3	3	2828.553	1	NC	7
56			min	-.003	1	-.117	7	-.268	2	-1.237e-3	6	NC	7	1295.799	2

Envelope Member Section Deflections (Continued)

	Member	Sec		x [in]	LC	y [in]	LC	z [in]	LC	x Rotate [r...	LC	(n) L/y Ratio	LC	(n) L/z Ratio	LC
57		4	max	0	7	.109	1	.007	7	1.162e-3	3	1170.503	1	NC	7
58			min	-.004	1	-.175	7	-.339	2	-1.237e-3	6	NC	7	1505.615	2
59		5	max	.001	7	.223	1	.013	3	1.142e-3	3	573.422	1	NC	3
60			min	-.005	1	-.232	7	-.339	2	-1.242e-3	6	NC	7	NC	2
61	M9	1	max	.232	7	.104	7	0	3	3.682e-4	2	5614.196	7	NC	3
62			min	-.222	1	-.365	1	-.777	2	2.195e-5	7	1601.834	1	NC	2
63		2	max	.232	7	.016	6	.031	3	2.819e-3	3	NC	6	NC	3
64			min	-.223	1	-.047	3	-.601	2	-1.982e-3	6	NC	3	8584.889	2
65		3	max	.232	7	.021	7	.044	3	3.373e-3	1	NC	7	NC	3
66			min	-.223	1	-.055	1	-.678	2	-2.251e-3	6	NC	1	4817.933	2
67		4	max	.231	7	.091	7	.044	3	2.626e-3	3	6406.707	7	NC	3
68			min	-.223	1	-.296	1	-.554	2	-1.808e-3	6	1978.175	1	5448.182	2
69		5	max	.232	7	.001	7	.013	3	1.282e-3	3	NC	7	NC	3
70			min	-.223	1	-.005	1	-.339	2	-1.009e-3	6	NC	1	NC	2
71	M10	1	max	.232	7	.104	7	0	7	1.674e-4	6	5614.196	7	NC	7
72			min	-.275	1	-.378	1	-.777	2	-2.341e-4	3	1542.847	1	NC	2
73		2	max	.232	7	.024	6	.017	7	1.079e-3	7	NC	6	NC	7
74			min	-.275	1	-.047	3	-1.036	2	-4.211e-3	2	NC	3	1592.188	2
75		3	max	.232	7	.021	7	0	7	1.297e-3	7	NC	7	NC	7
76			min	-.275	1	-.054	1	-1.048	2	-4.821e-3	2	NC	1	1209.581	2
77		4	max	.231	7	.091	7	.019	7	1.001e-3	7	6406.707	7	NC	7
78			min	-.276	1	-.297	1	-1.414	2	-3.81e-3	2	1973.827	1	609.333	2
79		5	max	.232	7	.002	6	.005	7	4.476e-4	7	NC	6	NC	7
80			min	-.276	1	-.005	1	-.366	2	-1.987e-3	2	NC	1	NC	2
81	M11	1	max	.777	2	.104	7	.232	7	1.209e-3	7	NC	7	NC	7
82			min	0	7	-.378	1	-.275	1	-4.65e-3	1	NC	1	2733.477	1
83		2	max	.777	2	.103	7	.265	7	8.896e-4	7	NC	7	4338.099	7
84			min	0	7	-.382	1	-.259	1	-3.546e-3	1	NC	1	3895.529	1
85		3	max	.777	2	.103	7	.272	7	5.703e-4	7	NC	7	3561.507	7
86			min	0	3	-.382	1	-.244	1	-2.442e-3	1	NC	1	6607.149	1
87		4	max	.777	2	.103	7	.265	7	8.896e-4	7	NC	7	4338.099	7
88			min	0	3	-.375	1	-.236	1	-3.472e-3	1	NC	1	NC	1
89		5	max	.777	2	.104	7	.232	7	1.209e-3	7	NC	7	NC	7
90			min	0	3	-.365	1	-.222	1	-4.503e-3	1	NC	1	NC	1
91	M12	1	max	.346	2	.002	6	.214	7	1.773e-3	7	NC	6	NC	7
92			min	0	7	-.004	1	-.233	1	-4.068e-3	1	NC	1	2794.219	1
93		2	max	.346	2	.019	7	.233	7	1.773e-3	7	8142.29	7	7482.603	7
94			min	0	7	-.069	1	-.159	1	-4.025e-3	1	2249.181	1	6403.871	1
95		3	max	.346	2	.029	7	.245	7	1.773e-3	7	5250.369	7	4663.68	7
96			min	0	3	-.097	1	-.164	1	-3.982e-3	1	1564.503	1	8619.926	1
97		4	max	.346	2	.026	6	.233	7	1.773e-3	7	5849.716	6	7482.603	7
98			min	0	3	-.061	1	-.176	1	-3.939e-3	1	2585.54	1	NC	1
99		5	max	.346	2	.001	7	.214	7	1.773e-3	7	NC	7	NC	7
100			min	0	3	-.005	1	-.181	1	-3.896e-3	1	NC	1	NC	1
101	M13	1	max	.698	2	.005	6	.229	7	6.022e-4	3	NC	6	NC	7
102			min	0	7	-.012	1	-.278	1	-1.546e-4	6	NC	1	NC	1
103		2	max	.698	2	.058	7	.258	7	6.022e-4	3	2662.299	7	5044.042	7
104			min	0	7	-.186	1	-.272	1	-1.008e-4	6	825.349	1	NC	1
105		3	max	.697	2	.087	7	.277	7	6.022e-4	3	1722.351	7	3045.574	7
106			min	0	3	-.267	1	-.26	1	-4.705e-5	6	564.387	1	NC	1
107		4	max	.697	2	.068	6	.258	7	6.022e-4	3	2213.401	6	5044.042	7
108			min	0	3	-.17	1	-.243	1	6.704e-6	6	916.853	1	NC	1
109		5	max	.697	2	.004	7	.229	7	6.022e-4	3	NC	7	NC	7
110			min	0	3	-.013	1	-.226	1	6.046e-5	6	NC	1	NC	1
111	M14	1	max	.632	2	.004	6	.226	7	7.231e-4	7	NC	6	NC	7
112			min	0	7	-.01	1	-.262	1	-1.44e-3	1	NC	1	NC	1
113		2	max	.632	2	.042	7	.254	7	7.231e-4	7	3636.772	7	5169.412	7

Envelope Member Section Deflections (Continued)

	Member	Sec		x [in]	LC	y [in]	LC	z [in]	LC	x Rotate [r...	LC	(n) L/y Ratio	LC	(n) L/z Ratio	LC
114			min	0	7	-.144	1	-.272	1	-1.387e-3	1	1073.975	1	6190.136	1
115		3	max	.632	2	.064	7	.275	7	7.231e-4	7	2352.835	7	2952.51	7
116			min	0	3	-.205	1	-.247	1	-1.335e-3	1	740.735	1	NC	1
117		4	max	.632	2	.052	6	.254	7	7.231e-4	7	2932.763	6	5169.412	7
118			min	0	3	-.129	1	-.228	1	-1.282e-3	1	1215.159	1	NC	1
119		5	max	.632	2	.003	7	.226	7	7.231e-4	7	NC	7	NC	7
120			min	0	3	-.011	1	-.211	1	-1.229e-3	1	NC	1	NC	1
121	M15	1	max	.272	7	.103	7	0	3	1.803e-4	2	NC	7	NC	3
122			min	-.244	1	-.382	1	-.777	2	0	3	NC	1	NC	2
123		2	max	.272	7	.097	6	0	3	5.127e-4	2	NC	6	NC	3
124			min	-.244	1	-.281	1	-.6	2	0	3	NC	1	8351.548	2
125		3	max	.272	7	.097	7	0	3	5.49e-4	2	NC	7	NC	3
126			min	-.244	1	-.289	1	-.7	2	0	3	NC	1	4119.88	2
127		4	max	.272	7	.202	7	0	3	4.452e-4	2	3709.704	7	NC	3
128			min	-.244	1	-.608	1	-.526	2	0	3	1309.533	1	7743.591	2
129		5	max	.272	7	.029	7	0	3	2.713e-4	2	NC	7	NC	3
130			min	-.244	1	-.097	1	-.343	2	0	3	NC	1	NC	2
131	M18	1	max	.382	1	.244	1	.777	2	8.39e-4	2	NC	1	NC	2
132			min	-.103	7	-.272	7	0	3	0	3	NC	7	NC	3
133		2	max	.382	1	.238	1	.778	2	8.39e-4	2	NC	1	NC	2
134			min	-.103	7	-.271	7	0	3	0	3	NC	7	NC	3
135		3	max	.382	1	.232	1	.778	2	8.39e-4	2	NC	1	NC	2
136			min	-.103	7	-.269	7	0	3	0	3	NC	7	NC	3
137		4	max	.382	1	.226	1	.779	2	8.39e-4	2	NC	1	NC	2
138			min	-.103	7	-.268	7	0	3	0	3	NC	7	NC	3
139		5	max	.382	1	.22	1	.779	2	8.39e-4	2	NC	1	NC	2
140			min	-.103	7	-.267	7	0	3	0	3	NC	7	NC	3
141	M19	1	max	.205	1	.244	1	.627	2	1.309e-3	2	NC	1	NC	2
142			min	-.064	7	-.272	7	0	3	0	3	NC	7	NC	3
143		2	max	.205	1	.245	1	.628	2	1.309e-3	2	NC	1	NC	2
144			min	-.064	7	-.273	7	0	3	0	3	NC	7	NC	3
145		3	max	.205	1	.246	1	.629	2	1.309e-3	2	NC	1	NC	2
146			min	-.064	7	-.273	7	0	3	0	3	NC	7	NC	3
147		4	max	.205	1	.246	1	.631	2	1.309e-3	2	NC	1	NC	2
148			min	-.064	7	-.274	7	0	3	0	3	NC	7	NC	3
149		5	max	.205	1	.247	1	.632	2	1.309e-3	2	NC	1	NC	2
150			min	-.064	7	-.275	7	0	3	0	3	NC	7	NC	3
151	M20	1	max	.267	1	.244	1	.692	2	8.173e-4	2	NC	1	NC	2
152			min	-.087	7	-.272	7	0	3	0	3	NC	7	NC	3
153		2	max	.267	1	.248	1	.693	2	8.173e-4	2	NC	1	NC	2
154			min	-.087	7	-.273	7	0	3	0	3	NC	7	NC	3
155		3	max	.267	1	.252	1	.695	2	8.173e-4	2	NC	1	NC	2
156			min	-.087	7	-.274	7	0	3	0	3	NC	7	NC	3
157		4	max	.267	1	.256	1	.696	2	8.173e-4	2	NC	1	NC	2
158			min	-.087	7	-.275	7	0	3	0	3	NC	7	NC	3
159		5	max	.267	1	.26	1	.697	2	8.173e-4	2	NC	1	NC	2
160			min	-.087	7	-.277	7	0	3	0	3	NC	7	NC	3
161	M21	1	max	.097	1	.244	1	.343	2	0	3	NC	1	NC	2
162			min	-.029	7	-.272	7	0	3	-7.657e-4	6	NC	7	NC	3
163		2	max	.097	1	.224	1	.344	2	0	3	NC	1	NC	2
164			min	-.029	7	-.265	7	0	3	-7.657e-4	6	NC	7	NC	3
165		3	max	.097	1	.204	1	.344	2	0	3	NC	1	NC	2
166			min	-.029	7	-.258	7	0	3	-7.657e-4	6	NC	7	NC	3
167		4	max	.097	1	.184	1	.345	2	0	3	NC	1	NC	2
168			min	-.029	7	-.251	7	0	3	-7.657e-4	6	NC	7	NC	3
169		5	max	.097	1	.164	1	.346	2	0	3	NC	1	NC	2
170			min	-.029	7	-.245	7	0	3	-7.657e-4	6	NC	7	NC	3

ARCADIS

SUBJECT: TOPOK
PARKING CANOPY
JOB NO:

BY: CMW DATE: 12/21/14
CHKD: MSL DATE: 12/23/14

PAGE B20
SHEET 1

LRFD 3

$\frac{wl^2}{2} = \frac{(0.369^{k}/ft)(8ft)^2}{2} = 11.81^{kiff}$ - NEG M

20ft $\frac{wl^2}{8} = 18.45^{kiff}$ - POS MOMENT

1.0W → 44.7#/ft

DESIGN OF ROOF PURLINS:

C10 x 15.3

AXIAL = ~~0.497k (M10)~~ 0.497k (M10)
y SHEAR = ~~2.82k (M10)~~ 4.664k (M15)
z SHEAR = ~~0.216k (M10)~~ 0.529k (M10)
yy MOMENT ~~0.882k-ft (M10)~~ 1.833 k-ft (M10) OK

$\frac{wl^2}{2} = \frac{(0.447^{k}/ft)(8ft)^2}{2} = 1.43^{kiff}$

OR $\frac{wl^2}{8} = \frac{20ft^2}{8} = 2.24^{kiff}$

zz MOMENT = ~~14.69k-ft (M14)~~ ~ (11.7k-ft CANTILEVER)
15.959 k-ft OK (M10); ~~4.07k~~ 5.532 kiff OK (UPLIFT) M15

SHEAR:

$V_N = \cancel{0.6} F_y A_w = \cancel{0.6} \times 0.9 \times 36ksi \times [10in \times 1/4in] = \cancel{5.4k}$ 48.6k

0.9 ← PER NOTE 2

$\frac{wl^2}{2} = 4.74^{kiff}$

0.148#/ft LRFD#6 $\frac{wl^2}{8} = 7.4^{kiff}$

~~8k~~ ~~5.4k~~ 48.6k > ~~3.528k~~ 4.664k OK

BENDING:

STRONG AXIS:

$L_b = 10^{ft}$ $L_p = 2.96^{ft}$ $L_r = 11.0^{ft}$

ZZ MOMENT = ~~14.69k-ft~~ 15.959k-ft (LC #1) - ↓ MOMENT ∴ $L_b = 1^{ft}$ ~ PURLIN BRACED BY ROOF DECK

$L_p = 2.96 > L_b = 1.0^{ft}$ ∴

$M_{N_S} = 0.99 F_y S_x = 0.99 \times 36ksi \times 13.5in^3 = 481.2k\text{-}in = 40.1^{k\text{-}ft}$

M_{N_S}: 40.1 k-ft > ~~14.69~~ 15.959 k-ft OK

WEAK AXIS:

yy MOMENT = ~~0.882~~ 1.833 k-ft

$M_{N_W} = 1.35 F_y S_y = 1.35 \times 36ksi \times 1.15in^3 = 55.89k\text{-}in = 4.66^{k\text{-}ft}$

$M_{NW} = 4.66k\text{-}ft > \cancel{0.882k\text{-}ft}$ 1.833 k-ft

Axial is minimal & ignored

$\frac{\cancel{14.69k\text{-}ft}\ 15.959}{40.1k\text{-}ft} + \frac{\cancel{0.882k\text{-}ft}\ 1.833}{4.66k\text{-}ft} = \cancel{0.856} < 1.0$ OK

0.791 < 1.0 OK

AGM Form 30 12-01

ARCADIS

SUBJECT:

JOB NO:

BY: CMW DATE: 12/10/14

CHKD: MSL DATE: 12/23/14

PAGE B20A

SHEET 1

$\cancel{ZZ} = \cancel{3} \times 5.532^{K/FT}$

$L_b = 10FT \quad L_p = 2.96FT \quad L_R = 11FT$

$L_p < L_b < L_r$

$M_{ln} = 10/11 \times (.36)$

$M_{ln} = \cancel{0.675} \; 0.675 \; F_y S_x = \cancel{0.675} \; 3 \times 36$

$M_{ln} = \cancel{20.25} \; 27.38^{K/FT} > 5.532^{K/FT}$ OK ✓

DEFLECTION:

$\Delta = \sqrt{D_y^2 + D_z^2} = \sqrt{0.646''^2 + 1.475''^2} = 1.61'' > \ell/240 = 1''$

SINCE TOP FLANGE OF C10 x 15.3 IS CONTINUALLY BRACED BY ROOF, & BOTTOM FLANGE IS LATERALLY BRACED, I_{C10} SHALL BE MULTIPLIED BY 3

$\Delta_w = \frac{5w\ell^4}{384EI} = \frac{5 \times (50^{\#}/FT)(20^{FT})^4}{384(29{,}000{,}000 psi)(6.81 in^4)}$ $\quad$ 44.7#/FT ← 1.0W $\quad I_y = 3 \times 2.27 in^4 = 6.81 in^4$

$\Delta_w = 0.911'' < 1''$ OK

STRONG AXIS DEFLECTION

- ~~ASD~~ LC#6A $D + 0.75L_r + 0.75(0.6W) \Rightarrow M10 = 0.233^{K/FT}$, $M15 = 0.239^{K/FT}$ ← USE

$\Delta_{20FT} = \frac{5w\ell^4}{384EI} = 0.441^{IN} \approx \ell/544 \ll \ell/240$ & $1''$ ✓OK

$\Delta_{8FT\,CANT} = \frac{w\ell^4}{8EI} = 0.188^{IN} \approx \ell/866 \ll \ell/240$ & $1''$ ✓OK

AGM Form 30 12-01

ARCADIS

SUBJECT: TOPOK – PARKING CANOPY

JOB NO:

BY: MSL DATE: 12/23/14

CHKD: DATE:

PAGE B20A1

SHEET 1

WEAK AXIS DEFLECTION ~ $0.6W = 0.6 \times 44.7^{\#}/_{FT}$ (1.0W)

- $\Delta_{20FT} = \frac{5wl^4}{384EI} = 1.47^{IN}$ ← TOO MUCH ~ SINCE L3 ANGLE BRACES AT BOT FLANGE AT MIDSPAN & DECK AT TOP, ALL (3) C10 PURLINS TIED TOGETHER, ASSUME 2 C10'S RESISTING LOADS

  ($I \sim 2.27^{IN^4}$)

  Δ_{20FT} (2-C10'S) $= 0.735^{IN} \approx l/327 << l/240$ ✓OK

- $\Delta_{8FT} = \frac{5wl^4}{8EI} = 0.36^{IN} \approx l/266 < l/240$ ✓OK

AGM Form 30 12-01

PURLIN LOADS

$A_{axial} = 0.497^k$ (M10 ~ LC2)

$V_y = 4.664^k$ (M15 LC1)

$V_z = 0.529^k$ (M10 LC6)

$M_z = 15.959^{k\text{-}ft}$ (M10 LC1)

$M_y = 1.833^{k\text{-}ft}$ (M10 LC6)

M_z UPLIFT $= \cancel{4.071^{k\text{-}ft}}$ $5.532^{k\text{-}ft}$ (M10 LC6)

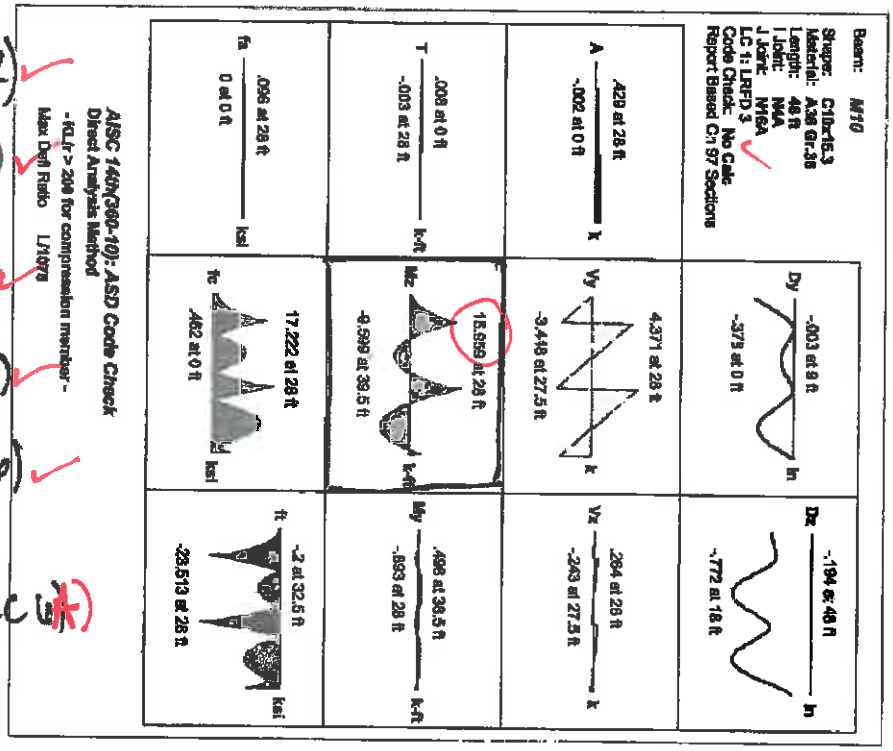

DEFLECTION: (LRFD LOADS)

$D_y = 0.646''$ (M15 LC 1)
$0.373''$ (M10 LC#1)

$D_z = 1.475''$ (M10 LC2)

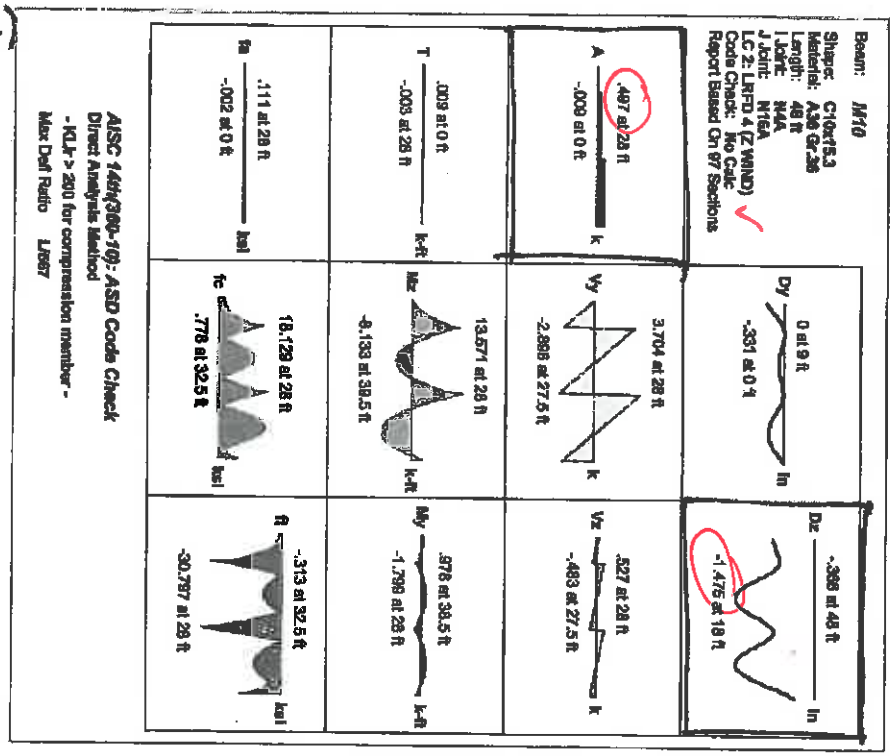

Beam: *M10*

Shape: C10x15.3
Material: A36 Gr.36
Length: 48 ft
I Joint: N4A
J Joint: N18A
LC 3: LRFD 4 (X WIND)
Code Check: No Calc
Report Based On 97 Sections

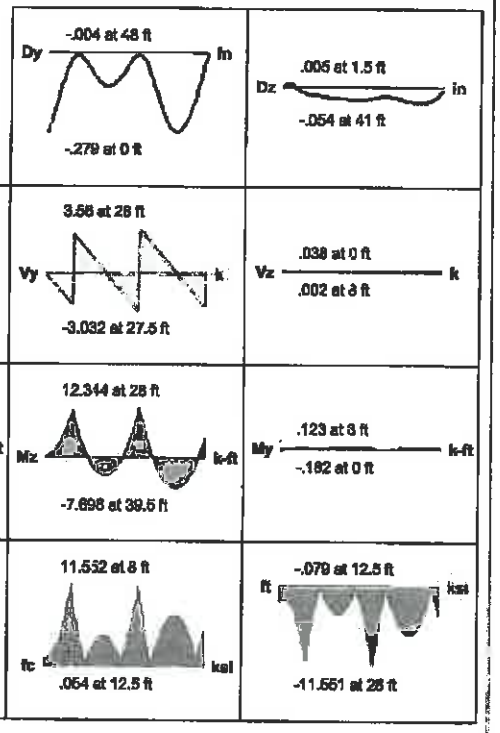

AISC 14th(360-10): ASD Code Check
Direct Analysis Method

- KL/r > 200 for compression member -

Max Defl Ratio L/2094

Beam: *M10*

Shape: C10x15.3
Material: A36 Gr.36
Length: 48 ft
I Joint: N4A
J Joint: N18A
LC 4: LRFD 5 (Z WIND)
Code Check: No Calc
Report Based On 97 Sections

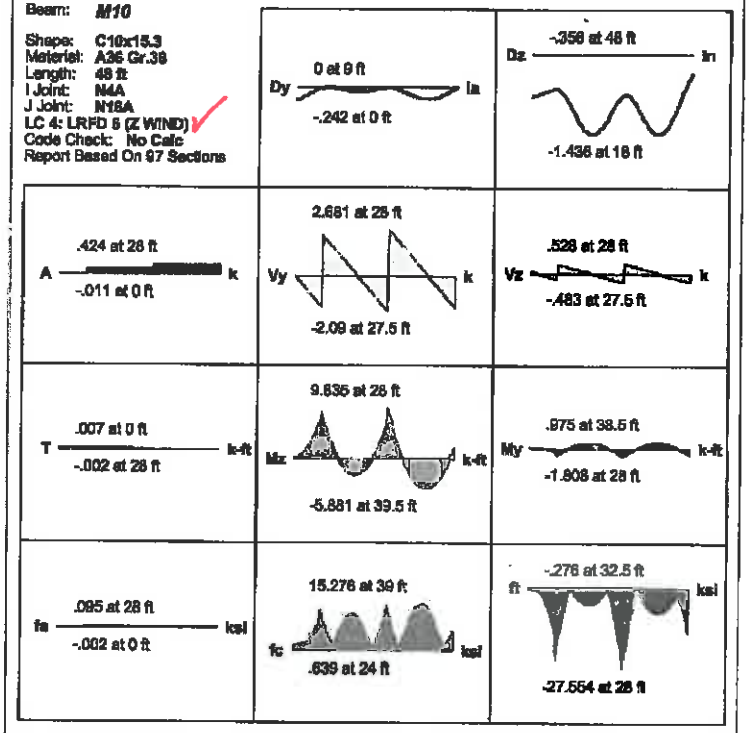

AISC 14th(360-10): ASD Code Check
Direct Analysis Method

- KL/r > 200 for compression member -

Max Defl Ratio L/577

Beam: *M10*

Shape: C10x15.3
Material: A36 Gr.36
Length: 48 ft
I Joint: N4A
J Joint: N18A
LC 5: LRFD 6 (X WIND)
Code Check: No Calc
Report Based On 97 Sections

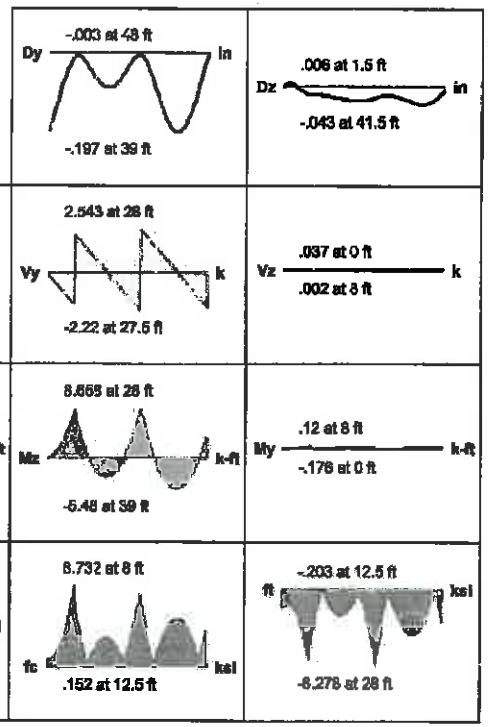

AISC 14th(360-10): ASD Code Check
Direct Analysis Method
- KL/r > 200 for compression member -
Max Defl Ratio L/2972

Beam: *M10*

Shape: C10x15.3
Material: A36 Gr.36
Length: 48 ft
I Joint: N4A
J Joint: N18A
LC 6: LRFD 6A (Z WIND)
Code Check: No Calc
Report Based On 97 Sections

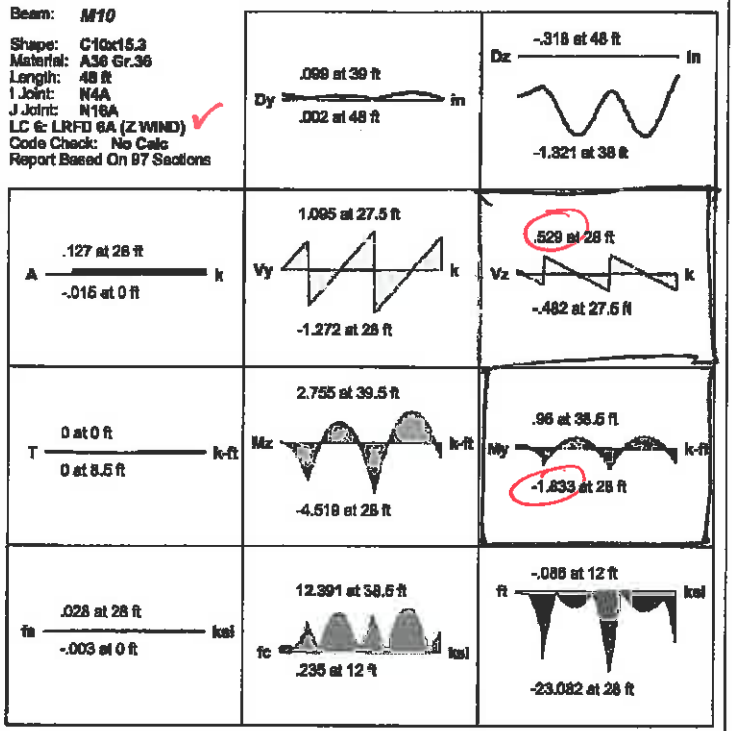

AISC 14th(360-10): ASD Code Check
Direct Analysis Method
- KL/r > 200 for compression member -
Max Defl Ratio L/618

Beam: *M10*

Shape: C10x15.3
Material: A36 Gr.36
Length: 48 ft
I Joint: N4A
J Joint: N16A
LC 7: LRFD 6A (X WIND)
Code Check: No Calc
Report Based On 97 Sections

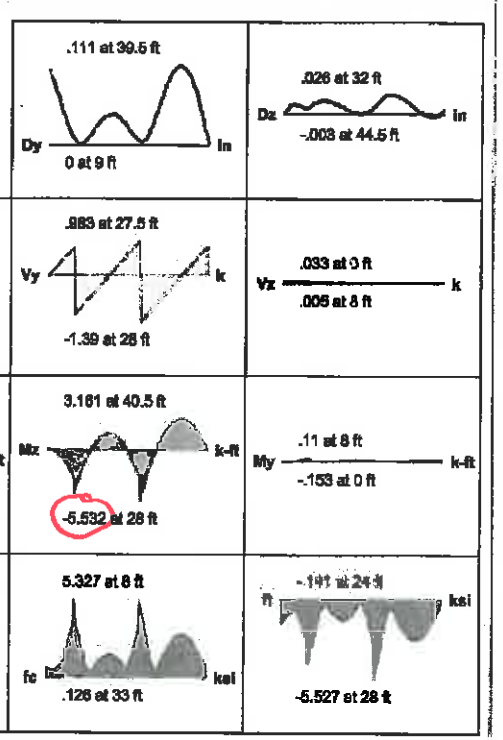

AISC 14th(360-10): ASD Code Check
Direct Analysis Method

- KL/r > 200 for compression member -

Max Defl Ratio L/5260

Beam: *M9*

Shape: C10x15.3
Material: A36 Gr.36
Length: 48 ft
I Joint: N3A
J Joint: N15A
LC 1: LRFD 3
Code Check: No Calc
Report Based On 97 Sections

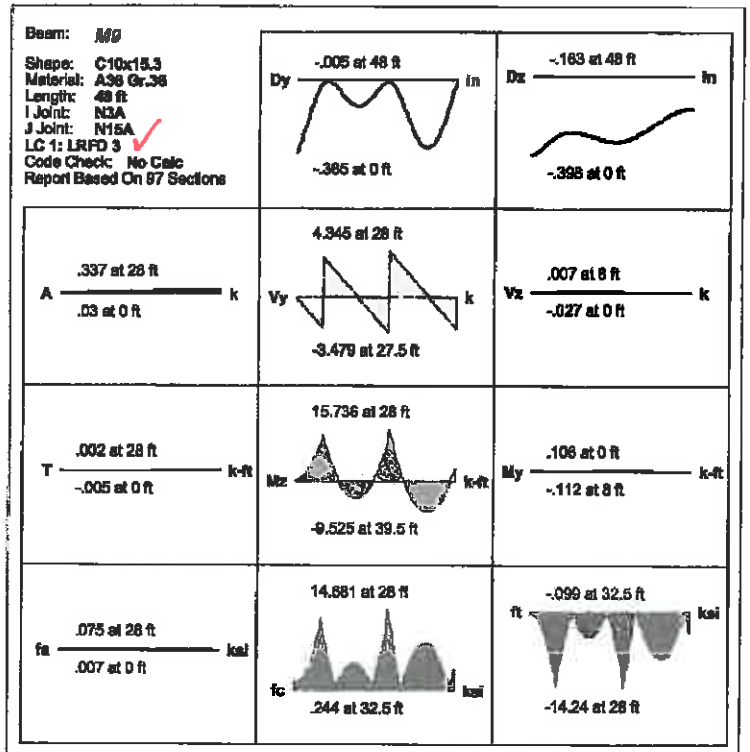

AISC 14th(360-10): ASD Code Check
Direct Analysis Method

- KL/r > 200 for compression member -

Max Defl Ratio L/1602

Beam: M9

Shape: C10x15.3
Material: A36 Gr.36
Length: 48 ft
I Joint: N3A
J Joint: N15A
LC 2: LRFD 4 (Z WIND)
Code Check: No Calc
Report Based On 97 Sections

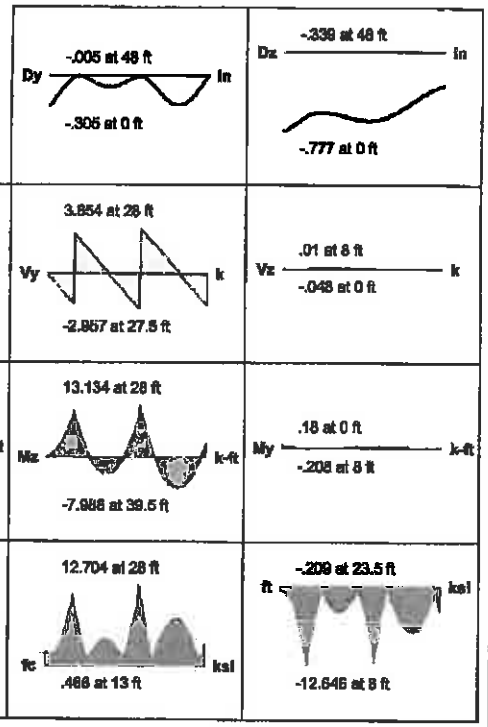

AISC 14th(360-10): ASD Code Check
Direct Analysis Method
- KL/r > 200 for compression member -
Max Defl Ratio L/1920

Beam: M9

Shape: C10x15.3
Material: A36 Gr.36
Length: 48 ft
I Joint: N3A
J Joint: N15A
LC 3: LRFD 4 (X WIND)
Code Check: No Calc
Report Based On 97 Sections

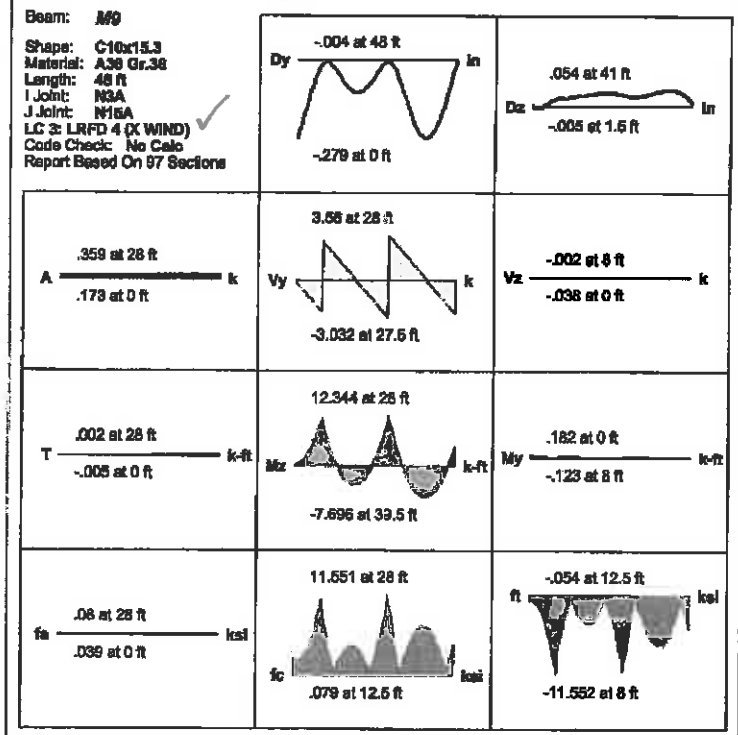

AISC 14th(360-10): ASD Code Check
Direct Analysis Method
- KL/r > 200 for compression member -
Max Defl Ratio L/2094

Beam: M9

Shape: C10x15.3
Material: A36 Gr.36
Length: 48 ft
I Joint: N3A
J Joint: N15A
LC 4: LRFD 6 (Z WIND)
Code Check: No Calc
Report Based On 97 Sections

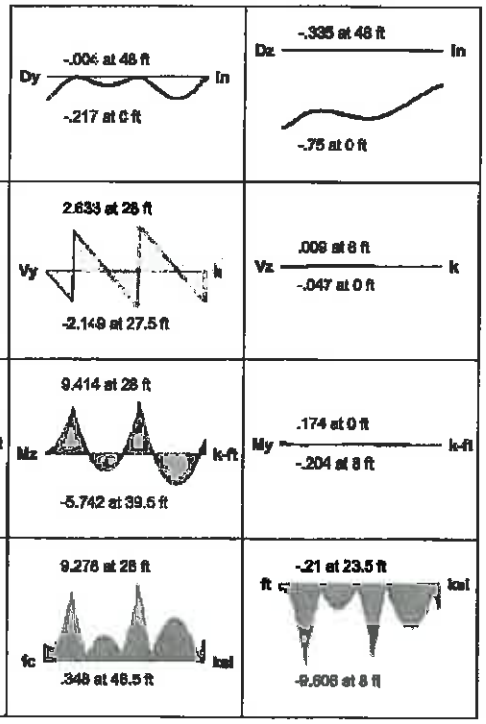

AISC 14th(360-10): ASD Code Check
Direct Analysis Method

- KL/r > 200 for compression member -

Max Defl Ratio L/2701

Beam: M9

Shape: C10x15.3
Material: A36 Gr.36
Length: 48 ft
I Joint: N3A
J Joint: N15A
LC 5: LRFD 8 (X WIND)
Code Check: No Calc
Report Based On 97 Sections

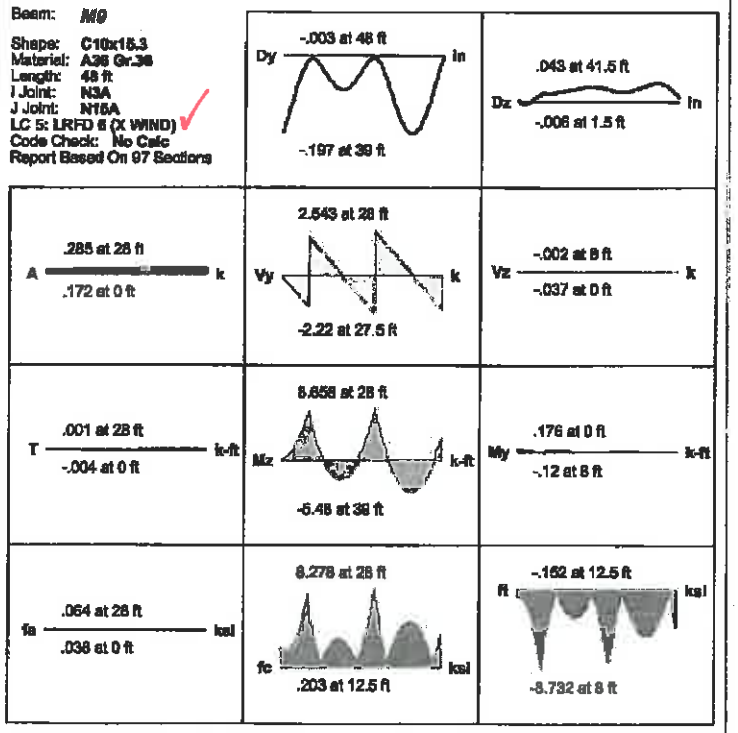

AISC 14th(360-10): ASD Code Check
Direct Analysis Method

- KL/r > 200 for compression member -

Max Defl Ratio L/2972

Beam: M9

Shape: C10x15.3
Material: A36 Gr.36
Length: 48 ft
I Joint: N3A
J Joint: N15A
LC 6: LRFD 6A (Z WIND)
Code Check: No Calc
Report Based On 97 Sections

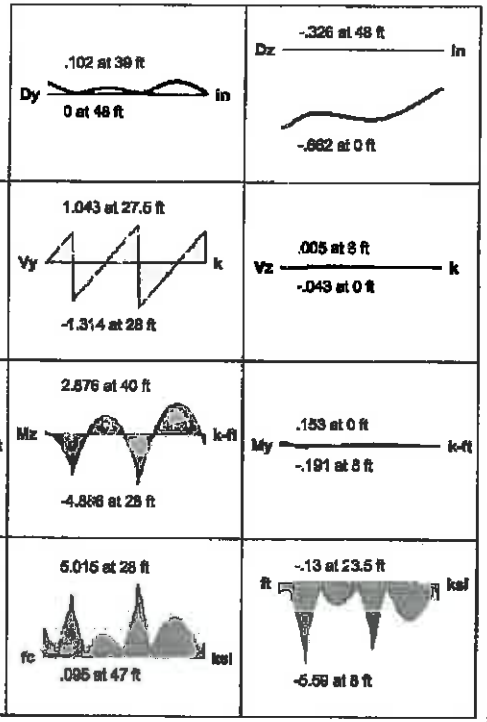

AISC 14th(360-10): ASD Code Check
Direct Analysis Method

- KL/r > 200 for compression member -

Max Defl Ratio L/4389

Beam: M9

Shape: C10x15.3
Material: A36 Gr.36
Length: 48 ft
I Joint: N3A
J Joint: N15A
LC 7: LRFD 6A (X WIND)
Code Check: No Calc
Report Based On 97 Sections

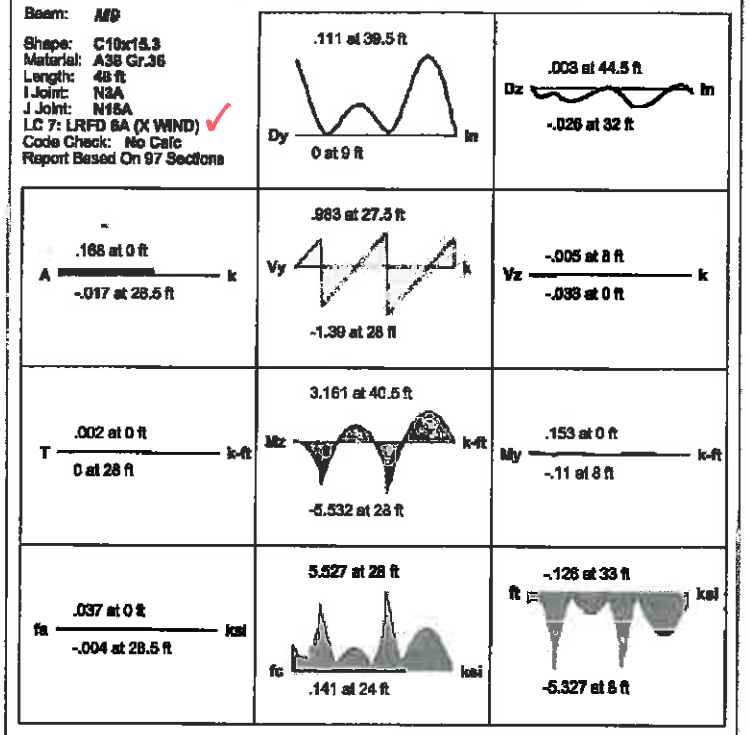

AISC 14th(360-10): ASD Code Check
Direct Analysis Method

- KL/r > 200 for compression member -

Max Defl Ratio L/5280

Beam: *M15*

Shape: C10x15.3
Material: A36 Gr.36
Length: 48 ft
I Joint: N3.5
J Joint: N15.5
LC 1: LRFD 3
Code Check: 0.877 (bending)
Report Based On 97 Sections

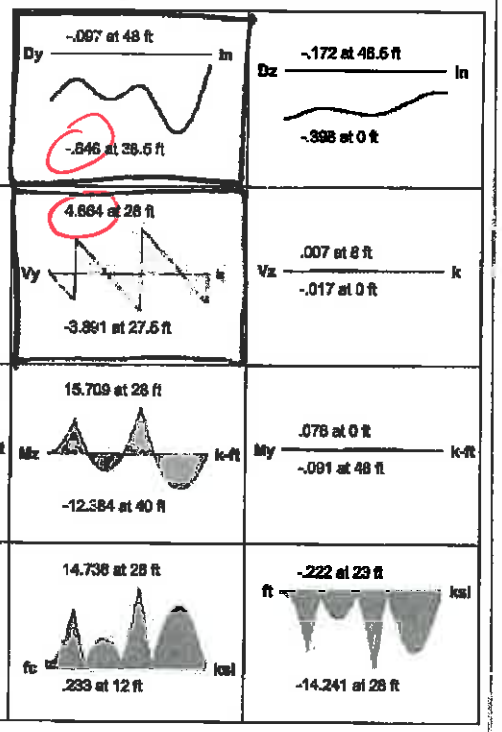

AISC 14th(360-10): ASD Code Check
Direct Analysis Method

Max Bending Check	0.877	Max Shear Check	0.160 (y)
Location	28 ft	Location	28 ft
Equation	H1-1b	Max Defl Ratio	L/1167
Bending Flange	Compact	Compression Flange	Non-Slender
Bending Web	Compact	Compression Web	Non-Slender

			y-y	z-z
Fy	36 ksi			
Pnc/om	1.028 k	Lb	48 ft	48 ft
Pnt/om	96.575 k	KL/r	809.186	148.612
Mny/om	3.319 k-ft			
Mnz/om	18.373 k-ft			
Vny/om	31.042 k	L Comp Flange	10 ft	
Vnz/om	29.324 k	Warp Length	48 ft	
Cb	1	L-torque	48 ft	
		Tau_b	1	

Beam: *M15*

Shape: C10x15.3
Material: A36 Gr.36
Length: 48 ft
I Joint: N3.5
J Joint: N15.5
LC 2: LRFD 4 (Z WIND)
Code Check: 0.761 (bending)
Report Based On 97 Sections

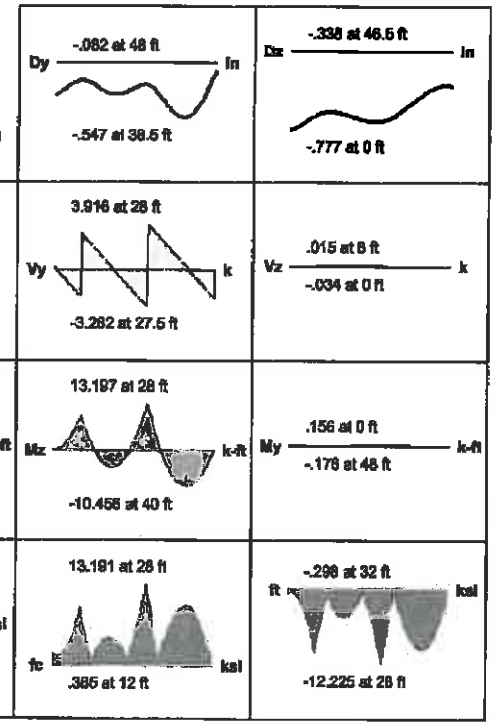

AISC 14th(360-10): ASD Code Check
Direct Analysis Method

Max Bending Check	0.761	Max Shear Check	0.127 (y)
Location	28 ft	Location	28 ft
Equation	H1-1b	Max Defl Ratio	L/1361
Bending Flange	Compact	Compression Flange	Non-Slender
Bending Web	Compact	Compression Web	Non-Slender

			y-y	z-z
Fy	36 ksi			
Pnc/om	1.028 k	Lb	48 ft	48 ft
Pnt/om	96.575 k	KL/r	809.186	148.612
Mny/om	3.319 k-ft			
Mnz/om	18.373 k-ft			
Vny/om	31.042 k	L Comp Flange	10 ft	
Vnz/om	29.324 k	Warp Length	48 ft	
Cb	1	L-torque	48 ft	
		Tau_b	1	

Beam: *M15*

Shape: C10x15.3
Material: A36 Gr.36
Length: 48 ft
I Joint: N3.5
J Joint: N16.5
LC 3: LRFD 4 (X WIND)
Code Check: No Calc
Report Based On 97 Sections

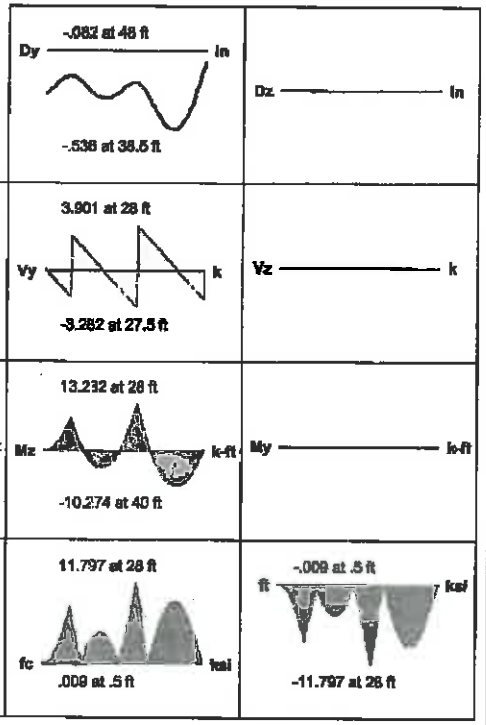

AISC 14th(360-10): ASD Code Check
Direct Analysis Method

- KL/r > 200 for compression member -

Max Defl Ratio L/1393

Beam: *M15*

Shape: C10x15.3
Material: A36 Gr.36
Length: 48 ft
I Joint: N3.5
J Joint: N16.5
LC 4: LRFD 6 (Z WIND)
Code Check: 0.561 (bending)
Report Based On 97 Sections

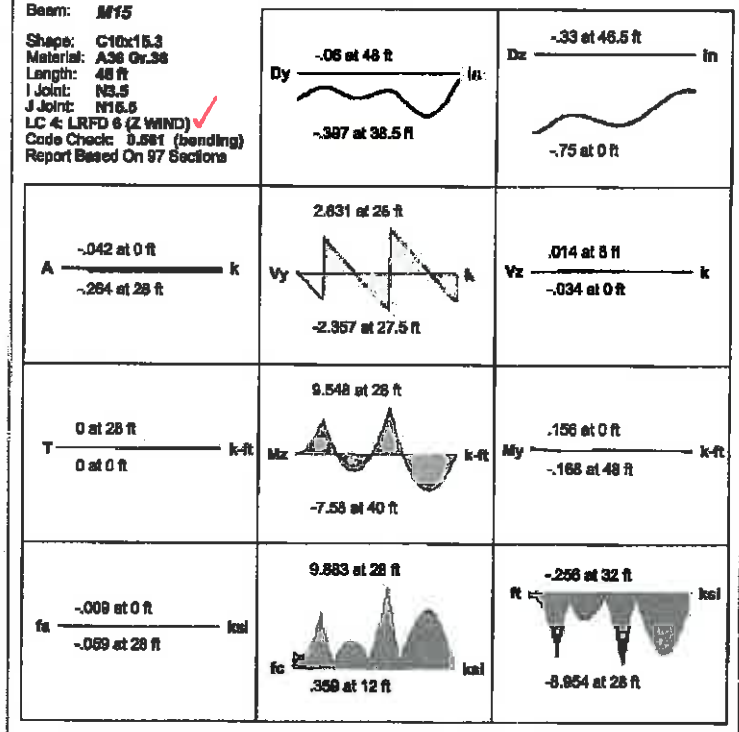

AISC 14th(360-10): ASD Code Check
Direct Analysis Method

Max Bending Check	0.561	Max Shear Check	0.082 (y)
Location	28 ft	Location	28 ft
Equation	H1-1b	Max Defl Ratio	L/1901
Bending Flange	Compact	Compression Flange	Non-Slender
Bending Web	Compact	Compression Web	Non-Slender

			y-y	z-z
Fy	36 ksi	Lb	48 ft	48 ft
Pnc/om	1.028 k	KL/r	609.166	148.612
Pnt/om	96.575 k			
Mny/om	3.319 k-ft			
Mnz/om	18.373 k-ft			
Vny/om	31.042 k	L Comp Flange	10 ft	
Vnz/om	29.324 k	Warp Length	48 ft	
Cb	1	L-torque	48 ft	
		Tau_b	1	

Beam: *M15*

Shape: C10x15.3
Material: A36 Gr.36
Length: 48 ft
I Joint: N3.5
J Joint: N15.5
LC 5: LRFD 6 (X WIND)
Code Check: No Calc
Report Based On 97 Sections

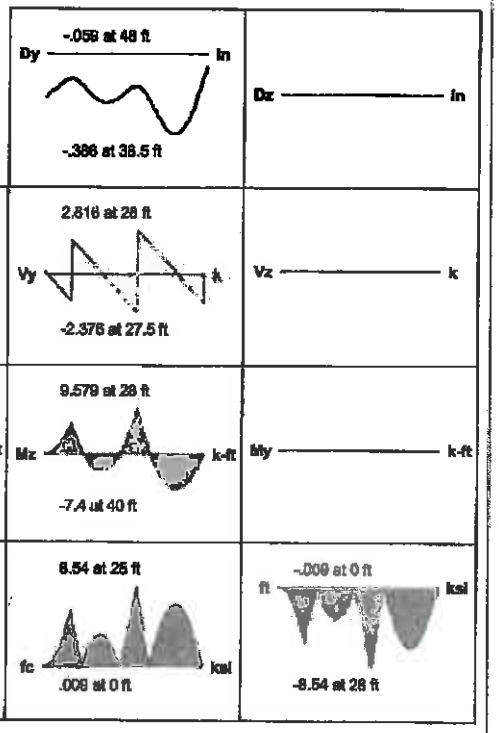

AISC 14th(360-10): ASD Code Check
Direct Analysis Method

- KL/r > 200 for compression member -

Max Defl Ratio L/1824

Beam: *M15*

Shape: C10x15.3
Material: A36 Gr.36
Length: 48 ft
I Joint: N3.5
J Joint: N15.5
LC 6: LRFD 6A (Z WIND)
Code Check: 0.239 (bending)
Report Based On 97 Sections

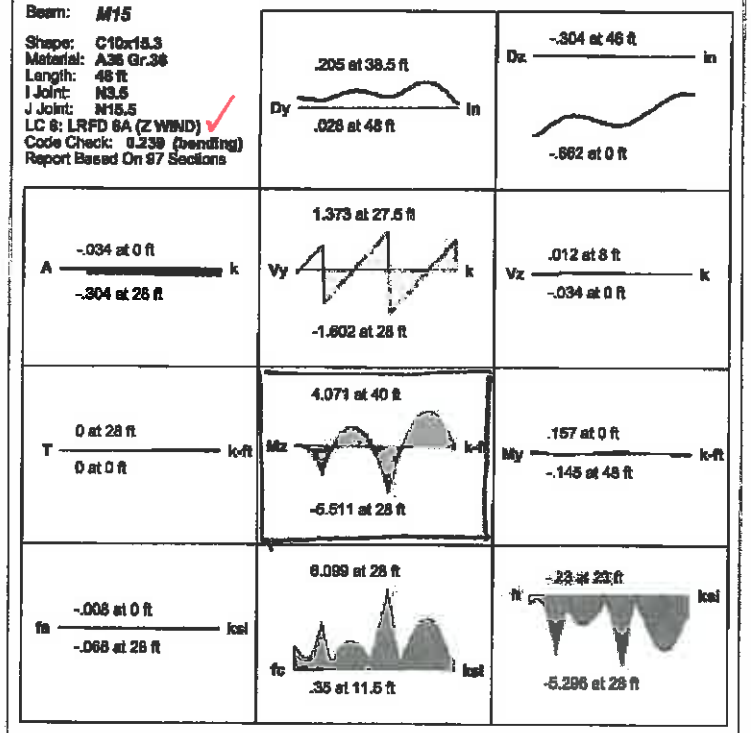

AISC 14th(360-10): ASD Code Check
Direct Analysis Method

Max Bending Check	0.239	Max Shear Check	0.052 (y)
Location	40.5 ft	Location	28 ft
Equation	H1-1b	Max Defl Ratio	L/3420
Bending Flange	Compact	Compression Flange	Non-Slender
Bending Web	Compact	Compression Web	Non-Slender

			y-y	z-z
Fy	36 ksi			
Pnc/om	1.028 k	Lb	48 ft	48 ft
Pnt/om	56.576 k	KL/r	999.166	148.812
Mny/om	3.319 k-ft			
Mnz/om	16.373 k-ft			
Vny/om	31.042 k	L Comp Flange	10 ft	
Vnz/om	29.324 k	Warp Length	48 ft	
Cb	1	L-torque	48 ft	
		Tau_b	1	

Beam: *M15*

Shape: C18x15.3
Material: A36 Gr.36
Length: 48 ft
I Joint: N3.5
J Joint: N15.5
LC 7: LRFD 6A (X WIND)
Code Check: No Calc
Report Based On 97 Sections

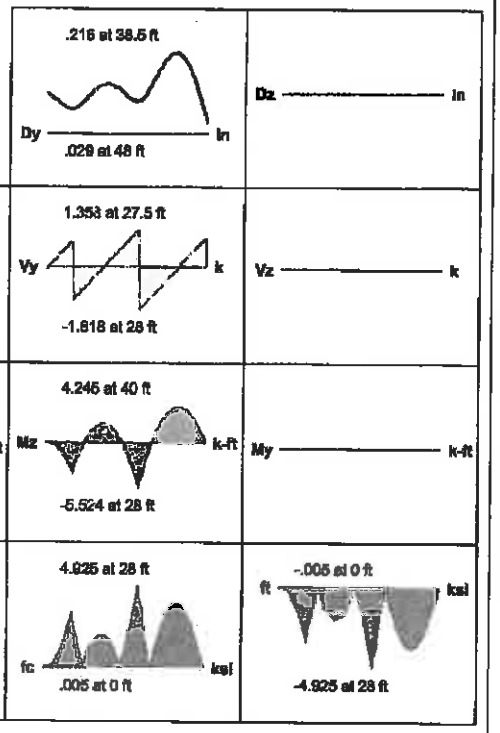

AISC 14th(360-10): ASD Code Check
Direct Analysis Method

- KL/r > 200 for compression member -

Max Defl Ratio L/3339

ARCADIS

SUBJECT: TOPOK
PARKING CANOPY
JOB NO:

BY: CMW DATE: 12/3/14
CHKD: MSL DATE: 12/23/14

PAGE B21
SHEET 1

ROOF BEAMS: (M11, M12, M13, & M14)

AXIAL = 1.108K ✓	MODEL ASSUMES THESE MEMBERS REPRESENT 2 C10x15.3 BEAMS (÷2) =	=	0.554K ✓
y SHEAR = ~~5.028K~~ 5.07K ✓		=	~~2.514K~~ 2.54 ✓
z SHEAR = 0.272K ✓		=	0.136K ✓
yy MOMENT = 1.264K-FT ✓		=	0.632K-FT ✓
zz MOMENT = ~~-20.895~~ K-FT ✓ 20.91		=	-10.5K-FT ✓

* ALL LOADS ARE ≤ TO PURLIN LOADS ✓, THEREFORE C10x15.3 OK FOR BEAM DESIGN.

** FOR ALL FRAMING CONNECTIONS, SEE "SECTION BD".

COLUMN DESIGN:

MEMBER SIZE = HSS 6x6x1/4

AXIAL = ~~13.268K~~ 13.303K (LC1 - M6) ✓

y SHEAR = 0.489K (M7) ✓

z SHEAR = ~~1.129K~~ (M6) 1.169K

yy MOMENT = ~~9.031K-FT~~ (M6 - LC ~~2~~ 3) 11.04

zz MOMENT = 1.349K-FT ~~(M8 - LC3)~~ OK

COMPRESSION:

$$Kl/r = \frac{1.0 \times 10.67\,FT \times 12\,IN/FT}{2.34\,IN} = 54.72 \checkmark$$

$$800/\sqrt{F_y} = 117.95 \checkmark > 54.72 \checkmark \therefore P_n = 0.9 F_y A_g \times 0.658^P \checkmark$$

$$P = F_y (Kl/r)^2 / 286{,}000 = 0.482 \checkmark$$

Envelope Member Section Forces

	Member	Sec		Axial[k]	LC	y Shear[k]	LC	z Shear[k]	LC	Torque[k...	LC	y-y Mom...	LC	z-z Mom...	LC
1	M12	1	max	.468	2	1.405	3	.272	6	0	3	.084	3	1.791	3
2			min	-.069	7	-.965	6	-.051	3	0	2	-1.264	6	-3.734	6
3		2	max	.468	2	1.351	3	.272	6	0	3	-.026	7	.787	7
4			min	-.069	7	-1.006	6	-.051	3	0	2	-.496	2	-3.996	2
5		3	max	.482	2	.531	7	.272	6	0	3	.366	6	2.318	7
6			min	-.069	7	-1.826	2	-.009	4	0	2	-.225	3	-7.501	1
7		4	max	.482	2	.49	7	.051	3	0	3	.123	6	2.262	6
8			min	-.069	7	-1.881	2	-.032	6	0	2	-.071	3	-2.343	3
9		5	max	.482	2	.448	7	.051	3	0	3	.084	3	4.943	2
10			min	-.069	7	-1.936	2	-.032	6	0	2	.026	6	-.62	7
11	M13	1	max	1.108	2	3.948	1	-.004	1	0	3	.138	6	4.89	3
12			min	-.194	7	-2.378	6	-.047	7	0	2	.035	1	-7.758	6
13		2	max	1.108	2	3.893	1	-.004	1	0	3	.031	2	2.457	7
14			min	-.194	7	-2.419	6	-.047	7	0	2	-.033	7	-9.767	2
15		3	max	1.108	2	1.521	7	.047	7	0	3	.019	1	6.959	7
16			min	-.194	7	-4.918	1	-.04	6	0	2	-.173	7	-20.895	1
17		4	max	1.08	2	1.48	7	.047	7	0	3	-.001	1	5.092	6
18			min	-.194	7	-4.973	1	-.007	1	0	2	-.033	7	-6.378	3
19		5	max	1.08	2	1.439	7	.047	7	0	3	.107	7	11.072	2
20			min	-.194	7	-5.028	1	-.007	1	0	2	-.021	1	-1.921	7
21	M14	1	max	.797	2	2.942	1	-.045	3	0	3	.642	6	3.715	3
22			min	-.171	7	-1.878	6	-.151	6	0	2	.134	3	-6.672	6
23		2	max	.797	2	2.887	1	-.045	3	0	3	.215	2	1.798	7
24			min	-.171	7	-1.919	6	-.151	6	0	2	-.024	7	-7.888	2
25		3	max	.845	2	2.757	3	.049	4	0	3	-.069	1	5.105	7
26			min	-.171	7	-3.815	1	-.151	6	0	2	-.263	6	-15.904	1
27		4	max	.845	2	1.082	7	.063	6	0	3	0	3	4.189	6
28			min	-.171	7	-3.87	1	.016	1	0	2	-.053	6	-4.803	3
29		5	max	.845	2	1.041	7	.063	6	0	3	.153	7	9.406	2
30			min	-.171	7	-3.925	1	.016	1	0	2	.044	1	-1.386	7

B21B

Envelope Member Section Forces

	Member	Sec		Axial[k]	LC	y Shear[k]	LC	z Shear[k]	LC	Torque[k...	LC	y-y Mom...	LC	z-z Mom...	LC
1	M3	1	max	10.154	1	.235	7	.691	6	0	1	0	1	0	1
2			min	-3.651	6	-.098	1	-.376	3	0	1	0	1	0	1
3		2	max	10.097	1	.19	7	.646	6	0	1	1.784	6	.261	1
4			min	-3.694	6	-.098	1	-.376	3	0	1	-1.002	3	-.566	7
5		3	max	10.04	1	.144	7	.602	6	0	1	3.449	6	.522	1
6			min	-3.736	6	-.098	1	-.376	3	0	1	-2.004	3	-1.011	7
7		4	max	9.983	1	.099	7	.557	6	0	1	4.994	6	.783	1
8			min	-3.779	6	-.098	1	-.376	3	0	1	-3.006	3	-1.336	7
9		5	max	6.986	1	0	7	.833	2	-.134	3	.008	2	1.097	2
10			min	-2.035	7	-.223	2	-.027	5	-.642	6	-.002	7	-1.494	7
11	M4	1	max	11.108	1	.235	7	.952	2	0	1	0	1	0	1
12			min	-2.904	7	-.068	1	-.143	7	0	1	0	1	0	1
13		2	max	11.051	1	.19	7	.952	2	0	1	2.54	2	.183	1
14			min	-2.947	7	-.068	1	-.143	7	0	1	-.381	7	-.566	7
15		3	max	10.994	1	.144	7	.952	2	0	1	5.08	2	.365	1
16			min	-2.99	7	-.068	1	-.143	7	0	1	-.763	7	-1.011	7
17		4	max	10.937	1	.099	7	.952	2	0	1	7.621	2	.548	1
18			min	-3.033	7	-.068	1	-.143	7	0	1	-1.144	7	-1.336	7
19		5	max	6.957	1	.004	6	.052	4	.153	7	.004	6	.736	1
20			min	-2.035	7	-.082	3	.015	1	.044	1	-.005	3	-1.494	7
21	M5	1	max	12.178	1	.223	7	.783	6	0	1	0	1	0	1
22			min	-4.629	6	-.317	1	-.499	3	0	1	0	1	0	1
23		2	max	12.121	1	.223	7	.738	6	0	1	2.028	6	.847	1
24			min	-4.671	6	-.317	1	-.499	3	0	1	-1.332	3	-.595	7
25		3	max	12.064	1	.223	7	.693	6	0	1	3.937	6	1.694	1
26			min	-4.714	6	-.317	1	-.499	3	0	1	-2.665	3	-1.189	7
27		4	max	12.007	1	.223	7	.648	6	0	1	5.726	6	2.541	1
28			min	-4.757	6	-.317	1	-.499	3	0	1	-3.997	3	-1.784	7
29		5	max	8.005	1	.183	7	1.071	2	-.035	1	.004	1	3.366	1
30			min	-2.429	7	-.292	1	.004	7	-.138	6	-.001	7	-2.345	7
31	M6	1	max	13.263	1	.223	7	1.129	2	0	1	0	1	0	1
32			min	-3.697	7	-.276	1	-.195	7	0	1	0	1	0	1
33		2	max	13.206	1	.223	7	1.129	2	0	1	3.01	2	.736	1
34			min	-3.739	7	-.276	1	-.195	7	0	1	-.52	7	-.595	7
35		3	max	13.149	1	.223	7	1.129	2	0	1	6.021	2	1.472	1
36			min	-3.782	7	-.276	1	-.195	7	0	1	-1.04	7	-1.189	7
37		4	max	13.091	1	.223	7	1.129	2	0	1	9.031	2	2.208	1
38			min	-3.825	7	-.276	1	-.195	7	0	1	-1.559	7	-1.784	7
39		5	max	8.01	1	.183	7	-.004	7	.107	7	.002	6	2.917	1
40			min	-2.429	7	-.243	1	-.039	1	-.021	1	-.003	1	-2.345	7
41	M7	1	max	4.722	1	.412	3	.422	6	0	1	0	1	0	1
42			min	-1.745	6	-.145	6	-.182	3	0	1	0	1	0	1
43		2	max	4.664	1	.412	3	.377	6	0	1	1.065	6	.386	6
44			min	-1.788	6	-.145	6	-.182	3	0	1	-.486	3	-1.099	3
45		3	max	4.607	1	.412	3	.332	6	0	1	2.01	6	.772	6
46			min	-1.831	6	-.145	6	-.182	3	0	1	-.971	3	-2.197	3
47		4	max	4.55	1	.412	3	.287	6	0	1	2.836	6	1.158	6
48			min	-1.873	6	-.145	6	-.182	3	0	1	-1.457	3	-3.296	3
49		5	max	3.113	1	.489	2	.477	2	1.264	6	0	7	1.316	6
50			min	-.952	6	-.018	7	-.005	7	-.084	3	-.003	1	-4.344	3
51	M8	1	max	5.287	1	.412	3	.502	2	0	1	0	1	0	1
52			min	-1.108	7	-.081	6	-.064	7	0	1	0	1	0	1
53		2	max	5.23	1	.412	3	.502	2	0	1	1.34	2	.215	6
54			min	-1.151	7	-.081	6	-.064	7	0	1	-.169	7	-1.099	3
55		3	max	5.173	1	.412	3	.502	2	0	1	2.68	2	.43	6
56			min	-1.194	7	-.081	6	-.064	7	0	1	-.339	7	-2.197	3

Envelope Member Section Forces (Continued)

	Member	Sec		Axial[k]	LC	y Shear[k]	LC	z Shear[k]	LC	Torque[k...	LC	y-y Mom...	LC	z-z Mom...	LC
57		4	max	5.116	1	.412	3	.502	2	0	1	4.02	2	.646	6
58			min	-1.237	7	-.081	6	-.064	7	0	1	-.508	7	-3.296	3
59		5	max	3.137	1	.351	3	.006	4	.084	3	.002	1	.835	6
60			min	-.909	6	-.049	6	0	1	.026	6	-.001	6	-4.344	3

B21C

Column: *M6*

Shape: HSS6x6x4
Material: A500 Gr.B Rect
Length: 10.67 ft
I Joint: N9
J Joint: N11A
LC 1: LRFD 3
Code Check: 0.338 (bending)
Report Based On 97 Sections

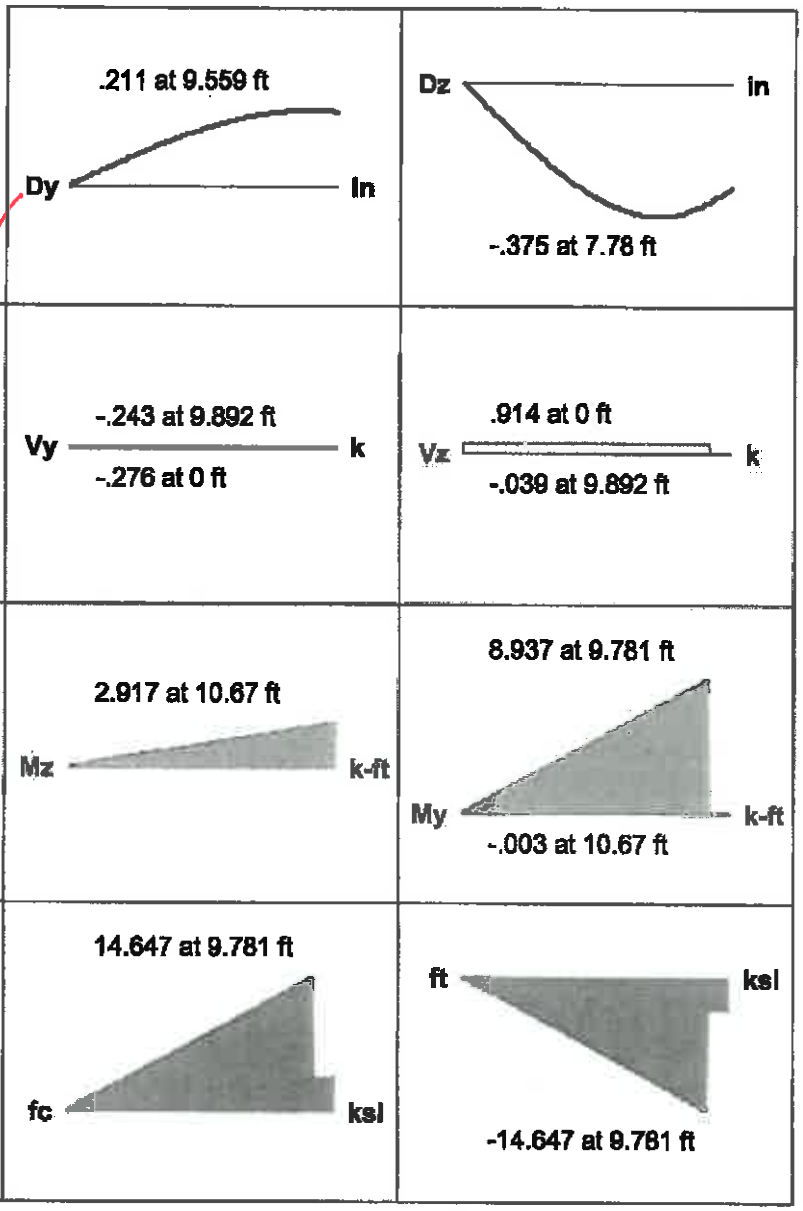

AISC 14th(360-10): LRFD Code Check

Direct Analysis Method

Max Bending Check	0.338	Max Shear Check	0.015 (z)
Location	9.781 ft	Location	0 ft
Equation	H1-1b	Max Defl Ratio	L/708
Bending Flange	Compact	Compression Flange	Non-Slender
Bending Web	Compact	Compression Web	Non-Slender

Fy	46 ksi
phi*Pnc	177.248 k
phi*Pnt	216.936 k
phi*Mny	38.64 k-ft
phi*Mnz	38.64 k-ft
phi*Vny	61.361 k
phi*Vnz	61.361 k
phi*Tn	31.98 k-ft
Cb	1.656

	y-y	z-z
Lb	10.67 ft	10.67 ft
KL/r	54.806	54.806

L Comp Flange	10.67 ft
Warp Length	NC
L-torque	10.67 ft
Tau_b	1

Column: *M6*

Shape: HSS6x6x4
Material: A500 Gr.B Rect
Length: 10.67 ft
I Joint: N9
J Joint: N11A
LC 2: LRFD 4 (Z WIND)
Code Check: 0.371 (bending)
Report Based On 97 Sections

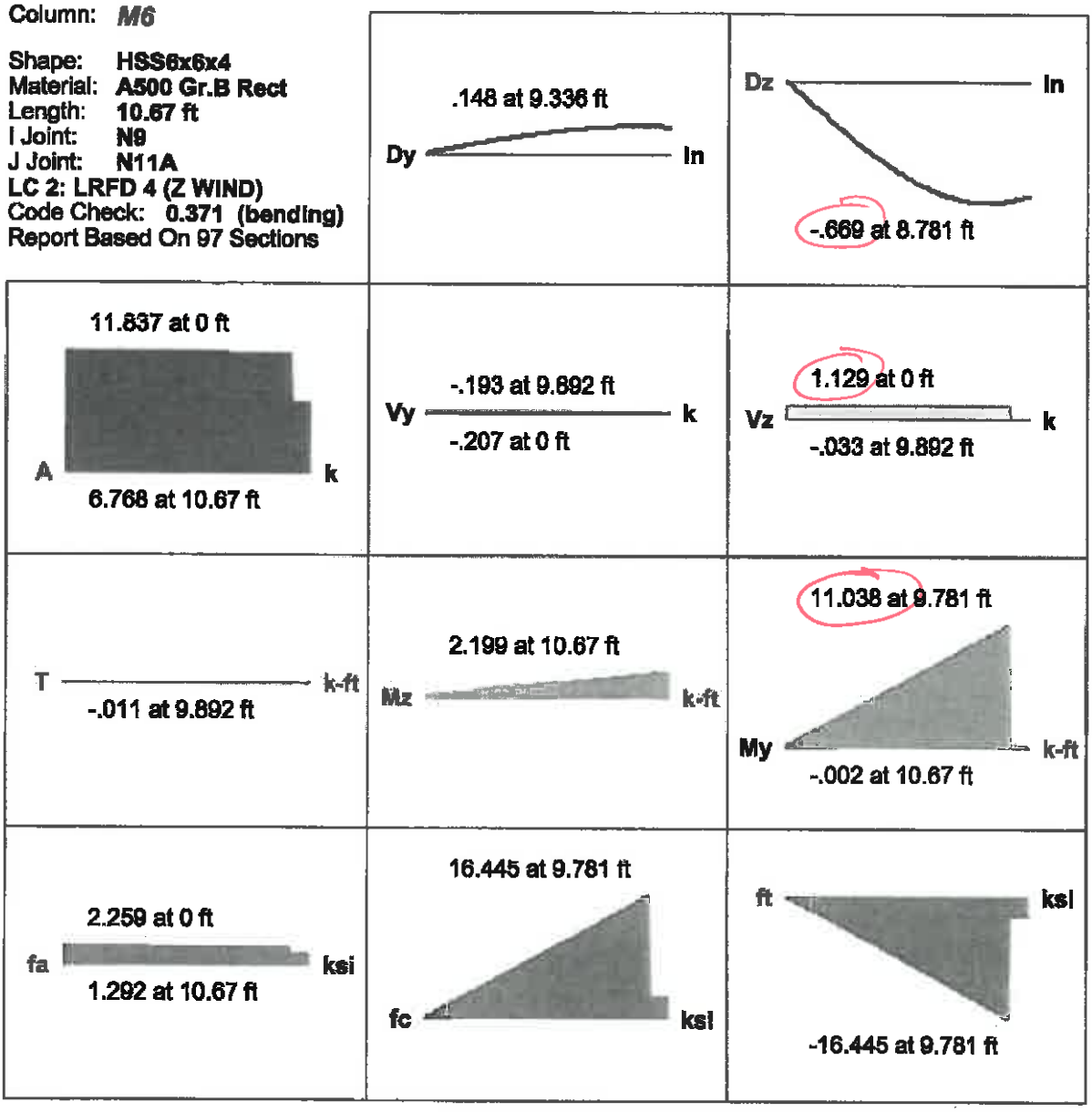

AISC 14th(360-10): LRFD Code Check

Direct Analysis Method

Max Bending Check	0.371	Max Shear Check	0.018 (z)
Location	9.781 ft	Location	0 ft
Equation	H1-1b	Max Defl Ratio	L/573
Bending Flange	Compact	Compression Flange	Non-Slender
Bending Web	Compact	Compression Web	Non-Slender

Fy	46 ksi
phi*Pnc	177.248 k
phi*Pnt	216.936 k
phi*Mny	38.64 k-ft
phi*Mnz	38.64 k-ft
phi*Vny	61.361 k
phi*Vnz	61.361 k
phi*Tn	31.98 k-ft
Cb	1.661

	y-y	z-z
Lb	10.67 ft	10.67 ft
KL/r	54.806	54.806

L Comp Flange	10.67 ft
Warp Length	NC
L-torque	10.67 ft
Tau_b	1

Column: *M8*

Shape: HSS6x6x4
Material: A500 Gr.B Rect
Length: 10.67 ft
I Joint: N13
J Joint: N15A
LC 3: LRFD 4 (X WIND)
Code Check: 0.162 (bending)
Report Based On 97 Sections

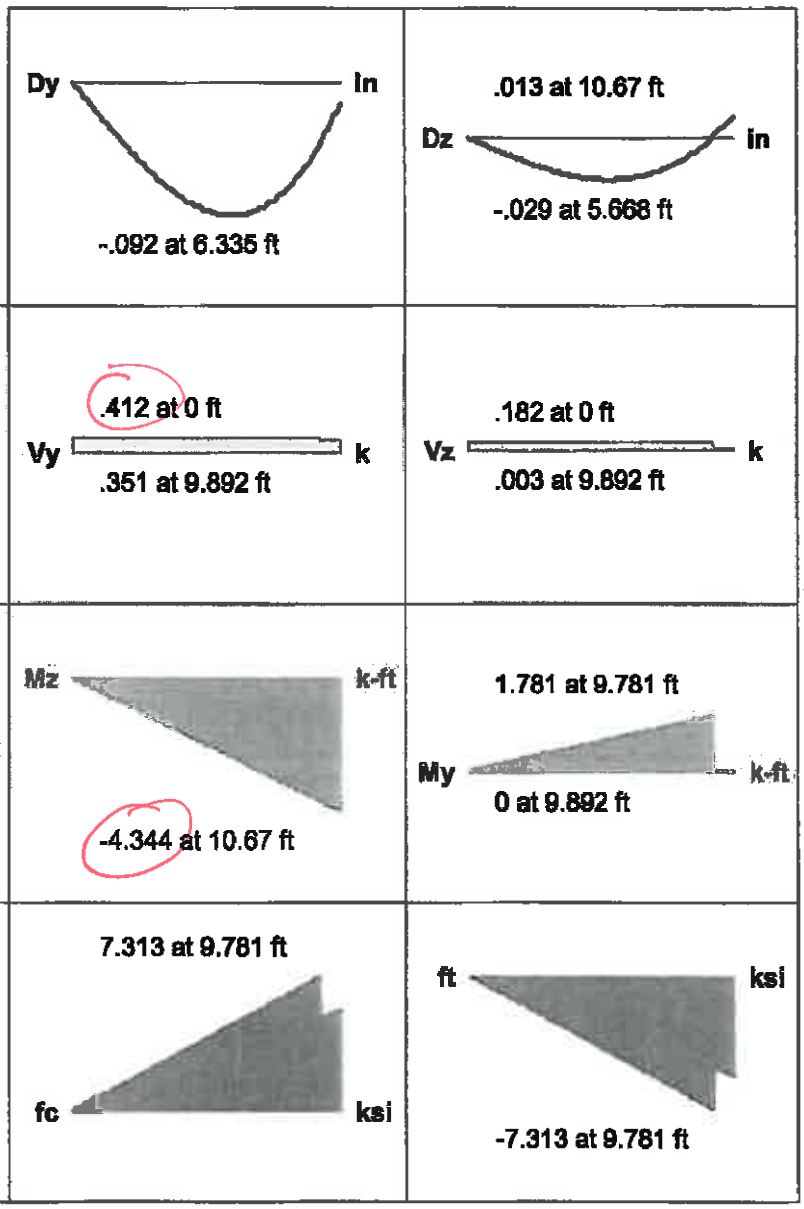

AISC 14th(360-10): LRFD Code Check

Direct Analysis Method

Max Bending Check	0.162	Max Shear Check	0.008 (y)
Location	9.781 ft	Location	9.892 ft
Equation	H1-1b	Max Defl Ratio	L/1532
Bending Flange	Compact	Compression Flange	Non-Slender
Bending Web	Compact	Compression Web	Non-Slender

Fy	46 ksi
phi*Pnc	177.248 k
phi*Pnt	216.936 k
phi*Mny	38.64 k-ft
phi*Mnz	38.64 k-ft
phi*Vny	61.361 k
phi*Vnz	61.361 k
phi*Tn	31.98 k-ft
Cb	1.654

	y-y	z-z
Lb	10.67 ft	10.67 ft
KL/r	54.806	54.806

L Comp Flange	10.67 ft
Warp Length	NC
L-torque	10.67 ft
Tau_b	1

ARCADIS

SUBJECT: TOPPER

PARKING CANOPY

JOB NO:

BY: CMW DATE: 12/18/14

CHKD: MSL DATE: 12/23/14

PAGE B21D

SHEET 1

$\Delta = 0.406^{IN}$ LC 9 (ASD5) - MEMBER 5 ✓

LSHT B21E

$\ell/240 = 10.67^{FT} \times 12^{IN}/FT / 240 = 0.534^{IN}$ ✓

$\Delta < \ell/240$ OK ✓

AGM Form 30 12-01

B21E

Column: *M5*

Shape: HSS6x6x4
Material: A500 Gr.B Rect
Length: 10.67 ft
I Joint: N10
J Joint: N12A
LC 9: ASD 5
Code Check: 0.070 (bending)
Report Based On 97 Sections

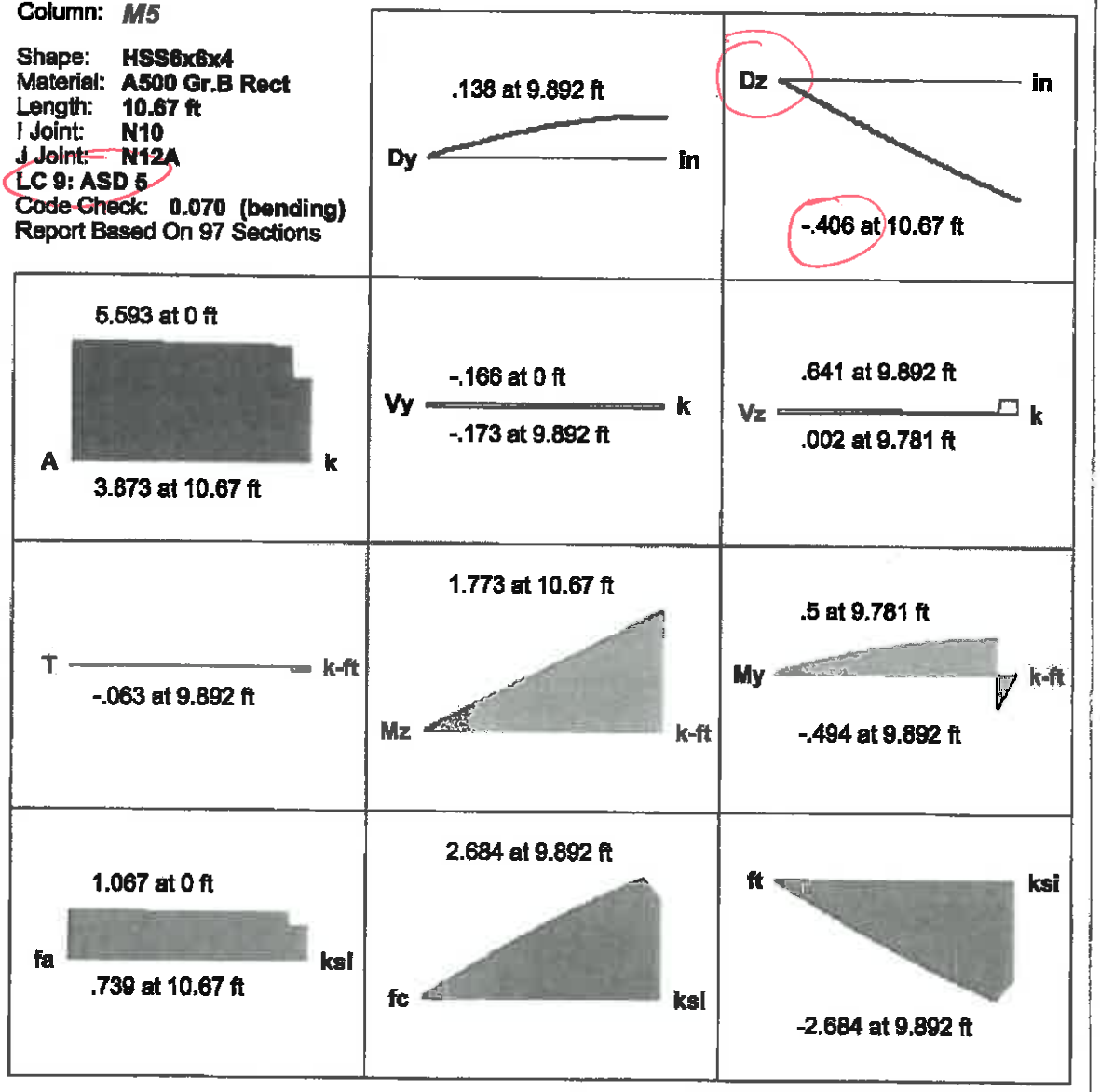

AISC 14th(360-10): LRFD Code Check

Direct Analysis Method

Max Bending Check	0.070	Max Shear Check	0.012 (z)
Location	9.781 ft	Location	9.892 ft
Equation	H1-1b	Max Defl Ratio	L/3810
Bending Flange	Compact	Compression Flange	Non-Slender
Bending Web	Compact	Compression Web	Non-Slender

Fy	46 ksi
phi*Pnc	177.248 k
phi*Pnt	216.936 k
phi*Mny	38.64 k-ft
phi*Mnz	38.64 k-ft
phi*Vny	61.361 k
phi*Vnz	61.361 k
phi*Tn	31.98 k-ft
Cb	1.67

	y-y	z-z
Lb	10.67 ft	10.67 ft
KL/r	54.806	54.806

L Comp Flange	10.67 ft
Warp Length	NC
L-torque	10.67 ft
Tau_b	1

ARCADIS

SUBJECT: TOPOK – PARKING CANOPY

JOB NO:

BY: MSL DATE: 12/23/14

CHKD: DATE:

PAGE: B-21F

SHEET: 1

COLUMN DEFLECTION – QUICKCHECK

- TRIB WIND LOAD ON C10 PURLIN = $0.6W \times \left[\left(\frac{20FT}{2} + \frac{20FT}{2}\right)_{TRIB} \times 16.0^{IN}\right] @ 10.67FT$ (33.5psf)

$\neq 0.6W \times 6^{IN}\ HSS \times 10.67FT\ @\ (10.67FT/2)$

$= (20.1\#/FT \times 20FT_{LONG\ TRIB} \times 1.33FT_{TRIB})\ @\ 10.67FT_{HIGH}\ \&$

$= 536\#\ @\ 10.67FT\ \&$ 10.1#/FT UP 10.67FT HEIGHT

$= \left[\frac{Pl^3}{3EI} = \frac{(536\#)(10.67FT \times 12^{IN}/FT)^3}{(3 \times 29E6 \times 28.6IN^4)}\right] + \left[\frac{wl^4}{8EI} = \frac{(10.1\#/FT \div 12^{IN}/FT)(10.67FT \times 12^{IN}/FT)^4}{8 \times 29E6 \times 28.6IN^4}\right]$

$= 0.452^{IN} + 0.034^{IN} \Rightarrow 0.486^{IN} \approx l/263 < l/240\ \&\ 1''$

FYI – THIS IS CONSERVATIVE B/C 2 COLUMNS IN EACH BAY, SO YOU COULD ARGUE FRAME ONLY SEE'S 1/2 OF THIS DEFLECTION ≈ 1/4"

ALSO IGNORE THE 1ST 2'-0" OF 10.67FT TALL HSS COLUMN IS A CONCRETE PIER IS CONSERVATIVE

AGM Form 30 12-01

ARCADIS

SUBJECT: TOPOK
PARKING CANOPY
JOB NO:

BY: CMW DATE: 12/3/14
CHKD: MSL DATE: 12/23/14

PAGE 822
SHEET 1

$P_N = 0.9 \times 46ksi \times 5.24in^2 \times 0.658^{(0.482)} = 177.3^k$ ✓

$P_N > \cancel{13.263^k}$ 13.303^k OK ✓

BENDING:

$M_N = 0.99 F_y S = 0.99 \times 46ksi \times 9.54in^3 = 434.5^{k\text{-}in} = 36.2^{k\text{-}ft}$ ✓ ✓ ✓

$M_N > \cancel{9.031^{k\text{-}ft}}$ 11.04 $\not> 4.344^{k\text{-}ft}$ WEAK AXIS OK ✓ → COMBINED STRESSES = $0.\cancel{305} + 0.12 + 0.$ $= \cancel{0.425}$ $0.495 < 1.0$ ✓ OK

M_{yy} M_{zz} AXIAL

BASEPLATE DESIGN:

REACTIONS:

NODE N9 → $F_x = \cancel{0.255^k}$ 0.252^k $F_y = \cancel{11.02^k}$ 13.263^k $F_z = \cancel{0.61^k}$ 0.914^k LC1 ✓

NODE N9 → $F_x = \cancel{0.169^k}$ 0.129^k $F_y = 10.253^k$ $F_z = 0.846^k$ LC2

NODE N10 → $F_x = \cancel{-0.029^k}$ -0.034^k $F_y = \cancel{-4.366^k}$ -4.629^k $F_z = 0.737^k$

FOLLOWING AISC DESIGN GUIDE 1:

$P_u = \cancel{11.02^k}$ 13.263^k ↓ ✓

$M_u = 0^k$ ✓

$N = 11^{in}$ $B = 11^{in}$ ✓

$e = 0/\cancel{11.02^k}$ 13 ✓ $= 0^{in}$

$f_{p(max)} = \phi_c (0.85 f'_c)\sqrt{A_2/A_1} = 0.65 \times 0.85 \times 4000psi \times \sqrt{1} = 2.21^{ksi}$ ✓

$q_{max} = f_{p_{max}} \times B = 2.21^{ksi} \times 11^{in} = 24.31\ k/in$ ✓

$e_{crit} = N/2 - P_u/2q_{max} = 11^{in}/2 - 11.02^k/2 \times 24.31^k/in$

$= \cancel{5.27^{in}}$ 5.23^{in}

AGM Form 30 12-01

$e < e_{crit}$, ∴ SMALL MOMENT DESIGN CONTROLS ✓

BEARING LENGTH (Y) = $N - 2e$ = 11" − 2×0 = 11"

$q = P_u / Y = 11.02^k / 11^{in} = 1.01\ k/in < q_{max}$ OK✓

MINIMUM PLATE THICKNESS:

$f_p = P_u / BY = \cancel{11.02^k}\ 13.263^k / 11^{in} \times 11^{in} = \cancel{0.091}$ KSI

$m = \frac{N - 0.95d}{2} = \frac{11^{in} - 0.95(6^{in})}{2} = 2.65^{in}$ ✓ ← CONTROLS

$t_{p(REQ'D)} = 1.49 m \sqrt{f_p / F_y} = 1.49(2.65^{in})\sqrt{\frac{\cancel{0.091}\ KSI}{36\ KSI}} = 0.199^{in}$

$n = \frac{B - \cancel{0.8}\,0.95\, b_f}{2} = \frac{11^{in} - \cancel{0.8}\,0.95(6^{in})}{2} = 3.61^{in}$ ✓

$t_{p(REQ'D)} = 1.44(3.61^{in})\sqrt{\frac{\cancel{0.091}\ KSI}{36\ KSI}} = 0.232^{in}$

$n' = 1.5''$, $X = \cancel{0.232}\ 0.032$, $\lambda = 0.18$

USE 11" × 11" × ~~1/2"~~ 3/8" BASEPLATE ✓OK

FOR ANCHORAGE, SEE HILTI PRINTOUTS ON SHT B24

LRFD → $t_{MIN} = \ell \sqrt{\frac{2P_u}{0.9 F_y B N}} = 2.65'' \sqrt{\frac{(2 \times 13.263^k)}{(0.9 \times 36\ KSI \times 11^{in} \times 11^{in})}}$ ✓

$= 0.218^{in}$

B24
MSL, 12/23/14

www.hilti.us

Profis Anchor 2.4.9

Company:	ARCADIS	Page:	1
Specifier:	CMW	Project:	Topok Parking Canopy
Address:		Sub-Project I Pos. No.:	
Phone I Fax:	I	Date:	12/18/2014
E-Mail:			

Specifier's comments: ~~LC 2~~ NODE N9
LC#1 LRFD 3

1 Input data

Anchor type and diameter:	**Hex Head ASTM F 1554 GR. 36 3/4**
Effective embedment depth:	h_{ef} = 12.000 in.
Material:	ASTM F 1554
Proof:	design method ACI 318-08 / CIP
Stand-off installation:	e_b = 0.000 in. (no stand-off); t = 0.500 in.
Anchor plate:	l_x x l_y x t = 11.000 in. x 11.000 in. x 0.500 in.; (Recommended plate thickness: not calculated)
Profile:	Square HSS (AISC); (L x W x T) = 6.000 in. x 6.000 in. x 0.250 in.
Base material:	cracked concrete, 4000, f_c' = 4000 psi; h = 36.000 in.
Reinforcement:	tension: condition B, shear: condition B; edge reinforcement: none or < No. 4 bar ← CONSERV
Seismic loads (cat. C, D, E, or F)	no

Geometry [in.] & Loading [lb, in.lb]

LRFD #3 $1.2D + 1.6L_R + 0.5W\downarrow + 0.5W\rightarrow$ ZDIR

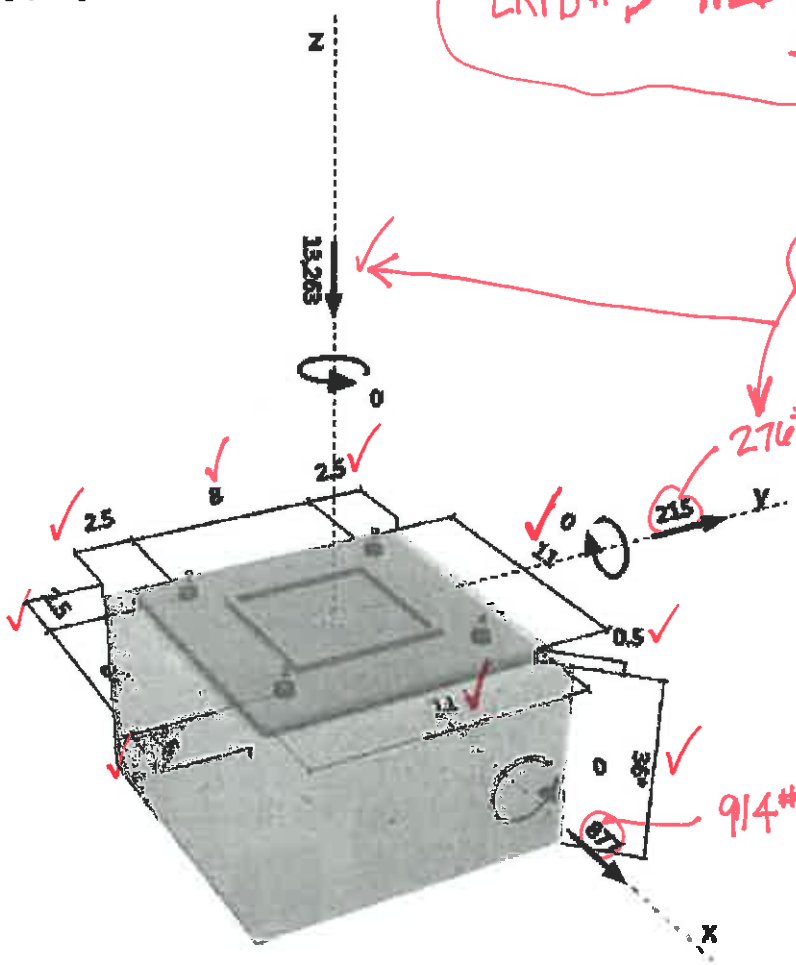

SHT B-19 LC#1-LRFD3

276#

914#

PROFIS Anchor (c) 2003-2009 Hilti AG, FL-9494 Schaan Hilti is a registered Trademark of Hilti AG, Schaan

Company:	ARCADIS	Page:	2
Specifier:	CMW	Project:	Topok Parking Canopy
Address:		Sub-Project I Pos. No.:	
Phone I Fax:	|	Date:	12/18/2014
E-Mail:			

2 Load case/Resulting anchor forces

Load case: Design loads

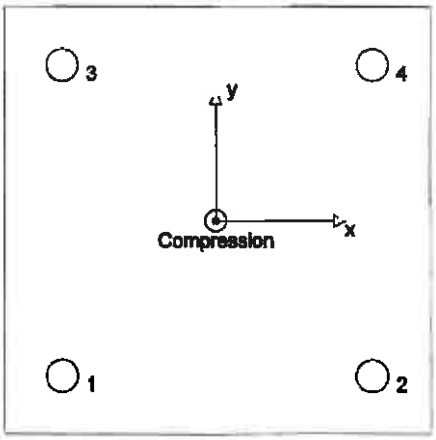

Anchor reactions [lb]
Tension force: (+Tension, -Compression)

Anchor	Tension force	Shear force	Shear force x	Shear force y
1	0	226	219	54
2	0	226	219	54
3	0	226	219	54
4	0	226	219	54

max. concrete compressive strain: 0.03 [‰]
max. concrete compressive stress: 110 [psi]
resulting tension force in (x/y)=(0.000/0.000): 0 [lb]
resulting compression force in (x/y)=(0.000/0.000): 13263 [lb]

3 Tension load

	Load N_{ua} [lb]	Capacity ϕN_n [lb]	Utilization $\beta_N = N_{ua}/\phi N_n$	Status
Steel Strength*	N/A	N/A	N/A	N/A
Pullout Strength*	N/A	N/A	N/A	N/A
Concrete Breakout Strength**	N/A	N/A	N/A	N/A
Concrete Side-Face Blowout, direction **	N/A	N/A	N/A	N/A

* anchor having the highest loading **anchor group (anchors in tension)

PROFIS Anchor (c) 2003-2009 Hilti AG, FL-9494 Schaan Hilti is a registered Trademark of Hilti AG, Schaan

Company:	ARCADIS	Page:	3
Specifier:	CMW	Project:	Topok Parking Canopy
Address:		Sub-Project I Pos. No.:	
Phone I Fax:	|	Date:	12/18/2014
E-Mail:			

4 Shear load

	Load V_{ua} [lb]	Capacity ϕV_n [lb]	Utilization $\beta_V = V_{ua}/\phi V_n$	Status
Steel Strength*	226	7555	3	OK
Steel failure (with lever arm)*	N/A	N/A	N/A	N/A
Pryout Strength**	903	21687	5	OK
Concrete edge failure in direction x+**	903	2412	38	OK

* anchor having the highest loading **anchor group (relevant anchors)

4.1 Steel Strength

$V_{sa} = n\ 0.6\ A_{se,V}\ f_{uta}$ ACI 318-08 Eq. (D-20)

$\phi\ V_{steel} \geq V_{ua}$ ACI 318-08 Eq. (D-2)

Variables

n	$A_{se,V}$ [in.^{2}]	f_{uta} [psi]
1	0.33	58000

Calculations

V_{sa} [lb]
11623

Results

V_{sa} [lb]	ϕ_{steel}	$\phi\ V_{sa}$ [lb]	V_{ua} [lb]
11623	0.650	7555	226

4.2 Pryout Strength

$V_{cpg} = k_{cp} \left[\left(\frac{A_{Nc}}{A_{Nc0}} \right) \psi_{ec,N}\ \psi_{ed,N}\ \psi_{c,N}\ \psi_{cp,N}\ N_b \right]$ ACI 318-08 Eq. (D-31)

$\phi\ V_{cpg} \geq V_{ua}$ ACI 318-08 Eq. (D-2)

A_{Nc} see ACI 318-08, Part D.5.2.1, Fig. RD.5.2.1(b)

$A_{Nc0} = 9\ h_{ef}^2$ ACI 318-08 Eq. (D-6)

$\psi_{ec,N} = \left(\frac{1}{1 + \frac{2\ e'_N}{3\ h_{ef}}} \right) \leq 1.0$ ACI 318-08 Eq. (D-9)

$\psi_{ed,N} = 0.7 + 0.3 \left(\frac{c_{a,min}}{1.5 h_{ef}} \right) \leq 1.0$ ACI 318-08 Eq. (D-11)

$\psi_{cp,N} = \text{MAX} \left(\frac{c_{a,min}}{c_{ac}}, \frac{1.5 h_{ef}}{c_{ac}} \right) \leq 1.0$ ACI 318-08 Eq. (D-13)

$N_b = k_c\ \lambda\ \sqrt{f'_c}\ h_{ef}^{1,5}$ ACI 318-08 Eq. (D-7)

Variables

k_{cp}	h_{ef} [in.]	$e_{c1,N}$ [in.]	$e_{c2,N}$ [in.]	$c_{a,min}$ [in.]
2	2.667	0.000	0.000	2.500

$\psi_{c,N}$	c_{ac} [in.]	k_c	λ	f'_c [psi]
1.000	-	24	1	4000

Calculations

A_{Nc} [in.^{2}]	A_{Nc0} [in.^{2}]	$\psi_{ec1,N}$	$\psi_{ec2,N}$	$\psi_{ed,N}$	$\psi_{cp,N}$	N_b [lb]
169.00	64.00	1.000	1.000	0.888	1.000	6610

Results

V_{cpg} [lb]	$\phi_{concrete}$	$\phi\ V_{cpg}$ [lb]	V_{ua} [lb]
30981	0.700	21687	903

PROFIS Anchor (c) 2003-2009 Hilti AG, FL-9494 Schaan Hilti is a registered Trademark of Hilti AG, Schaan

4.3 Concrete edge failure in direction x+

$V_{cbg} = \left(\frac{A_{Vc}}{A_{Vc0}}\right) \psi_{ec,V}\, \psi_{ed,V}\, \psi_{c,V}\, \psi_{h,V}\, \psi_{parallel,V}\, V_b$ — ACI 318-08 Eq. (D-22)

$\phi\, V_{cbg} \geq V_{ua}$ — ACI 318-08 Eq. (D-2)

A_{Vc} see ACI 318-08, Part D.6.2.1, Fig. RD.6.2.1(b)

$A_{Vc0} = 4.5\, c_{a1}^2$ — ACI 318-08 Eq. (D-23)

$\psi_{ec,V} = \left(\frac{1}{1 + \frac{2e_V'}{3c_{a1}}}\right) \leq 1.0$ — ACI 318-08 Eq. (D-26)

$\psi_{ed,V} = 0.7 + 0.3\left(\frac{c_{a2}}{1.5c_{a1}}\right) \leq 1.0$ — ACI 318-08 Eq. (D-28)

$\psi_{h,V} = \sqrt{\frac{1.5c_{a1}}{h_a}} \geq 1.0$ — ACI 318-08 Eq. (D-29)

$V_b = \left(7\left(\frac{l_e}{d_a}\right)^{0.2} \sqrt{d_a}\right) \lambda \sqrt{f_c'}\, c_{a1}^{1.5}$ — ACI 318-08 Eq. (D-24)

Variables

c_{a1} [in.]	c_{a2} [in.]	$e_{c,V}$ [in.]	$\psi_{c,V}$	h_a [in.]
2.500	2.500	0.000	1.000	36.000

l_e [in.]	λ	d_a [in.]	f_c' [psi]	$\psi_{parallel,V}$
6.000	1.000	0.750	4000	1.000

Calculations

A_{Vc} [in.^{2}]	A_{Vc0} [in.^{2}]	$\psi_{ec,V}$	$\psi_{ed,V}$	$\psi_{h,V}$	V_b [lb]
46.88	28.13	1.000	0.900	1.000	2297

Results

V_{cbg} [lb]	$\phi_{concrete}$	$\phi\, V_{cbg}$ [lb]	V_{ua} [lb]
3446	0.700	2412	903

5 Warnings

- Load re-distributions on the anchors due to elastic deformations of the anchor plate are not considered. The anchor plate is assumed to be sufficiently stiff, in order not to be deformed when subjected to the loading!
- Condition A applies when supplementary reinforcement is used. The Φ factor is increased for non-steel Design Strengths except Pullout Strength and Pryout strength. Condition B applies when supplementary reinforcement is not used and for Pullout Strength and Pryout Strength. Refer to your local standard.
- Checking the transfer of loads into the base material and the shear resistance are required in accordance with ACI 318 or the relevant standard!

Fastening meets the design criteria! ✓

PROFIS Anchor (c) 2003-2009 Hilti AG, FL-9494 Schaan Hilti is a registered Trademark of Hilti AG, Schaan

Company:	ARCADIS	Page:	5
Specifier:	CMW	Project:	Topok Parking Canopy
Address:		Sub-Project I Pos. No.:	
Phone I Fax:	|	Date:	12/18/2014
E-Mail:			

6 installation data

Anchor plate, steel: -
Profile: Square HSS (AISC); 6.000 x 6.000 x 0.250 in.
Hole diameter in the fixture: d_f = 0.813 in.
Plate thickness (input): 0.500 in.
Recommended plate thickness: not calculated
Cleaning: No cleaning of the drilled hole is required

Anchor type and diameter: Hex Head ASTM F 1554 GR. 36 3/4
Installation torque: -0.009 in.lb
Hole diameter in the base material: - in.
Hole depth in the base material: 12.000 in.
Minimum thickness of the base material: 14.000 in.

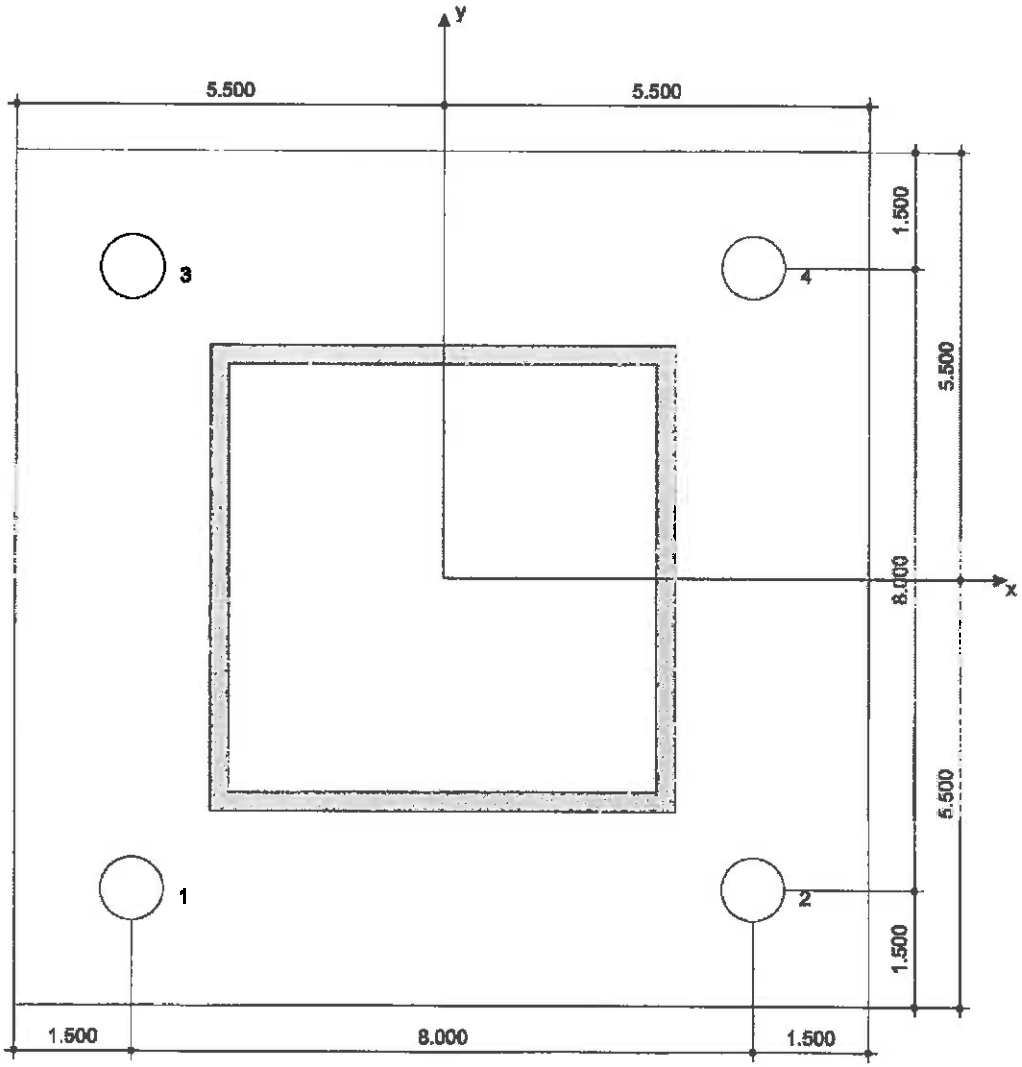

Coordinates Anchor in.

Anchor	x	y	c_{-x}	c_{+x}	c_{-y}	c_{+y}
1	-4.000	-4.000	2.500	10.500	2.500	10.500
2	4.000	-4.000	10.500	2.500	2.500	10.500
3	-4.000	4.000	2.500	10.500	10.500	2.500
4	4.000	4.000	10.500	2.500	10.500	2.500

PROFIS Anchor (c) 2003-2009 Hilti AG, FL-9494 Schaan Hilti is a registered Trademark of Hilti AG, Schaan

7 Remarks; Your Cooperation Duties

- Any and all information and data contained in the Software concern solely the use of Hilti products and are based on the principles, formulas and security regulations in accordance with Hilti's technical directions and operating, mounting and assembly instructions, etc., that must be strictly complied with by the user. All figures contained therein are average figures, and therefore use-specific tests are to be conducted prior to using the relevant Hilti product. The results of the calculations carried out by means of the Software are based essentially on the data you put in. Therefore, you bear the sole responsibility for the absence of errors, the completeness and the relevance of the data to be put in by you. Moreover, you bear sole responsibility for having the results of the calculation checked and cleared by an expert, particularly with regard to compliance with applicable norms and permits, prior to using them for your specific facility. The Software serves only as an aid to interpret norms and permits without any guarantee as to the absence of errors, the correctness and the relevance of the results or suitability for a specific application.
- You must take all necessary and reasonable steps to prevent or limit damage caused by the Software. In particular, you must arrange for the regular backup of programs and data and, if applicable, carry out the updates of the Software offered by Hilti on a regular basis. If you do not use the AutoUpdate function of the Software, you must ensure that you are using the current and thus up-to-date version of the Software in each case by carrying out manual updates via the Hilti Website. Hilti will not be liable for consequences, such as the recovery of lost or damaged data or programs, arising from a culpable breach of duty by you.

PROFIS Anchor (c) 2003-2009 Hilti AG, FL-9494 Schaan Hilti is a registered Trademark of Hilti AG, Schaan

B-25

www.hilti.us

Profis Anchor 2.4.9

Company:	ARCADIS	Page:	1
Specifier:	CMW	Project:	Topok Parking Canopy
Address:		Sub-Project I Pos. No.:	
Phone I Fax:	I	Date:	12/18/2014
E-Mail:			

Specifier's comments: LC 3 NODE N9

LC#4 – LRFD 6

1 Input data

Anchor type and diameter:	**Hex Head ASTM F 1554 GR. 36 3/4**
Effective embedment depth:	h_{ef} = 12.000 in.
Material:	ASTM F 1554
Proof:	design method ACI 318-08 / CIP
Stand-off installation:	e_b = 0.000 in. (no stand-off); t = 0.500 in.
Anchor plate:	l_x x l_y x t = 11.000 in. x 11.000 in. x 0.500 in.; (Recommended plate thickness: not calculated)
Profile:	Square HSS (AISC); (L x W x T) = 6.000 in. x 6.000 in. x 0.250 in.
Base material:	cracked concrete, 4000, f_c' = 4000 psi; h = 36.000 in.
Reinforcement:	tension: condition B, shear: condition B; edge reinforcement: none or < No. 4 bar
Seismic loads (cat. C, D, E, or F)	no

CONSERVATIVE

LRFD 6 = 0.9D + 1.0W ↓ + 1.0W → Z DIR

Geometry [in.] & Loading [lb, in.lb]

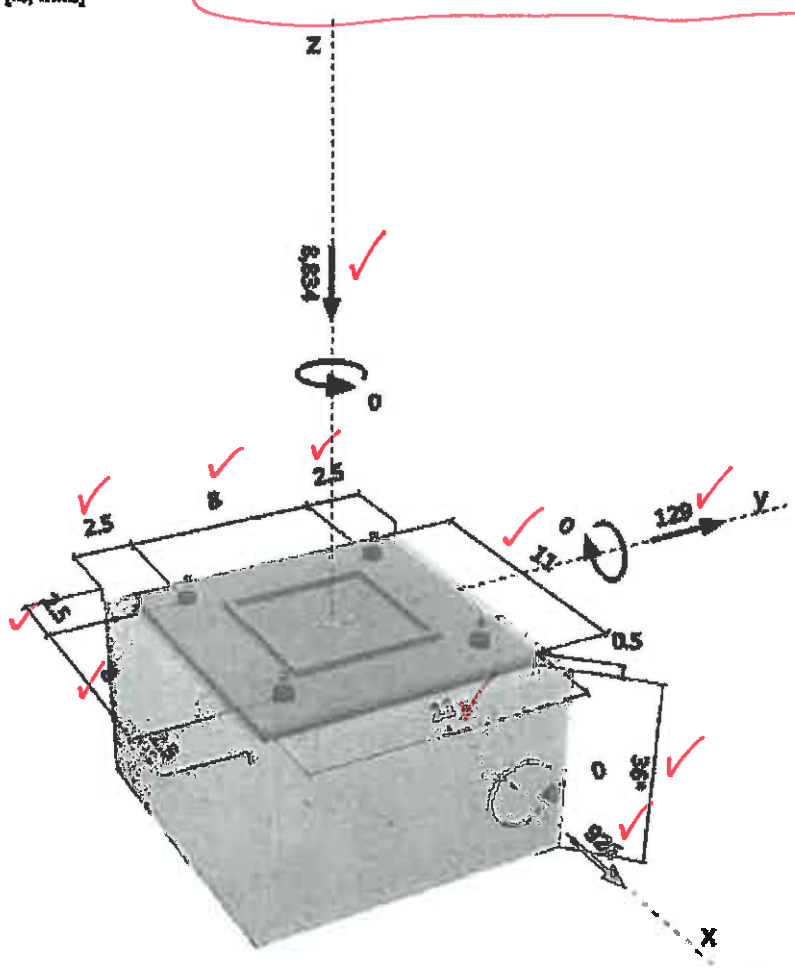

Company:	ARCADIS	Page:	2
Specifier:	CMW	Project:	Topok Parking Canopy
Address:		Sub-Project I Pos. No.:	
Phone I Fax:	|	Date:	12/18/2014
E-Mail:			

2 Load case/Resulting anchor forces

Load case: Design loads

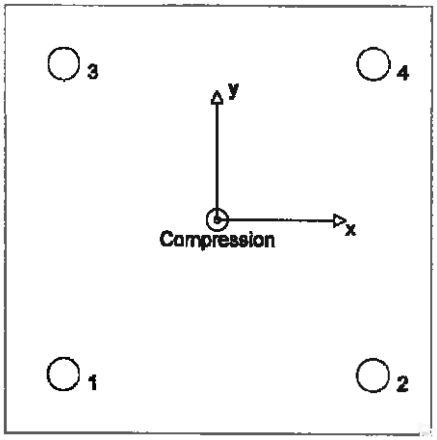

Anchor reactions [lb]
Tension force: (+Tension, -Compression)

Anchor	Tension force	Shear force	Shear force x	Shear force y
1	0	234	232	32
2	0	234	232	32
3	0	234	232	32
4	0	234	232	32

max. concrete compressive strain: 0.02 [‰]
max. concrete compressive stress: 73 [psi]
resulting tension force in (x/y)=(0.000/0.000): 0 [lb]
resulting compression force in (x/y)=(0.000/0.000): 8834 [lb]

3 Tension load

	Load N_{ua} [lb]	Capacity ϕN_n [lb]	Utilization $\beta_N = N_{ua}/\phi N_n$	Status
Steel Strength*	N/A	N/A	N/A	N/A
Pullout Strength*	N/A	N/A	N/A	N/A
Concrete Breakout Strength**	N/A	N/A	N/A	N/A
Concrete Side-Face Blowout, direction **	N/A	N/A	N/A	N/A

* anchor having the highest loading **anchor group (anchors in tension)

PROFIS Anchor (c) 2003-2009 Hilti AG, FL-9494 Schaan Hilti is a registered Trademark of Hilti AG, Schaan

4 Shear load

	Load V_{ua} [lb]	Capacity ϕV_n [lb]	Utilization $\beta_V = V_{ua}/\phi V_n$	Status
Steel Strength*	234	7555	4	OK
Steel failure (with lever arm)*	N/A	N/A	N/A	N/A
Pryout Strength**	935	21687	5	OK
Concrete edge failure in direction x+**	935	2412	39	OK

* anchor having the highest loading **anchor group (relevant anchors)

4.1 Steel Strength

$V_{sa} = n\ 0.6\ A_{se,V}\ f_{uta}$ ACI 318-08 Eq. (D-20)

$\phi V_{steel} \geq V_{ua}$ ACI 318-08 Eq. (D-2)

Variables

n	$A_{se,V}$ [in.^{2}]	f_{uta} [psi]
1	0.33	58000

Calculations

V_{sa} [lb]
11623

Results

V_{sa} [lb]	ϕ_{steel}	ϕV_{sa} [lb]	V_{ua} [lb]
11623	0.650	7555	234

4.2 Pryout Strength

$V_{cpg} = k_{cp}\left[\left(\frac{A_{Nc}}{A_{Nc0}}\right)\psi_{ec,N}\,\psi_{ed,N}\,\psi_{c,N}\,\psi_{cp,N}\,N_b\right]$ ACI 318-08 Eq. (D-31)

$\phi V_{cpg} \geq V_{ua}$ ACI 318-08 Eq. (D-2)

A_{Nc} see ACI 318-08, Part D.5.2.1, Fig. RD.5.2.1(b)

$A_{Nc0} = 9\ h_{ef}^2$ ACI 318-08 Eq. (D-6)

$\psi_{ec,N} = \left(\frac{1}{1+\frac{2\,e_N}{3\,h_{ef}}}\right) \leq 1.0$ ACI 318-08 Eq. (D-9)

$\psi_{ed,N} = 0.7 + 0.3\left(\frac{c_{a,min}}{1.5h_{ef}}\right) \leq 1.0$ ACI 318-08 Eq. (D-11)

$\psi_{cp,N} = \mathrm{MAX}\left(\frac{c_{a,min}}{c_{ac}}, \frac{1.5h_{ef}}{c_{ac}}\right) \leq 1.0$ ACI 318-08 Eq. (D-13)

$N_b = k_c\,\lambda\,\sqrt{f'_c}\,h_{ef}^{1.5}$ ACI 318-08 Eq. (D-7)

Variables

k_{cp}	h_{ef} [in.]	$e_{c1,N}$ [in.]	$e_{c2,N}$ [in.]	$c_{a,min}$ [in.]
2	2.667	0.000	0.000	2.500

$\psi_{c,N}$	c_{ac} [in.]	k_c	λ	f'_c [psi]
1.000	-	24	1	4000

Calculations

A_{Nc} [in.^{2}]	A_{Nc0} [in.^{2}]	$\psi_{ec1,N}$	$\psi_{ec2,N}$	$\psi_{ed,N}$	$\psi_{cp,N}$	N_b [lb]
169.00	64.00	1.000	1.000	0.888	1.000	6610

Results

V_{cpg} [lb]	$\phi_{concrete}$	ϕV_{cpg} [lb]	V_{ua} [lb]
30981	0.700	21687	935

PROFIS Anchor (c) 2003-2009 Hilti AG, FL-9494 Schaan Hilti is a registered Trademark of Hilti AG, Schaan

Company:	ARCADIS	Page:	4
Specifier:	CMW	Project:	Topok Parking Canopy
Address:		Sub-Project I Pos. No.:	
Phone I Fax:	|	Date:	12/18/2014
E-Mail:			

4.3 Concrete edge failure in direction x+

$V_{cbg} = \left(\frac{A_{Vc}}{A_{Vc0}}\right) \psi_{ec,V}\, \psi_{ed,V}\, \psi_{c,V}\, \psi_{h,V}\, \psi_{parallel,V}\, V_b$ — ACI 318-08 Eq. (D-22)

$\phi V_{cbg} \geq V_{ua}$ — ACI 318-08 Eq. (D-2)

A_{Vc} see ACI 318-08, Part D.6.2.1, Fig. RD.6.2.1(b)

$A_{Vc0} = 4.5\, c_{a1}^2$ — ACI 318-08 Eq. (D-23)

$\psi_{ec,V} = \left(\frac{1}{1 + \frac{2e_V}{3c_{a1}}}\right) \leq 1.0$ — ACI 318-08 Eq. (D-26)

$\psi_{ed,V} = 0.7 + 0.3\left(\frac{c_{a2}}{1.5c_{a1}}\right) \leq 1.0$ — ACI 318-08 Eq. (D-28)

$\psi_{h,V} = \sqrt{\frac{1.5c_{a1}}{h_a}} \geq 1.0$ — ACI 318-08 Eq. (D-29)

$V_b = \left(7\left(\frac{l_e}{d_a}\right)^{0.2} \sqrt{d_a}\right) \lambda \sqrt{f'_c}\, c_{a1}^{1.5}$ — ACI 318-08 Eq. (D-24)

Variables

c_{a1} [in.]	c_{a2} [in.]	e_{cV} [in.]	$\psi_{c,V}$	h_a [in.]
2.500	2.500	0.000	1.000	36.000

l_e [in.]	λ	d_a [in.]	f'_c [psi]	$\psi_{parallel,V}$
6.000	1.000	0.750	4000	1.000

Calculations

A_{Vc} [in.^{2}]	A_{Vc0} [in.^{2}]	$\psi_{ec,V}$	$\psi_{ed,V}$	$\psi_{h,V}$	V_b [lb]
46.88	28.13	1.000	0.900	1.000	2297

Results

V_{cbg} [lb]	$\phi_{concrete}$	ϕV_{cbg} [lb]	V_{ua} [lb]
3448	0.700	2412	935

5 Warnings

- Load re-distributions on the anchors due to elastic deformations of the anchor plate are not considered. The anchor plate is assumed to be sufficiently stiff, in order not to be deformed when subjected to the loading!
- Condition A applies when supplementary reinforcement is used. The Φ factor is increased for non-steel Design Strengths except Pullout Strength and Pryout strength. Condition B applies when supplementary reinforcement is not used and for Pullout Strength and Pryout Strength. Refer to your local standard.
- Checking the transfer of loads into the base material and the shear resistance are required in accordance with ACI 318 or the relevant standard!

Fastening meets the design criteria! ✓

PROFIS Anchor (c) 2003-2009 Hilti AG, FL-9494 Schaan Hilti is a registered Trademark of Hilti AG, Schaan

Company:	ARCADIS	Page:	5
Specifier:	CMW	Project:	Topok Parking Canopy
Address:		Sub-Project I Pos. No.:	
Phone I Fax:	|	Date:	12/18/2014
E-Mail:			

6 Installation data

Anchor plate, steel: -
Profile: Square HSS (AISC); 6.000 x 6.000 x 0.250 in.
Hole diameter in the fixture: d_f = 0.813 in.
Plate thickness (input): 0.500 in.
Recommended plate thickness: not calculated
Cleaning: No cleaning of the drilled hole is required

Anchor type and diameter: Hex Head ASTM F 1554 GR. 36 3/4
Installation torque: -0.009 in.lb
Hole diameter in the base material: - in.
Hole depth in the base material: 12.000 in.
Minimum thickness of the base material: 14.000 in.

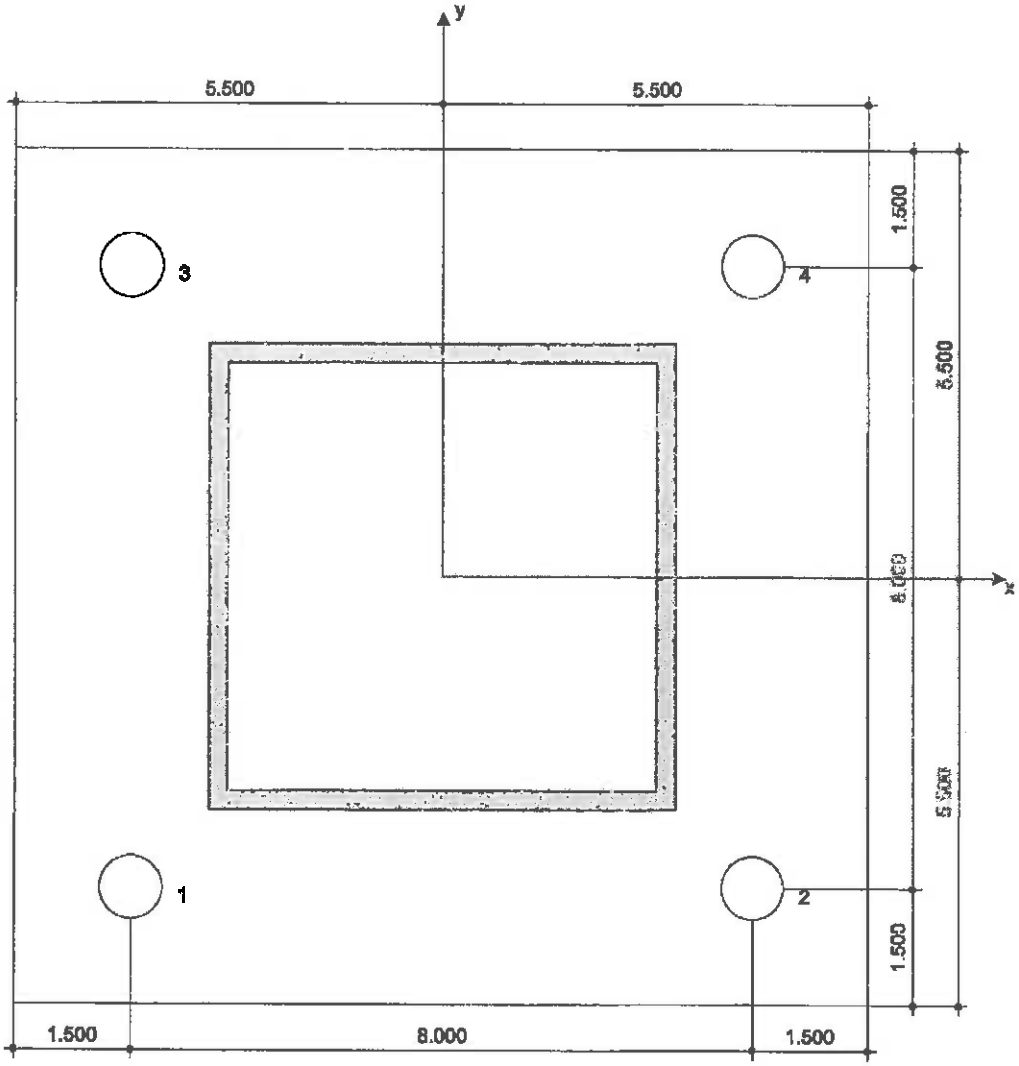

Coordinates Anchor in.

Anchor	x	y	c_{-x}	c_{+x}	c_{-y}	c_{+y}
1	-4.000	-4.000	2.500	10.500	2.500	10.500
2	4.000	-4.000	10.500	2.500	2.500	10.500
3	-4.000	4.000	2.500	10.500	10.500	2.500
4	4.000	4.000	10.500	2.500	10.500	2.500

PROFIS Anchor (c) 2003-2009 Hilti AG, FL-9494 Schaan Hilti is a registered Trademark of Hilti AG, Schaan

7 Remarks; Your Cooperation Duties

- Any and all information and data contained in the Software concern solely the use of Hilti products and are based on the principles, formulas and security regulations in accordance with Hilti's technical directions and operating, mounting and assembly instructions, etc., that must be strictly complied with by the user. All figures contained therein are average figures, and therefore use-specific tests are to be conducted prior to using the relevant Hilti product. The results of the calculations carried out by means of the Software are based essentially on the data you put in. Therefore, you bear the sole responsibility for the absence of errors, the completeness and the relevance of the data to be put in by you. Moreover, you bear sole responsibility for having the results of the calculation checked and cleared by an expert, particularly with regard to compliance with applicable norms and permits, prior to using them for your specific facility. The Software serves only as an aid to interpret norms and permits without any guarantee as to the absence of errors, the correctness and the relevance of the results or suitability for a specific application.
- You must take all necessary and reasonable steps to prevent or limit damage caused by the Software. In particular, you must arrange for the regular backup of programs and data and, if applicable, carry out the updates of the Software offered by Hilti on a regular basis. If you do not use the AutoUpdate function of the Software, you must ensure that you are using the current and thus up-to-date version of the Software in each case by carrying out manual updates via the Hilti Website. Hilti will not be liable for consequences, such as the recovery of lost or damaged data or programs, arising from a culpable breach of duty by you.

PROFIS Anchor (c) 2003-2009 Hilti AG, FL-9494 Schaan Hilti is a registered Trademark of Hilti AG, Schaan

B26

Company:	ARCADIS	Page:	1
Specifier:	CMW	Project:	Topok Parking Canopy
Address:		Sub-Project I Pos. No.:	
Phone I Fax:	|	Date:	12/18/2014
E-Mail:			

Specifier's comments: LC 6 NODE N10

1 Input data

Anchor type and diameter:	Hex Head ASTM F 1554 GR. 36 3/4
Effective embedment depth:	h_{ef} = 12.000 in.
Material:	ASTM F 1554
Proof:	design method ACI 318-08 / CIP
Stand-off installation:	e_b = 0.000 in. (no stand-off); t = 0.500 in.
Anchor plate:	l_x x l_y x t = 11.000 in. x 11.000 in. x 0.500 in.; (Recommended plate thickness: not calculated)
Profile:	Square HSS (AISC); (L x W x T) = 6.000 in. x 6.000 in. x 0.250 in.
Base material:	cracked concrete, 4000, f_c' = 4000 psi; h = 36.000 in.
Reinforcement:	tension: condition B, shear: condition B; edge reinforcement: none or < No. 4 bar
Seismic loads (cat. C, D, E, or F)	no

CONSERVATIVE

LRFD 6A (Z WIND) = 0.9D$_{MIN}$ + 1.0W↑+1.0W→

Geometry [in.] & Loading [lb, in.lb]

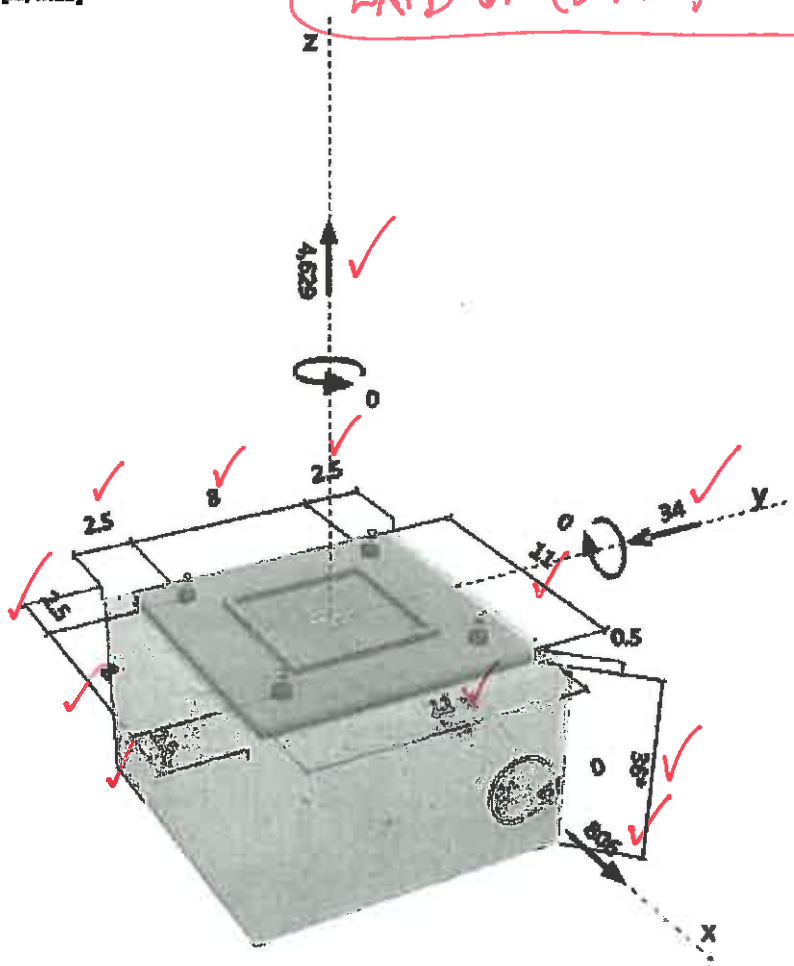

Company:	ARCADIS	Page:	2
Specifier:	CMW	Project:	Topok Parking Canopy
Address:		Sub-Project I Pos. No.:	
Phone I Fax:	I	Date:	12/18/2014
E-Mail:			

2 Load case/Resulting anchor forces

Load case: Design loads

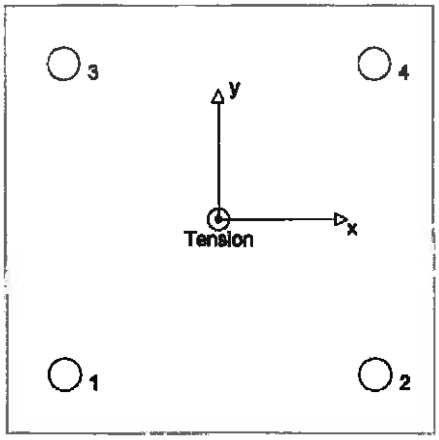

Anchor reactions [lb]
Tension force: (+Tension, -Compression)

Anchor	Tension force	Shear force	Shear force x	Shear force y
1	1157	202	202	-9
2	1157	202	202	-9
3	1157	202	202	-9
4	1157	202	202	-9

max. concrete compressive strain: - [‰]
max. concrete compressive stress: - [psi]
resulting tension force in (x/y)=(0.000/0.000): 4629 [lb]
resulting compression force in (x/y)=(0.000/0.000): 0 [lb]

3 Tension load

	Load N_{ua} [lb]	Capacity ϕN_n [lb]	Utilization $\beta_N = N_{ua}/\phi N_n$	Status
Steel Strength*	1157	14529	8	OK
Pullout Strength*	1157	14650	8	OK
Concrete Breakout Strength**	4629	10843	43	OK
Concrete Side-Face Blowout, direction x+**	2315	21959	11	OK

* anchor having the highest loading **anchor group (anchors in tension)

3.1 Steel Strength

$N_{sa} = n\, A_{se,N}\, f_{uta}$ ACI 318-08 Eq. (D-3)
$\phi\, N_{steel} \geq N_{ua}$ ACI 318-08 Eq. (D-1)

Variables

n	$A_{se,N}$ [in.^{2}]	f_{uta} [psi]
1	0.33	58000

Calculations

N_{sa} [lb]
19372

Results

N_{sa} [lb]	ϕ_{steel}	$\phi\, N_{sa}$ [lb]	N_{ua} [lb]
19372	0.750	14529	1157

PROFIS Anchor (c) 2003-2009 Hilti AG, FL-9494 Schaan Hilti is a registered Trademark of Hilti AG, Schaan

3.2 Pullout Strength

$N_{pN} = \psi_{c,p} N_p$ ACI 318-08 Eq. (D-14)

$N_p = 8 A_{brg} f'_c$ ACI 318-08 Eq. (D-15)

$\phi N_{pN} \geq N_{ua}$ ACI 318-08 Eq. (D-1)

Variables

$\psi_{c,p}$	A_{brg} [in.^{2}]	f'_c [psi]
1.000	0.65	4000

Calculations

N_p [lb]
20928

Results

N_{pn} [lb]	$\phi_{concrete}$	ϕN_{pn} [lb]	N_{ua} [lb]
20928	0.700	14650	1157

3.3 Concrete Breakout Strength

$N_{cbg} = \left(\frac{A_{Nc}}{A_{Nc0}}\right) \psi_{ec,N}\, \psi_{ed,N}\, \psi_{c,N}\, \psi_{cp,N}\, N_b$ ACI 318-08 Eq. (D-5)

$\phi N_{cbg} \geq N_{ua}$ ACI 318-08 Eq. (D-1)

A_{Nc} see ACI 318-08, Part D.5.2.1, Fig. RD.5.2.1(b)

$A_{Nc0} = 9 h_{ef}^2$ ACI 318-08 Eq. (D-6)

$\psi_{ec,N} = \left(\frac{1}{1 + \frac{2 e_N}{3 h_{ef}}}\right) \leq 1.0$ ACI 318-08 Eq. (D-9)

$\psi_{ed,N} = 0.7 + 0.3 \left(\frac{c_{a,min}}{1.5 h_{ef}}\right) \leq 1.0$ ACI 318-08 Eq. (D-11)

$\psi_{cp,N} = \text{MAX}\left(\frac{c_{a,min}}{c_{ac}}, \frac{1.5 h_{ef}}{c_{ac}}\right) \leq 1.0$ ACI 318-08 Eq. (D-13)

$N_b = k_c \lambda \sqrt{f'_c}\, h_{ef}^{1.5}$ ACI 318-08 Eq. (D-7)

Variables

h_{ef} [in.]	$e_{c1,N}$ [in.]	$e_{c2,N}$ [in.]	$c_{a,min}$ [in.]	$\psi_{c,N}$
2.667	0.000	0.000	2.500	1.000

c_{ac} [in.]	k_c	λ	f'_c [psi]
0.000	24	1	4000

Calculations

A_{Nc} [in.^{2}]	A_{Nc0} [in.^{2}]	$\psi_{ec1,N}$	$\psi_{ec2,N}$	$\psi_{ed,N}$	$\psi_{cp,N}$	N_b [lb]
169.00	64.00	1.000	1.000	0.888	1.000	6610

Results

N_{cbg} [lb]	$\phi_{concrete}$	ϕN_{cbg} [lb]	N_{ua} [lb]
15491	0.700	10843	4629

PROFIS Anchor (c) 2003-2009 Hilti AG, FL-9494 Schaan Hilti is a registered Trademark of Hilti AG, Schaan

Company:	ARCADIS	Page:	4
Specifier:	CMW	Project:	Topok Parking Canopy
Address:		Sub-Project I Pos. No.:	
Phone I Fax:		Date:	12/18/2014
E-Mail:			

3.4 Concrete Side-Face Blowout, direction x+

$N_{sb} = 160\, c_{a1} \sqrt{A_{brg}}\, \lambda \sqrt{f'_c}$ ACI 318-08 Eq. (D-17)

$N_{sbg} = \alpha_{group} N_{sb}$ ACI 318-08 Eq. (D-18)

$\phi N_{sbg} \geq N_{ua}$ ACI 318-08 Eq. (D-1)

$\alpha_{group} = \left(1 + \frac{s}{6\, c_{a1}}\right)$ see ACI 318-08, Part D.5.4.2 Eq. (D-18)

Variables

c_{a1} [in.]	c_{a2} [in.]	A_{brg} [in.^{2}]	λ	f'_c [psi]	s [in.]
2.500	2.500	0.65	1.000	4000	8.000

Calculations

α_{group}	N_{sb} [lb]
1.533	20459

Results

N_{sbg} [lb]	$\phi_{concrete}$	ϕN_{sbg} [lb]	$N_{ua,edge}$ [lb]
31370	0.700	21959	2315

PROFIS Anchor (c) 2003-2009 Hilti AG, FL-9494 Schaan Hilti is a registered Trademark of Hilti AG, Schaan

4 Shear load

	Load V_{ua} [lb]	Capacity ϕV_n [lb]	Utilization $\beta_V = V_{ua}/\phi V_n$	Status
Steel Strength*	202	7555	3	OK
Steel failure (with lever arm)*	N/A	N/A	N/A	N/A
Pryout Strength**	807	21687	4	OK
Concrete edge failure in direction x+**	807	2412	34	OK

* anchor having the highest loading **anchor group (relevant anchors)

4.1 Steel Strength

$V_{sa} = n\ 0.6\ A_{se,V}\ f_{uta}$ ACI 318-08 Eq. (D-20)

$\phi\ V_{steel} \geq V_{ua}$ ACI 318-08 Eq. (D-2)

Variables

n	$A_{se,V}$ [in.^{2}]	f_{uta} [psi]
1	0.33	58000

Calculations

V_{sa} [lb]
11623

Results

V_{sa} [lb]	ϕ_{steel}	$\phi\ V_{sa}$ [lb]	V_{ua} [lb]
11623	0.650	7555	202

4.2 Pryout Strength

$V_{cpg} = k_{cp} \left[\left(\frac{A_{Nc}}{A_{Nc0}} \right) \psi_{ec,N}\ \psi_{ed,N}\ \psi_{c,N}\ \psi_{cp,N}\ N_b \right]$ ACI 318-08 Eq. (D-31)

$\phi\ V_{cpg} \geq V_{ua}$ ACI 318-08 Eq. (D-2)

A_{Nc} see ACI 318-08, Part D.5.2.1, Fig. RD.5.2.1(b)

$A_{Nc0} = 9\ h_{ef}^2$ ACI 318-08 Eq. (D-6)

$\psi_{ec,N} = \left(\frac{1}{1 + \frac{2\ e'_N}{3\ h_{ef}}} \right) \leq 1.0$ ACI 318-08 Eq. (D-9)

$\psi_{ed,N} = 0.7 + 0.3 \left(\frac{c_{a,min}}{1.5 h_{ef}} \right) \leq 1.0$ ACI 318-08 Eq. (D-11)

$\psi_{cp,N} = \text{MAX} \left(\frac{c_{a,min}}{c_{ac}}, \frac{1.5 h_{ef}}{c_{ac}} \right) \leq 1.0$ ACI 318-08 Eq. (D-13)

$N_b = k_c\ \lambda\ \sqrt{f'_c}\ h_{ef}^{1.5}$ ACI 318-08 Eq. (D-7)

Variables

k_{cp}	h_{ef} [in.]	$e_{c1,N}$ [in.]	$e_{c2,N}$ [in.]	$c_{a,min}$ [in.]
2	2.667	0.000	0.000	2.500

$\psi_{c,N}$	c_{ac} [in.]	k_c	λ	f'_c [psi]
1.000	-	24	1	4000

Calculations

A_{Nc} [in.^{2}]	A_{Nc0} [in.^{2}]	$\psi_{ec1,N}$	$\psi_{ec2,N}$	$\psi_{ed,N}$	$\psi_{cp,N}$	N_b [lb]
189.00	64.00	1.000	1.000	0.888	1.000	6610

Results

V_{cpg} [lb]	$\phi_{concrete}$	$\phi\ V_{cpg}$ [lb]	V_{ua} [lb]
30981	0.700	21687	807

PROFIS Anchor (c) 2003-2009 Hilti AG, FL-9494 Schaan Hilti is a registered Trademark of Hilti AG, Schaan

4.3 Concrete edge failure in direction x+

$V_{cbg} = \left(\frac{A_{Vc}}{A_{Vc0}}\right) \psi_{ec,V}\, \psi_{ed,V}\, \psi_{c,V}\, \psi_{h,V}\, \psi_{parallel,V}\, V_b$ — ACI 318-08 Eq. (D-22)

$\phi\, V_{cbg} \geq V_{ua}$ — ACI 318-08 Eq. (D-2)

A_{Vc} see ACI 318-08, Part D.6.2.1, Fig. RD.6.2.1(b)

$A_{Vc0} = 4.5\, c_{a1}^2$ — ACI 318-08 Eq. (D-23)

$\psi_{ec,V} = \left(\frac{1}{1 + \frac{2e_V}{3c_{a1}}}\right) \leq 1.0$ — ACI 318-08 Eq. (D-26)

$\psi_{ed,V} = 0.7 + 0.3\left(\frac{c_{a2}}{1.5c_{a1}}\right) \leq 1.0$ — ACI 318-08 Eq. (D-28)

$\psi_{h,V} = \sqrt{\frac{1.5c_{a1}}{h_a}} \geq 1.0$ — ACI 318-08 Eq. (D-29)

$V_b = \left(7\left(\frac{l_e}{d_a}\right)^{0.2} \sqrt{d_a}\right) \lambda \sqrt{f'_c}\, c_{a1}^{1.5}$ — ACI 318-08 Eq. (D-24)

Variables

c_{a1} [in.]	c_{a2} [in.]	e_{cV} [in.]	$\psi_{c,V}$	h_a [in.]
2.500	2.500	0.000	1.000	36.000

l_e [in.]	λ	d_a [in.]	f'_c [psi]	$\psi_{parallel,V}$
6.000	1.000	0.750	4000	1.000

Calculations

A_{Vc} [in.^{2}]	A_{Vc0} [in.^{2}]	$\psi_{ec,V}$	$\psi_{ed,V}$	$\psi_{h,V}$	V_b [lb]
46.88	28.13	1.000	0.900	1.000	2297

Results

V_{cbg} [lb]	$\phi_{concrete}$	$\phi\, V_{cbg}$ [lb]	V_{ua} [lb]
3446	0.700	2412	807

5 Combined tension and shear loads

β_N	β_V	ζ	Utilization $\beta_{N,V}$ [%]	Status
0.427	0.334	5/3	41	OK

$\beta_{NV} = \beta_N^{\zeta} + \beta_V^{\zeta} <= 1$

6 Warnings

- Load re-distributions on the anchors due to elastic deformations of the anchor plate are not considered. The anchor plate is assumed to be sufficiently stiff, in order not to be deformed when subjected to the loading!
- Condition A applies when supplementary reinforcement is used. The Φ factor is increased for non-steel Design Strengths except Pullout Strength and Pryout strength. Condition B applies when supplementary reinforcement is not used and for Pullout Strength and Pryout Strength. Refer to your local standard.
- Checking the transfer of loads into the base material and the shear resistance are required in accordance with ACI 318 or the relevant standard!

Fastening meets the design criteria!

PROFIS Anchor (c) 2003-2009 Hilti AG, FL-9494 Schaan Hilti is a registered Trademark of Hilti AG, Schaan

Company:	ARCADIS	Page:	7
Specifier:	CMW	Project:	Topok Parking Canopy
Address:		Sub-Project I Pos. No.:	
Phone I Fax:	|	Date:	12/18/2014
E-Mail:			

7 Installation data

Anchor plate, steel: -
Profile: Square HSS (AISC); 6.000 x 6.000 x 0.250 in.
Hole diameter in the fixture: d_f = 0.813 in.
Plate thickness (input): 0.500 in.
Recommended plate thickness: not calculated
Cleaning: No cleaning of the drilled hole is required

Anchor type and diameter: Hex Head ASTM F 1554 GR. 36 3/4
Installation torque: -0.009 in.lb
Hole diameter in the base material: - in.
Hole depth in the base material: 12.000 in.
Minimum thickness of the base material: 14.000 in.

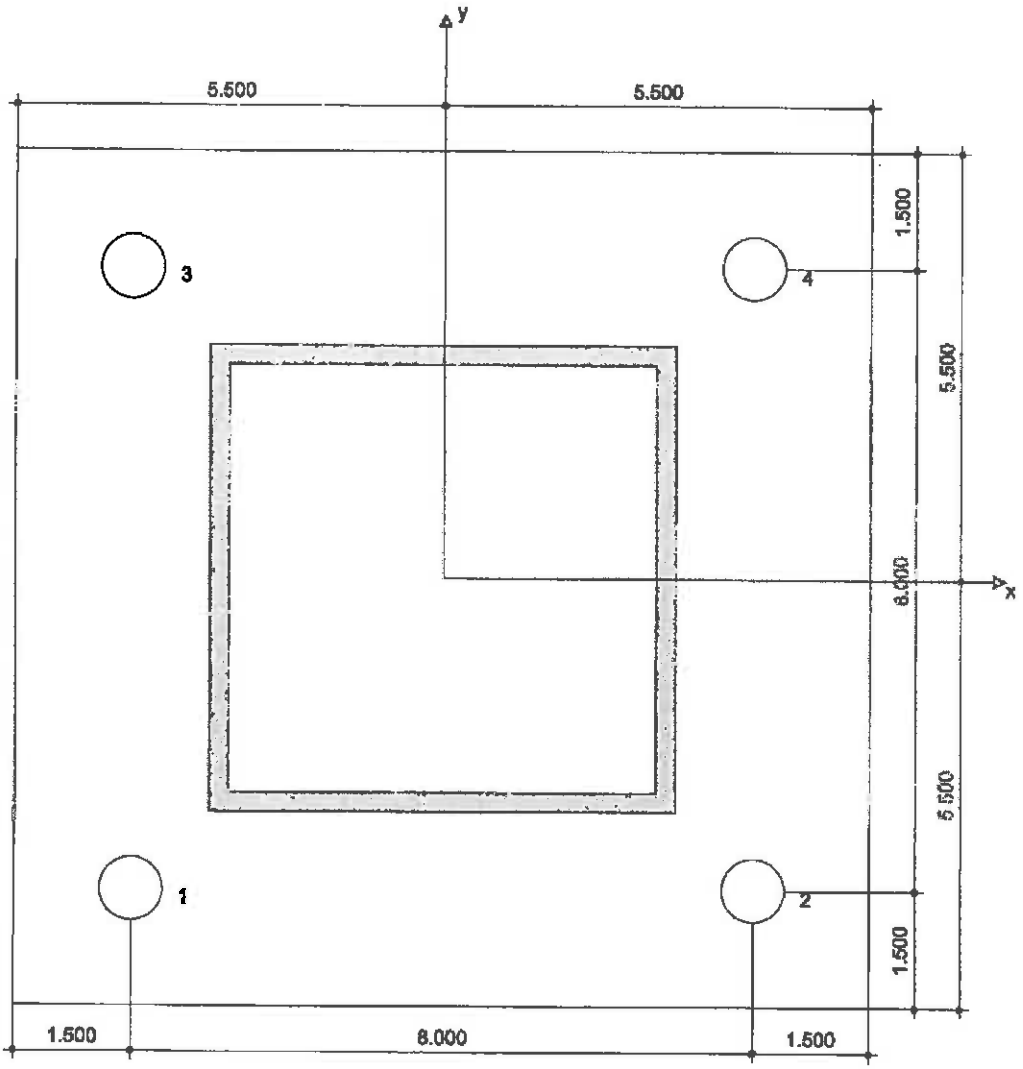

Coordinates Anchor in.

Anchor	x	y	c_{-x}	c_{+x}	c_{-y}	c_{+y}
1	-4.000	-4.000	2.500	10.500	2.500	10.500
2	4.000	-4.000	10.500	2.500	2.500	10.500
3	-4.000	4.000	2.500	10.500	10.500	2.500
4	4.000	4.000	10.500	2.500	10.500	2.500

PROFIS Anchor (c) 2003-2009 Hilti AG, FL-9494 Schaan Hilti is a registered Trademark of Hilti AG, Schaan

8 Remarks; Your Cooperation Duties

- Any and all information and data contained in the Software concern solely the use of Hilti products and are based on the principles, formulas and security regulations in accordance with Hilti's technical directions and operating, mounting and assembly instructions, etc., that must be strictly complied with by the user. All figures contained therein are average figures, and therefore use-specific tests are to be conducted prior to using the relevant Hilti product. The results of the calculations carried out by means of the Software are based essentially on the data you put in. Therefore, you bear the sole responsibility for the absence of errors, the completeness and the relevance of the data to be put in by you. Moreover, you bear sole responsibility for having the results of the calculation checked and cleared by an expert, particularly with regard to compliance with applicable norms and permits, prior to using them for your specific facility. The Software serves only as an aid to interpret norms and permits without any guarantee as to the absence of errors, the correctness and the relevance of the results or suitability for a specific application.
- You must take all necessary and reasonable steps to prevent or limit damage caused by the Software. In particular, you must arrange for the regular backup of programs and data and, if applicable, carry out the updates of the Software offered by Hilti on a regular basis. If you do not use the AutoUpdate function of the Software, you must ensure that you are using the current and thus up-to-date version of the Software in each case by carrying out manual updates via the Hilti Website. Hilti will not be liable for consequences, such as the recovery of lost or damaged data or programs, arising from a culpable breach of duty by you.

PROFIS Anchor (c) 2003-2009 Hilti AG, FL-9494 Schaan Hilti is a registered Trademark of Hilti AG, Schaan

ARCADIS

SUBJECT: TOPOK
PARKING CANOPY
JOB NO:

BY: CMW DATE: 12/3/14
CHKD: MSL DATE: 12/23/14

PAGE B-27
SHEET 1

→ SEE B22 FOR REACTIONS @ T/PIER

FOUNDATION DESIGN:

LOADS @ T/PIER = $F_x = \cancel{0.285}^{K}$ 0.252K $F_y = \cancel{2.412}^{K}\downarrow$ 13.263K $F_y = \cancel{2.55}^{K}\uparrow$ $-4.629^{K}\uparrow$

$F_z = \cancel{0.461}^{K}$ 0.914K

(CONSERVATIVE 3'-1 3/8")

PIER DESIGN:

$F_{LATERAL} = \sqrt{\cancel{215}^{\#2} + \cancel{918}^{\#2}} = \cancel{874.8}^{\#}$ 948#

252# 914#

$M_u = \cancel{875}^{\#}$ 948 $\times$ $\cancel{92.5}^{\circ}$ $3.75^{FT} = \cancel{3.3}^{K\text{-}FT}$ 3.56 K-FT

$T_c = 60\,KSI \times 6 \times 0.44\,in^2 \times 0.9$
$= \cancel{158}^{K}$ 142.6K $> 4.\cancel{366}^{K}\uparrow$ 4.629 ✓OK

$A_{PIER} = (\pi \times (18'')^2)/4 = 254.5\,in^2$ ✓

PER ACI 318-08,

$$A_{s_{MIN}} = \frac{3\sqrt{f'_c}}{f_y} \times b_w d \qquad \text{(Eq 10-3)}$$

$d_{AVG} = 12'1\tfrac{1}{8}'' + 3/4''/2 = 13.7''$

$= \frac{3\sqrt{4000\,PSI}}{60{,}000\,PSI} \times 12'' \times 13.7''$ = 0.52 in² (3 BARS)
= 0.18 in²/BAR (#4)

10.9.1 – $A_{ST_{MIN}} = 0.01 A_g = 0.01 \times 254.5\,in^2 = 2.54\,in^2$ ✓

6 BARS ~ USE 6 #6 BARS VERTICALLY
($A_s = 2.65\,in^2/ft$) ✓OK

ACI 10.9.1 CONTROLS MINIMUM STEEL

$$M_u/\phi b d^2 = \frac{\cancel{3.3}^{K\text{-}FT}\ 3.56\ (12{,}000^{\#\text{-}IN}/K\text{-}FT)}{0.9 \times 12^{IN} \times (13.7\,in)^2} = \cancel{19.5}\ 21.1 \rightarrow \rho = 0.00036$$

EQUIVALENT TO 18"Ø 15.1 IN TO WORST CASE BAR $A_{s_{REQ'D}} = 4/3\,\rho b d = 0.08\,in^2/ft$

BY INSPECTION, REQ'D A_{ST} IS MUCH LESS THAN CODE REQUIRED MINIMUM.

USE (6) #6 BARS HOOKED IN FOOTING

3#6 ($A_s = 1.32\,in^2/ft$) >> ✓OK

AGM Form 30 12-01

DESIGN OF TIES:

7.10.5.1 ~ #6 BAR → #3 TIE ✓

7.10.5.2 ~
- 16 d_b = 16 × 0.750in = 12in ✓ ← CONTROLS
- 48 $d_{b_{TIE}}$ = 48 × 0.375in = 18in ✓
- LEAST DIM = 18in ✓

USE #3 TIES @ 12" c/c w/ (3) #3 TIES @ TOP OF PIER ✓

FOOTING DESIGN:

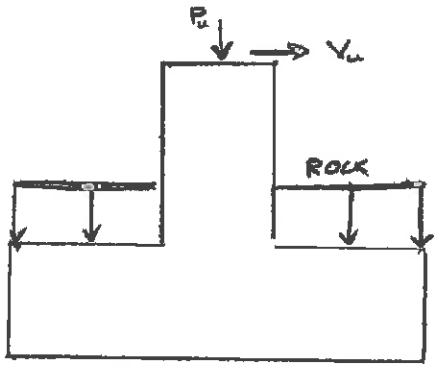

W_T PIER = 0.150KCF × 3ft × $\left(\frac{\pi \times 1.5^2}{4}\right)$ ✓ ✓

= 795# ✓

W_T FOOTING = 0.150KCF × 4ft × 4ft × 1.5ft

= 3600# ✓

GRAVEL = 0.107KCF × 1ft × (16SF − 1.78SF)

= 1.53K ✓

(0.795K + 3.6K + 1.53K)

= 5.925K ✓

SLIDING:

F_S = V_u = ~~1K~~ 0.622K ✓

F_{S_R} = 0.3 × (5.925K + ~~7.12K~~ 6.82K) = ~~3.92K~~ 3.82K > F_S ✓ OK

$FoS_{SLIDING}$ = ~~3.92K~~ 3.82K / 1.00K = ~~3.91~~ 6.18 > 1.5 OK ✓

Company :
Designer :
Job Number :

Dec 18, 2014
2:56 PM
Checked By:_____

ASD LOAD COMBINATIONS

Joint Reactions (By Combination)

	LC	Joint Label	X [k]	Y [k]	Z [k]	MX [k-ft]	MY [k-ft]	MZ [k-ft]
1	8	N6	.034	6.152	-.257	0	0	0
2	8	N5	.034	6.152	.257	0	0	0
3	8	N10	.16	7.28	-.332	0	0	0
4	8	N9	.16	7.28	.332	0	0	0
5	8	N14	-.193	2.93	-.123	0	0	0
6	8	N13	-.193	2.93	.123	0	0	0
7	8	Totals:	0	32.724	0			
8	8	COG (ft):	X: 24.072	Y: 10.47	Z: 6			
9	9	N6	.041	4.73	.124	0	0	0
10	9	N5	.009	5.816	.531	0	0	0
11	9	N10	.159	5.593	.083	0	0	0
12	9	N9	.113	6.821	.622	0	0	0
13	9	N14	-.141	2.195	.114	0	0	0
14	9	N13	-.182	2.856	.289	0	0	0
15	9	Totals:	0	28.011	1.763			
16	9	COG (ft):	X: 24.085	Y: 10.436	Z: 6			
17	10	N6	-.011	-1.636	.406	0	0	0
18	10	N5	-.043	-.611	.248	0	0	0
19	10	N10	-.005	-2.22	.464	0	0	0
20	10	N9	-.05	-1.069	.243	0	0	0
21	10	N14	.074	-.746	.246	0	0	0
22	10	N13	.035	-.105	.155	0	0	0
23	10	Totals:	0	-6.386	1.763			
24	10	COG (ft):	X: 23.629	Y: 11.696	Z: 6			
25	11	N6	.052	6.691	-.042	0	0	0
26	11	N5	.028	7.52	.534	0	0	0
27	11	N10	.2	7.983	-.118	0	0	0
28	11	N9	.166	8.923	.646	0	0	0
29	11	N14	-.208	3.118	.021	0	0	0
30	11	N13	-.238	3.618	.281	0	0	0
31	11	Totals:	0	37.853	1.322			
32	11	COG (ft):	X: 24.063	Y: 10.497	Z: 6			
33	12	N6	.01	1.484	.188	0	0	0
34	12	N5	-.014	2.274	.303	0	0	0
35	12	N10	.067	1.596	.194	0	0	0
36	12	N9	.033	2.486	.336	0	0	0
37	12	N14	-.034	.718	.129	0	0	0
38	12	N13	-.063	1.205	.172	0	0	0
39	12	Totals:	0	9.764	1.322			
40	12	COG (ft):	X: 24.243	Y: 9.999	Z: 6			
41	13	N6	.038	3.563	.17	0	0	0
42	13	N5	.006	4.639	.485	0	0	0
43	13	N10	.128	4.27	.139	0	0	0
44	13	N9	.083	5.485	.566	0	0	0
45	13	N14	-.108	1.619	.136	0	0	0
46	13	N13	-.148	2.276	.266	0	0	0
47	13	Totals:	0	21.852	1.763			
48	13	COG (ft):	X: 24.065	Y: 10.49	Z: 6			
49	14	N6	-.008	-2.123	.422	0	0	0
50	14	N5	-.04	-1.102	.232	0	0	0
51	14	N10	-.019	-2.71	.48	0	0	0
52	14	N9	-.064	-1.563	.228	0	0	0
53	14	N14	.085	-1.009	.255	0	0	0
54	14	N13	.046	-.37	.146	0	0	0
55	14	Totals:	0	-8.877	1.763			
56	14	COG (ft):	X: 23.84	Y: 11.113	Z: 6			

OVERTURNING:

$\circlearrowleft M_{OT} = 1.06^{K} \times (3^{FT} + 1.5^{FT}) = 4.50^{K\text{-}FT}$ (0.622K, 2.80K·FT)

$\circlearrowright M_R = 13.05^{K} \times 2^{FT} = 26.1^{K\text{-}FT}$ (12.74K, 25.49K·FT)

$M_R > 1.5\, M_{OT}$ OK ✓

CHECK FOOTING FOR UPLIFT SCENARIO (LC6):

$P = 2.55^{K} \uparrow$ (2.71K) $\quad F_{RES} = 0.44^{K}$ (0.46)

SLIDING 2:

$F_R = 0.3 \times 7.41^{K} = 2.223^{K} > 0.44^{K}$ OK ✓ (5.925K, 1.778K)

OVERTURNING 2:

$M_{OT_2} = 0.44^{K} \times 4.5^{FT} + 2.55^{K} \times 2^{FT} = 7.08^{K\text{-}FT}$ (0.48K, 2.16K·FT)

$M_{R_2} = (5.925^{K} - 2.71^{K}) \times 2^{FT} = 8.532^{FT\text{-}K} > 7.08^{K\text{-}FT}$ OK ✓ (6.43K·FT, 2.16K·FT)

$FoS = 1.21 = 1.25$ OK ✓ (2.98 > 1.5)

BEARING PRESSURE:

$e_1 = M/Q = 4.50^{K\text{-}FT} / 13.05^{K} = 0.345^{FT}$ (2.8K, 12.95, 0.219FT)

$B/6 = 4^{FT}/6 = 0.67^{FT} > e_1$

$q_{MAX} = \frac{Q}{BL}\left(1 + 6e/B\right) = \frac{13.05^{K}}{16SF}\left(1 + \frac{6 \times 0.345^{FT}}{4^{FT}}\right) = 1238$ PSF (12.52, 1.238 KSF)

$q_{MIN} = \frac{Q}{BL}\left(1 - 6e/B\right) = \frac{13.05^{K}}{16SF}\left(1 - \frac{6 \times 0.345^{FT}}{4^{FT}}\right) = 394$ PSF (0.394 KSF)

< 1,500 PSF OK ✓

$A = 16FT^2$, $y = 2FT$, $I = \frac{bh^3}{12} = 21.33FT^4$, $q = P/A \pm My/I = 0.797KSF \pm 0.263KSF$
$= 1060psf$ OR $534psf < 1500psf$ ✓ OK

CHECK BEARING PRESSURE FOR UPLIFT CASE:

$e_2 = \frac{\cancel{7.08}\ 2.16\ \text{K-FT}}{\cancel{7.11}\ \cancel{\text{K}}\ 3.215\text{K}} = \cancel{0.99}\ 0.672\ \text{FT} > B/6 \therefore$

$q = P/A \pm My/I = 201\text{psf} \pm 202\text{psf}$
$= 403\text{psf}$ OR 0psf
$< 1500\text{psf}$ ✓OK

$q_{MAX} = \frac{4Q}{3L(B-2e)} = \frac{4 \times 7.11^K}{3 \times 4^{FT}(4^{FT} - 2 \times 0.99^{FT})} = 1173\ \text{PSF} < 1500\ \text{PSF}$ ✓OK

OR 403psf to 0psf over 3.96ft

1438 PSF OK ✓

5.625K

FOOTING REINFORCEMENT:

$M_{FOOTING} = \cancel{1250}\ 1500\ \#/\text{FT} \times 2^{FT} = \cancel{2.5}\ 2.5^{K\text{-}FT}$ ✓

$M_u/\phi bd^2 = \frac{\cancel{2.5}\ 2.5^{K\text{-}FT} \times 12^{IN}/FT \times 1000\#/K}{0.9 \times 12^{IN} \times (\cancel{15.5}\ 14.5\ IN)^2} = \cancel{11.86}\ 13.37$ ✓ ← SMALL ρ VALUE $= \rho = 0.00027$

$A_s = 4/3\rho bd = 0.06\ IN^2/FT$

PROVIDE MIN REINFORCEMENT:

$A_{ST_{MIN}} = \cancel{0.002}\ 0.0018 \times b \times \cancel{d}\ h = \cancel{0.002}\ 0.0018 \times (12^{IN}) \times (\cancel{15.5}\ 18\ IN) = \cancel{0.372}\ 0.389\ IN^2$ / 2 FACES

$= \cancel{0.186}\ 0.194\ IN^2 \rightarrow$ #4 @ $\cancel{10}$ 12 c/c EW TOP & BOTTOM
($A_s = 0.20\ IN^2/FT$) ✓OK

ARCADIS

SUBJECT: TOPOK
PARKING CANOPY
JOB NO:

BY: CMW DATE: 12/18/14
CHKD: MSL DATE: 12/24/14

PAGE B-32
SHEET 1

CONNECTION DESIGN:

C10x15.3 (BEAMS) TO COLUMN (HSS):

MOMENT CONNECTION → (2) 3/4" ϕ THRU-BOLTS TO HANDLE SHEAR; WELD TOP/BOT FLANGE OF C10 TO HSS 6x6x1/4 FOR MOMENT

CONSERVATIVELY PROVIDING (4) 3/4" ϕ BOLTS

*ALL LOADS ARE FACTORED

5.08K < 15.9K x 2 = 31.8K ✓OK

SHEAR = $\sqrt{(4.2^K)^2 + (0.014^K)^2}$ = 4.2K (NOT CUT IN HALF B/C THRU-BOLTS PICK UP LOAD FROM 2 C10x15.3)

5.07K 0.272K

SHT B19

PER AISC CHAPTER 7: (THRU-BOLTS TO HSS)

$\phi R_N = 0.75 \times 1.8 n F_y d t = 0.75 \times 1.8 \times 2 \times 36 ksi \times 0.25^{in} \times 0.75^{in}$ (46 ksi HSS A500 GR B)

$\phi R_N = 15.23^K$ > 4.2K OK✓ (23.29K, 5.08K)

TABLE 7-1 A325 (2) 3/4" ϕ = 15.9K x 2 = 31.8K ✓OK > 5.08K

M = 10.44 K-FT (11.457K) / 2 = 5.22 K-FT (5.73 K-FT) ÷ (10in/12in/ft) = 6.26K (5.73) (TENSION / COMPRESSION)

2 BEAMS

DESIGN OF WELD:

AISC 13TH ED 8-8

$\phi R_n = 0.75 \times (1.392 \times D \times L) = 0.75 \times 1.392 \times 3 \times 4^{in} = 12.53^K$ (5.73K) (CONSERVATIVE)

3/16" LONG

12.53K (16.70K) > 6.26K (5.73K) OK - PROVIDE 3/16" x 4" LONG FILLET WELD TOP BOTTOM OF C10x15.3

$\phi R_N = \phi SHEAR = 0.6 F_y A_g = 0.6(36ksi)(0.25")(0.75")(2 BOLTS) = 8.1^K > 5.08^K$

CHANNEL C10 WEB BOLT

→ FYI ACTUALLY HAVE 4 BOLTS

AGM Form 30 12-01

DIA
B33

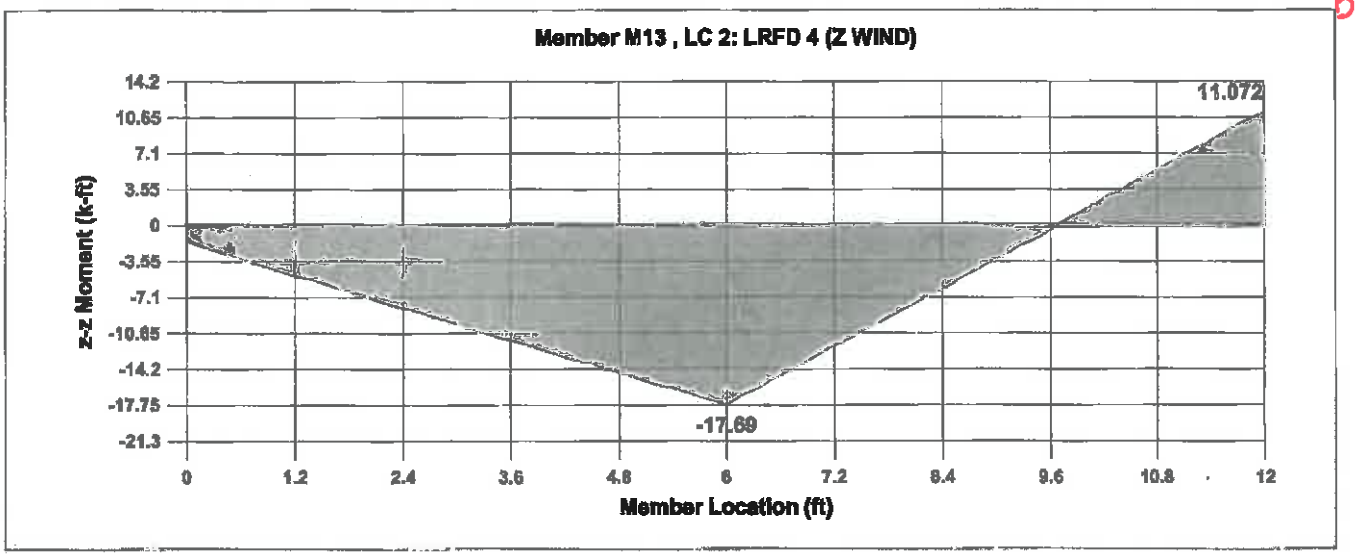
Member M13 , LC 2: LRFD 4 (Z WIND)
z-z Moment (k-ft)
14.2
10.65
7.1
3.55
0
-3.55
-7.1
-10.65
-14.2
-17.75
-21.3
11.072
-17.69
0
1.2
2.4
3.6
4.8
6
7.2
8.4
9.6
10.8
12
Member Location (ft)

DIB
B34

Member Section Forces (By Combination) FACTORED LOADS

	LC	Member Label	Sec	Axial[k]	y Shear[k]	z Shear[k]	Torque[k-ft]	y-y Mo...	z-z Mo...
1	1	M12	1	.358	1.381	.114	0	-.613	.459
2			2	.358	1.326	.114	0	-.269	-3.6
3			3	.365	-1.813	.01	0	.074	-7.501
4			4	.365	-1.867	.01	0	.02	-1.981
5			5	.365	-1.922	.01	0	.05	3.704
6	1	M13	1	.901	3.948	-.004	0	.035	2.466
7			2	.901	3.893	-.004	0	.023	-9.297
8			3	.901	-4.918	-.007	0	.019	-20.895
9			4	.887	-4.973	-.007	0	-.001	-6.045
10			5	.887	-5.028	-.007	0	-.021	8.955
11	1	M14	1	.657	2.942	-.063	0	.309	1.438
12			2	.657	2.887	-.063	0	.12	-7.306
13			3	.681	-3.815	.016	0	-.069	-15.904
14			4	.681	-3.87	.016	0	-.003	-4.377
15			5	.681	-3.925	.016	0	.044	7.315
16	2	M12	1	.468	.861	.251	0	-1.25	-1.496
17			2	.468	.806	.251	0	-.496	-3.996
18			3	.482	-1.826	-.003	0	.257	-6.343
19			4	.482	-1.881	-.003	0	.081	-.783
20			5	.482	-1.936	-.003	0	.071	4.943
21	2	M13	1	1.108	2.723	-.024	0	.103	-1.679
22			2	1.108	2.668	-.024	0	.031	-9.767
23			3	1.108	-4.734	.002	0	-.041	-17.69
24			4	1.08	-4.789	.002	0	-.017	-3.378
25			5	1.08	-4.844	.002	0	-.011	11.072
26	2	M14	1	.797	1.936	-.139	0	.633	-2.164
27			2	.797	1.881	-.139	0	.215	-7.888
28			3	.845	-3.761	.046	0	-.202	-13.486
29			4	.845	-3.815	.046	0	-.03	-2.122
30			5	.845	-3.87	.046	0	.106	9.406
31	3	M12	1	.175	1.405	-.051	0	.084	1.791
32			2	.175	1.351	-.051	0	-.071	-2.343
33			3	.175	-1.296	.051	0	-.225	-6.312
34			4	.175	-1.351	.051	0	-.071	-2.343
35			5	.175	-1.405	.051	0	.084	1.791
36	3	M13	1	.505	3.784	-.032	0	.076	4.89
37			2	.505	3.729	-.032	0	-.019	-6.378
38			3	.505	-3.674	.032	0	-.113	-17.482
39			4	.505	-3.729	.032	0	-.019	-6.378
40			5	.505	-3.784	.032	0	.076	4.89
41	3	M14	1	.339	2.867	-.045	0	.134	3.715
42			2	.339	2.812	-.045	0	0	-4.803
43			3	.339	2.757	-.045	0	-.133	-13.158
44			4	.339	-2.812	.045	0	0	-4.803
45			5	.339	-2.867	.045	0	.134	3.715
46	4	M12	1	.418	.48	.255	0	-1.252	-1.952
47			2	.418	.438	.255	0	-.487	-3.329
48			3	.431	-1.459	-.009	0	.277	-4.593
49			4	.431	-1.501	-.009	0	.089	-.153
50			5	.431	-1.542	-.009	0	.062	4.41
51	4	M13	1	.969	1.704	-.027	0	.11	-2.866
52			2	.969	1.663	-.027	0	.028	-7.917
53			3	.969	-3.688	.005	0	-.054	-12.844
54			4	.941	-3.729	.005	0	-.02	-1.693
55			5	.941	-3.77	.005	0	-.005	9.555
56	4	M14	1	.693	1.154	-.141	0	.634	-3.065

Member Section Forces (By Combination) (Continued)

	LC	Member Label	Sec	Axial[k]	y Shear[k]	z Shear[k]	Torque[k-ft]	y-y Mo...	z-z Mo...
57			2	.693	1.113	-.141	0	.21	-6.467
58			3	.741	-2.961	.049	0	-.213	-9.783
59			4	.741	-3.003	.049	0	-.035	-.837
60			5	.741	-3.044	.049	0	.112	8.232
61	5	M12	1	.125	1.018	-.047	0	.078	1.297
62			2	.125	.977	-.047	0	-.062	-1.695
63			3	.125	-.936	.047	0	-.203	-4.563
64			4	.125	-.977	.047	0	-.062	-1.695
65			5	.125	-1.018	.047	0	.078	1.297
66	5	M13	1	.365	2.737	-.035	0	.082	3.538
67			2	.365	2.696	-.035	0	-.022	-4.611
68			3	.365	-2.655	.035	0	-.126	-12.637
69			4	.365	-2.696	.035	0	-.022	-4.611
70			5	.365	-2.737	.035	0	.082	3.538
71	5	M14	1	.235	2.065	-.047	0	.137	2.68
72			2	.235	2.023	-.047	0	-.004	-3.452
73			3	.235	1.982	-.047	0	-.145	-9.461
74			4	.235	-2.023	.047	0	-.004	-3.452
75			5	.235	-2.065	.047	0	.137	2.68
76	6	M12	1	.224	-.965	.272	0	-1.264	-3.734
77			2	.224	-1.006	.272	0	-.449	-.778
78			3	.237	-1.047	.272	0	.366	2.302
79			4	.237	-.011	-.032	0	.123	2.262
80			5	.237	-.052	-.032	0	.026	2.357
81	6	M13	1	.409	-2.378	-.04	0	.138	-7.758
82			2	.409	-2.419	-.04	0	.017	-.562
83			3	.409	-2.46	-.04	0	-.104	6.777
84			4	.384	.541	.016	0	-.032	5.092
85			5	.384	.5	.016	0	.017	3.529
86	6	M14	1	.287	-1.878	-.151	0	.642	-6.672
87			2	.287	-1.919	-.151	0	.189	-.976
88			3	.334	-1.961	-.151	0	-.263	4.845
89			4	.334	.185	.063	0	-.053	4.189
90			5	.334	.143	.063	0	.135	3.697
91	7	M12	1	-.069	-.448	-.026	0	.053	-.62
92			2	-.069	-.49	-.026	0	-.026	.787
93			3	-.069	.531	.026	0	-.105	2.318
94			4	-.069	.49	.026	0	-.026	.787
95			5	-.069	.448	.026	0	.053	-.62
96	7	M13	1	-.194	-1.439	-.047	0	.107	-1.921
97			2	-.194	-1.48	-.047	0	-.033	2.457
98			3	-.194	1.521	.047	0	-.173	6.959
99			4	-.194	1.48	.047	0	-.033	2.457
100			5	-.194	1.439	.047	0	.107	-1.921
101	7	M14	1	-.171	-1.041	-.059	0	.153	-1.386
102			2	-.171	-1.082	-.059	0	-.024	1.798
103			3	-.171	-1.123	-.059	0	-.2	5.105
104			4	-.171	1.082	.059	0	-.024	1.798
105			5	-.171	1.041	.059	0	.153	-1.386

ARCADIS

SUBJECT: TOPOK
PARKING CANOPY
JOB NO:

BY: CMW DATE: 12/4/14
CHKD: MSL DATE: 12/24/14

PAGE B35 ~~D2~~
SHEET 1

CONNECTION OF C10x15.3 PURLIN TO C10x15.3 BEAM:

SHEAR = ~~325#~~ 894# TENSION = ~~2286#~~ 369#/FT × 20FT C/C TRIB = 7380# FACT (LRFD)

1.0W = 44.7#/FT × 20FT C/C TRIB = 894#

ϕR_N = ~~0.75~~ 0.6 × ~~1.0~~ × 2 × 36KSI × 0.25 × 0.5" = ~~12.15K~~ 5.4K > ~~0.825K~~ 894# OK ✓

C10 WEB SHEAR → TABLE 7-1

TABLE 7-1 = 7.03K × 2 (2) 1/2" ϕ BOLTS = 14.06K ✓

ϕR_T = 0.9 × 36KSI × 2 × 0.20 in² = 12.96K > ~~2.29K~~ 7.38# OK ✓

TABLE 7-2 ~ (2) 1/2" ϕ BOLTS = 13.25K >

✓ OK USE (2) - 1/2" ϕ BOLTS W/ L3x3x1/4" CLIP ANGLE
(1/2" ϕ BOLTS USED FOR CLEARANCE / EDGE REQUIREMENTS) ✓

CONNECTION OF ~~ROOF~~ PURLIN TO COLUMN:

REACTION = 4.664 + 3.891 (HSS)

REACTION = 0.529K + 0.482K

SHEAR = $\sqrt{(\cancel{4.16K} + 0.\cancel{527K})^2 + (\cancel{1.07K} + \cancel{0.183K})^2}$ = ~~4.28K~~ ~~1.066K~~ 8.56K 1.011 × 2 8.62K

(2) - 3/4" BOLTS · SC - 22.1K > ~~4.28K~~ OK ✓

(CONSERVATIVE) PROVIDE ~~(2)~~ (4) - 3/4" DIA

→ CONNECTION HSS = 46.5K (23.29K × 2 (B32))
C10 WEB = 16.2K (8.1K (B32) × 2)
> 8.62K ✓ OK

T = M/y ~~14.938 FT-K~~ 4.4K-FT ÷ (10in / 12in/FT) = ~~17.93K~~ 5.28K ✓

ϕR_N = ~~0.75~~ × 1.392 × ~~6~~ 3 × ~~4in~~ 5in = ~~25.06K~~ ~~15.06K~~ 20.88K OK ✓

PROVIDE ~~3/8"~~ 3/16" × ~~4~~ 5" WELD

~ FYI ~ IF MAX M_{ZZ} MOMENT = 15.959 KIP-FT / (10in / 12in/FT) = 19.15K < 20.88K ✓ OK
CONSERVATIVE (NEGATIVE MOMENT FROM WORST CASE GRAVITY LOADS)

~ ALSO HAVE (4) 3/4" ϕ BOLTS → M_{CAP} = 4 L (V_{CAP}) = 116.6 K-in – BOLTS NET CAPACITY
[45.9K LRFD − (8.62K / 4 BOLTS)] 2.12 in
+ 20.88K × 10in – WELD
~~325.55 K-in~~ ≈ 27.11 KIP-FT > 15.959 ✓ OK

∴ ∴ ∴ ∴ ∴

AGM Form 30 12-01

Envelope Member Section Forces FACTORED

	Member	Sec		Axial[k]	LC	y Shear[k]	LC	z Shear[k]	LC	Torque[k...	LC	y-y Mom...	LC	z-z Mom...	LC
1	M3	1	max	10.154	1	.235	7	.691	6	0	1	0	1	0	1
2			min	-3.651	6	-.098	1	-.376	3	0	1	0	1	0	1
3		2	max	10.097	1	.19	7	.646	6	0	1	1.784	6	.261	1
4			min	-3.694	6	-.098	1	-.376	3	0	1	-1.002	3	-.566	7
5		3	max	10.04	1	.144	7	.602	6	0	1	3.449	6	.522	1
6			min	-3.736	6	-.098	1	-.376	3	0	1	-2.004	3	-1.011	7
7		4	max	9.983	1	.099	7	.557	6	0	1	4.994	6	.783	1
8			min	-3.779	6	-.098	1	-.376	3	0	1	-3.006	3	-1.336	7
9		5	max	6.986	1	0	7	.833	2	-.134	3	.008	2	1.097	2
10			min	-2.035	7	-.223	2	-.027	5	-.642	6	-.002	7	-1.494	7
11	M4	1	max	11.108	1	.235	7	.952	2	0	1	0	1	0	1
12			min	-2.904	7	-.068	1	-.143	7	0	1	0	1	0	1
13		2	max	11.051	1	.19	7	.952	2	0	1	2.54	2	.183	1
14			min	-2.947	7	-.068	1	-.143	7	0	1	-.381	7	-.566	7
15		3	max	10.994	1	.144	7	.952	2	0	1	5.08	2	.365	1
16			min	-2.99	7	-.068	1	-.143	7	0	1	-.763	7	-1.011	7
17		4	max	10.937	1	.099	7	.952	2	0	1	7.621	2	.548	1
18			min	-3.033	7	-.068	1	-.143	7	0	1	-1.144	7	-1.336	7
19		5	max	6.957	1	.004	6	.052	4	.153	7	.004	6	.736	1
20			min	-2.035	7	-.082	3	.015	1	.044	1	-.005	3	-1.494	7
21	M5	1	max	12.178	1	.223	7	.783	6	0	1	0	1	0	1
22			min	-4.629	6	-.317	1	-.499	3	0	1	0	1	0	1
23		2	max	12.121	1	.223	7	.738	6	0	1	2.028	6	.847	1
24			min	-4.671	6	-.317	1	-.499	3	0	1	-1.332	3	-.595	7
25		3	max	12.064	1	.223	7	.693	6	0	1	3.937	6	1.694	1
26			min	-4.714	6	-.317	1	-.499	3	0	1	-2.665	3	-1.189	7
27		4	max	12.007	1	.223	7	.648	6	0	1	5.726	6	2.541	1
28			min	-4.757	6	-.317	1	-.499	3	0	1	-3.997	3	-1.784	7
29		5	max	8.005	1	.183	7	1.071	2	-.035	1	.004	1	3.366	1
30			min	-2.429	7	-.292	1	.004	7	-.138	6	-.001	7	-2.345	7
31	M6	1	max	13.263	1	.223	7	1.129	2	0	1	0	1	0	1
32			min	-3.697	7	-.276	1	-.195	7	0	1	0	1	0	1
33		2	max	13.206	1	.223	7	1.129	2	0	1	3.01	2	.736	1
34			min	-3.739	7	-.276	1	-.195	7	0	1	-.52	7	-.595	7
35		3	max	13.149	1	.223	7	1.129	2	0	1	6.021	2	1.472	1
36			min	-3.782	7	-.276	1	-.195	7	0	1	-1.04	7	-1.189	7
37		4	max	13.091	1	.223	7	1.129	2	0	1	9.031	2	2.208	1
38			min	-3.825	7	-.276	1	-.195	7	0	1	-1.559	7	-1.784	7
39		5	max	8.01	1	.183	7	-.004	7	.107	7	.002	6	2.917	1
40			min	-2.429	7	-.243	1	-.039	1	-.021	1	-.003	1	-2.345	7
41	M7	1	max	4.722	1	.412	3	.422	6	0	1	0	1	0	1
42			min	-1.745	6	-.145	6	-.182	3	0	1	0	1	0	1
43		2	max	4.664	1	.412	3	.377	6	0	1	1.065	6	.386	6
44			min	-1.788	6	-.145	6	-.182	3	0	1	-.486	3	-1.099	3
45		3	max	4.607	1	.412	3	.332	6	0	1	2.01	6	.772	6
46			min	-1.831	6	-.145	6	-.182	3	0	1	-.971	3	-2.197	3
47		4	max	4.55	1	.412	3	.287	6	0	1	2.836	6	1.158	6
48			min	-1.873	6	-.145	6	-.182	3	0	1	-1.457	3	-3.296	3
49		5	max	3.113	1	.489	2	.477	2	1.264	6	0	7	1.316	6
50			min	-.952	6	-.018	7	-.005	7	-.084	3	-.003	1	-4.344	3
51	M8	1	max	5.287	1	.412	3	.502	2	0	1	0	1	0	1
52			min	-1.108	7	-.081	6	-.064	7	0	1	0	1	0	1
53		2	max	5.23	1	.412	3	.502	2	0	1	1.34	2	.215	6
54			min	-1.151	7	-.081	6	-.064	7	0	1	-.169	7	-1.099	3
55		3	max	5.173	1	.412	3	.502	2	0	1	2.68	2	.43	6
56			min	-1.194	7	-.081	6	-.064	7	0	1	-.339	7	-2.197	3

Envelope Member Section Forces (Continued)

	Member	Sec		Axial[k]	LC	y Shear[k]	LC	z Shear[k]	LC	Torque[k...	LC	y-y Mom...	LC	z-z Mom...	LC
57		4	max	5.116	1	.412	3	.502	2	0	1	4.02	2	.646	6
58			min	-1 237	7	-.081	6	-.064	7	0	1	- 508	7	-3.296	3
59		5	max	3.137	1	.351	3	.006	4	.084	3	.002	1	.835	6
60			min	- 909	6	-.049	6	0	1	026	6	- 001	6	-4 344	3

ARCADIS

SUBJECT: PG&E – TOPOK
HQ – DECON PAD

JOB NO:

BY: MGL DATE: 10/7/14

CHKD: DATE:

PAGE G-1

SHEET 1

HQ – DECON PAD

- REF SHT G-2 FOR DECON PAD PROJECT REQ'S
- REF SHT G-3 & G-4 FOR DRILL RIG INFO (SIZE, AXLE LOADS & LOCATIONS) 46,000# ON 2 AXLES @ 4'-2" C/C B/W 2 AXLES
- REF SHT G-5 FOR HS-20 TRUCK LOADS & AXLE LOCATIONS & DIMENSIONS
- REF SHT D-1 THRU D-9 FOR PAD & CURB DESIGN

23,000# AXLES @ 4'-2" C/C OK

HS-20 TRAFFIC LOAD = $\frac{32{,}000\#\ \text{AXLE}}{2\ \text{WHEELS}}$ = 16K @ 3.5FT C/C

~EXISTING 8" SOG DESIGN W/ #5 @ 8" C/C EW CENTERED IS SUFFICIENT FOR LIGHTER RIG LOADS

AGM Form 30 12-01

G-1A

Lotycz, Matt

From: Baxter, Jonathan
Sent: Monday, November 10, 2014 1:16 PM
To: Lotycz, Matt
Cc: Sheu, Emily
Subject: RE: PG&E Topock CHQ Engineering Support - Decon Pad
Attachments: SOH03P01 14110711190.pdf

Thanks Matt – I think this looks good and agree with your changes reducing the containment volume and widening.

Emily – can you submit to ETIC – changing the title of the sheet to 'CHQ Decontamination Pad' instead of Decon Unloading Pad? Don't worry about the drawing number for now, we'll wait a bit before starting with those.

From: Lotycz, Matt
Sent: Friday, November 07, 2014 10:37 AM
To: Baxter, Jonathan
Subject: RE: PG&E Topock CHQ Engineering Support - Decon Pad

Jon – I have "looked into" the Decon Pad for the Topok HQ. As stated in your email below, using the 90% IRZ Unloading Pad drawing as a starting point I have marked up it up for what we need at the Decon Pad. I wanted to point out some things I changed and get your "buy-in" before you pass to EITC for drafting. Please confirm the following items listed and if you agree with my markups, please pass along to EITC (if not, let me know your thoughts and I will update my markups and send you an updated drawing markup to give to EITC next week):

1. Since the pad is only needed to wash-down the construction drill rigs (no containment volume needed), I have decreased the amount of containment volume (i.e. lessened the slope of the ramp on each side of the center trench) by almost 50% (1'-10" depth to 1'-0" depth).
2. Since this pad is being used to wash-down the construction drill rigs, I thought it would make sense to make the lane width (i.e. width between curbs on each side) wider (16'-0" instead of 12'-0") to allow for a person power-washing the drill rig at least 3'-0" of walking path on each side of drill rig (max 10ft wide).

Let me know your thoughts. Thanks and have a good weekend.

FYI – I am on a site visit next Monday and Tuesday (Nov 10th and 11th). Feel free to send me any information you have collected (via email) from your meetings with the client this past week. As of right now, I am in a holding pattern on my structural tasks until I get info from you on each of the structures needed for this HQ area.

Matt

From: Sheu, Emily
Sent: Tuesday, November 04, 2014 2:22 PM
To: Baxter, Jonathan; Lotycz, Matt
Subject: RE: PG&E Topock CHQ Engineering Support

Hi – Drill rig weight info is attached. Let me know if you need anything else!

Thanks,
Emily

G-2

Lotycz, Matt

From: Sheu, Emily
Sent: Tuesday, November 04, 2014 2:22 PM
To: Baxter, Jonathan; Lotycz, Matt
Subject: RE: PG&E Topock CHQ Engineering Support
Attachments: RE: Topock Arizona Compressor Station

Hi – Drill rig weight info is attached. Let me know if you need anything else!

Thanks,
Emily

From: Baxter, Jonathan
Sent: Tuesday, November 04, 2014 10:27 AM
To: Lotycz, Matt
Cc: Sheu, Emily
Subject: RE: PG&E Topock CHQ Engineering Support

Matt, see my answers below.

Emily - can you check with Katie Douglas or Greg Foote for drill rig weight? We compiled it at one point but I can't find it at the moment.

On Oct 30, 2014 6:58 AM, "Lotycz, Matt" <Matt.Lotycz@arcadis-us.com> wrote:
>
> Jon - Just checking to see if you have any answers on the 4 questions below on the decon pad (Tuesday, October 21, 2014 11:31 AM email) and if you have any of the information requested in my Thursday, October 09, 2014 2:22 PM email below. As of right now, I have not received any of the information I requested other than the plan view as-built of the parking canopy (which is still on hold). Just looking for an update from you. Thanks.
>
>
>
> Matt
>
>
>
> From: Lotycz, Matt
> Sent: Tuesday, October 21, 2014 11:31 AM
> To: Baxter, Jonathan
> Subject: RE: PG&E Topock CHQ Engineering Support
>
>
>
> Jon – Per your email below I can get started with the decon pad. Please answer the following 4 questions with regard to that:
>
>

>
> 1. Can we use the previous Topok MW-20 Bench unloading pad as the basis for the new decon pad?
> Yes, that can be the basis.
> 2. Is the plan view (1 long and narrow unloading pad) going to change based on the truck patterns or space availability in this HQ area?
> I don't expect it to, though the primary goal is to be able to drive in a drill rig, Decon it (pressure washer mostly) and then drive out. Rigs are up to 10' in width by 50' long.
> 3. Can you please confirm the containment volume required?
>No actual containment volume is needed.
> 4. Can you please confirm that the new decon pad will have the same truck loading (tanker load) as the MW-20 Bench unloading pad.
>I think the larger rigs weigh less than a fully loaded tanker, I will have to confirm with our geologists.
>
>
> Thanks again in advance for this information. I can provide a markup of the MW-20 Bench unloading pad to the sub once I hear from you. Thanks.
>
>
>
> Matt
>
>
>
> From: Baxter, Jonathan
> Sent: Tuesday, October 21, 2014 8:18 AM
> To: Lotycz, Matt
> Cc: Wuerl, Ben; Kirsch, Clair
> Subject: RE: PG&E Topock CHQ Engineering Support
>
>
>
> We can definitely use Toledo staff for anything that is in Revit. We do need to use our sub for as much other CAD/support as possible. We are still working with the client on the final layout and building types, I hope to have those answers in the next couple days. We should be able to proceed with the decon pad now. We need to finalize the water tank size and can then prepare the utility pads (generator, transformer, water tank).
>
>
>
> From: Lotycz, Matt
> Sent: Tuesday, October 21, 2014 6:54 AM
> To: Baxter, Jonathan
> Cc: Wuerl, Ben; Kirsch, Clair
> Subject: RE: PG&E Topock CHQ Engineering Support
>
>
>
> Jon – Please confirm that it is ok for me to use my own CAD drafters (Toledo staff – Clair Kirsch CAD Dept Manager) once my structural tasks start rolling later this month. That is how I submitted my time in my 9-26-14 email below but just wanted to confirm that was ok (I know in the past the MBE/DBE firm needed to do some drafting to meet some %'s). The reason I am asking is our Toledo drafters are slow and I would like to keep them plugged in as much as possible for the structural drafting when it begins later this month and

next. Let me know. Thanks.
>
>
>
> -Matt
>
>
>
> From: Lotycz, Matt
> Sent: Monday, October 20, 2014 12:40 PM
> To: Baxter, Jonathan (Jonathan.Baxter@arcadis-us.com)
> Cc: Wuerl, Ben
> Subject: RE: PG&E Topock CHQ Engineering Support
>
>
>
> Jon – please see email below for the items (first and last bulleted item) requested by 10-17-14 COB (last Friday) from your group. Please get me this info as I try to prepare 30% submittal drawings in early November.
>
>
>
> Since we are still waiting direction from client on whether they want us to design a parking canopy, can I assume this is not in 30% submittal? Also, if decision is not made by end of the month, this will not be in the 90% submittal in December.
>
>
>
> Keep in mind there are numerous other pieces of information needed from your group by end of the month for the other structures (see rest of bulleted item list in email below).
>
>
>
> Matt
>
>
>
> From: Lotycz, Matt
> Sent: Thursday, October 09, 2014 2:22 PM
> To: Baxter, Jonathan (Jonathan.Baxter@arcadis-us.com)
> Cc: Wuerl, Ben
> Subject: FW: PG&E Topock CHQ Engineering Support
>
>
>
> Jon –
>
>
>
> As you requested, I have added to my 9-26-14 email below with red-marks and yellow highlights for what information I need from Jon's group and when I need it by to meet 30% submittal (October 27, 2014)

deliverables (7 drawings of Crew/Shop Pre-Engineered Building and 2 drawings of Covered Parking Area) and final 90% submittal deliverable.
>
>
>
> Matt
>
>
>
> From: Lotycz, Matt
> Sent: Friday, September 26, 2014 2:21 PM
> To: Morris, Scott; Baxter, Jonathan (Jonathan.Baxter@arcadis-us.com)
> Cc: Kolodzaike, Ron (Ron.Kolodzaike@arcadis-us.com); Wuerl, Ben
> Subject: FW: PG&E Topock CHQ Engineering Support
>
>
>
> Scott and Jonathan,
>
>
>
> Once again, thanks for keeping our structural group in mind on your CA projects. I am estimating the following scope/hours/deliverables/assumptions to complete the 90% design of the PG&E Topock Construction Headquarters:
>
>
>
> Scope of Work and Estimate of Hours:
>
> Crew/Shop Pre-Engineered Building – 88 hours PSE + 68 hours ARCADIS CAD
> Covered Parking Area Structure – 84 hours PSE + 56 hours ARCADIS CAD
> Ground and Elevated Water Tank concrete pad and details – 24 hours PSE + 24 hours ARCADIS CAD
> Generator Concrete Pad Plan and Details – 6 hours PSE + 4 hours ARCADIS CAD
> Decon Unloading Pad Plan and Details – 12 hours PSE + 6 hours ARCADIS CAD
> Lab Construction Trailer & Conference Room/Consultant Construction Trailer & Office Trailer & Men's and Women's Concrete Pad Plan and Details – 32 hours PSE + 32 hours ARCADIS CAD
> ARCADIS QA/QC review by Structural Senior QA/QC reviewer (to be completed from pre-90% drawing set) – 10 hours SSE
> 30% & 90% submittals to client - 4 hours PSE + 4 hours ARCADIS CAD
> Review and respond to client 30% submittal review comments and ARCADIS Structural Senior QA/QC reviewer pre-90% submittal review – 12 hours PSE + 12 hours ARCADIS CAD
> Organize and combine structural calculations for submittal to local building code official – 2 hours PSE
>
>
>
> ü Matt Lotycz (ARCADIS Project Structural Engineer - PSE) – 264 hours @ $120/hr
>
> ü Chris Wancata (ARCADIS Structural Engineer I) or Greg Elkins (ARCADIS CAD Drafter) – 206 hours @ $90/hr
>
> ü Larry Tabat – (ARCADIS Principal Structural Engineer in White Plains, NY (MP) Office – SSE) – 10

hours @ $165/hr
>
> ü Total Structural Task Fee = $51,900
>
>
>
> Estimated Drawing Set (All sheets will be provided at 90%, with only sheets indicated 30% provided in that submittal)
>
> 1. Crew/Shop Pre-Engineered Building - Notes Sheet – 30%
>
> 2. Crew/Shop Pre-Engineered Building -Isometrics
>
> 3. Crew/Shop Pre-Engineered Building – Elevations – 30%
>
> 4. Crew/Shop Pre-Engineered Building – Elevations – 30%
>
> 5. Crew/Shop Pre-Engineered Building - Foundation Plan – 30%
>
> 6. Crew/Shop Pre-Engineered Building - Floor Plan– 30%
>
> 7. Crew/Shop Pre-Engineered Building - Typical Frame– 30%
>
> 8. Crew/Shop Pre-Engineered Building - Building Section– 30%
>
> 9. Crew/Shop Pre-Engineered Building – Building Sections and Details
>
> 10. Crew/Shop Pre-Engineered Building - Building Typical Details 1 of 2
>
> 11. Crew/Shop Pre-Engineered Building - Building Typical Details 2 of 2
>
> 12. Covered Parking Area – Foundation Plan– 30%
>
> 13. Covered Parking Area – Floor Plan
>
> 14. Covered Parking Area – Roof Framing Plan
>
> 15. Covered Parking Area – Roof Plan– 30%
>
> 16. Covered Parking Area – Sections
>
> 17. Covered Parking Area – Sections
>
> 18. Covered Parking Area – Details
>
> 19. Ground Supported Water Tank Concrete Pad Plan and Details
>
> 20. Elevated Water Tank Concrete Pad Plan and Details
>
> 21. Generator Concrete Pad Plan and Details
>

> 22. Decon Unloading Pad Plan and Details
>
> 23. Lab Construction Trailer Concrete Pad Plan and Details
>
> 24. Conference Room/Consultant Construction Trailer Concrete Pad Plan and Details
>
> 25. Office Trailer Concrete Pad Plan and Details
>
> 26. Men's and Women's Concrete Pad Plan and Details
>
>
>
> Deliverables:
>
> · &nbs

G-3

Lotycz, Matt

From: Stadeli, Robert <rstadeli@boartlongyear.com>
Sent: Wednesday, April 16, 2014 3:36 PM
To: Gonzales, James
Subject: RE: Topock Arizona Compressor Station
Attachments: 4775 .pdf

James, this is the heaviest DR Rig we may use, and the attached drawing shows the configuration for on highway use. If we are going from site to site, axle #2 is lifted and axle 5 is removed leaving just three axles with the following weights. 22,000 lbs on the single steer axle and 46,000 on the tandem drive axle

The other Dual Rotary option would be a three axle rig with the following weights
20,000 lbs on the single steer axle and 43,000 on the tandem drive axle

Let me know if you need anything more

Best regards

Robert Stadeli | Business Development/Contracts Manager | Boart Longyear Company | US Rotary
MBL: (503) 572-9396 | **Dir:** (385) 234-3820 | **Off:** (801) 973-6667 (ext 3820) | **E:** rstadeli@boartlongyear.com

---

From: Gonzales, James [mailto:James.Gonzales@arcadis-us.com]
Sent: Wednesday, April 16, 2014 9:53 AM
To: Stadeli, Robert
Subject: RE: Topock Arizona Compressor Station

Thanks Robert. Please forward the information as soon as you can.

From: Stadeli, Robert [mailto:rstadeli@boartlongyear.com]
Sent: Wednesday, April 16, 2014 8:37 AM
To: Gonzales, James
Subject: Re: Topock Arizona Compressor Station

James, I have someone working on this, hopefully will have something later today

---

Robert Stadeli | Business Development/Contracts Manager | Boart Longyear Company | US Rotary
MBL: (503) 572-9396 | **Dir:** (385) 234-3820 | **Off:** (801) 973-6667 (ext 3820) | **E:** rstadeli@boartlongyear.com

On Apr 14, 2014, at 2:25 PM, "Gonzales, James" <James.Gonzales@arcadis-us.com> wrote:

> Greetings Robert,
> I needs some information for the Boart Longyear Dual Rotary Rigs. Do you have a specification sheet for the DR-24? I believe this is the rig we discussed for the Topock drilling. We'll need to know a precise weight, if possible. Also, we would like to know the weight per axle or wheel. Is this something you can

provide us? We need this information for preliminary road design needed for the well Site locations at Topock.

Thanks,
James

From: Stadeli, Robert [mailto:rstadeli@boartlongyear.com]
Sent: Thursday, March 06, 2014 2:51 PM
To: Gonzales, James
Subject: RE: Topock Arizona Compressor Station

MBL: (503) 572-9396

Robert Stadeli | Business Development/Contracts Manager | Boart Longyear Company | US Rotary
MBL: (503) 572-9396 | **Dir:** (385) 234-3820 | **Off:** (801) 973-6667 (ext 3820) | **E:** rstadeli@boartlongyear.com

---

From: Gonzales, James [mailto:James.Gonzales@arcadis-us.com]
Sent: Thursday, March 06, 2014 3:46 PM
To: Stadeli, Robert
Subject: RE: Topock Arizona Compressor Station

What's the best number to call you on?

From: Stadeli, Robert [mailto:rstadeli@boartlongyear.com]
Sent: Wednesday, March 05, 2014 4:51 PM
To: Gonzales, James
Subject: RE: Topock Arizona Compressor Station

Sure thing I got your invite

Robert Stadeli | Business Development/Contracts Manager | **Boart Longyear Company | US Rotary**
Dir: (385) 234-3820 | **MBL:** (503) 572-9396 | **Off:** (801) 973-6667 (ext 3820) | **E:** rstadeli@boartlongyear.com

---

From: Gonzales, James [mailto:James.Gonzales@arcadis-us.com]
Sent: Wednesday, March 05, 2014 2:55 PM
To: Stadeli, Robert
Subject: RE: Topock Arizona Compressor Station

Hi Robert,
I received you messages today. Thanks for the call back!

Sorry, but I'm pretty tied up today with other projects. Can we touch base tomorrow afternoon at 3pm to discuss the Topock Project? Let me know if this works and I'll set up a meeting reminder.

Thank you!

From: Stadeli, Robert [mailto:rstadeli@boartlongyear.com]
Sent: Wednesday, February 26, 2014 7:33 AM
To: Lamb, Jason

Cc: Gonzales, James
Subject: Re: Topock Arizona Compressor Station

James, I look forward to following up with you. I have recently been trying to get an update on this project.

Sincerely

Robert
Stadeli
Mbl: 503-572-9396

On Feb 26, 2014, at 7:43 AM, "Lamb, Jason" <JLamb@boartlongyear.com> wrote:

> Yes I am actually sitting with Robert in the Slc airport and he just filled me in on the project. I have copied him on the email and he will be in touch with you hopefully later today when we land. Thank you for reaching out.
>
> Jason Lamb
> Contracts Manager
> Boart Longyear
> (385) 234-3809 office
>
> On Feb 25, 2014, at 3:32 PM, "Gonzales, James" <James.Gonzales@arcadis-us.com> wrote:
>
>> Greetings Jason,
>>
>> I was given your name by Greg Zekoff in regards to drilling project that he and Robert Stadeli put together for Greg Foote of ARCADIS. The project involved sonic and dual rotary drilling and well installation at the compressor station in Topock Arizona. Greg Z. stated that you may be able to put me in contact with Robert Stadeli. We are starting to refine the costs and approach for this project, therefore, I have questions regarding the Dual Rotary portion. In addition, I wanted to stay in contact and keep refining the costs for eventual implementation possibly towards the end of this year. Are you familiar with this project and/or can you put me in touch with Robert?
>> Regards,
>> **James Gonzales, P.G.** | Project Geologist | james.gonzales@arcadis-us.com
>> ARCADIS U.S., Inc. | 320 Commerce, Suite 200 | Irvine, CA, 92602
>> T. 714.508.2652 | M. 714.702.6243 | F. 714.730.9345
>> www.arcadis-us.com
>> Professional Geologist CA # 8918
>> Certified Hydrogeologist CA # 984
>> ARCADIS, Imagine the result
>> Please consider the environment before printing this email.
>>
>> ---
>>
>> NOTICE: This e-mail and any files transmitted with it are the property of ARCADIS U.S., Inc. and its affiliates. All rights, including without limitation copyright, are reserved. The proprietary information contained

G-4

Unit # 4775, 2003 Mack **Vin #** 1M2AD64C23MOO1273

Nevada License # 25146A **Gross Weight** 71,000 LBS

Length 40 feet **Height** 13 feet 6 inches, **Width** 96 inches (8')

Non divisible drilling Rig

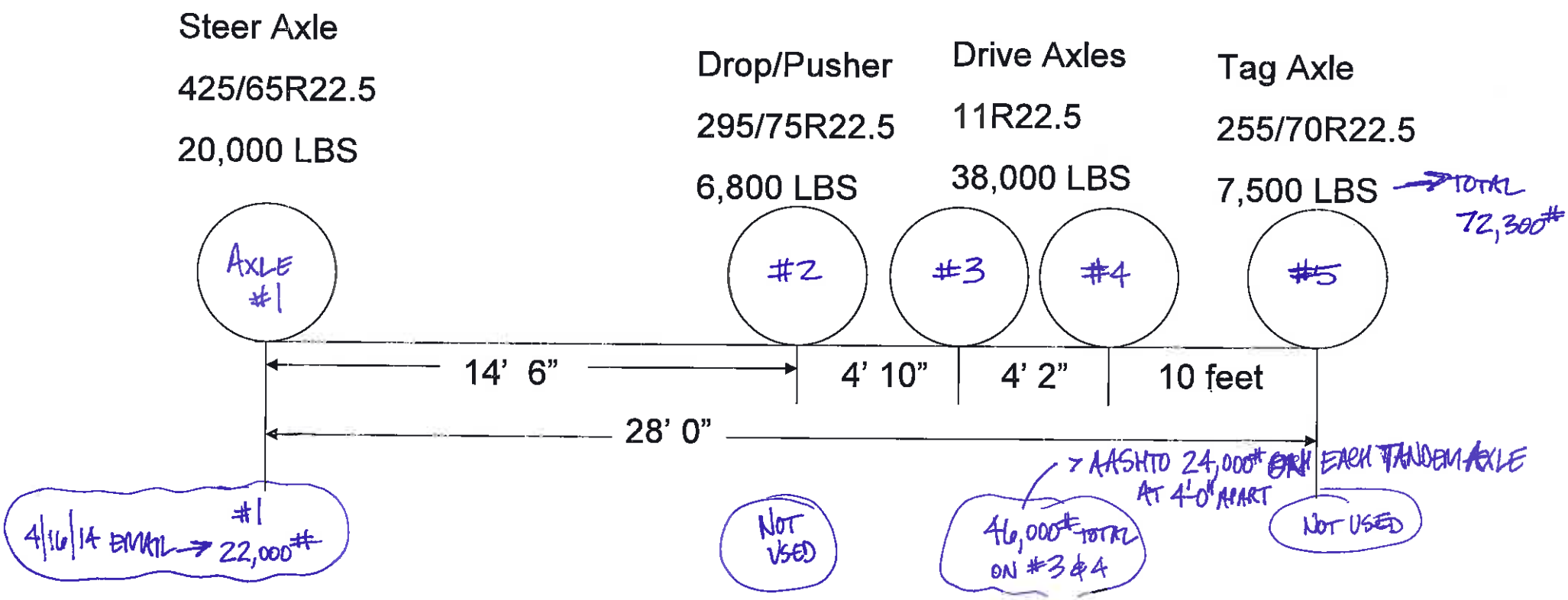

G-5

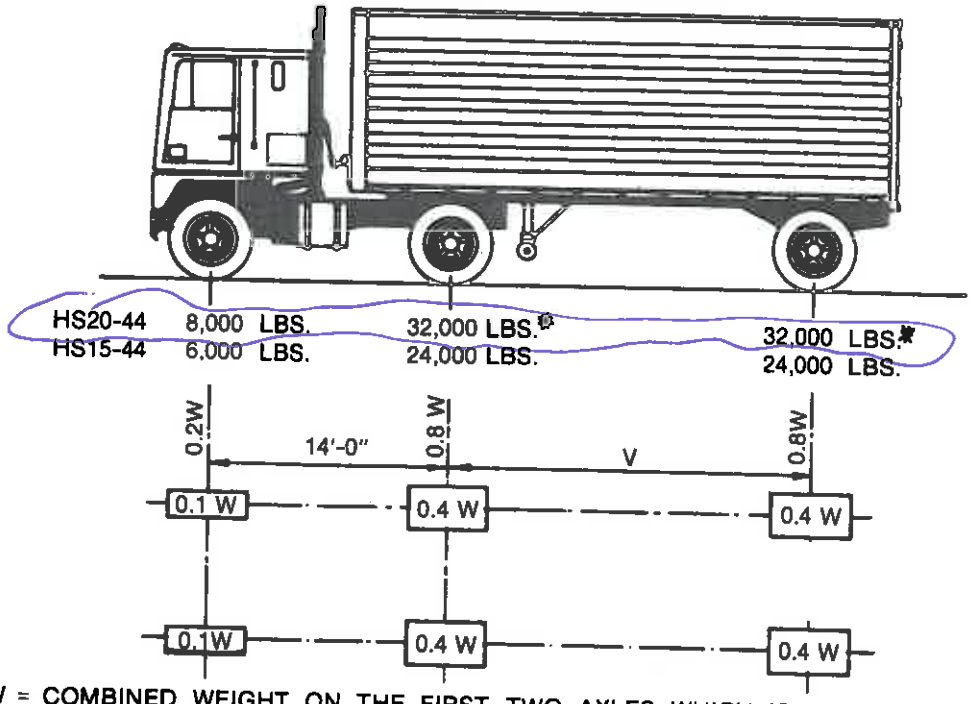

W = COMBINED WEIGHT ON THE FIRST TWO AXLES WHICH IS THE SAME AS FOR THE CORRESPONDING H TRUCK.

V = VARIABLE SPACING — 14 FEET TO 30 FEET INCLUSIVE. SPACING TO BE USED IS THAT WHICH PRODUCES MAXIMUM STRESSES.

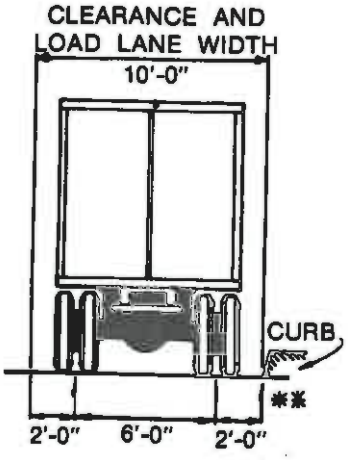

FIGURE 3.7.7A Standard HS Trucks

*In the design of timber floors and orthotropic steel decks (excluding transverse beams) for H 20 Loading, one axle load of 24,000 pounds or two axle loads of 16,000 pounds each, spaced 4 feet apart may be used, whichever produces the greater stress, instead of the 32,000-pound axle shown.

**For slab design, the center line of wheels shall be assumed to be 1 foot from face of curb. (See Article 3.24.2.)

3.10 CENTRIFUGAL FORCES

3.10.1 Structures on curves shall be designed for a horizontal radial force equal to the following percentage of the live load, without impact, in all traffic lanes:

$$C = 0.00117S^2D = \frac{6.68S^2}{R} \qquad (3\text{-}2)$$

where,

C = the centrifugal force in percent of the live load, without impact;
S = the design speed in miles per hour;
D = the degree of curve;
R = the radius of the curve in feet.

3.10.2 The effects of superelevation shall be taken into account.

3.10.3 The centrifugal force shall be applied 6 feet above the roadway surface, measured along the center line of the roadway. The design speed shall be determined with regard to the amount of superelevation provided in the roadway. The traffic lanes shall be loaded in accordance with the provisions of Article 3.7 with one standard truck on each design traffic lane placed in position for maximum loading.

3.10.4 Lane loads shall not be used in the computation of centrifugal forces.

3.10.5 When a reinforced concrete floor slab or a steel grid deck is keyed to or attached to its supporting members, it may be assumed that the deck resists, within its plane, the shear resulting from the centrifugal forces acting on the live load.

3.11 APPLICATION OF LIVE LOAD

3.11.1 Traffic Lane Units

In computing stresses, each 10-foot lane load or single standard truck shall be considered as a unit, and fractions of load lane widths or trucks shall not be used.

3.11.2 Number and Position of Traffic Lane Units

The number and position of the lane load or truck loads shall be as specified in Article 3.7 and, whether lane or truck loads, shall be such as to produce maximum stress, subject to the reduction specified in Article 3.12.

3.11.3 Lane Loads on Continuous Spans

For the determination of maximum negative moment in the design of continuous spans, the lane load shown in Figure 3.7.6B shall be modified by the addition of a second, equal weight concentrated load placed in one other span in the series in such position to produce the maximum effect. For maximum positive moment, only one concentrated load shall be used per lane, combined with as many spans loaded uniformly as are required to produce maximum moment.

3.11.4 Loading for Maximum Stress

3.11.4.1 On both simple and continuous spans, the type of loading, whether lane load or truck load, to be used shall be the loading which produces the maximum stress. The moment and shear tables given in Appendix A show which types of loading controls for simple spans.

3.11.4.2 For continuous spans, the lane loading shall be continuous or discontinuous; only one standard H or HS truck per lane shall be considered on the structure.

3.12 REDUCTION IN LOAD INTENSITY

3.12.1 Where maximum stresses are produced in any member by loading a number of traffic lanes simultaneously, the following percentages of the live loads may be used in view of the improbability of coincident maximum loading:

	Percent
One or two lanes	100
Three lanes	90
Four lanes or more	75

3.12.2 The reduction in load intensity specified in Article 3.12.1 shall not be applicable when distribution factors from Table 3.23.1 are used to determine moments in longitudinal beams.

3.12.3 The reduction in intensity of loads on transverse members such as floor beams shall be determined as in the case of main trusses or girders, using the number of traffic lanes across the width of roadway that must be loaded to produce maximum stresses in the floor beam.

3.3.5 Where the abrasion of concrete is not expected, the traffic may bear directly on the concrete slab. If considered desirable, ¼ inch or more may be added to the slab for a wearing surface.

3.3.6 The following weights are to be used in computing the dead load:

	#/cu.ft.
Steel or cast steel	490
Cast iron	450
Aluminum alloys	175
Timber (treated or untreated)	50
Concrete, plain or reinforced	150
Compacted sand, earth, gravel, or ballast	120
Loose sand, earth, and gravel	100
Macadam or gravel, rolled	140
Cinder filling	60
Pavement, other than wood block	150
Railway rails, guardrails, and fastenings (per linear foot of track)	200
Stone masonry	170
Asphalt plank, 1 in. thick	9 lb. sq. ft.

3.4 LIVE LOAD

The live load shall consist of the weight of the applied moving load of vehicles, cars, and pedestrians.

3.5 OVERLOAD PROVISIONS

3.5.1 For all loadings less than H 20, provision shall be made for an infrequent heavy load by applying Loading Combination IA (see Article 3.22), with the live load assumed to be H or HS truck and to occupy a single lane without concurrent loading in any other lane. The overload shall apply to all parts of the structure affected, except the roadway deck, or roadway deck plates and stiffening ribs in the case of orthotropic bridge superstructures.

3.5.2 Structures may be analyzed for an overload that is selected by the operating agency in accordance with Loading Combination Group IB in Article 3.22.

3.6 TRAFFIC LANES

3.6.1 The lane loading or standard truck shall be assumed to occupy a width of 10 feet.

3.6.2 These loads shall be placed in 12-foot wide design traffic lanes, spaced across the entire bridge roadway width measured between curbs.

3.6.3 Fractional parts of design lanes shall not be used, but roadway widths from 20 to 24 feet shall have two design lanes each equal to one-half the roadway width.

3.6.4 The traffic lanes shall be placed in such numbers and positions on the roadway, and the loads shall be placed in such positions within their individual traffic lanes, so as to produce the maximum stress in the member under consideration.

3.7 HIGHWAY LOADS

3.7.1 Standard Truck and Lane Loads*

3.7.1.1 The highway live loadings on the roadways of bridges or incidental structures shall consist of standard trucks or lane loads that are equivalent to truck trains. Two systems of loading are provided, the H loadings and the HS loadings—the HS loadings being heavier than the corresponding H loadings.

3.7.1.2 Each lane load shall consist of a uniform load per linear foot of traffic lane combined with a single concentrated load (or two concentrated loads in the case of continuous spans—see Article 3.11.3), so placed on the span as to produce maximum stress. The concentrated load and uniform load shall be considered as uniformly distributed over a 10-foot width on a line normal to the center line of the lane.

3.7.1.3 For the computation of moments and shears, different concentrated loads shall be used as indicated in Figure 3.7.6B. The lighter concentrated loads shall be used when the stresses are primarily bending stresses, and the heavier concentrated loads shall be used when the stresses are primarily shearing stresses.

*Note: The system of lane loads defined here (and illustrated in Figure 3.7.6.B) was developed in order to give a simpler method of calculating moments and shears than that based on wheel loads of the truck.

Appendix B shows the truck train loadings of the 1935 Specifications of AASHO and the corresponding lane loadings.

In 1944, the HS series of trucks was developed. These approximate the effect of the corresponding 1935 truck preceded and followed by a train of trucks weighing three-fourths as much as the basic truck.

3.7.2 Classes of Loading

There are four standard classes of highway loading: H 20, H 15, HS 20, and HS 15. Loading H 15 is 75% of Loading H 20. Loading HS 15 is 75% of Loading HS 20. If loadings other than those designated are desired, they shall be obtained by proportionately changing the weights shown for both the standard truck and the corresponding lane loads.

3.7.3 Designation of Loadings

The policy of affixing the year to loadings to identify them was instituted with the publication of the 1944 Edition in the following manner:

H 15 Loading, 1944 Edition shall be designated.....	H 15-44
H 20 Loading, 1944 Edition shall be designated.....	H 20-44
H 15-S 12 Loading, 1944 Edition shall be designated.....	HS 15-44
H 20-S 16 Loading, 1944 Edition shall be designated.....	HS 20-44

The affix shall remain unchanged until such time as the loading specification is revised. The same policy for identification shall be applied, for future reference, to loadings previously adopted by AASHTO.

3.7.4 Minimum Loading

Bridges supporting Interstate highways or other highways which carry, or which may carry, heavy truck traffic, shall be designed for HS 20-44 Loading or an Alternate Military Loading of two axles four feet apart with each axle weighing 24,000 pounds, whichever produces the greatest stress.

3.7.5 H Loading

The H loadings consist of a two-axle truck or the corresponding lane loading as illustrated in Figures 3.7.6A and 3.7.6B. The H loadings are designated H followed by a number indicating the gross weight in tons of the standard truck.

3.7.6 HS Loading

The HS loadings consist of a tractor truck with semitrailer or the corresponding lane load as illustrated in Figures 3.7.7A and 3.7.6B. The HS loadings are designated by the letters HS followed by a number indicating the gross weight in tons of the tractor truck. The variable axle spacing has been introduced in order that the spacing of axles may approximate more closely the tractor trailers now in use. The variable spacing also provides a more satisfactory loading for continuous spans, in that heavy axle loads may be so placed on adjoining spans as to produce maximum negative moments.

3.8 IMPACT

3.8.1 Application

Highway Live Loads shall be increased for those structural elements in Group A, below, to allow for dynamic, vibratory and impact effects. Impact allowances shall not be applied to items in Group B. It is intended that impact be included as part of the loads transferred from superstructure to substructure, but shall not be included in loads transferred to footings nor to those parts of piles or columns that are below ground.

3.8.1.1 Group A—Impact shall be included.

(1) Superstructure, including legs of rigid frames.
(2) Piers, (with or without bearings regardless of type) excluding footings and those portions below the ground line.
(3) The portions above the ground line of concrete or steel piles that support the superstructure.

3.8.1.2 Group B—Impact shall not be included.

(1) Abutments, retaining walls, piles except as specified in Article 3.8.1.1 (3).
(2) Foundation pressures and footings.
(3) Timber structures.
(4) Sidewalk loads.
(5) Culverts and structures having 3 feet or more cover.

3.8.2 Impact Formula

3.8.2.1 The amount of the impact allowance or increment is expressed as a fraction of the live load stress, and shall be determined by the formula:

$$I = \frac{50}{L+125} \qquad (3\text{-}1)$$

in which,

I = impact fraction (maximum 30 percent);

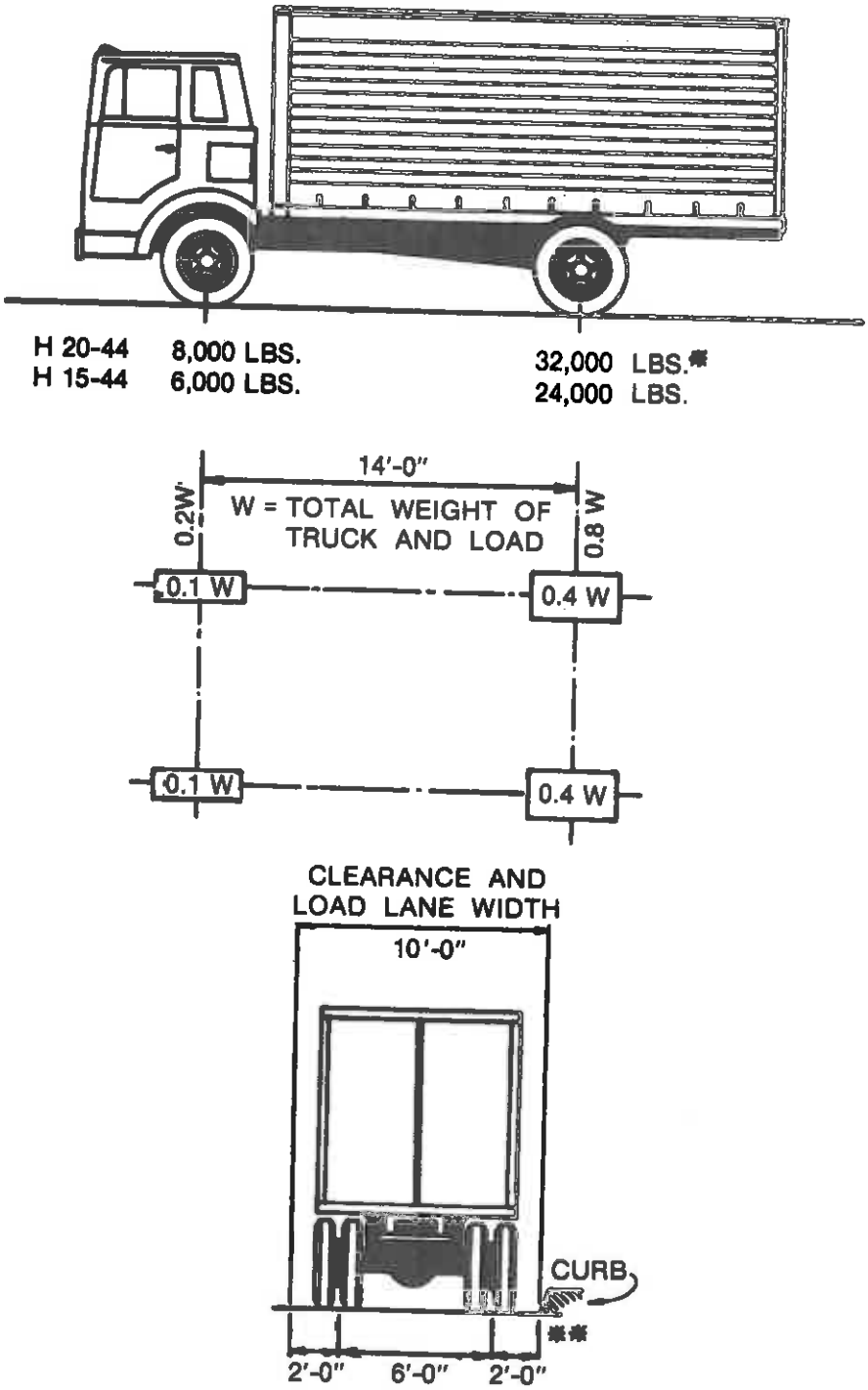

FIGURE 3.7.6A Standard H Trucks

*In the design of timber floors and orthotropic steel decks (excluding transverse beams) for H 20 Loading, one axle load of 24,000 pounds or two axle loads of 16,000 pounds each spaced 4 feet apart may be used, whichever produces the greater stress, instead of the 32,000-pound axle shown.

**For slab design, the center line of wheels shall be assumed to be 1 foot from face of curb. (See Article 3.24.2.)

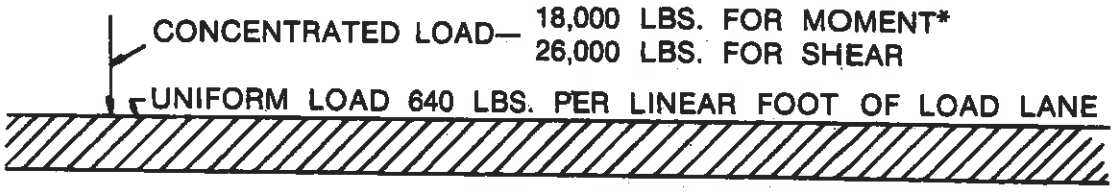

H20-44 LOADING
HS20-44 LOADING

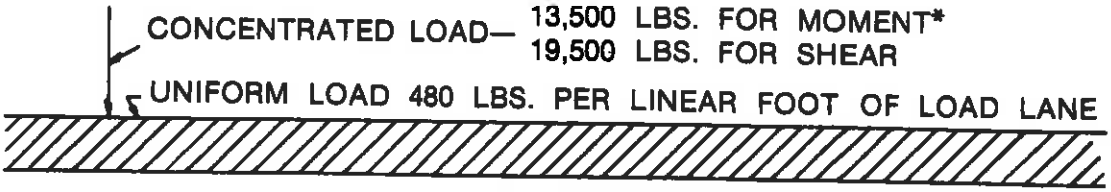

H15-44 LOADING
HS15-44 LOADING

FIGURE 3.7.6B Lane Loading

*For the loading of continuous spans involving lane loading refer to Article 3.11.3 which provides for an additional concentrated load.

L = length in feet of the portion of the span that is loaded to produce the maximum stress in the member.

3.8.2.2 For uniformity of application, in this formula, the loaded length, L, shall be as follows:

(a) For roadway floors: the design span length.
(b) For transverse members, such as floor beams: the span length of member center to center of supports.
(c) For computing truck load moments: the span length, or for cantilever arms the length from the moment center to the farthermost axle.
(d) For shear due to truck loads: the length of the loaded portion of span from the point under consideration to the far reaction; except, for cantilever arms, use a 30% impact factor.
(e) For continuous spans: the length of span under consideration for positive moment, and the average of two adjacent loaded spans for negative moment.

3.8.2.3 For culverts with cover

0′0″ to 1′-0″ inc. I = 30%
1′-1″ to 2′-0″ inc. I = 20%
2′-1″ to 2′-11″ inc. I = 10%

3.9 LONGITUDINAL FORCES

Provision shall be made for the effect of a longitudinal force of 5% of the live load in all lanes carrying traffic headed in the same direction. All lanes shall be loaded for bridges likely to become one directional in the future. The load used, without impact, shall be the lane load plus the concentrated load for moment specified in Article 3.7, with reduction for multiple-loaded lanes as specified in Article 3.12. The center of gravity of the longitudinal force shall be assumed to be located 6 feet above the floor slab and to be transmitted to the substructure through the superstructure.

ARCADIS

SUBJECT: TOPOK – UTILITY PAD

JOB NO:

BY: MSL DATE: 12/19/14

CHKD: DATE:

PAGE H-1

SHEET 1

UTILITY PAD DESIGN

- REF SHT H-2A & 2B FOR FRP TANK LATERAL SEISMIC/WIND STRAPS
- REF SHT H-2 FOR UTILITY PAD DRAWING LAYOUT
- REF SHT A-6 FOR ASCE 7-10 SEISMIC INFO
  - ~ PARK MOABI LOCATION (SHT H-3) ← W/IN 1% SO OK
- ASCE 7-05 ~ FIGURE 26.5-1B – CAT IV – "FIRE WATER TANK"
  - BASIC WIND SPEED = 115 MPH (3 SECOND)

15,000 GAL FIRE WATER TANK

- REF SHT H-4 FOR TANK INFO
- REF SHT H-5 FOR TANK LATERAL SEISMIC LOADS
  - AWWA D103 ~ $V_{SEISMIC} = 17.32^K$
  - ASCE 7-10 ~ 15.7.6 ~ $V_{SEISMIC} = 16.08^K$
- REF SHT H-6 AWWA D103 ~ $V_{SEISMIC} = 9.82^K$
  - $M_{SEISMIC} = 98.93^{K \cdot FT}$
  - ~ ANCHORAGE REQ'D FOR OVERTURNING
- ASCE 7-10 15.4.2 RIGID NON-BLDG STRUCTURE (PER 15.7.6.1-a)

$$V = 0.3 S_{DS} W I_e = 0.3(0.245)(127{,}675^{\#})(1.5)$$

DL & FULL WATER

$$= 14.08^K$$

USE

$$M_{SEISMIC} = 17.32^K \times (18.5^{FT}/2) = 160.2^{K \cdot FT}$$

AGM Form 30 12-01

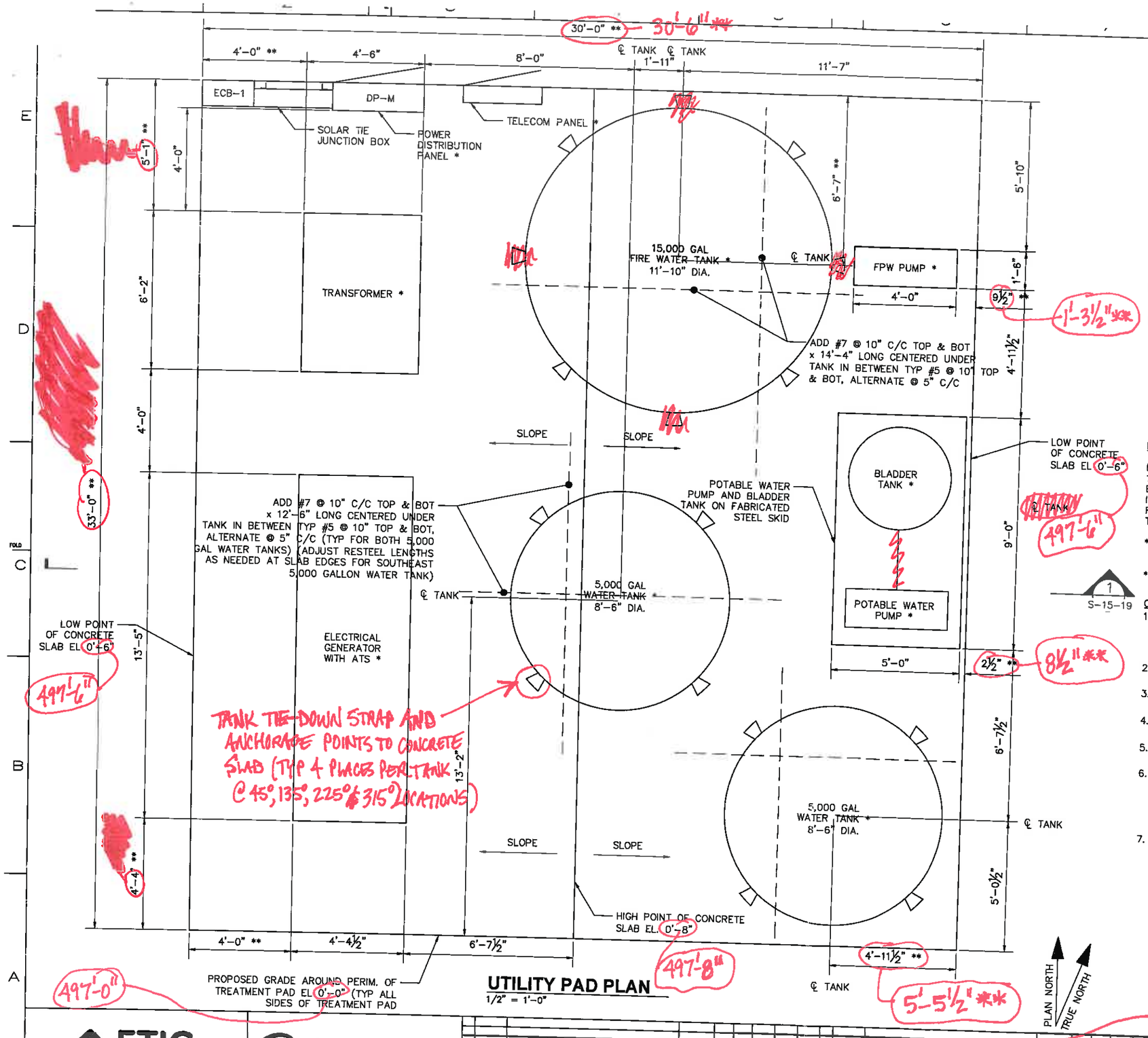

UTILITY PAD PLAN

1/2" = 1'-0"

H-2

FOUNDATION NOTES:

1. IF THE BUILDING OFFICIAL OR GEOTECHNICAL ENGINEER DETERMINES THAT EXPANSIVE SOILS OR OTHER GEOLOGIC ISSUES OF CONCERN MAY BE PRESENT, THEN HE/SHE MAY REQUIRE THAT SPECIAL PROVISIONS BE MADE TO THE FOUNDATION DESIGN TO SAFEGUARD AGAINST DAMAGE DUE TO THE EXPANSIVENESS OR OTHER GEOLOGIC ISSUES. IF THIS BECOMES THE SITUATION THEN ALL FOUNDATION CONSTRUCTION MUST BE HALTED AND THE GEOTECHNICAL ENGINEER SHALL PROVIDE A GEOTECHNICAL REPORT WITH RECOMMENDATIONS IN CONSIDERATION OF THE CONDITIONS.
2. REFER TO THE GENERAL NOTES AND STRUCTURAL SPECIFICATIONS FOR ADDITIONAL REQUIREMENTS.
3. STRUCTURAL OBSERVATIONS OF CONSTRUCTION ARE RECOMMENDED (PER CBC SECTION 1702), SO AS TO OBSERVE THE PROGRESS AND QUALITY OF THE CONTRACTOR'S WORK AND TO DETERMINE IF THE WORK IS PROCEEDING IN GENERAL ACCORDANCE WITH THE CONSTRUCTION DOCUMENTS.
4. REINFORCING STEEL: ASTM A615, 60KSI YIELD GRADE, DEFORMED BILLET STEEL BARS, UNFINISHED
5. PLACE, SUPPORT AND SECURE REINFORCEMENT AGAINST DISPLACEMENT. DO NOT DEVIATE FROM REQUIRED POSITION.
6. AGGREGATE BASE MATERIAL: TO BE CRUSHED GRAVEL MEETING THE FOLLOWING GRADATION AND COMPACTED TO 95% MAXIMUM DRY DENSITY OF MODIFIED PROCTOR.

SIEVE SIZE	TOTAL PERCENT PASSING
2 INCH	100
1 INCH	70 TO 100
3/4 INCH	50 TO 90
NO. 4	30 TO 60
NO. 30	9 TO 33
NO. 200	0 TO 6

FOUNDATION DESIGN:

BASED UPON 2,000 PSF ALLOWABLE BEARING PRESSURE IN CONFORMANCE WITH CBC TABLE 1806.2 FOR CLASSIFICATION(S) SW, SP, SM, SC, GM AND/OR GC. A LICENSED GEOTECHNICAL ENGINEER SHALL PROVIDE SUBGRADE COMPACTION AND PREPARATION REQUIREMENTS, AND SHALL INSPECT THE EXCAVATIONS AND CONFIRM THAT 2,000 PSF BEARING IS ALLOWED FOR THE FOUNDATIONS. WHEN ENGINEERED FILL IS REQUIRED BY THE GEOTECHNICAL ENGINEER, IT SHALL BE TESTED AND INSPECTED BY THE GEOTECHNICAL ENGINEER.

* VERIFY SIZE WITH APPROVED TANK, PUMP, TRANSFORMER, GENERATOR AND ELECTRICAL/COMMUNICATION PANEL MANUFACTURER'S SHOP DRAWINGS.

** CONCRETE DIMENSIONS TO BE VERIFIED PER APPROVED TANK, PUMP, TRANSFORMER, GENERATOR, AND ELECTRICAL/COMMUNICATIONS PANEL MANUFACTURER'S SHOP DRAWINGS.

CODE DESIGN LOADS:

1. DESIGN CODES: 2013 CALIFORNIA BUILDING CODE
   2012 INTERNATIONAL BUILDING CODE
   ASCE 7-10
2. RISK CATEGORY: IV
3. LIVE LOADS: 100 PSF
4. SNOW LOADING: N/A
5. FLOOD LOADS: N/A
6. WIND LOADS:
   BASIC WIND SPEED (3 SECOND GUST) V = 115 MPH – ULTIMATE OR MINIMUM NET WIND PRESSURE, Pnet = 20 PSF WHICHEVER IS GREATER
   WIND EXPOSURE C
7. SEISMIC LOADS:
   SEISMIC IMPORTANCE FACTOR – Ie – 1.5
   SEISMIC DESIGN CATEGORY – D
   SEISMIC SITE CLASS – D
   MAPPED SPECTRAL RESPONSE ACCELERATIONS – Ss = 0.230; S1 = 0.120
   SPECTRAL RESPONSE COEFFICIENTS – Sds = 0.245; Sd1 = 0.186
   ANALYSIS PROCEDURE – ASCE 7-10 CHAPTER 15 SEISMIC REQUIREMENTS FOR NON-BUILDING STRUCTURES FOR TANKS AND CHAPTER 13 SEISMIC DESIGN REQUIREMENTS FOR NON-STRUCTURAL COMPONENTS FOR PUMPS, TRANSFORMER, GENERATOR AND ELECTRICAL/COMMUNICATIONS PANELS, AND STEEL SKID

FABRICATED

- DRAFT - NOT FOR CONSTRUCTION

ETIC ENGINEERING

ARCADIS

NO.	DATE	DESCRIPTION	GM/SPEC	DWN	CHKD	SUPV	APVD BY
0	12/18/14	SUPPLEMENTAL PRE-FINAL (90%) DESIGN	CMW	MSL	JPB	RAK	

REVISIONS

APPROVED BY: JEF

12/30/14

SUPV	JPB
DSGN	CMW
DWN	CMW
CHKD	MSL
OK RAK	
DATE	12/12/14
SCALES	

TOPOCK GROUNDWATER REMEDIATION PROJECT

UTILITY PAD PLAN

GAS TRANSMISSION & DISTRIBUTION

PACIFIC GAS AND ELECTRIC COMPANY

SAN FRANCISCO, CALIFORNIA

MICROFILM

BILL OF MATL

DWG LIST

SUPSDS

SUPSD BY

SHEET NO. of SHEETS

REV

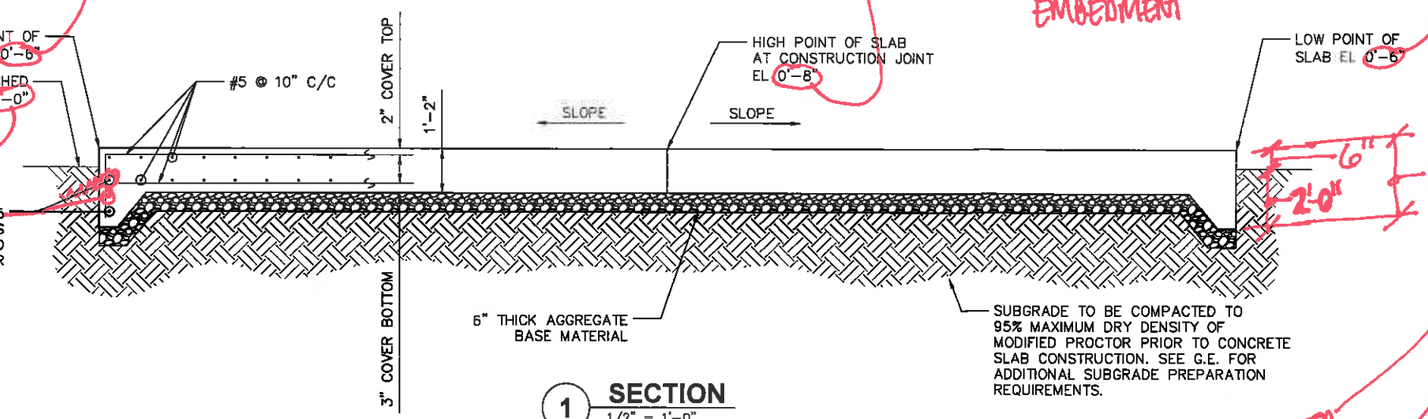

1 **SECTION**
1/2" = 1'-0"

C 8" MINIMUM SPACING AND 10" MINIMUM EMBEDMENT

NOTES:

1. 15,000 GALLON FIRE WATER TANK:
   1.1. TANK TIE-DOWN STRAPS AND ANCHORAGE TO CONCRETE SLAB (FOR SEISMIC AND WIND LOADS SHOWN ON SHEET S-15-18) ARE TO BE DESIGNED AND PROVIDED BY TANK MANUFACTURER. HOWEVER, A MINIMUM OF 8 TIE-DOWN STRAPS (EQUALLY SPACED AROUND PERIMETER) TO BE PROVIDED. EACH TIE-DOWN STRAP TO HAVE A MINIMUM OF (3)-~~HILTI~~ M16X190/60 GALVANIZED UNDERCUT ANCHORS @ 8" C/C MINIMUM SPACING AND EMBEDMENT (TANK MANUFACTURER TO DESIGN TIE-DOWN TO UNDERCUT ANCHOR CONNECTION). TANK MUST ALSO HAVE A MINIMUM OF (4)-L6x3½x⅝x8" LONG CLIP ANGLES LLV WITH (1)-3/4" DIAMETER GALVANIZED ADHESIVE ANCHOR W/ 9" EMBEDMENT IN EACH CLIP ANGLE. SPACE 4 CLIP ANGLES EQUALLY AROUND TANK PERIMETER.
   1.2. STRUCTURAL DESIGN OF FOUNDATION SLAB ASSUMES A 15,000 GALLON FIRE WATER TANK OF THE FOLLOWING GEOMETRY:
      1.2.1. APPROX 11'-10" DIA FLAT-BOTTOM TANK WITH ROUNDED ROOF TOP STARTING APPROX 18'-0" ABOVE TOP OF SLAB AND TOP OF ROOF AT APPROX 19'-3½" ABOVE TOP OF SLAB.
      1.2.2. TANK CAPACITY = 15,000 GALLONS WITH LIQUID SPECIFIC GRAVITY SIMILAR TO WATER.
      1.2.3. FRP TANK CONSTRUCTION WITH EMPTY WEIGHT = 2,500#.
2. 5,000 GALLON WATER TANK:
   2.1. TANK TIE-DOWN STRAPS AND ANCHORAGE TO CONCRETE SLAB (FOR SEISMIC AND WIND LOADS SHOWN ON SHEET S-15-18) ARE TO BE DESIGNED AND PROVIDED BY TANK MANUFACTURER. HOWEVER, A MINIMUM OF 4 TIE-DOWN STRAPS (EQUALLY SPACED AROUND PERIMETER) TO BE PROVIDED. EACH TIE-DOWN STRAP TO HAVE A MINIMUM OF (3)-~~HILTI~~ M16X190/60 GALVANIZED UNDERCUT ANCHORS @ 8" C/C MINIMUM SPACING AND EMBEDMENT (TANK MANUFACTURER TO DESIGN TIE-DOWN TO UNDERCUT ANCHOR CONNECTION). TANK MUST ALSO HAVE A MINIMUM OF (4)-L6x3½x⅝x8" LONG CLIP ANGLES LLV WITH (1)-3/4" DIAMETER GALVANIZED ADHESIVE ANCHOR WITH 9" EMBEDMENT IN EACH CLIP ANGLE. SPACE 4 CLIP ANGLES EQUALLY AROUND TANK PERIMETER.
   2.2. STRUCTURAL DESIGN OF FOUNDATION SLAB ASSUMES A 5,000 GALLON WATER TANK OF THE FOLLOWING GEOMETRY:
      2.2.1. APPROX 8'-6" DIA FLAT-BOTTOM TANK WITH ROUNDED ROOF TOP STARTING APPROX 11'-6" ABOVE TOP OF SLAB AND TOP OF ROOF AT APPROX 12'-9" ABOVE TOP OF SLAB.
      2.2.2. TANK CAPACITY = 5,000 GALLONS WITH LIQUID SPECIFIC GRAVITY SIMILAR TO WATER.
      2.2.3. FRP TANK CONSTRUCTION WITH EMPTY WEIGHT = 1,250#.
3. BLADDER TANK, TRANSFORMER, ELECTRICAL GENERATOR, PUMPS, ELECTRICAL/COMMUNICATION PANELS, AND FABRICATED STEEL SKID:
   3.1. EQUIPMENT ANCHORAGE TO FABRICATED STEEL SKID AND FABRICATED STEEL SKID TO CONCRETE SLAB (FOR SEISMIC AND WIND LOADS SHOWN ON S-15-18) ARE TO BE DESIGNED AND PROVIDED BY EQUIPMENT MANUFACTURER.

4 1¾" ADHESIVE (2) ~~[illegible]~~ 10" MINIMUM 3/4" DIAMETER ADHESIVE 10" MINIMUM (2)-3/4" DIAMETER ADHESIVE 10" CAD ALIGN W/ TEXT ABOVE

- DRAFT -
NOT FOR CONSTRUCTION

ETIC ENGINEERING
ARCADIS

NO.	DATE	DESCRIPTION	GM/SPEC	DWN	CHKD	SUPV	APVD BY
0	12/18/14	SUPPLEMENTAL PRE-FINAL (90%) DESIGN		CMW	MSL	JPB	RAK

REVISIONS

APPROVED BY JEF
SO
SUPV JPB
DSGN CMW
DWN CMW
CHKD MSL
CK RAK
DATE 12/12/14
SCALES

12/30/14

TOPOCK GROUNDWATER REMEDIATION PROJECT
UTILITY PAD SECTIONS
GAS TRANSMISSION & DISTRIBUTION
PACIFIC GAS AND ELECTRIC COMPANY
SAN FRANCISCO, CALIFORNIA

TO CMW 12/22/14

MICROFILM
BILL OF MATL
DWG LIST
SUPSDS
SUPSD BY
SHEET NO. S-15-19 of SHEETS
REV 0

H-2A

CONSERVATIVE

SNYDER INDUSTRIAL DESIGN

TOPOK

$S_{DS} = \left(\frac{2}{3}\right) F_a S_s = 0.933 > 0.245$ ✓OK

$S_{D1} = \left(\frac{2}{3}\right) F_v S_1 = 0.500 > 0.186$ ✓OK

Click here for download of Cone Bottom Tank Engineering Calculations

Click here for Snyder's Guidelines for Use and Installation (section 8.2 and 8.3 cover Seismic Restraint System Installation)

Seismic FAQs

Q1. What is Snyder's VST, Captor and Cone Bottom seismic systems design figures?

Created on: 8/22/2013; Modified on 8/22/2013;

Answer:

The seismic restraint system for VSTs and Captors offered by Snyder meets System meets IBC 2009 / CBC 2010 code with seismic loads ≤ .445g SDC (Seismic Design Category) "D" - Fa=1.0, Fv=1.5, Ss=1.4, S1=0.5). The seismic restraint system for Cone Bottom tanks offered by Snyder meets IBC 2009/CBC2010 code with seismic loads ≤.33g SDC "D" - Fa=1.0, Fv-1.5, SDS=1.105, SD1=0.597. If the requirement is greater than these design coefficients then you will need to contact Snyder to see if a system can be provided to meet the requirements for the site. This may change the price of the standard seismic system offered in Snyder's Industrial Tank Price List.

See question 9 for further explanation of Seismic Design Category (SDC).

Viewed: 152 times

Q2. What is IBC and CBC and how does it affect me?

Created on: 8/22/2013; Modified on 8/22/2013;

Answer:

IBC stands for International Building Code. CBC stands for California Building Code.

If you are in California, then the new California Building Code of 2007 (CBC 2007) took effect on January 1, 2008.

On July 1st of 2010 a new code was published for use in California. The new California Building Code of 2010 (CBC 2010) went into effect on January 1st of 2011. The new code is based on the

2009 IBC and ASCE/SEI 7-05. Here's how the transition to the new code works...all plans submitted to the state for permit on January 1st, 2011 or later, will be plan checked and constructed in accordance with the CBC 2010. As such, new calculations will be required. If a building was submitted for plan check on December 31, 2010 or earlier, it willl be plan checked and constructed in accordance with the CBC 2007 code. All 2007 code calculations will be valid for those structures.

Viewed: 77 times

Q3. Is the IBC and California building code (CBC) the same thing? If not, what are the differences, which code should I follow when designing projects in California?

Created on: 8/22/2013; Modified on 8/22/2013;

Answer:

Yes, but with amendments. The California Building Standards Council (CBSC) went through extensive review of the IBC and the California legislature adopted it by law as the new CBC in 2007, making it effective January 1, 2008. The current version is CBC 2010 and that is the code you must now follow depending on when the local jurisdiction you are working in adopts it and when the structure was submitted for plan check.

Viewed: 75 times

Q4. What about other states other than California?

Created on: 8/22/2013; Modified on 8/22/2013;

Answer:

Other states may have already or may be soon adopting IBC 2006. Typically many states follow the lead of California on seismic system design requirement. You will need to check with local authorities for requirements for your area and when they take effect.

Viewed: 56 times

Q5. What does the code require with regard to equipment anchorage?

Created on: 8/22/2013; Modified on 8/22/2013;

Answer:

The California / International Building Codes require all stationary equipment to be anchored to its supporting structure (CBC 2010, Section 1613 & IBC 2009, Section 1613). In addition, much of this equipment must have calculations to validate its method of anchorage (ASCE 7-05, Section 13). For floor mounted equipment the requirement is for equipment that weighs 400 pounds or more or is over 60 inches in height.

Viewed: 128 times

Q6. How do I know if Snyder's system will be accepted?

Created on: 8/22/2013; Modified on 8/22/2013;

Answer:

With IBC 2009 / CBC 2010 the seismic design coefficients are site specific so each zip code may have different requirements. Our standard calculations are based on the design coefficients of a specific zip code in California (see seismic design coefficients in question 1). To determine if our standard calculations will be accepted we recommend you present a copy of our standard seismic

design calculations to the contractor and/or engineering firm and have them review the calculations for acceptance. If the calculations are not acceptable then you will need to have the contractor and/or engineering firm provide information on the design coefficients required for the project so they can be reviewed by Snyder.

Viewed: 82 times

Q7. What if I'm being asked to provide a wet stamp?

Created on: 8/22/2013; Modified on 8/22/2013;

Answer:

Original Wet Stamp calculations are listed in Snyder's price book as a purchased option for vertical tanks, double wall Captor tanks and cone bottom tanks. The wet stamps are broken down into three categories – Standard Calculation, Site Specific (VST/Captor), and Site Specific (CBT). The standard calculation is the calculation we already have done for a specific site that may work for your projects site. If, however, you require a "site specific" calculation which requires changes to the standard calculation then you would use the Site Specific calculation pricing. These site specific calculations will be provided in the same format at the standard calculation only they will be adjusted for the specific site design coefficients. If a "non-standard" format calculation is required please contact Snyder as these will need to be quoted on a case-by-case basis as priced by the Engineer contracted to provide the calculations.

A copy of our standard calculation can be provided (PDF format) at no charge by contacting your Snyder Regional Sales Manager or Customer Service.

Viewed: 88 times

Q8. What is a seismic design category?

Created on: 8/22/2013; Modified on 8/22/2013;

Answer:

The old Uniform Building Code (UBC) 1997 used maps with numbered zones, 0, 1, 2, 3, 4. These maps are practically obsolete (1969 was the last year such a map was put out). The current IBC 2009 code uses Seismic Design Category (SDC). A SDC is a classification assigned to a structure based on its occupancy or use (referred to as Occupancy Category) and on the level of expected soil modified seismic ground motion. This can be expressed schematically as follows:
[Occupancy Category] + [Soil modified seismic ground motion] → SDC

Seismic Design Category (SDC)

	What does it mean?
A	Very small seismic vulnerability
B	Low to moderate seismic vulnerability
C	Moderate seismic vulnerability
D	High seismic vulnerability
E&F	Very high seismic vulnerability and near a major fault.

To determine the seismic design category you need to determine the Ss and S1 using maps or calculation tool. If you are working on a specified project then have the contractor or engineering firm responsible for the specification provide you with these figures.

Ss = the maximum considered earthquake spectral response acceleration at short periods (0.2 seconds).

S1 = the maximum considered earthquake spectral response acceleration at 1 second period.

Viewed: 77 times

Q9. What size pad do I need for the seismic restraint system?

Created on: 8/22/2013; Modified on 8/22/2013;

Answer:

The diameter of the pad required is outlined in the standard VST and/or Captor calculations. Please review the calculations and find the pad drawing that applies to the tank you are using or quoting for your project. The pad design is based on the default value allowed by code. It may be possible to use a smaller pad size if soil conditions are known. This would have to be done by the engineer on site.

The thickness of the pad will need to be determined by a local design engineer based on the soil conditions; however the pad should be thick enough for the anchor embedment outlined in the standard calculations.

Please note that if you need a site specific seismic calculation or a non-standard calculation, then the pad size may differ substantially from what is shown in the standard calculation.

Viewed: 130 times

Q10. Today's date is beyond the "expired" date on the structural stamp, is the calculation still valid?

Created on: 8/22/2013; Modified on 8/22/2013;

Answer:

The calculation is valid as long as the date on the calculation is prior to the expired stamp. The expiration date as related to the date of the permitted drawings, applies to the Engineer of Record's stamp.

Viewed: 68 times

Q11. What anchor bolts are approved?

Created on: 8/22/2013; Modified on 8/22/2013;

Answer:

Anchor bolts are not included with the seismic restraint system provided by Snyder Industries. These must be purchased separately. The structural engineer that did our standard calculations has reviewed the anchor bolt requirements carefully and maintains the Hilti HVA anchor system is acceptable for the parameters of our seismic calculation set submitted.

Per 2007 CBC Section 1912, concrete anchors shall be designed in accordance with Appendix D of ACI 318 as modified by Section 1908.1.16. Per that Section, in structures in Seismic Design

Category D, post-installed anchors shall have passed the Simulated Seismic Tests of ACI 355.2, which includes testing of the anchors in cracked concrete. However, Appendix D of ACI 318 does not apply to epoxy anchor systems. The scope is limited to cast in-place and mechanical anchors. it does not address epoxy anchor systems.

If calculations are required to utilize a specific anchor bolt other than Hilti HVA style then site specific calculations would be required (additional cost for calculations).

Viewed: 141 times

© 2014 Snyder Industries. Web Hosting SR Web Creators

Seismic Restraint System

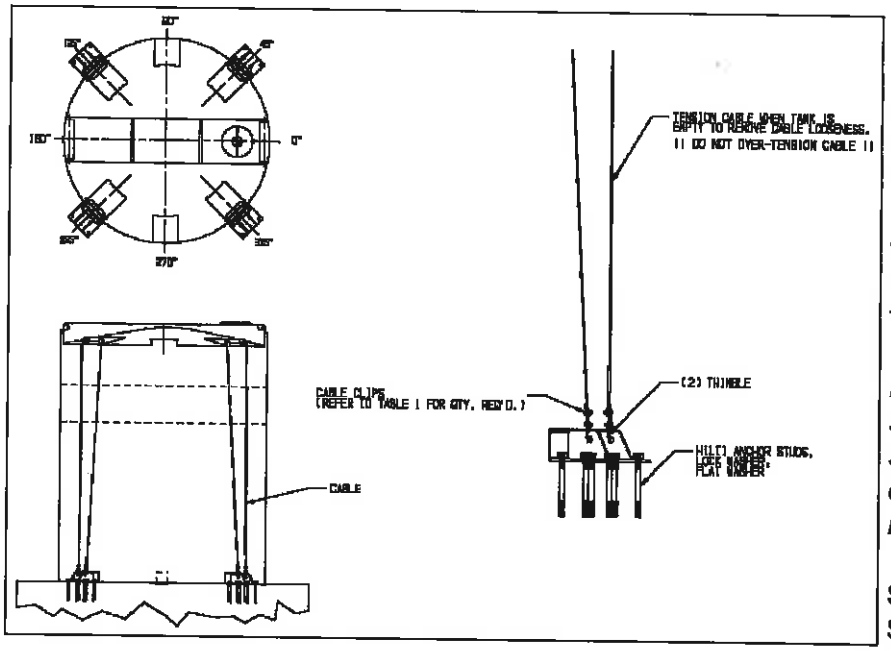

Snyder Seismic Restraint System not available for all Snyder tanks. Please check with Snyder Representative for details.

Design specifications subject to change without notice.

See Snyder Seismic System Q&A below, for further information.

Click here for download of Single Wall Vertical Tank Engineering Calculations

Click here for download of Captor Double Wall Tank Engineering Calculations

H-2B

height of the fitting is above 100", an additional Flexmaster can be installed in the vertical configuration to provide additional movement capability.

8. TANK ACCESSORIES

8.1 LATERAL RESTRAINT SYSTEM (FLAT BOTTOM TANKS)

8.1.1 The lateral restraint system is designed for tank position restraint on a concrete pad inside of an enclosed building. **It is not designed for wind or seismic restraint capabilities.** Using the assembly drawing and table shown in Figure 8.1, verify that all parts are present.

8.1.2 Locate the tank on the concrete pad as desired. The pad required for the restraint system must be 18-3/4" larger in diameter than the tank diameter for proper application of 1/2" adhesive anchor bolts (assumes 6-3/8" edge distance required). Lay out the bands around the tank (alternate long bands and short bands if both lengths are provided) with the studs and angle ends sticking out away from the tank. Fasten the bands together with the 3/8" - 16 x 4" hex head bolts as shown in the drawing. Raise the bands 17" and loosely install the anchor clips using the 1/2" - 13 hex nuts and 1/2" washers provided. Tighten the 3/8" - 16 x 4" hex head bolts to remove band looseness. Mark the slot locations of the anchor clips, remove the clips, and install the required number of 1/2" anchor bolts. Anchor bolts are not provided by the manufacturer and must be purchased by the customer.

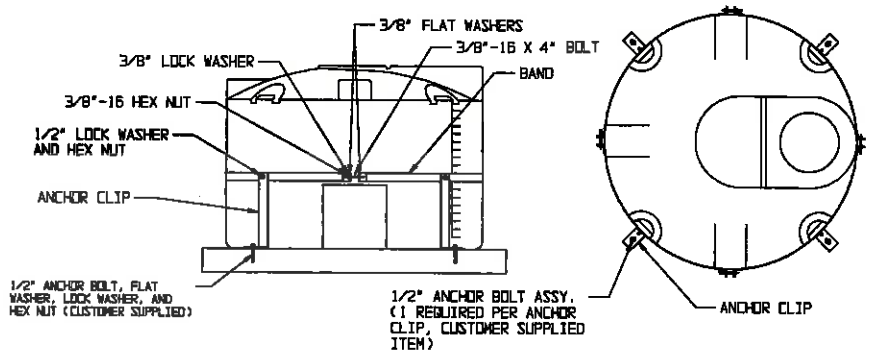

TANK DIA. (IN.)	QUANTITY REQUIRED					
	BAND 44 IN.	BAND 48 IN.	ANCHOR CLIPS	3/8"-16 X 4" BOLTS AND HEX NUTS	3/8" FLAT WASHERS	1/2" HEX NUTS AND FLAT WASHERS
48	0	3	3	3	6	3
64	0	4	4	4	8	4
86	5	0	5	5	10	5
90	3	3	6	6	12	6
102	7	0	7	7	14	7
120	4	4	8	8	16	8
137	4	5	9	9	18	9
142	0	9	9	9	18	9

Figure 8.1

8.1.3 Replace the anchor clips and secure the clips to both bands and the concrete pad. Do not over tighten the bands to the tank. The band tension should only remove looseness and not cause any tank deflection.

8.2 WIND/SEISMIC TANK RESTRAINT SYSTEM (FLAT BOTTOM TANKS)

allowable - service loads

8.2.1 The wind/seismic tank restraint system is designed for tank restraint on an appropriate concrete pad under 110 MPH wind or seismic zone 4 conditions. Using the assembly drawing and table sent with the assembly, verify that all parts are present. Please see Figure 8.2 for a restraint system installation and assembly information.

8.2.2 Locate the tank on the concrete pad as desired. Lay out all anchors required (4 or 8) equally spaced, (4 anchors must be directly below the tank tie down locations). Make sure all anchors are located next to the tank with the front face of the anchor weldment located next to the tank. Mark all the anchor bolt locations, remove the anchors and install the required Hilti adhesive model HVA anchor bolts as specified in the assem-

bly drawing and table sent with the assembly. These anchor bolts are not provided by the manufacturer and must be purchased by the customer. Customer must follow all Hilti anchor bolt installation instructions.

8.2.3 Replace the anchors and secure the anchors to the concrete. Fasten the tank to the concrete pad with the required cable (make sure the cable sheath is on the cable and located around the lug locations) as shown by the assembly drawing utilizing the cable thimbles and clamps provided. Tension the cable before filling the tank to remove cable looseness. Do not over-tension the cables as this may cause tank damage. The cable tension will change with tank loading and temperature changes - DO NOT re-tension the cables.

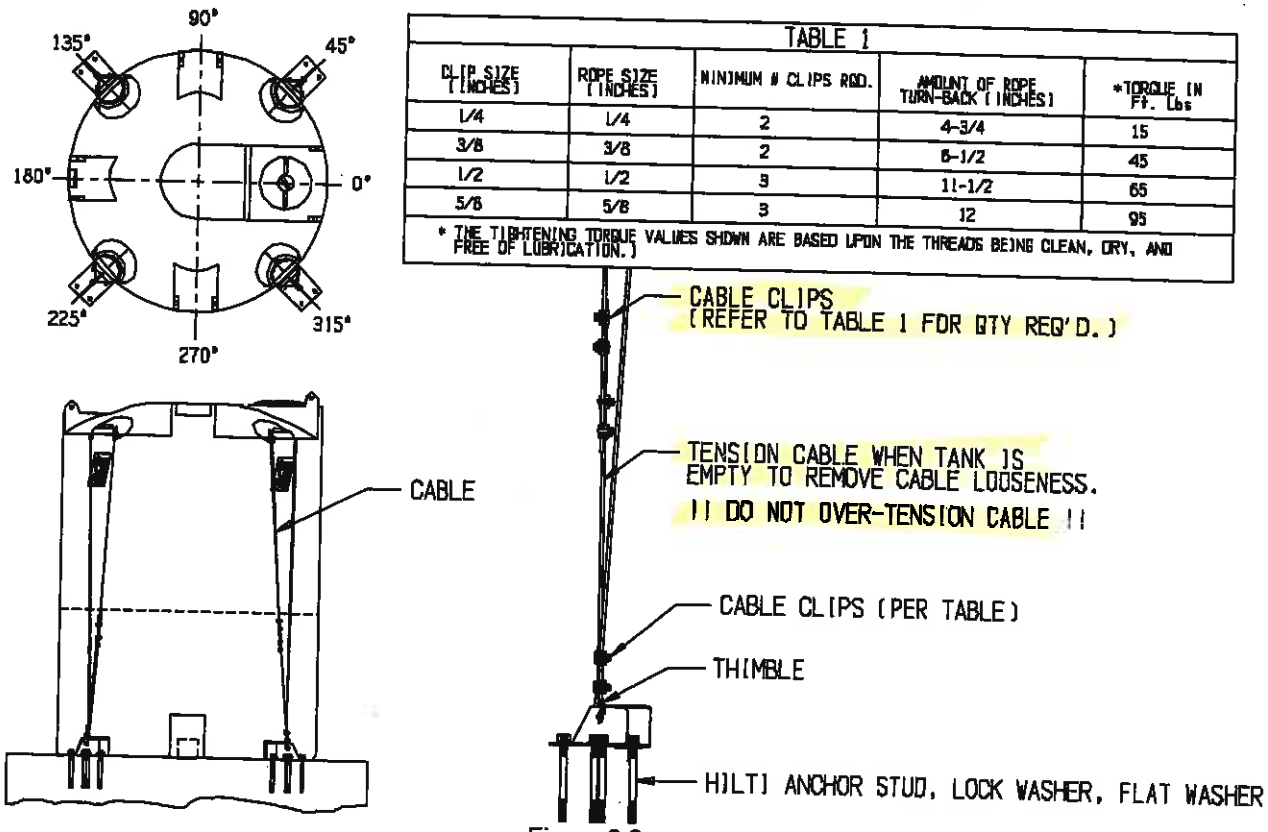

TABLE 1

CLIP SIZE (INCHES)	ROPE SIZE (INCHES)	MINIMUM # CLIPS REQ.	AMOUNT OF ROPE TURN-BACK (INCHES)	*TORQUE IN Ft. Lbs
1/4	1/4	2	4-3/4	15
3/8	3/8	2	6-1/2	45
1/2	1/2	3	11-1/2	65
5/8	5/8	3	12	95

* THE TIGHTENING TORQUE VALUES SHOWN ARE BASED UPON THE THREADS BEING CLEAN, DRY, AND FREE OF LUBRICATION.)

Figure 8.2

8.3 WIND/SEISMIC TANK RESTRAINT SYSTEM (CONE BOTTOM TANKS)

8.3.1 The wind/seismic tank restraint system is designed for cone bottom tank restraint on an appropriate concrete pad under 110 MPH wind or seismic zone 4 conditions using a SII cone stand for proper tank support. Using the assembly drawing and table shown in Figure 8.3, verify that all parts are present.

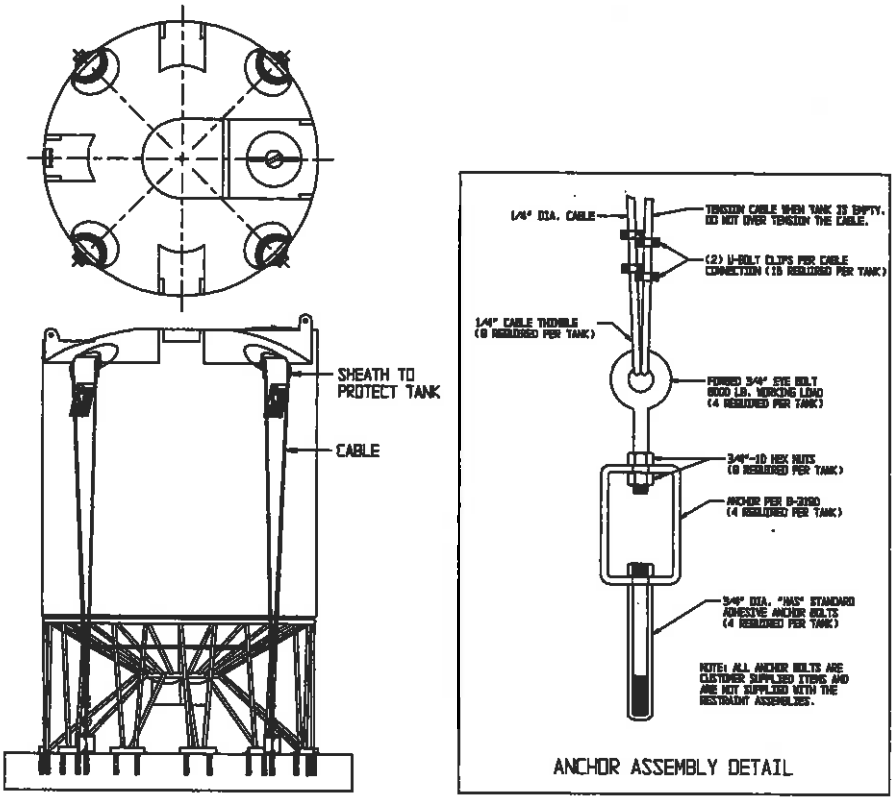

TANK SIZE (GALLONS)	TANK DIAMETER (INCHES)	1.9 SPECIFIC GRAVITY FLUID STAND REQUIRED	STAND ANCHOR BOLTS REQUIRED
500	84	78800	8 EA. 1/2" DIA. "HAS" STANDARD
500	86	79000	8 EA. 1/2" DIA. "HAS" STANDARD
1000	84	78800	8 EA. 1/2" DIA. "HAS" STANDARD
1400	86	79000	8 EA. 1/2" DIA. "HAS" STANDARD
1500	84	78800	8 EA. 1/2" DIA. "HAS" STANDARD
1650	86	78800*	8 EA. 1/2" DIA. "HAS" STANDARD
2000	90	78900	24 EA. 3/4" DIA. "HAS" STANDARD
2500	90	78900	24 EA. 3/4" DIA. "HAS" STANDARD
2600	90	79400	24 EA. 3/4" DIA. "HAS" STANDARD

*NOTE: 78000 STAND ACCEPTABLE FOR SPECIFIC GRAVITIES UNDER 1.7

TANK SIZE (GALLONS)	TANK DIAMETER (INCHES)	1.9 SPECIFIC GRAVITY FLUID STAND REQUIRED	STAND ANCHOR BOLTS REQUIRED
3000	90	78900	24 EA. 3/4" DIA. "HAS" STANDARD
3800	90	78900	24 EA. 3/4" DIA. "HAS" STANDARD
4100	90	79900	24 EA. 3/4" DIA. "HAS" STANDARD
4400	90	79800	24 EA. 3/4" DIA. "HAS" STANDARD
5500	90	79800	24 EA. 3/4" DIA. "HAS" STANDARD
5600	90	79900	24 EA. 3/4" DIA. "HAS" STANDARD
6000	142	79500	24 EA. 3/4" DIA. "HAS" STANDARD
6500	90	79800	24 EA. 3/4" DIA. "HAS" STANDARD
7400	142	79500	24 EA. 3/4" DIA. "HAS" STANDARD
11500	142	79500	24 EA. 3/4" DIA. "HAS" STANDARD

Figure 8.3

8.3.2 Locate the tank and stand on the concrete pad as desired. The pad required for the restraint system must be 24" larger in diameter than the tank diameter for proper application of 3/4" adhesive anchor bolts (assumes 10" edge distance required. Lay out the four anchors provided directly below the tank tie down locations. Make sure all anchors are located so the hole in the anchor aligns with the tank wall. Mark all the anchor bolt locations (stand and anchor positions), remove the stand and anchors and install the required Hilti adhesive model HVA anchor bolts as specified by the assembly drawing and the SII seismic restraint drawing B-3182. These anchor bolts are not provided by the manufacturer and must be purchased by the customer.

8.3.3 Replace the stand and anchors and secure to the concrete pad. Install the 3/4" eyebolts loosely as shown by the drawing. Fasten the tank to the concrete pad with the required cable (make sure the cable sheath is on the cable and located around the lug locations) as shown by the assembly drawing utilizing the cable thimbles and clamps provided. Tension the cable <u>before</u> filling the tank to remove cable looseness. Do not over-tension the cables as this may cause tank damage. The cable tension will change with tank loading and temperature changes - <u>DO NOT</u> re-tension the cables.

8.4 STEEL LADDERS

8.4.1 Steel ladders are designed in accordance with OSHA 1910.27 and are to be mounted next to the tank on a concrete pad at the same elevation as the bottom of the tank. The concrete pad area that the ladder mounts to must be of sufficient size as to comply with OSHA standards regarding proper access to and from the ladder. This should be determined by the construction site engineer based on the specific application. The pad must be of sufficient size to allow proper attachment of 1/4" anchor bolts (check with anchor bolt manufacturer for embedment and edge distance required). The ladder mounting system is designed to allow for tank expansion and contraction due to temperature and loading changes. Using the assembly drawing and table shown in Figure 8.4, verify that all parts are present and assemble accordingly.

NOTE: This ladder is provided for tank inspection only. At no time should the operator step off this ladder onto the tank unless stepping onto an approved work platform with guard rails or utilizing some other approved safety device. Proper safety equipment (i.e. guard rails, safety harness, etc.) must be used to step onto the tank. Consult applicable regulations to determine proper equipment for other than inspection work.

8.4.2 Attach the two pivoting attachment arms to the ladder using 1 ea. 1/2"-13 x 2" hex head bolt and 2 ea. 1/2" - 13 hex nuts. Double nut each bolt by tightening the first nut to 85 ft. - lbs. of torque and then jamming the second nut to the first nut by holding the first nut and tightening the second to 85 ft. - lbs. of torque. Position the ladder on the tank and attach the top pivoting attachment arms to the tank with the ladder attachment tube and cotter pin provided (see Figure 8.4). Position the ladder parallel with the side of the tank and mark the 1/4" anchor bolt locations. Install appropriate 1/4" anchor bolts and attach the bottom of the ladder to the concrete pad. Anchor bolts are not provided by the manufacturer and must be purchased by the customer.

8.5 STEEL LADDER CAGES

8.5.1 Using the assembly drawing shown in Figure 8.5 and the instructions in section 8.5.2, verify that all parts are present and assemble accordingly. These cages are designed for use only with the SII steel ladder design. Cages are required for ladders used to ascend to heights exceeding 20 ft.

NOTE: Assembly is easier if the cages are installed on the ladder before the ladder installation to the tank.

8.5.2 Install the cages loosely using the u-bolts provided starting with the top cage unit (4 ft. unit with a larger bolt pattern). The bottom cage unit must have a larger diameter at the bottom than at the top of the unit and the bottom edge of the unit be located a minimum of 7 feet and a maximum of 8 feet above the ground. When the cage units have been properly located and spaced evenly, tighten the u-bolts securely.

8.6 FRP LADDERS (up to 300" height)

8.6.1 FRP ladders are designed in accordance with OSHA 1910.27 and are to be mounted next to the tank on a concrete pad at the same elevation as the bottom of the tank. The concrete pad area that the ladder mounts to must be of sufficient size as to comply with OSHA standards regarding proper access to and from the ladder. This should be determined by the construction site engineer based on the specific application. The pad must be of sufficient size to allow proper attachment of 5/8" anchor bolts (check with anchor bolt manufacture for embedment and edge distance required). The ladder mounting system is designed to allow for tank expansion and contraction due to temperature and loading changes. Using the assembly drawing and table shown in Figure 8.6, verify that all parts are present and assemble accordingly.

10.1.2 Snyder Industries, Inc. warrants to the purchaser for use that if any manufactured tank product is proven to be defective in material or workmanship within 3 YEARS from the date of original invoice from factory, and Snyder Industries, Inc. is notified within 15 days after such defect is discovered, Snyder Industries, Inc. will (at company option) either replace or repair said part. Snyder Industries, Inc. warrants to the purchaser for use that if any tank fitting, attachment, or accessory product is proven to be defective in material or workmanship within 1 YEAR from the date of original invoice from factory, and Snyder Industries, Inc. is notified within 15 days after such defect is discovered, Snyder Industries, Inc. will (at company option) either replace or repair said part. This Snyder Industries Standard Limited Warranty does not apply to damage resulting from misuse, improper application of recommended materials, neglect, material wear, accident, or improper installation or maintenance. Said part will not be considered defective if it substantially fulfills performance specifications. THE FOREGOING STANDARD LIMITED WARRANTY IS EXCLUSIVE AND IN LIEU OF ALL OTHER WARRANTIES OF MERCHANTABILITY, FITNESS FOR PURPOSE AND OF ANY OTHER TYPE, WHETHER EXPRESSED OR IMPLIED. Snyder Industries, Inc. neither assumes nor authorizes anyone to assume for it any other obligation or liability in connection with said tank product and will not be liable for incidental or consequential damages. THE REMEDIES STATED HEREIN SHALL BE THE EXCLUSIVE REMEDIES AVAILABLE UNDER THIS STANDARD WARRANTY. CLAIMS UNDER THIS STANDARD LIMITED WARRANTY SHALL BE HANDLED UNDER THE SNYDER INDUSTRIES, INC. SERVICE POLICY. Snyder Industries, Inc. will not be responsible for any charges incurred in repairing or servicing any Snyder Industries, Inc. product except as such repairs are made at Snyder Industries, Inc. or by Snyder Industries, Inc. personnel or as approved in writing from Snyder Industries, Inc. Customer Service.

10.2 SII WARRANTY EXCEPTIONS

10.2.1 Distributors and their authorized distribution have the responsibility of calling to the attention of their customers any exceptions to the Snyder Industries, Inc. standard limited warranty, prior to acceptance of an order from the customer for any Snyder Industries, Inc. product.

10.2.2 Due to the uniqueness of tank applications, Snyder Industries, Inc. may offer warranties other than the standard warranty. These warranty statements will be in writing from Snyder Industries, Inc. The warranty period may be longer than 3 years as in the case for purchased extended warranties, or the warranty period may be shorter than 3 years as in the case for certain chemical/material applications. Please consult Snyder Industries, Inc. if you have any questions regarding warranty coverage and/or requirements.

10.3 RETURN MERCHANDISE/WARRANTY CLAIM PROCEDURE

10.3.1 SII has specific procedures for return merchandise and warranty claims. To make a claim, please contact the Customer Service Department at SII by mail, phone or e-mail:

Snyder Industries, Inc.
P.O. BOX 4583
Lincoln, NE 68504
(402) 467-5221
FAX: (402) 467-6493
E-mail: sales@snydernet.com

The following information will be required to assist in filing your claim:

1. Product identification (tank size, part number, serial number, etc.)
2. SII customer order number
3. Name and phone number of person making the claim
4. Distributor/company name, address, and phone number
5. Description of reason for claim
6. Pictures of failure and installation
7. MSDS of chemicals stored
8. Temperature of tank application

GUIDELINES FOR USE AND INSTALLATION

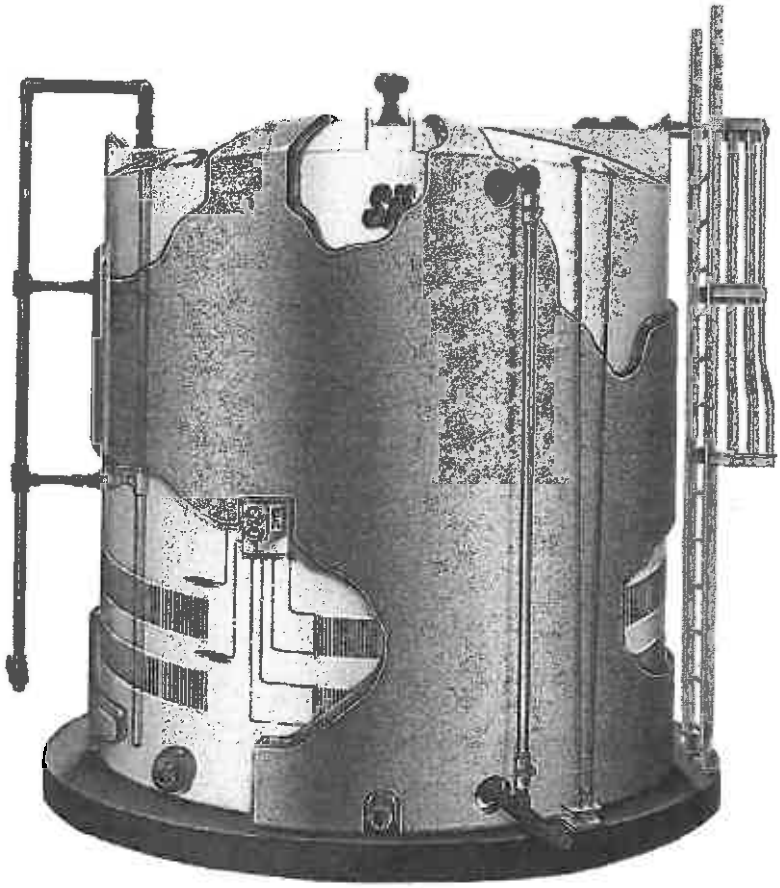

PROVIDING INDUSTRY WITH TANK SOLUTIONS

Protect your warranty – Read these instructions!

SNYDER INDUSTRIES, INC.

P.O. Box 4583 • Lincoln, Nebraska • 68504 • Phone: 402-467-5221
Fax: 402-465-1220 • www.snydernet.com

TABLE OF CONTENTS

1. SAFETY CHECKLIST
2. WARRANTY INFORMATION
3. RECEIVING AND INSPECTING YOUR TANK
4. TANK LOADING, UNLOADING, AND POSITIONING
   - 4.1 HORIZONTAL TANKS
   - 4.2 SMALL VERTICAL TANKS (LESS THAN 2000 GALLON CAPACITY)
   - 4.3 LARGE VERTICAL TANKS (GREATER THAN OR EQUAL TO 2000 GALLONS)
   - 4.4 INSULATED TANKS
   - 4.5 CAPTOR CONTAINMENT TANKS (ADDITIONAL INSTRUCTIONS)
5. PRE-INSTALLATION NOTES
   - 5.1 TANK OPERATING CRITERIA
   - 5.2 FOUNDATIONS AND SUPPORTS
   - 5.3 TANK FITTINGS AND CONNECTIONS
   - 5.4 TESTING AND FINAL INSPECTION
   - 5.5 ACCESSORY PARTS
6. FITTINGS
   - 6.1 THREADED BULKHEAD FITTING
   - 6.2 SELF-ALIGNING THREADED BULKHEAD FITTING
   - 6.3 BOLTED FLANGE FITTING
   - 6.4 BOLTED STAINLESS STEEL FITTING
   - 6.5 SNYDER UNITIZED MOLDED OUTLET - (SUMO™)
   - 6.6 SIPHON TUBE FITTINGS
   - 6.7 UNIFIED FITTING OUTLET - (UFO™)
7. TANK ATTACHMENTS
   - 7.1 U-VENTS
   - 7.2 DOWN PIPES (TANK FITTING SUPPORTED)
   - 7.3 DOWN PIPES (WELDED BOSS SUPPORTED)
   - 7.4 DOWN PIPES (WELDED PE SUPPORTED)
   - 7.5 DOWN PIPES (INDEPENDENTLY SUPPORTED)
   - 7.6 FLEXIBLE SIGHT LEVEL GAGES
   - 7.7 REVERSE LEVEL SIGHT GAGE
   - 7.8 ULTRASONIC LEVEL INDICATOR
   - 7.9 LEAK DETECTOR UNIT (FOR USE WITH CAPTOR CONTAINMENT TANKS ONLY)
   - 7.10 FLANGE ADAPTERS
   - 7.11 FLEXMASTER EXPANSION JOINTS
8. TANK ACCESSORIES
   - 8.1 LATERAL RESTRAINT SYSTEM (FLAT BOTTOM TANKS)
   - 8.2 WIND/SEISMIC TANK RESTRAINT SYSTEM (FLAT BOTTOM TANKS)
   - 8.3 WIND/SEISMIC TANK RESTRAINT SYSTEM (CONE BOTTOM TANKS)
   - 8.4 STEEL LADDERS
   - 8.5 STEEL LADDER CAGES
   - 8.6 FRP LADDERS (UP TO 300" HEIGHT)
   - 8.7 FRP LADDER CAGES
   - 8.8 HORIZONTAL LEG TANK INSTALLATION
   - 8.9 CONE BOTTOM TANK STAND EXTENSIONS
   - 8.10 HEATED TANKS
9. TANK MAINTENANCE
   - 9.1 TANK INSPECTION
10. SII PRODUCT POLICY STATEMENTS
    - 10.1 SII STANDARD LIMITED WARRANTY
    - 10.2 SII WARRANTY EXCEPTIONS
    - 10.3 RETURN MERCHANDISE/WARRANTY CLAIM PROCEDURE

H-3

USGS Design Maps Summary Report

User-Specified Input

Report Title Topok
Fri December 19, 2014 13:32:10 UTC

Building Code Reference Document 2012 International Building Code
(which utilizes USGS hazard data available in 2008)

Site Coordinates 34.71399°N, 114.51483°W

Site Soil Classification Site Class D – "Stiff Soil"

Risk Category IV (e.g. essential facilities)

USGS-Provided Output

S_S =	0.232 g	S_{MS} =	0.372 g	S_{DS} =	0.248 g
S_1 =	0.122 g	S_{M1} =	0.282 g	S_{D1} =	0.188 g

JW/IN 1%

For information on how the SS and S1 values above have been calculated from probabilistic (risk-targeted) and deterministic ground motions in the direction of maximum horizontal response, please return to the application and select the "2009 NEHRP" building code reference document.

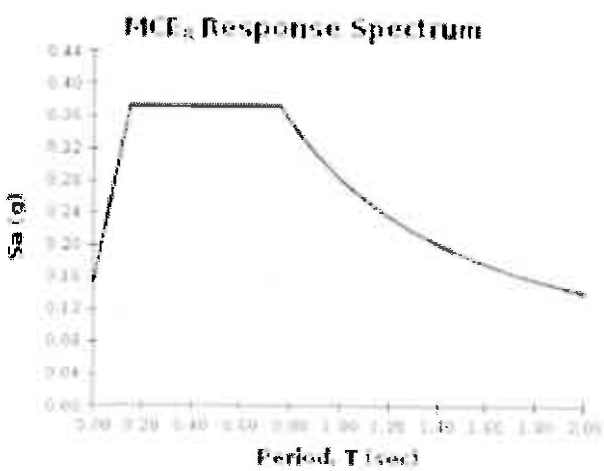

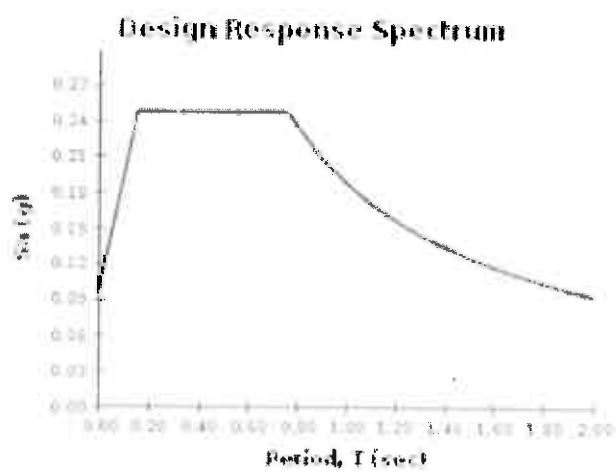

H-4

15,000 GAL / 7.48 GAL/CF = 2005.35 CF / (π × 11.75^{FT}^{2} / 4)
= 18.49^{FT} ← USE 18.5^{FT} WATER HEIGHT

15,000 GAL × 8.345#/GAL = 125,175# + 2,500# TANK DL
= 127,675#

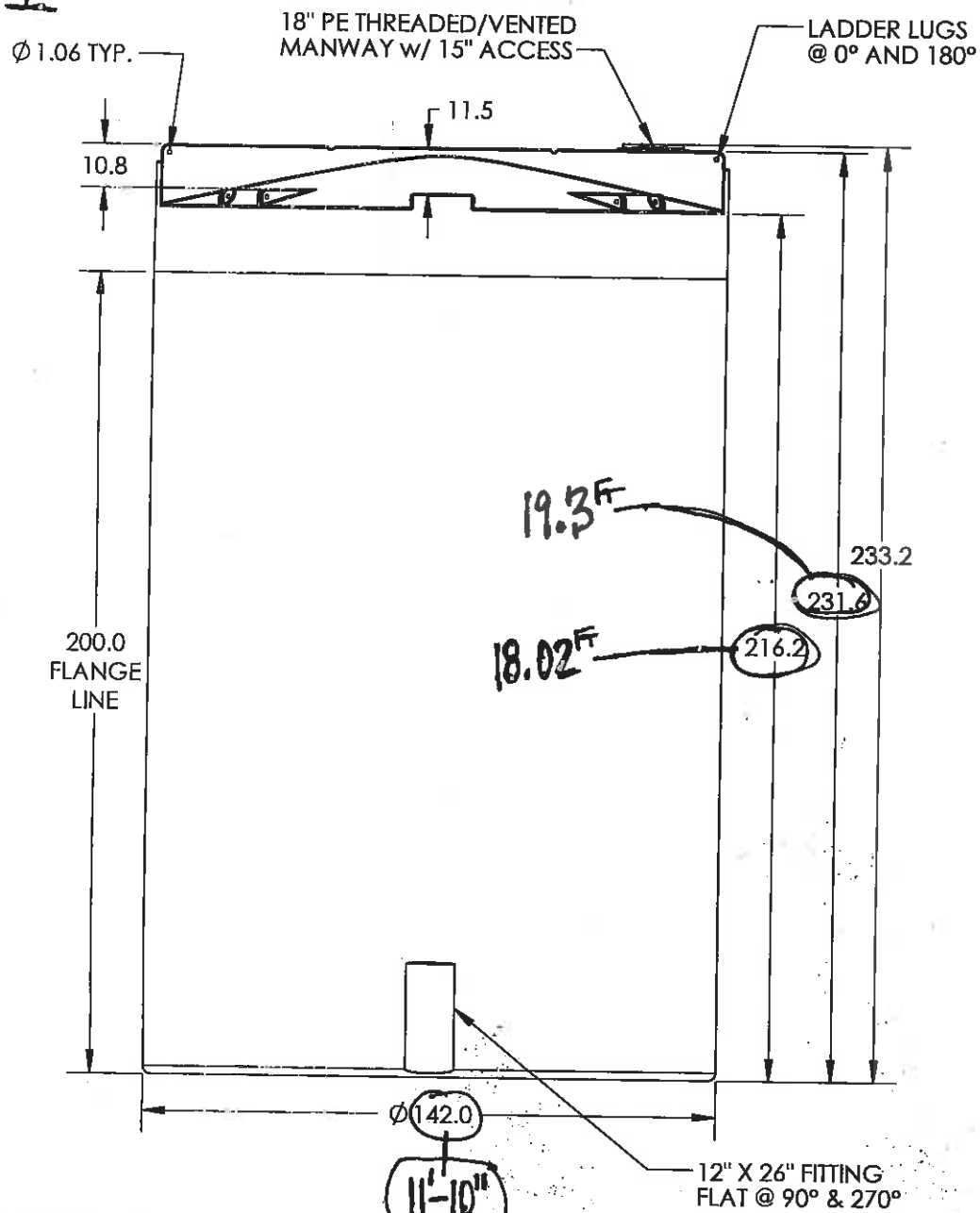

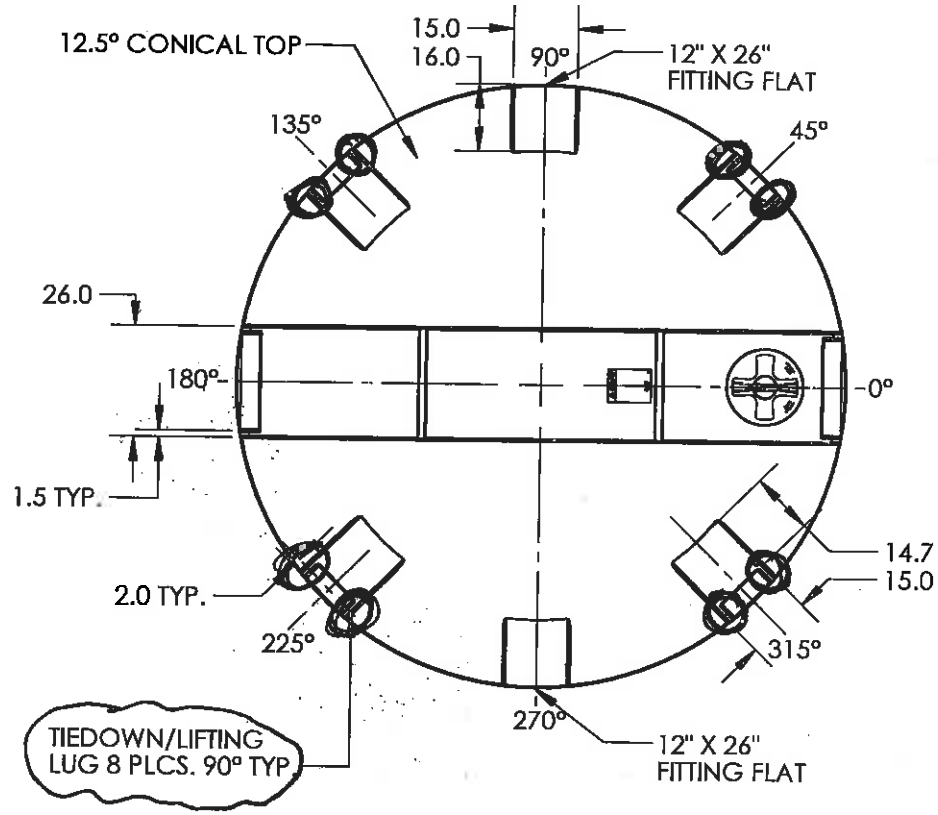

*ALL EXTERNAL PIPING MUST BE INDEPENDENTLY SUPPORTED.
*ONLY BASE FITTINGS TO BE LEFT INSTALLED AT TIME OF SHIPMENT PER SII PROCEDURE.
*Consult Snyder's Guidelines for Use and Installation prior to delivery.
Available on-line at http://www.snyderindustriestanks.com/Technical
DIMENSIONS ARE IN INCHES, NOMINAL, & SUBJECT TO CHANGE WITHOUT NOTICE.
DIMENSIONS ON ROTATIONAL MOLDED PARTS ARE SUBJECT TO A ± 3% TOLERANCE.

DO NOT SCALE	DRAWN BY	DATE	SNYDER INDUSTRIES, INC.	TITLE: ASM TK 15000 VDT X 142 (GALLONS)	REVISION A
STATUS: Released	ETS	07/25/[illegible]	4700 Fremont Street Lincoln, NE 68504 (402) 467-5221 www.snydernet.com		SHEET 1 OF 1
© SNYDER INDUSTRIES INC., [illegible]				PART NO. 5370000N___01	ENG. ID. D001074

ALL DIMENSIONS, DESIGNS, AND INFORMATION ON THIS PRINT MUST BE CONSIDERED PROPRIETARY TO SNYDER INDUSTRIES, INC. AND MAY NOT BE USED, COPIED, OR DISTRIBUTED WITHOUT WRITTEN PERMISSION OF AN OFFICER (OR HIS AGENT) OF THE FIRM.

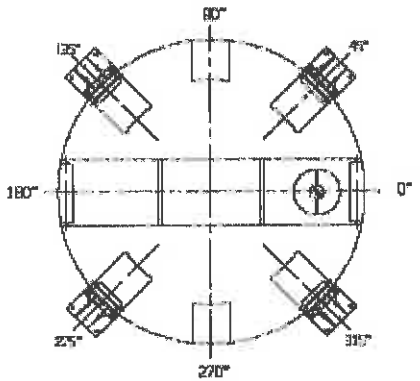

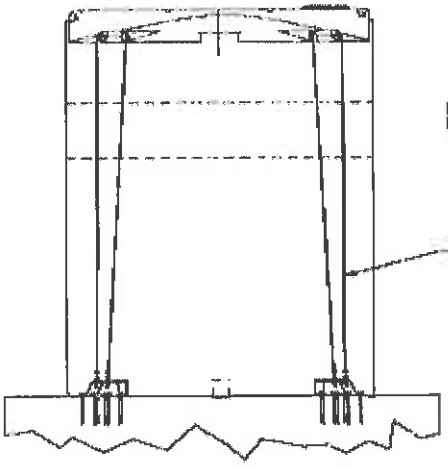

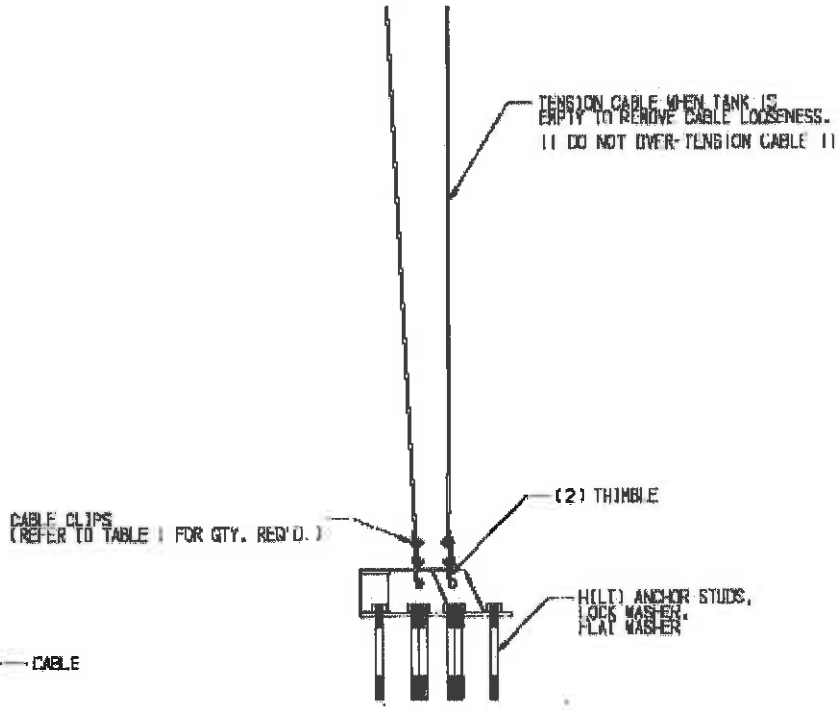

CODES:
- CBC 2010
- IBC 2009
- ASCE 7-05
- AISC 13th EDITION

SEISMIC DESIGN:
- Zip Code = 90701, Site class D - Fa=1.0, Fv=1.5,
- Ss = 1.4, S1 = 0.5, I = 1.5, R = 3.0
- Fp=(Vi+Wi+Vc+Wc)/(Wi+Wc+Sb) = 0.445 W

WIND DESIGN:
- IBC/CBC - 150 MPH
- Qz = 0.00256KzKztKdV^2I = 58.14 PSF
- (Kz = 0.85, Kzt = 1.0, Kd = 0.85, I = 1.25)

GENERAL:
1. ALL CONSTRUCTION SHALL MEET LOCAL BUILDING CODE REQUIREMENTS AND BE APPROVED BY THE BUILDING OFFICIAL.
2. THESE GUIDELINES HAVE BEEN PROVIDED TO SPECIFY THE RESTRAINT RECOMMENDATIONS FOR SMALLER INDUSTRY BULK STORAGE TANKS.

CONCRETE:
1. CONCRETE SHALL HAVE A MINIMUM DESIGN AS PER DRAWING REFERENCED IN SPECIFICATION CHART BELOW.
2. CONCRETE PAD DESIGN SHOULD BE REVIEWED AND APPROVED BY THE BUILDING OFFICIAL BASED ON SPECIFIC APPLICATION AS OTHER DESIGN PARAMETERS ARE POSSIBLE DEPENDING UPON SITE CONDITIONS.

STRUCTURAL STEEL:
1. ALL STRUCTURAL STEEL COMPONENTS SHALL BE NEW AND OF BASIC OPEN HEARTH PROCESS STEEL CONFORMING TO ALL APPLICABLE REQUIREMENTS OF ASTM A36 (STRUCTURAL STEEL FOR BRIDGES AND BUILDINGS - Fy = 36,000 PSI.).
2. ALL ARC WELDING ELECTRODES SHALL CONFORM TO ASTM A233 FOR STEEL ARC WELDING ELECTRODES. ELECTRODES SHALL BE AS RECOMMENDED BY THE MANUFACTURER FOR THE POSITIONS AND OTHER CONDITIONS OF ACTUAL USE. WELDING SHALL CONFORM TO REQUIREMENTS OF AMERICAN WELDING SOCIETY AWS D1.1.
3. ALL SHARP EDGES AND CORNERS SHALL BE REMOVED ON ALL STRUCTURAL STEEL COMPONENTS.
4. CABLES TO BE 7X19 STRANDED CORE CONSTRUCTION SIZED PER CHART. MATERIAL TO BE SPECIFIED BY CUSTOMER (PROPER MINIMUM BREAKING STRENGTH EQUAL TO OR GREATER THAN 304 SS RATING).
5. ANCHOR BOLTS TO BE HILTI ADHESIVE ANCHORS, MODEL HIT-RE 500-SD WITH SIZE, MATERIAL, AND EMBEDMENT AS SPECIFIED PER SPECIFICATION CHART BELOW.
   ALL OTHER FASTENER MATERIALS MUST CORRESPOND TO THE TYPE OF ANCHOR SELECTED.

H-4A

Lotycz, Matt

From: O'Brien, Maureen
Sent: Wednesday, December 10, 2014 5:03 PM
To: Lotycz, Matt
Cc: Eckel, Caroline H.; Baxter, Jonathan; Sidoti, John
Subject: RE: Utility Pad DWG File
Attachments: 15,000 gal snyder tank.PDF; Generator Dimensional drawing 2 adv7853.pdf; Diesel Generator g5373.pdf; Generator Dimensional drawing 1 adv7853.pdf; cooper pad mount transformer.pdf; seismic restraint.JPG

Here is the cut sheet and seismic info for the 15,000 gal FSW (Now fire suppression water) tank. The seismic info is for all of the snyder tanks, this was all I could find from Snyder on the website. I can ask for more if you need it.

I've also attached the cutsheets for the transformer and generator. I pulled the dimensions for each directly from these sheets, so they should be accurate.

Andy is updating the utility pad right now to add some more space in between the tanks so I will send you the updated dwg file as soon as I receive it.

Let me know if you need anything else!

Thanks,
Maureen

From: Sidoti, John
Sent: Wednesday, December 10, 2014 3:51 PM
To: Lotycz, Matt
Cc: Eckel, Caroline H.; O'Brien, Maureen; Baxter, Jonathan
Subject: RE: Utility Pad DWG File

I'm ok with where the panels sit right now—at this point there is nothing in front of them (on the north side of the pad). We would have 4' required in front of them, which we appear to have.

John

John Sidoti, PE | Electrical Engineer | john.sidoti@arcadis-us.com

ARCADIS U.S., Inc. | 222 South Main St., Suite 300 | Akron, OH, 44308
T: 330.434.1995 (Main) | 330.515.5682 (Direct)
Connect with us! www.arcadis-us.com | LinkedIn | Twitter | Facebook

ARCADIS, Imagine the result
Please consider the environment before printing this email.

From: Lotycz, Matt
Sent: Wednesday, December 10, 2014 4:48 PM
To: O'Brien, Maureen; Baxter, Jonathan
Cc: Sidoti, John; Eckel, Caroline H.
Subject: RE: Utility Pad DWG File

Maureen and Jon – Couple of questions:

1. Just wanted to confirm if you are ok with the Power Distribution Panel and Telecom Panel sitting at the very edge of the Pad? I wasn't sure if you wanted 3'-0" of distance around (to the top side of those panels) those panels for "ease of maintenance (see attached screen image below).
2. Are all the tanks, pumps, transformer and generator all shown to scale per cutsheets?

Maureen and/or Carol - Can you get me a cutsheet on the 15,000 Fire Water Tank and Bladder tank by tomorrow morning. Need plan view size, section view, seismic anchorage and hold-downs and total weight. The only tank info I have received to date is the 5000 gal tanks from Caroline. Thanks.

John S - Can you get me a cutsheet on the transformer and generator by tomorrow morning. Need plan view size and weight.

Let me know as I will be getting started on this tomorrow. Thanks.

Matt

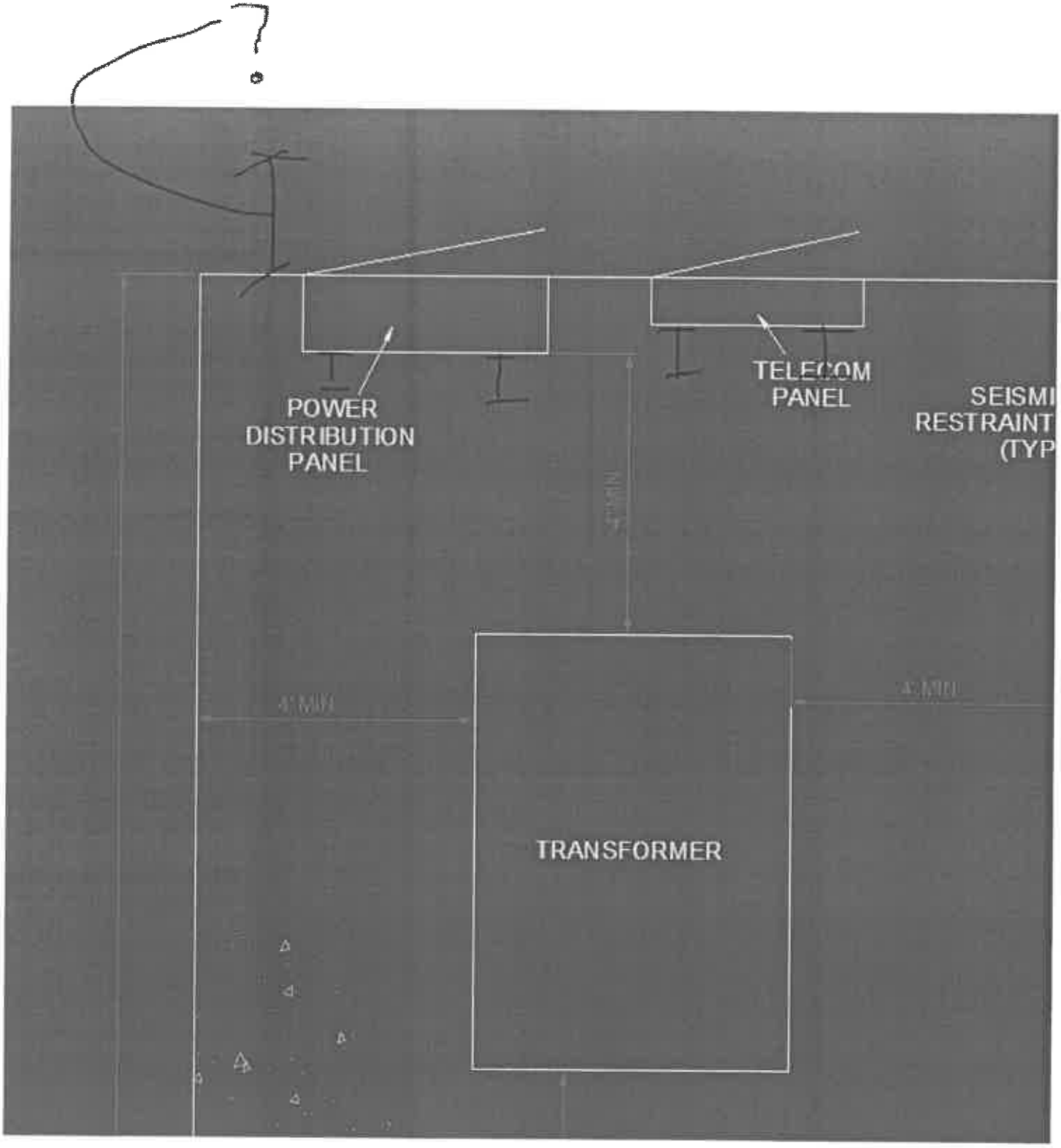

From: O'Brien, Maureen
Sent: Wednesday, December 10, 2014 4:37 PM
To: Lotycz, Matt
Cc: Baxter, Jonathan
Subject: Fw: Utility Pad DWG File

Utility Pad to use as an xref.

Let me know if you need anything else!

Thanks,
Maureen

From: Andy Wottrich <awottrich@eticeng.com>
Sent: Wednesday, December 10, 2014 3:35 PM
To: O'Brien, Maureen
Subject: RE: Utility Pad DWG File

Here you go...

Andy Wottrich
Corporate Support - CAD/Graphics Manager
awottrich@eticeng.com
www.eticeng.com
ETIC Engineering, Inc.
2285 Morello Ave.
Pleasant Hill, CA 94523
Tel: 925-602-4710 x2140
Fax: 925-602-4720
Mobile: 925-285-1075

From: O'Brien, Maureen [mailto:Maureen.O'Brien@arcadis-us.com]
Sent: Wednesday, December 10, 2014 1:28 PM
To: Andy Wottrich
Cc: Brent Searcy; Baxter, Jonathan; Lotycz, Matt
Subject: Utility Pad DWG File

Hi Andy,

We are looking to use the dwg of the utility pad as an xref for a structural drawing. Can you please send that our way?

Thank you!
Maureen

Maureen O'Brien | Remediation Specialist | Maureen.O'Brien@arcadis-us.com

ARCADIS U.S., Inc. | 126 N. Jefferson St., Suite 400 | Milwaukee, WI 53202
T: 414.277.6205
www.arcadis-us.com

ARCADIS, Imagine the result
Please consider the environment before printing this email.

Reference:G:\Project\RC000753.0008\Dept\Structural\MathCAD\Seismic Calculations\Arcadis_Units.mcd(R)

Topok, California 15,000 Gal Tank Seismic Loads

References

American Institute of Steel Construction
AISC 13th edition construction manual.
AISC 360-05 Steel structure design specification.
American Society of Civil Engineers
ASCE 7-10
California Building Code
CBC 2013
USGS Seismic Design Maps -
http://earthquake.usgs.gov/hazards/designmaps/usdesign.php
Earthquake Hazard Program - Seismic Design Maps and Tools for Buildings
Ground Motion Parameter Calculator - Version 3.0.1, last updated 12 July 2012.
Performance Pipe
First Edition - Field Handbook, August 2009, Chevron Phillips Chemical Co.
American Water Works Association
AWWA D103-09 - Bolted Carbon Steel Tanks For Water Storage

Goal of this package of calculations

This set of calculations has been performed for the following purposes:

1. To calculate seismic response coefficients (C_s) that can be applied to 15,000 Gal tank operational weights to determine lateral load effects on anchorage due to seismic events.

Summary of Findings:

1. Calculations use ASCE 7-10 and AWWA D103-09 as two methods in determining seismic response coefficients (C_s).

Determine Acceleration Coefficients

Zip code of work: [redacted] Use with USGS ground motion calculator

$S_1 := 0.120$ $S_s := 0.230$

From ASCE 7, chapter 11 (below):

11.4.2 Site Class. Based on the site soil properties, the site shall be classified as Site Class A, B, C, D, E, or F in accordance with Chapter 20. Where the soil properties are not known in sufficient detail to determine the site class, Site Class D shall be used unless the authority having jurisdiction or geotechnical data determines Site Class E or F soils are present at the site.

Use Site Class "D"

ASCE 7-10 Table 11.4-2

Use

$F_v := 2.4$

ASCE 7-10 Table 11.4-1

Use

$F_a := 1.6$

$S_{DS} := \frac{2}{3} \cdot F_a \cdot S_s$ $S_{DS} = 0.25$

$S_{D1} := \frac{2}{3} \cdot F_v \cdot S_1$ $S_{D1} = 0.19$

Determine Seismic Design Category

ASCE 7-10 Table 11.6-1 & 2 SDC "C" for Sds and "D" for Sd1 nce occupancy IV $I_E := 1.5$

Analysis based on AWWA D103-09: Ground Supported Flat Bottom Tanks

See attached AWWA Standard

$D := 11.83ft$ Tank Diameter $V := 15000gal$ Tank Capacity

$H := \frac{4 \cdot V}{\pi \cdot D^2}$ Fluid height in Tank $H = 18.24ft$

$T_c := 2 \cdot \pi \cdot \sqrt{\frac{D}{3.68 \cdot g \cdot \tanh\left(3.68 \cdot \frac{H}{D}\right)}}$ $T_c = 1.99s$ First mode of sloshing wave period AWWA EQ 14-18

$T_L := 8s$ AWWA Figure 17 $T_s := \frac{S_{D1}}{S_{DS}} = 0.78\ s$ $C_t := .02$ $x := .75$

$T_a := C_t \cdot H^x$ $T_i := T_a$ $T_i := 0.14s$

$0 < T_i < T_s$ $S_{ai} := S_{DS}$ per AWWA 14.2.8.6.1 $S_{ai} = 0.25$ ---Use

FYI T.s < T.i <T.L $S_{ai2} := \frac{S_{DS}}{T_i} = 1.69$ ▮ > ▮ = ▮ $S_{DS} = 0.25$ ---Use

$R_i := 3$ per AWWA table 6, Impulsive component of mechanically anchored tanks

$R_c := 1.5$ per AWWA table 6, Convective component of mechanically anchored tanks

$A_i := \max\left(\frac{S_{ai} \cdot I_E}{1.4 \cdot R_i}, \frac{0.36 \cdot S_1 \cdot I_E}{R_i}\right)$ $A_i = 0.09$ impulsive acceleration

$T_c < T_L$ $S_{ac} := \frac{1.5 \cdot S_{D1} \cdot 1s}{T_c}$ $S_{ac} = 0.15$ ▮ < ▮ $S_{DS} = 0.25$ AWWA EQ 14-12

$A_c := \frac{S_{ac} \cdot I_E}{1.4 \cdot R_c}$ $A_c = 0.1$ Convective acceleration

Use this value (Controls)

$C_{sAWWA} := \sqrt{A_i^2 + A_c^2}$ $C_{sAWWA} = 0.14$ Check this value against ASCE 7-10 per Chapter 15

Load analysis of Ground Supported Tanks containing Liquid: ASCE 7-10

Refer to ASCE 7-10, chapter 15

From 15.4.1b of ASCE 7

Non-building structures shall be designed in compliance with Sections 15.5 and 15.6 to resist minimum seismic lateral forces that are not less the requirements of Section 12.8 with the following additions and exceptions identified in 15.4.1-1 & 2.

Table 15.4-2 - Structures not similar to buildings

For Flat bottom tanks, Bolted Steel, see Design and Detailing Requirements of 15.7 $R := 3.0$ Mechanically anchored tank. See Table on next sheet.

Determine Fundamental Period of Tank:

$D = 11.83\,ft$ Tank Diameter

$V = 15000\,gal$ Tank Capacity

$H = 18.24\,ft$ Fluid height in Tank

$T := T_c$ $T = 1.99\,s$ Tank Period

$S_1 = 0.12$ $I_E = 1.5$ $R = 3$

Per ASCE 7-05 15.4.1.2 $C_{smin1} := .044 S_{DS} \cdot I_E = 0.02$ ASCE 7 EQ 15.4-1

which is greater than 0.03 MIN

$C_{smin2} := \dfrac{0.8 \cdot S_1}{\frac{R}{I_E}}$ $C_{smin2} = 0.05$ ASCE 7 EQ 15.4-2 Not Applicable

because $S_1 = 0.12$ $< S_{1a} := 0.6$

$T_a := T \cdot \dfrac{1}{s}$ $T_a = 1.99$

From Section 12.8 ASCE 7-10 $C_s := \dfrac{S_{DS}}{\frac{R}{I_E}}$ $C_s = 0.12$

$R = 3$ $T_L := 12$ $C_{smax} := \dfrac{S_{D1}}{T_a \cdot \frac{R}{I_E}}$ $C_{smax} = 0.05$ ignore

Min Base Shear Force to foundation per 12.8 $V := C_s \cdot W$ $V = 0.12W$

Controlling Seismic Response Coefficient is Cs =0.14 of AWWA D103

$W_i := 127.675kip$ Operating Weight of EQ Tank (tank DL and water)

From Section 12.8 ASCE 7-10 $V := C_{sAWWA} \cdot W_i = 17.32 \cdot kip$

ASCE 7-10 Section 15.7.6

$(0 < T_i < T_s)$ $(S_{ai} := S_{DS})$ per ASCE 7-10 Eq 15.7-7 $(S_{ai}) = 0.25$

$T_c < T_L$ $S_{ac} := \frac{1.5 \cdot S_{D1} \cdot 1s}{T_c}$ per ASCE 7-10 Eq 15.7-10

$S_{ac} = 0.15$, < , $1.5x \quad S_{DS} = 0.25$

$W_i := 127.675kip$ Operating Weight of EQ Tank (tank DL and water)

$V_i := \frac{(S_{ai} \cdot W_i)}{\left(\frac{R}{I_E}\right)} = 15661.47\,lbf$ per ASCE 7-10 Eq 15.7-5

$W_c := 25.14kip$ Weight of Effective Mass of First Mode of Sloshing

$V_c := \frac{(S_{ac} \cdot I_E \cdot W_c)}{1.5} = 3645.5\,lbf$ per ASCE 7-10 Eq 15.7-6

Sesimic Base Shear = $V_t := \left(V_i^2 + V_c^2\right)^{0.5} = 16.08 \cdot kip$

Sum of the squares per ASCE 7-10 Section 15.7.6.1-e

Sliding Resistance (un-anchored) per ASCE 7-10 Eq 15.7-14

$V_t < W_t \tan(30deg)$ $W_t := 127.65kip$ $\tan(30deg) = 0.58$

$V_t = 16.08 \cdot kip$, < , $W_t \tan(30deg) = 73.7 \cdot kip$ OK

Job Title: Topok, CA - 15,000 Gal Fire Water Tank

Design of Water Storage Tanks in Seismic Regions

$I_E := 1.5$	SEISMIC IMPORTANCE FACTOR
$F_a := 1.6$	SHORT PERIOD SITE COEFFICIENT
$F_v := 2.4$	LONG PERIOD SITE COEFFICIENT
$S_s := 0.230$	MAPPED MAX. CONSIDERED EARTHQUAKE SPECTRAL RESPONSE ACCELERATION AT 0.2 SEC PERIOD FOR SITE CLASS B
$S_1 := 0.120$	MAPPED MAX. CONSIDERED EARTHQUAKE SPECTRAL RESPONSE AT 1-SEC PERIOD FOR SITE CLASS B
$S_{MS} := F_a \cdot S_s = 0.37$	MAXIMIMUM CONSIDERED EARTHQUAKE SPECTRAL RESPONSE ACCELERATION AT 0.2 SEC PERIOD
$S_{M1} := F_v \cdot S_1 = 0.29$	MAXIMUM CONSIDERED EARTHQUAKE SPECTRAL RESPONSE ACCELERATION AT 1 SEC PERIOD
$U := \frac{2}{3}$	SCALING FACTOR TO SCALE THE MAX. CONSIDERED EARTHQUAKE RESPONSE ACCELERATION TO THE DESIGN RESPONSE ACCELERATION
$S_{DS} := U \cdot S_{MS} = 0.25$	DESIGN EARTHQUAKE SPECTRAL RESPONSE ACCELERATION AT 0.2-SEC PERIOD
$S_{D1} := U \cdot S_{M1} = 0.19$	DESIGN EARTHQUAKE SPECTRAL RESPONSE ACCELERATION AT 1-SEC PERIOD

$$T_s := \frac{S_{D1}}{S_{DS}} = 0.78$$

$T_i := 0.145$ $T_L := 8$

$$S_{ai} := \begin{cases} S_{DS} & \text{if } 0 \le T_i \le T_s \\ \left(\frac{S_{D1}}{T_i}\right) & \text{if } T_s \le T_i \le T_L \\ \frac{T_L \cdot S_{D1}}{T_i^2} & \text{otherwise} \end{cases}$$

DESIGN SPECTRAL RESPONSE ACCELERATION FOR IMPULSIVE COMPONENTS AT THE NATURAL FREQUENCY OF THE STRUCTURE

$S_{ai} = 0.25$

$K := 1.5$

DAMPING SCALING FACTOR

$D := 11.83ft$ $Volume := 15000gal$ $H := \frac{4 \cdot Volume}{\pi \cdot D^2} = 18.24 \cdot ft$ $H_{tank} := 18.24ft$

$$T_c := \frac{1}{s} \cdot 2 \cdot \pi \cdot \sqrt{\frac{D}{3.68 \cdot g \cdot \tanh\left(\frac{3.68 \cdot H}{D}\right)}} = 1.99$$

$$S_{ac} := \begin{cases} \frac{K \cdot S_{D1}}{T_c} & \text{if } T_c \le T_L \\ \frac{K \cdot T_L \cdot S_{D1}}{T_c^2} & \text{otherwise} \end{cases}$$

DESIGN SPECTRAL RESPONSE ACCELERATION FOR THE CONVECTIVE COMPONENT AT THE FIRST MODE SLOSHING WAVE PERIOD

$S_{ac} = 0.15$

$R_i := 3$ $R_c := 1.5$ $G := 1.0$ *SPECIFIC GRAVITY OF WATER*

Mechanically-Anchored

$$A_i := \max\left[\left(\frac{S_{ai}\cdot I_E}{1.4\cdot R_i}\right),\left(\frac{0.36\cdot S_1\cdot I_E}{R_i}\right)\right] = 0.09$$

IMPULSIVE DESIGN ACCELERATION

$$A_c := \frac{S_{ac}\cdot I_E}{1.4\cdot R_c} = 0.1 \qquad \frac{D}{H} = 0.65 > 1.33$$

CONVECTIVE DESIGN ACCELERATION

$$W_t := 62.4pcf\cdot G\cdot H\cdot\left(\frac{\pi\cdot D^2}{4}\right) = 125.13\cdot kip$$

TOTAL WEIGHT OF TANK CONTENTS

$$W_c := 0.230\cdot\frac{D}{H}\cdot\tanh\left(3.67\cdot\frac{H}{D}\right)\cdot W_t = 18.66\cdot kip$$

WEIGHT OF EFFECTIVE MASS OF FIRST MODE OF SLOSHING

$$W_i := \begin{cases} \dfrac{\tanh\left(\dfrac{0.866\cdot D}{H}\right)}{\left(\dfrac{0.866\cdot D}{H}\right)}\cdot W_t & \text{if } \dfrac{D}{H} \ge 1.333 \\ W_t\left(1.0 - \dfrac{0.218\cdot D}{H}\right) & \text{otherwise} \end{cases}$$

WEIGHT OF EFFECTIVE MASS OF TANK CONTENTS THAT MOVES WITH TANK SHELL

$$W_i = 107.44\cdot kip$$

$$X_i := \begin{cases} 0.375\cdot H & \text{if } \dfrac{D}{H} \ge 1.333 \\ \left(0.5 - \dfrac{0.094\cdot D}{H}\right)\cdot H & \text{otherwise} \end{cases}$$

HEIGHT FROM BOTTOM OF SHELL TO CENTROID OF LATERAL SEISMIC FORCE APPLIED THROUGH THE IMPULSIVE WEIGHT

$$X_i = 8.01\cdot ft$$

$$X_c := \left[1.0 - \frac{\cosh\left(\dfrac{3.67\cdot H}{D}\right) - 1}{\left(\dfrac{3.67\cdot H}{D}\right)\cdot\sinh\left(\dfrac{3.67\cdot H}{D}\right)}\right]\cdot H = 15.04\cdot ft$$

HEIGHT FROM BOTTOM OF SHELL TO THE CENTROID OF LATERAL SEISMIC FORCE APPLIED TO THE EFFECTIVE CONVECTIVE WEIGHT

$$X_s := 0.5\cdot H_{tank} = 9.12\cdot ft$$

HEIGHT FROM BOTTOM OF SHELL TO CENTER OF MASS OF TANK

$W_s := 1.7kip$

$W_r := 400lbf$

$H_t := H_{tank} = 18.24 \cdot ft$

$$M_s := \sqrt{\left[A_i \cdot \left(W_s \cdot X_s + W_r \cdot H_t + W_i \cdot X_i\right)\right]^2 + \left(A_c \cdot W_c \cdot X_c\right)^2}$$

$M_s = 82.68 \cdot ft \cdot kip$

DESIGN OVERTURNING MOMENT AT THE BOTTOM OF THE SHELL CAUSED BY HORIZONTAL DESING ACCELERATION

$W_f := 400lbf$

WEIGHT OF TANK BOTTOM

$$X_{cmf} := \left[1.0 - \frac{\cosh\left(\frac{3.67 \cdot H}{D}\right) - 1.937}{\left(\frac{3.67 \cdot H}{D}\right)\sinh\left(\frac{3.67 \cdot H}{D}\right)}\right] \cdot H = 15.06 \cdot ft$$

HEIGHT FROM BOTTOM OF SHELL TO THE CENTROID OF THE EFFECTIVE CONVECTIVE WEIGHT ADIJUSTED TO FOR VARYING BOTTOM PRESSURES

$$V_F := \sqrt{\left[A_i \cdot \left(W_s + W_r + W_f + W_i\right)\right]^2 + \left[\left(A_c \cdot W_c\right)^2\right]}$$

$V_F = 9.82 \cdot kip$

DESIGN SHEAR AT THE TOP OF THE FOUNDATION DUE TO HORIZONTAL DESIGN ACCELERATION

$M_s = 82.68 \cdot ft \cdot kip$

DESIGN OVERTURNING MOMENT AT TOP OF THE FOUNDATION FOR TANKS SUPPORTED BY RINGWALL FOUNDATIONS

$$X_{imf} := \begin{cases} 0.375 \cdot \left[1.0 + 1.333\left(\dfrac{0.866 \cdot \frac{D}{H}}{\tanh\left(\frac{0.866 \cdot D}{H}\right)} - 1.0\right)\right] \cdot H & \text{if } \dfrac{D}{H} \geq 1.333 \\ \left[\left(0.50 + 0.06\dfrac{D}{H}\right)H\right] & \text{otherwise} \end{cases}$$

$X_{imf} = 9.83 \cdot ft$

$$M_{mf} := \sqrt{\left[A_i \cdot \left(W_s \cdot X_s + W_r \cdot H_t + W_i \cdot X_{imf}\right)\right]^2 + \left(A_c \cdot W_c \cdot X_{cmf}\right)^2}$$

$M_{mf} = 98.93 \cdot ft \cdot kip$ *DESIGN OVERTURNING MOMENT AT TOP OF THE FOUNDATION FOR TANKS SUPPORTED BY MAT FOUNDATIONS*

OVERTURNING RATIO

$w_t := 45.7plf$

the equations may not be meant to include units? as below

$G := 1 \quad t_b := .375 \quad F_y := 36000 \quad H := 18 \quad D := 11.83$

$w_L := 7.9 \cdot t_b \cdot \sqrt{(F_y \cdot H \cdot G)} = 2384.77 \qquad W_{Lmax} := 1.28 \cdot H \cdot D \cdot G = 272.56$

Therefore $w_{Luse} := 272.56plf$

$A_v := 0.14 \cdot S_{DS} = 0.03$

$$J := \frac{M_s}{\left[D^2 \cdot \left[w_t \cdot \left(1 - .4 \cdot A_v\right) + w_{Luse}\right]\right]} = \blacksquare \cdot ft^2 \qquad 1.859\blacksquare > \blacksquare \quad 0.785$$

Therefore, there is shell uplift due to overturning moment and the tank needs to be anchored into the slab

SLIDING CHECK

$V_{allow} := \tan(30°) \cdot \left(W_s + W_r + W_i + W_c\right) \cdot \left(1 - 0.4A_v\right) = 73 \cdot kip \qquad \blacksquare > \blacksquare \quad V_F = 9.82 \cdot kip$

Therefore, allowable lateral shear is greater than design shear at the top of the foundation due to horizontal design acceleration V.F and therefore a self-anchored tank is acceptable

ARCADIS

SUBJECT: TOPOK - UTILITY PAD

JOB NO:

BY: MSL DATE: 12/19/14

CHKD: DATE:

PAGE H-7

SHEET 1

(15,000 GAL TANK CON'T)

WIND LOADS = $q_z = 0.00256\, K_z K_{zt} K_d V^2 = 28.30$ psf FACT

K_z: 0.88 ~ 18ft TABLE 29.3-1; K_{zt}: FIGURE 26.8-1 (1.0); K_d: 0.95 BOUND – TABLE 26.6-1; V: 115 mph

ASCE 7-10 CHAPT 29 – WIND LOADS ON OTHER STRUCTURES – MWFRS

$F = q_z G C_f A_f = (28.3\text{psf})(0.85)(0.73)(11.83^{ft} \times 19.3^{ft}) = 4.01^{K}$ FACT

G: 0.85; C_f: FIGURE 29.5-1 ~ $D\sqrt{q_z} = 62.9 > 2.5$, $h/D = 1.63$, ROUGH, $C_f = 0.73$

LOAD COMBINATIONS (ASCE 7-10 – 2.4 ALLOWABLE & 2.3 FACTORED)

(2.4 ALLOWABLE LOADS)

(5) $D + F + 0.7E \rightarrow (1.0 + 0.14 S_{DS})D + F + 0.7E =$ ($1.0 + 0.14 S_{DS}$: 1.034; D: 2500#; F: 125,175#; $0.7E$: 0.7×17.32^{K})

$= 127{,}760^{\#} \downarrow$ & $12.12^{K} \rightarrow$ @ 18.5ft/2 ARM

(7) $0.6D + 0.6W \rightarrow 0.6(2500^{\#}) \downarrow + 0.6(4010^{\#}) \rightarrow$

$= 1500^{\#} \downarrow$ & $2406^{\#} \rightarrow$ @ 19.3ft/2 ARM

(8) $0.6D + 1.0F + 0.7E \rightarrow (0.6 - 0.14 S_{DS})D + 1.0F + 0.7E$ ($0.565D$)

$= 126.59^{K} \downarrow$ & $12.12^{K} \rightarrow$ @ 18.5ft/2 ARM

(2.3 FACTORED LOADS)

(5) $1.2D + 1.0F + 1.0E \rightarrow (1.2 + 0.2 S_{DS})D + 1.0F + 1.0E$ ($1.2 + 0.2 S_{DS}$: 1.249)

$= 128.28^{K} \downarrow$ & $17.32^{K} \rightarrow$ @ 18.5ft/2 ARM

(6) $0.9D + 1.0W \rightarrow 0.9(2500^{\#}) \downarrow + 1.0(4010^{\#}) \rightarrow$

$2250^{\#} \downarrow$ & $4010^{\#} \rightarrow$

(7) $0.9D + 0.9F + 1.0E \rightarrow [(0.9 - 0.2 S_{DS})D + F]_{CONSERV} + 1.0E$ ($0.9 - 0.2 S_{DS}$: 0.851)

$= 110.78^{K} \downarrow$ & 17.32^{K} @ 18.5ft/2 ARM

AGM Form 30 12-01

ARCADIS

SUBJECT: TOPOK- UTILITY PAD

JOB NO:

BY: MSL DATE: 12/19/14

CHKD: DATE:

PAGE H-8

SHEET 1

BEARING CAPACITY ~15,000 GAL TANK

- ASSUME 1'-2" THICK SLAB
- ASSUME 13'-2" SQ SLAB

→ TANK FULL ~ (D + F + 0.7E) = 127.76^K ↓ & 12.12^K →

- M_{OT} = 12.12^K → × ($\frac{18.5^{FT}}{2}$ + 1'-2") = 126.25$^{K\cdot FT}$ UNF ↻
  10.42 FT ARM
- ΣP = 127.76^K + [(13'-2" SQ)^2 × 1.167' × 150 pcf × 1.034] = 159.14^K ↓
- A = 173.37 FT^2, y = 6.584 FT, $I = \frac{bh^3}{12}$ = 2504.76 FT^4
- $q = P/A + \frac{My}{I}$ = 918 psf +/- 332 psf → 1,245 KSF OR 0.586 KSF

1500 psf > NET ALLOWABLE ✓OK

→ TANK EMPTY (0.6D + 0.6W)

- M_{OT} = 2406$^{\#}$ × ($\frac{19.3^{FT}}{2}$)$_{ARM}$ = 23.22$^{K\cdot FT}$
- ΣP = 1500$^{\#}$ + (13.167 ft^2 × 1.167 FT × 150 pcf × 0.6) = 19.71^K
- $q = P/A$ +/- My/I = 113.7 psf +/- 61.0 psf → 174.7 psf OR 52.7 psf

✓OK

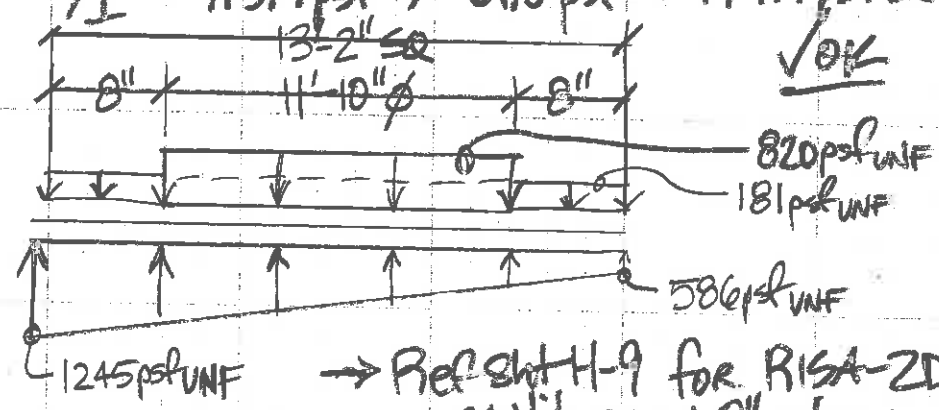

→ Ref Sht H-9 for RISA-2D
- CANTILEVER ON 8" extensions ok by inspection

12.086^K ~ 586 psf = 7.716^K

1245 - 586 = 4.3385

12.054

10.80^K ↓ = 4.339 + 5.338

9.703 = 9.677^K

AGM Form 30 12-01

H-9

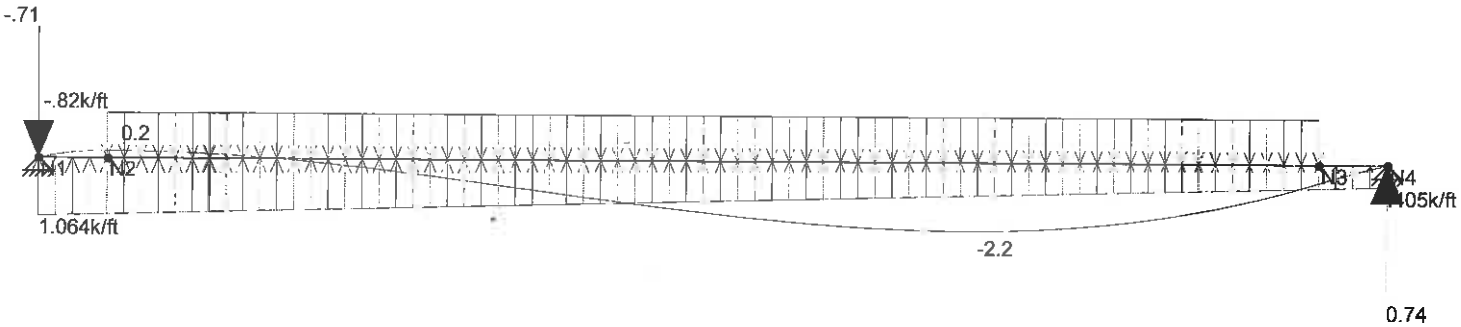

Loads: LC 1, unf
Results for LC 1, unf
Member Bending Moments (k-ft)
Y-direction Reaction units are k and k-ft

	SK - 2
	Dec 19, 2014 at 1:18 PM
	15000gallontankfoundation.r2d

Joint Coordinates and Temperatures

	Label	X [ft]	Y [ft]	Temp [F]
1	N1	0	0	0
2	N2	.67	0	0
3	N3	12.5	0	0
4	N4	13.167	0	0

Joint Boundary Conditions

	Joint Label	X [k/in]	Y [k/in]	Rotation[k-ft/rad]	Footing
1	N2				
2	N3				
3	N1	Reaction	Reaction		
4	N4	Reaction	Reaction		

Member Distributed Loads (BLC 1 : unf)

	Member Label	Direction	Start Magnitude[k/ft,F]	End Magnitude[k/ft,F]	Start Location[ft,%]	End Location[ft,%]
1	M1	Y	1.245	.586	0	%100
2	M1	Y	-.181	-.181	0	%100
3	M1	Y	-.82	-.82	.667	12.5

Load Combinations

	Description	Sol...	PD...	SR...	BLC	Factor	BLC	Factor	BLC	Factor	BLC	Factor	BLC	Factor	BLC	Factor	BLC	Factor	BLC	Factor
1	unf	Yes			1	1														

Load Combination Design

	Description	ASIF	CD	ABIF	Service	Hot Rolled	Cold Form...	Wood	Concrete	Masonry	Footings	Aluminum
1	unf					Yes	Yes	Yes	Yes	Yes	Yes	Yes

Beam: ***M1***

Shape: **W8x10**
Material: **A36 Gr.36**
Length: **13.167 ft**
I Joint: **N1**
J Joint: **N4**
LC 1: unf
Code Check: **No Calc**
Report Based On 97 Sections

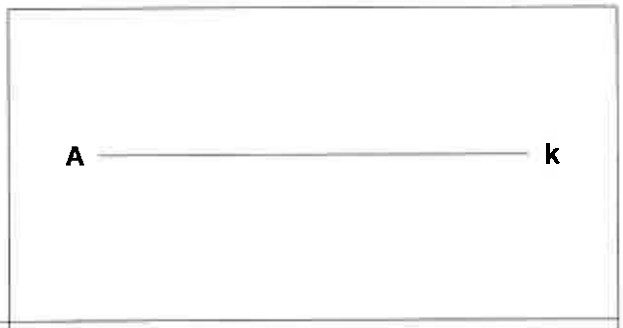

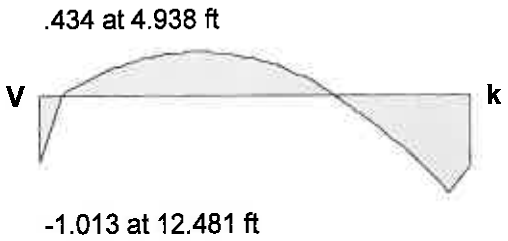

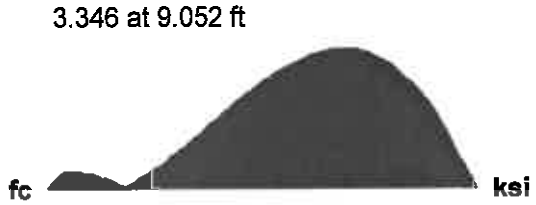

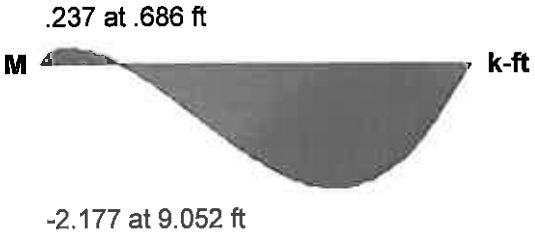

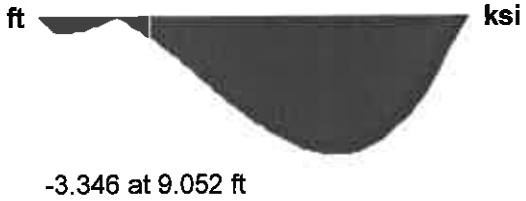

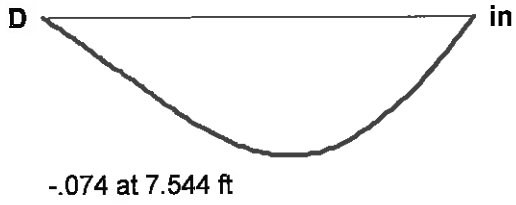

AISC 14th(360-10): ASD Code Check

Direct Analysis Method

- P-Delta analysis required for all AISC 360-10 Load Combinations -

Max Defl Ratio **L/2140**

ARCADIS

SUBJECT: UTILITY PAD

JOB NO:

BY: MSL DATE: 12/19/14

CHKD: DATE:

PAGE H-10

SHEET 1

~ BY INSPECTION ~ 1'-2" THICK w/ #5@10" o/c (@3" COVER BOT & 2" COVER TOP) IS SUFFICIENT FOR $M_{UNF} = 2.18^{K\cdot FT}$ & $V_{UNF} = 1.01^{K}$

d=10.1"

d=11.1"

~ ACI 350 T&S SHRINK REQ'S ~ POURS OF 33' & 30'

$$A_{S\,REQ'D} = \frac{0.0046h}{2\ FACES} = 0.34\ IN^2/FT < \#5@10"\ o/c\ (A_S = 0.37\ IN^2/FT)$$

~ GRAVITY LOADS = $127.76^{K} \downarrow / \left(\frac{\pi \times 11.83^{FT\,2}}{4}\right) = 1162\ psf < 1325\ psf$ ✓OK

1500 psf − (1.167' × 150 pcf)

TANK ANCHORAGE

(4) - 3/4" ø ADHESIVE ANCHORS (1 PER CLIP ANGLE)

$V_{REQ'D} = 12.12^{K} / 4\ ANCHORS = 3.03^{K}_{UNF},\ 4.33^{K}_{ACI}$

• LC#8 UNF ~ 0.6D+F+0.7E (SEISMIC) → $M_{OT} = 12.12^{K} \times \left(\frac{18.5^{FT}}{2}\right)_{ARM} = 112.11^{K\cdot FT}_{UNF}$

$M_{RES} = 126.59^{K} \times \left(\frac{11.83^{FT}}{2}\ TANK\ ø\right) = 748.99^{K}_{UNF}$

∴ $M_R > M_{OT}$ ~ NO TENSION IN ANCHORS $FS_{OVERTURNING} = 6.7 > 1.5$ ✓OK

• LC#7 ~ 0.6D+0.6W (WIND) → $M_{OT} = 2.406^{K} \times \left(\frac{19.3^{FT}}{2}\right)_{ARM} = 23.22^{K\cdot FT}$

$M_{RES} = 1500^{\#} \times \left(\frac{11.83^{FT}}{2}\right) = 8.87^{K\cdot FT}$

~ SINCE $M_{OT} > M_{RES}$ ~ TENSION IN ANCHORS

$$T_{REQ'D} = \frac{(M_{OT} \times 1.5\ SF) - M_{RES}}{2\ TENSION \times 11.83^{FT}} = 2.19^{K}_{UNF} \times \left(\frac{1.0W}{0.6W}\right)$$

$= 3.66^{K}_{ACI}$ REQ'D IN (2) - 3/4" ø HILTI SD-5000 ADHESIVE ANCHORS

PER TENSION CABLE STRAP

$$V_{REQ'D} = \frac{2.406^{K}}{4\ ANCHORS} = 0.60^{K}_{UNF},\ 1.01^{K}_{ACI}$$ ← 4 CLIP ANGLES (1) 3/4" ø ADHESIVE ANCHOR PER CLIP ANGLE

AGM Form 30 12-01

ARCADIS

SUBJECT: UTILITY PAD

JOB NO:

BY: MSL DATE: 12/19/14

CHKD: DATE:

PAGE H-11

SHEET 1

(TANK ANCHORAGE CONT)

- LC#7 – 0.9D+0.9F+1.0W = 110.78K↓ & 17.32K @ $\frac{18.5^{FT}}{2}$ ARM
  - $V_{DES} = \frac{17.32^K}{4\ ANCHORS} = \underline{4.33^K_{ACT}}$ ← (1) 3/4"ø ADHESIVE ANCHOR PER 4 CLIP ANGLES
  - $M_{OT} = 17.32^K \times \left(\frac{18.5^{FT}}{2}\right)_{ARM} = 160.2^{K \cdot FT}$
  - $M_{RES} = 110.78^K \times \frac{11.83^{FT}}{2} = 655.4^{K \cdot FT}$ ~ FS = 4.09 > 1.5 ✓OK

~ NO TENSION IN ANCHORS

AGM Form 30 12-01

H-12

Company:	ARCADIS	Page:	1
Specifier:	Matt Lotycz	Project:	Topok, CA PG&E - HQ
Address:		Sub-Project I Pos. No.:	HQ Utility Pad
Phone I Fax:		Date:	12/22/2014
E-Mail:			

Specifier's comments: 15,000 Gal Tank Anchorage - Max Wind Uplift with shear

1 Input data

Anchor type and diameter:	HIT-RE 500-SD + HAS 3/4
Effective embedment depth:	$h_{ef,act}$ = 10.000 in. ($h_{ef,limit}$ = - in.)
Material:	5.8
Evaluation Service Report:	ESR-2322
Issued I Valid:	2/1/2014 | 4/1/2016
Proof:	design method ACI 318-11 / Chem
Stand-off installation:	e_b = 0.000 in. (no stand-off); t = 0.500 in.
Anchor plate:	l_x x l_y x t = 8.000 in. x 9.000 in. x 0.500 in.; (Recommended plate thickness: not calculated)
Profile:	S shape (AISC); (L x W x T x FT) = 3.000 in. x 2.330 in. x 0.170 in. x 0.260 in.
Base material:	cracked concrete, 4000, f_c' = 4000 psi; h = 14.000 in., Temp. short/long: 130/110 °F
Installation:	hammer drilled hole, installation condition: dry
Reinforcement:	tension: condition B, shear: condition B; no supplemental splitting reinforcement present
	edge reinforcement: > No. 4 bar

SAME CAPACITY FOR 316SST

Geometry [in.] & Loading [lb, in.lb]

LC#7 0.6D+0.6W

WIND LOADS

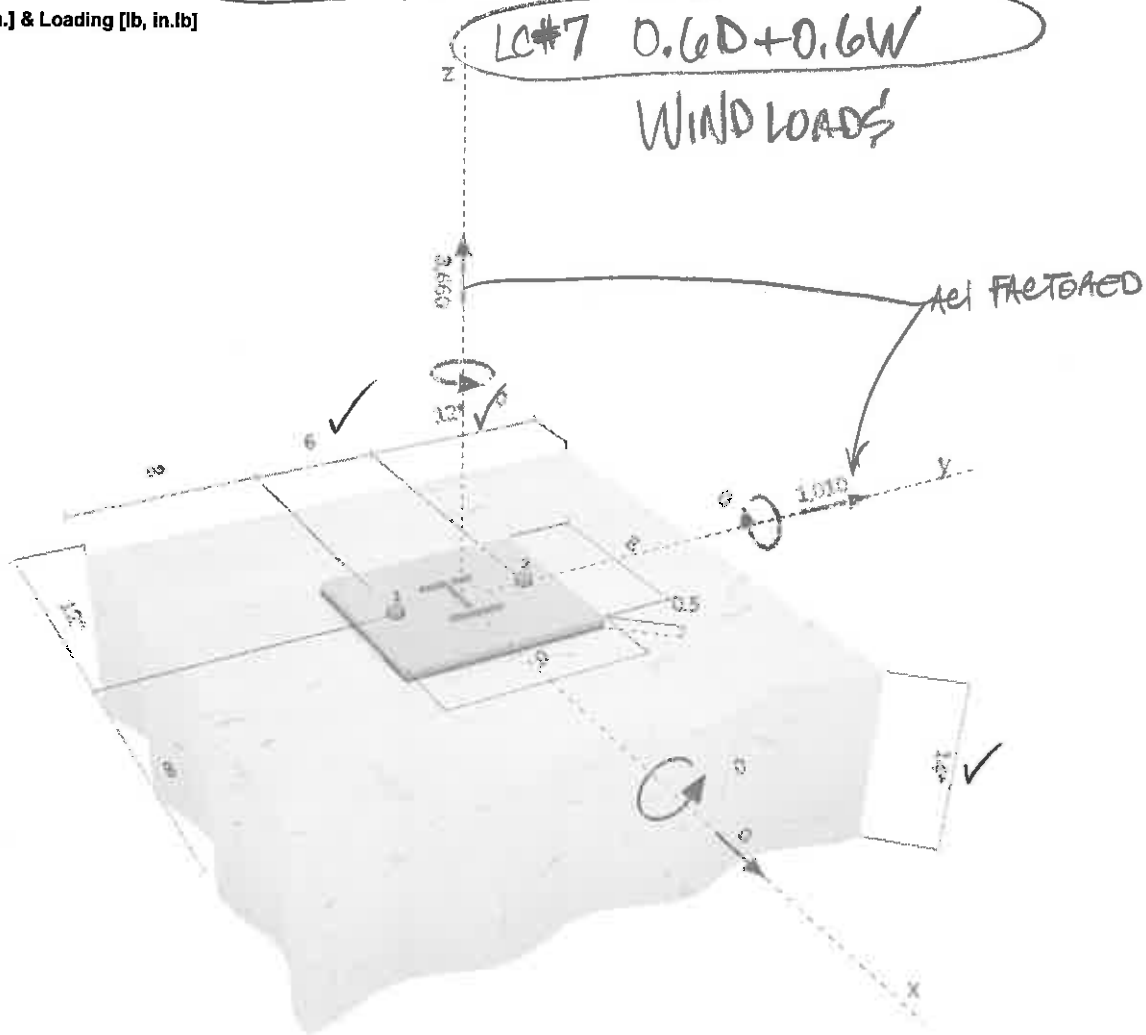

PROFIS Anchor (c) 2003-2009 Hilti AG, FL-9494 Schaan Hilti is a registered Trademark of Hilti AG, Schaan

Company:	ARCADIS	Page:	2
Specifier:	Matt Lotycz	Project:	Topok, CA PG&E - HQ
Address:		Sub-Project I Pos. No.:	HQ Utility Pad
Phone I Fax:	|	Date:	12/22/2014
E-Mail:			

2 Load case/Resulting anchor forces

Load case: Design loads

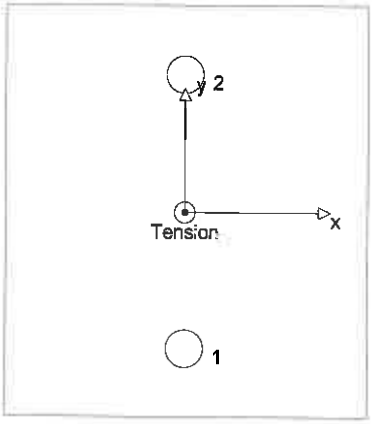

Anchor reactions [lb]
Tension force: (+Tension, -Compression)

Anchor	Tension force	Shear force	Shear force x	Shear force y
1	1830	505	0	505
2	1830	505	0	505

max. concrete compressive strain: - [‰]
max. concrete compressive stress: - [psi]
resulting tension force in (x/y)=(0.000/0.000): 3660 [lb]
resulting compression force in (x/y)=(0.000/0.000): 0 [lb]

3 Tension load

	Load N_{ua} [lb]	Capacity ϕN_n [lb]	Utilization $\beta_N = N_{ua}/\phi N_n$	Status
Steel Strength*	1830	15762	12	OK
Bond Strength**	3660	7917	47	OK
Sustained Tension Load Bond Strength*	N/A	N/A	N/A	N/A
Concrete Breakout Strength**	3660	20566	18	OK

* anchor having the highest loading **anchor group (anchors in tension)

3.1 Steel Strength

N_{sa} = ESR value refer to ICC-ES ESR-2322
$\phi N_{steel} \geq N_{ua}$ ACI 318-11 Table D.4.1.1

Variables

n	$A_{se,N}$ [in.^{2}]	f_{uta} [psi]
1	0.33	72500

Calculations

N_{sa} [lb]
24250

Results

N_{sa} [lb]	ϕ_{steel}	ϕN_{sa} [lb]	N_{ua} [lb]
24250	0.650	15762	1830

PROFIS Anchor (c) 2003-2009 Hilti AG, FL-9494 Schaan Hilti is a registered Trademark of Hilti AG, Schaan

3.2 Bond Strength

$N_{ag} = \left(\frac{A_{Na}}{A_{Na0}}\right) \psi_{ec1,Na}\, \psi_{ec2,Na}\, \psi_{ed,Na}\, \psi_{cp,Na}\, N_{ba}$ — ACI 318-11 Eq. (D-19)

$\phi\, N_{ag} \geq N_{ua}$ — ACI 318-11 Table D.4.1.1

A_{Na} = see ACI 318-11, Part D.5.5.1, Fig. RD.5.5.1(b)

$A_{Na0} = (2\, c_{Na})^2$ — ACI 318-11 Eq. (D-20)

$c_{Na} = 10\, d_a \sqrt{\frac{\tau_{uncr}}{1100}}$ — ACI 318-11 Eq. (D-21)

$\psi_{ec,Na} = \left(\frac{1}{1 + \frac{e_N}{c_{Na}}}\right) \leq 1.0$ — ACI 318-11 Eq. (D-23)

$\psi_{ed,Na} = 0.7 + 0.3 \left(\frac{c_{a,min}}{c_{Na}}\right) \leq 1.0$ — ACI 318-11 Eq. (D-25)

$\psi_{cp,Na} = \text{MAX}\left(\frac{c_{a,min}}{c_{ac}}, \frac{c_{Na}}{c_{ac}}\right) \leq 1.0$ — ACI 318-11 Eq. (D-27)

$N_{ba} = \lambda_a \cdot \tau_{k,c} \cdot \kappa_{bond} \cdot \pi \cdot d_a \cdot h_{ef}$ — ACI 318-11 Eq. (D-22)

Variables

$\tau_{k,c,uncr}$ [psi]	d_a [in.]	h_{ef} [in.]	$c_{a,min}$ [in.]	$\tau_{k,c}$ [psi]
715	0.750	10.000	12.000	345

$e_{c1,N}$ [in.]	$e_{c2,N}$ [in.]	c_{ac} [in.]	κ_{bond}	λ_a
0.000	0.000	17.469	1.00	1.000

Calculations

c_{Na} [in.]	A_{Na} [in.^{2}]	A_{Na0} [in.^{2}]	$\psi_{ed,Na}$
6.019	217.17	144.93	1.000

$\psi_{ec1,Na}$	$\psi_{ec2,Na}$	$\psi_{cp,Na}$	N_{ba} [lb]
1.000	1.000	1.000	8129

Results

N_{ag} [lb]	ϕ_{bond}	$\phi\, N_{ag}$ [lb]	N_{ua} [lb]
12180	0.650	7917	3660

3.3 Concrete Breakout Strength

$N_{cbg} = \left(\frac{A_{Nc}}{A_{Nc0}}\right) \psi_{ec,N}\, \psi_{ed,N}\, \psi_{c,N}\, \psi_{cp,N}\, N_b$ — ACI 318-11 Eq. (D-4)

$\phi\, N_{cbg} \geq N_{ua}$ — ACI 318-11 Table D.4.1.1

A_{Nc} see ACI 318-11, Part D.5.2.1, Fig. RD.5.2.1(b)

$A_{Nc0} = 9\, h_{ef}^2$ — ACI 318-11 Eq. (D-5)

$\psi_{ec,N} = \left(\frac{1}{1 + \frac{2\, e_N}{3\, h_{ef}}}\right) \leq 1.0$ — ACI 318-11 Eq. (D-8)

$\psi_{ed,N} = 0.7 + 0.3 \left(\frac{c_{a,min}}{1.5 h_{ef}}\right) \leq 1.0$ — ACI 318-11 Eq. (D-10)

$\psi_{cp,N} = \text{MAX}\left(\frac{c_{a,min}}{c_{ac}}, \frac{1.5 h_{ef}}{c_{ac}}\right) \leq 1.0$ — ACI 318-11 Eq. (D-12)

$N_b = k_c\, \lambda_a \sqrt{f'_c}\, h_{ef}^{1.5}$ — ACI 318-11 Eq. (D-6)

Variables

h_{ef} [in.]	$e_{c1,N}$ [in.]	$e_{c2,N}$ [in.]	$c_{a,min}$ [in.]	$\psi_{c,N}$
10.000	0.000	0.000	12.000	1.000

c_{ac} [in.]	k_c	λ_a	f'_c [psi]
17.469	17	1.000	4000

Calculations

A_{Nc} [in.^{2}]	A_{Nc0} [in.^{2}]	$\psi_{ec1,N}$	$\psi_{ec2,N}$	$\psi_{ed,N}$	$\psi_{cp,N}$	N_b [lb]
891.00	900.00	1.000	1.000	0.940	1.000	34000

Results

N_{cbg} [lb]	$\phi_{concrete}$	$\phi\, N_{cbg}$ [lb]	N_{ua} [lb]
31640	0.650	20566	3660

PROFIS Anchor (c) 2003-2009 Hilti AG, FL-9494 Schaan Hilti is a registered Trademark of Hilti AG, Schaan

Company:	ARCADIS	Page:	4
Specifier:	Matt Lotycz	Project:	Topok, CA PG&E - HQ
Address:		Sub-Project I Pos. No.:	HQ Utility Pad
Phone I Fax:	|	Date:	12/22/2014
E-Mail:			

4 Shear load

	Load V_{ua} [lb]	Capacity ϕV_n [lb]	Utilization $\beta_V = V_{ua}/\phi V_n$	Status
Steel Strength*	505	8730	6	OK
Steel failure (with lever arm)*	N/A	N/A	N/A	N/A
Pryout Strength (Bond Strength controls)**	1010	17052	6	OK
Concrete edge failure in direction y+**	1010	13147	8	OK

* anchor having the highest loading **anchor group (relevant anchors)

4.1 Steel Strength

$V_{sa} = (n\ 0.6\ A_{se,V}\ f_{uta})$ refer to ICC-ES ESR-2322

$\phi\ V_{steel} \geq V_{ua}$ ACI 318-11 Table D.4.1.1

Variables

n	$A_{se,V}$ [in.^{2}]	f_{uta} [psi]	$(n\ 0.6\ A_{se,V}\ f_{uta})$ [lb]
1	0.33	72500	14550

Calculations

V_{sa} [lb]
14550

Results

V_{sa} [lb]	ϕ_{steel}	$\phi\ V_{sa}$ [lb]	V_{ua} [lb]
14550	0.600	8730	505

4.2 Pryout Strength (Bond Strength controls)

$V_{cpg} = k_{cp}\left[\left(\frac{A_{Na}}{A_{Na0}}\right)\psi_{ec1,Na}\ \psi_{ec2,Na}\ \psi_{ed,Na}\ \psi_{cp,Na}\ N_{ba}\right]$ ACI 318-11 Eq. (D-41)

$\phi\ V_{cpg} \geq V_{ua}$ ACI 318-11 Table (D.4.1.1)

A_{Na} see ACI 318-11, Part D.5.5.1, Fig. RD.5.5.1(b)

$A_{Na0} = (2\ c_{Na})^2$ ACI 318-11 Eq. (D-20)

$c_{Na} = 10\ d_a \sqrt{\frac{\tau_{uncr}}{1100}}$ ACI 318-11 Eq. (D-21)

$\psi_{ec,Na} = \left(\frac{1}{1 + \frac{e_N}{c_{Na}}}\right) \leq 1.0$ ACI 318-11 Eq. (D-23)

$\psi_{ed,Na} = 0.7 + 0.3\left(\frac{c_{a,min}}{c_{ac}}\right) \leq 1.0$ ACI 318-11 Eq. (D-25)

$\psi_{cp,Na} = \text{MAX}\left(\frac{c_{a,min}}{c_{ac}}, \frac{c_{Na}}{c_{ac}}\right) \leq 1.0$ ACI 318-11 Eq. (D-27)

$N_{ba} = \lambda_a \cdot \tau_{k,c} \cdot \kappa_{bond} \cdot \pi \cdot d_a \cdot h_{ef}$ ACI 318-11 Eq. (D-22)

Variables

k_{cp}	$\tau_{k,c,uncr}$ [psi]	d_a [in.]	h_{ef} [in.]	$c_{a,min}$ [in.]	$\tau_{k,c}$ [psi]
2	715	0.750	10.000	12.000	345

$e_{c1,N}$ [in.]	$e_{c2,N}$ [in.]	c_{ac} [in.]	κ_{bond}	λ_a
0.000	0.000	17.469	1.00	1.000

Calculations

c_{Na} [in.]	A_{Na} [in.^{2}]	A_{Na0} [in.^{2}]	$\psi_{ed,Na}$
6.019	217.17	144.93	1.000

$\psi_{ec1,Na}$	$\psi_{ec2,Na}$	$\psi_{cp,Na}$	N_{ba} [lb]
1.000	1.000	1.000	8129

Results

V_{cpg} [lb]	$\phi_{concrete}$	$\phi\ V_{cpg}$ [lb]	V_{ua} [lb]
24360	0.700	17052	1010

PROFIS Anchor (c) 2003-2009 Hilti AG, FL-9494 Schaan Hilti is a registered Trademark of Hilti AG, Schaan

4.3 Concrete edge failure in direction y+

$V_{cbg} = \left(\frac{A_{Vc}}{A_{Vc0}}\right) \psi_{ec,V}\, \psi_{ed,V}\, \psi_{c,V}\, \psi_{h,V}\, \psi_{parallel,V}\, V_b$ — ACI 318-11 Eq. (D-31)

$\phi\, V_{cbg} \geq V_{ua}$ — ACI 318-11 Table D.4.1.1

A_{Vc} see ACI 318-11, Part D.6.2.1, Fig. RD.6.2.1(b)

$A_{Vc0} = 4.5\, c_{a1}^2$ — ACI 318-11 Eq. (D-32)

$\psi_{ec,V} = \left(\frac{1}{1 + \frac{2e_v}{3c_{a1}}}\right) \leq 1.0$ — ACI 318-11 Eq. (D-36)

$\psi_{ed,V} = 0.7 + 0.3\left(\frac{c_{a2}}{1.5c_{a1}}\right) \leq 1.0$ — ACI 318-11 Eq. (D-38)

$\psi_{h,V} = \sqrt{\frac{1.5c_{a1}}{h_a}} \geq 1.0$ — ACI 318-11 Eq. (D-39)

$V_b = 9\, \lambda_a \sqrt{f'_c}\, c_{a1}^{1.5}$ — ACI 318-11 Eq. (D-34)

Variables

c_{a1} [in.]	c_{a2} [in.]	e_{cV} [in.]	$\psi_{c,V}$	h_a [in.]
12.000	12.000	0.000	1.200	14.000

l_e [in.]	λ_a	d_a [in.]	f'_c [psi]	$\psi_{parallel,V}$
6.000	1.000	0.750	4000	1.000

Calculations

A_{Vc} [in.^{2}]	A_{Vc0} [in.^{2}]	$\psi_{ec,V}$	$\psi_{ed,V}$	$\psi_{h,V}$	V_b [lb]
420.00	648.00	1.000	0.900	1.134	23662

Results

V_{cbg} [lb]	$\phi_{concrete}$	$\phi\, V_{cbg}$ [lb]	V_{ua} [lb]
18781	0.700	13147	1010

5 Combined tension and shear loads

β_N	β_V	ζ	Utilization $\beta_{N,V}$ [%]	Status
0.462	0.077	5/3	30	OK

$\beta_{NV} = \beta_N^{\zeta} + \beta_V^{\zeta} <= 1$

6 Warnings

- Load re-distributions on the anchors due to elastic deformations of the anchor plate are not considered. The anchor plate is assumed to be sufficiently stiff, in order not to be deformed when subjected to the loading!
- Condition A applies when supplementary reinforcement is used. The Φ factor is increased for non-steel Design Strengths except Pullout Strength and Pryout strength. Condition B applies when supplementary reinforcement is not used and for Pullout Strength and Pryout Strength. Refer to your local standard.
- Design Strengths of adhesive anchor systems are influenced by the cleaning method. Refer to the INSTRUCTIONS FOR USE given in the Evaluation Service Report for cleaning and installation instructions
- Checking the transfer of loads into the base material and the shear resistance are required in accordance with ACI 318 or the relevant standard!
- Installation of Hilti adhesive anchor systems shall be performed by personnel trained to install Hilti adhesive anchors. Reference ACI 318-11, Part D.9.1

Fastening meets the design criteria!

PROFIS Anchor (c) 2003-2009 Hilti AG, FL-9494 Schaan Hilti is a registered Trademark of Hilti AG, Schaan

7 Installation data

Anchor plate, steel: -
Profile: S shape (AISC); 3.000 x 2.330 x 0.170 x 0.260 in.
Hole diameter in the fixture: d_f = 0.813 in.
Plate thickness (input): 0.500 in.
Recommended plate thickness: not calculated
Cleaning: Premium cleaning of the drilled hole is required

Anchor type and diameter: HIT-RE 500-SD + HAS 3/4
Installation torque: 1200.000 in.lb
Hole diameter in the base material: 0.875 in.
Hole depth in the base material: 10.000 in.
Minimum thickness of the base material: 11.750 in.

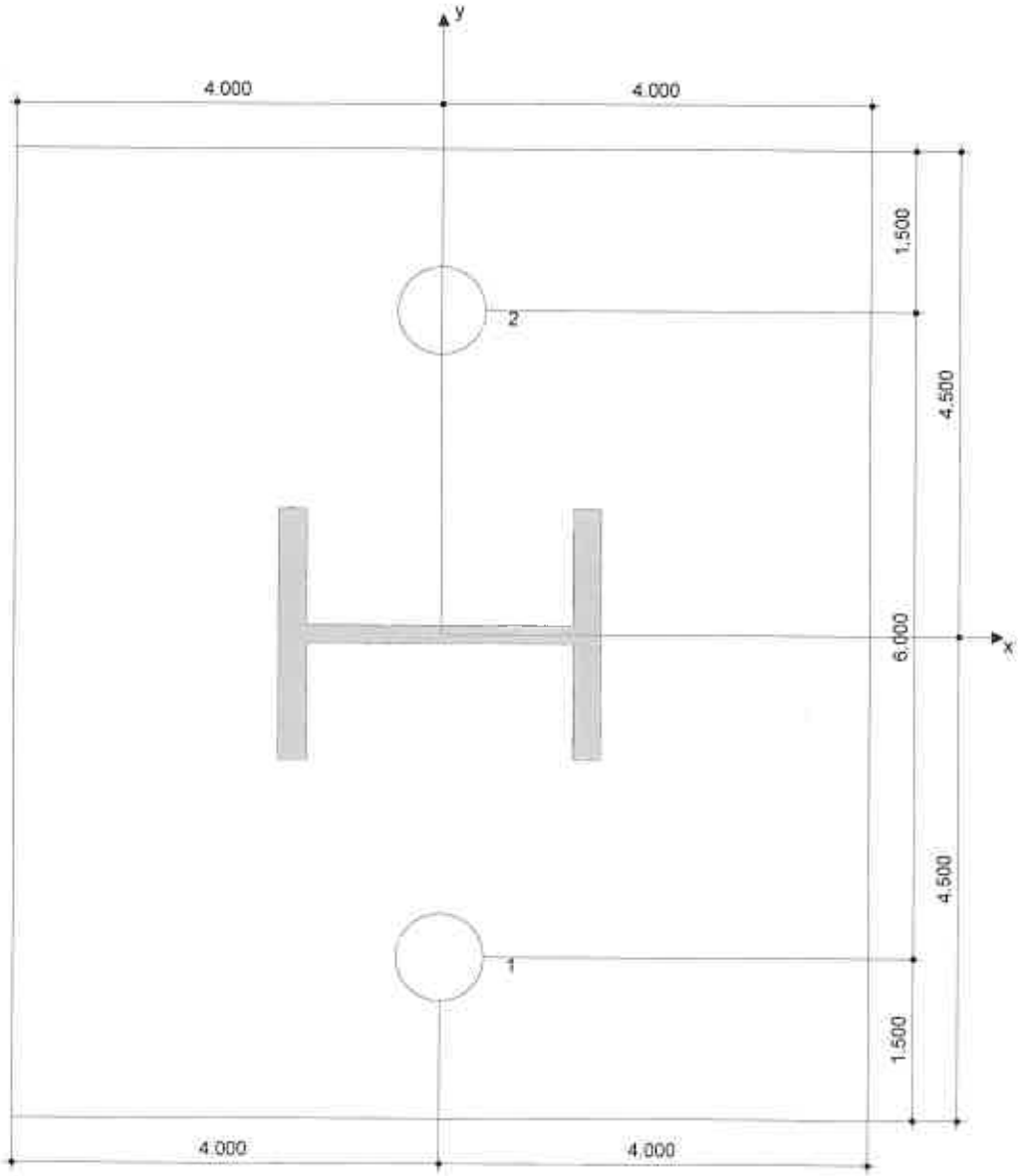

Coordinates Anchor in.

Anchor	x	y	c_{-x}	c_{+x}	c_{-y}	c_{+y}
1	0.000	-3.000	12.000	-	-	18.000
2	0.000	3.000	12.000	-	-	12.000

PROFIS Anchor (c) 2003-2009 Hilti AG, FL-9494 Schaan Hilti is a registered Trademark of Hilti AG, Schaan

8 Remarks; Your Cooperation Duties

- Any and all information and data contained in the Software concern solely the use of Hilti products and are based on the principles, formulas and security regulations in accordance with Hilti's technical directions and operating, mounting and assembly instructions, etc., that must be strictly complied with by the user. All figures contained therein are average figures, and therefore use-specific tests are to be conducted prior to using the relevant Hilti product. The results of the calculations carried out by means of the Software are based essentially on the data you put in. Therefore, you bear the sole responsibility for the absence of errors, the completeness and the relevance of the data to be put in by you. Moreover, you bear sole responsibility for having the results of the calculation checked and cleared by an expert, particularly with regard to compliance with applicable norms and permits, prior to using them for your specific facility. The Software serves only as an aid to interpret norms and permits without any guarantee as to the absence of errors, the correctness and the relevance of the results or suitability for a specific application.
- You must take all necessary and reasonable steps to prevent or limit damage caused by the Software. In particular, you must arrange for the regular backup of programs and data and, if applicable, carry out the updates of the Software offered by Hilti on a regular basis. If you do not use the AutoUpdate function of the Software, you must ensure that you are using the current and thus up-to-date version of the Software in each case by carrying out manual updates via the Hilti Website. Hilti will not be liable for consequences, such as the recovery of lost or damaged data or programs, arising from a culpable breach of duty by you.

PROFIS Anchor (c) 2003-2009 Hilti AG, FL-9494 Schaan Hilti is a registered Trademark of Hilti AG, Schaan

H-13

Company:		Page:	1
Specifier:		Project:	Topok, CA PG&E - HQ
Address:		Sub-Project I Pos. No.:	HQ Utility Pad
Phone I Fax:		Date:	12/22/2014
E-Mail:			

Specifier's comments: 15,000 Gal Tank Anchorage - Max Seismic Shear

1 Input data

Anchor type and diameter:	**HIT-RE 500-SD + HAS B7 3/4**
Effective embedment depth:	$h_{ef,act}$ = 10.000 in. ($h_{ef,limit}$ = - in.)
Material:	ASTM A 193 Grade B7
Evaluation Service Report:	ESR-2322
Issued I Valid:	2/1/2014 | 4/1/2016
Proof:	design method ACI 318-11 / Chem
Stand-off installation:	e_b = 0.000 in. (no stand-off); t = 0.500 in.
Anchor plate:	l_x x l_y x t = 8.000 in. x 9.000 in. x 0.500 in.; (Recommended plate thickness: not calculated)
Profile:	S shape (AISC); (L x W x T x FT) = 3.000 in. x 2.330 in. x 0.170 in. x 0.260 in.
Base material:	cracked concrete, 4000, f_c' = 4000 psi; h = 14.000 in., Temp. short/long: 130/110 °F
Installation:	hammer drilled hole, installation condition: dry
Reinforcement:	tension: condition B, shear: condition B; no supplemental splitting reinforcement present
	edge reinforcement: > No. 4 bar
Seismic loads (cat. C, D, E, or F)	Tension load: yes (D.3.3.4.3 (d))
	Shear load: yes (D.3.3.5.3 (c))

FYI 316SST ~ SAME CAPACITY

Geometry [in.] & Loading [lb, in.lb]

LC#8 0.6D+1.0F+0.7E

SEISMIC LOADS

4.33K ACI x 2.5 Ω OVERSTRENGTH

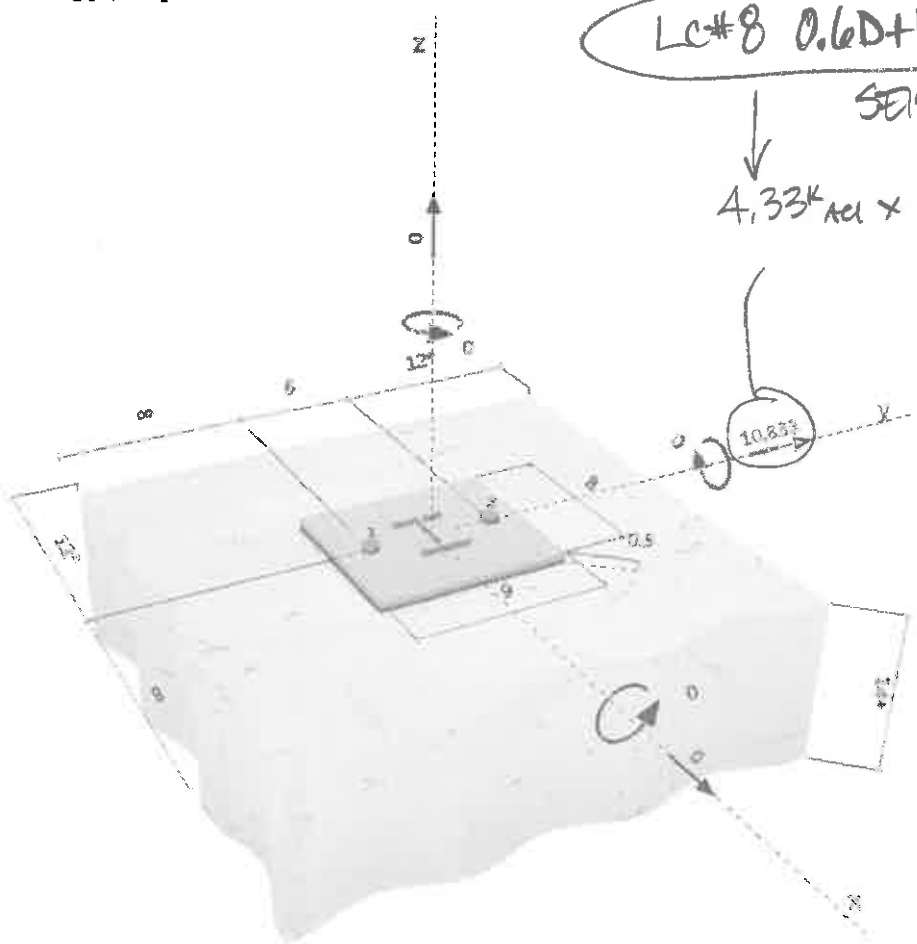

PROFIS Anchor (c) 2003-2009 Hilti AG, FL-9494 Schaan Hilti is a registered Trademark of Hilti AG, Schaan

Company:
Specifier:
Address:
Phone I Fax:
E-Mail:

2 Load case/Resulting anchor forces

Load case: Design loads

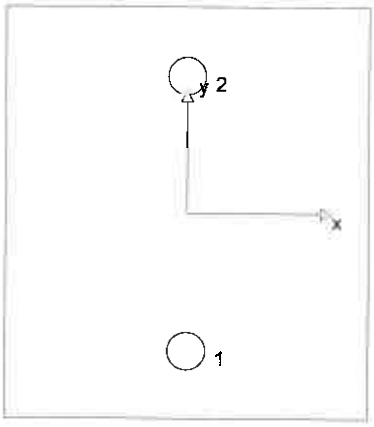

Anchor reactions [lb]
Tension force: (+Tension, -Compression)

Anchor	Tension force	Shear force	Shear force x	Shear force y
1	0	5417	0	5417
2	0	5417	0	5417

max. concrete compressive strain: - [‰]
max. concrete compressive stress: - [psi]
resulting tension force in (x/y)=(0.000/0.000): 0 [lb]
resulting compression force in (x/y)=(0.000/0.000): 0 [lb]

3 Tension load

	Load N_{ua} [lb]	Capacity ϕN_n [lb]	Utilization $\beta_N = N_{ua}/\phi N_n$	Status
Steel Strength*	N/A	N/A	N/A	N/A
Bond Strength**	N/A	N/A	N/A	N/A
Sustained Tension Load Bond Strength*	N/A	N/A	N/A	N/A
Concrete Breakout Strength**	N/A	N/A	N/A	N/A

* anchor having the highest loading **anchor group (anchors in tension)

PROFIS Anchor (c) 2003-2009 Hilti AG, FL-9494 Schaan Hilti is a registered Trademark of Hilti AG, Schaan

4 Shear load

	Load V_{ua} [lb]	Capacity ϕV_n [lb]	Utilization $\beta_V = V_{ua}/\phi V_n$	Status
Steel Strength*	5417	11414	48	OK
Steel failure (with lever arm)*	N/A	N/A	N/A	N/A
Pryout Strength (Bond Strength controls)**	10833	11084	98	OK
Concrete edge failure in direction y+**	10833	13147	83	OK

* anchor having the highest loading **anchor group (relevant anchors)

4.1 Steel Strength

$V_{sa} = \alpha_{V,seis}\,(n\ 0.6\ A_{se,V}\ f_{uta})$ refer to ICC-ES ESR-2322

$\phi\ V_{steel} \geq V_{ua}$ ACI 318-11 Table D.4.1.1

Variables

n	$A_{se,V}$ [in.^{2}]	f_{uta} [psi]	$\alpha_{V,seis}$	$(n\ 0.6\ A_{se,V}\ f_{uta})$ [lb]
1	0.33	125000	0.700	25086

Calculations

$V_{sa,eq}$ [lb]
17560

Results

$V_{sa,eq}$ [lb]	ϕ_{steel}	$\phi\ V_{sa}$ [lb]	V_{ua} [lb]
17560	0.650	11414	5417

4.2 Pryout Strength (Bond Strength controls)

$V_{cpg} = k_{cp}\left[\left(\frac{A_{Na}}{A_{Na0}}\right)\psi_{ec1,Na}\ \psi_{ec2,Na}\ \psi_{ed,Na}\ \psi_{cp,Na}\ N_{ba}\right]$ ACI 318-11 Eq. (D-41)

$\phi\ V_{cpg} \geq V_{ua}$ ACI 318-11 Table (D.4.1.1)

A_{Na} see ACI 318-11, Part D.5.5.1, Fig. RD.5.5.1(b)

$A_{Na0} = (2\ c_{Na})^2$ ACI 318-11 Eq. (D-20)

$c_{Na} = 10\ d_a \sqrt{\frac{\tau_{uncr}}{1100}}$ ACI 318-11 Eq. (D-21)

$\psi_{ec,Na} = \left(\frac{1}{1 + \frac{e_N}{c_{Na}}}\right) \leq 1.0$ ACI 318-11 Eq. (D-23)

$\psi_{ed,Na} = 0.7 + 0.3\left(\frac{c_{a,min}}{c_{ac}}\right) \leq 1.0$ ACI 318-11 Eq. (D-25)

$\psi_{cp,Na} = \text{MAX}\left(\frac{c_{a,min}}{c_{ac}}, \frac{c_{Na}}{c_{ac}}\right) \leq 1.0$ ACI 318-11 Eq. (D-27)

$N_{ba} = \lambda_a \cdot \tau_{k,c} \cdot \alpha_{N,seis} \cdot \kappa_{bond} \cdot \pi \cdot d_a \cdot h_{ef}$ ACI 318-11 Eq. (D-22)

Variables

k_{cp}	$\tau_{k,c,uncr}$ [psi]	d_a [in.]	h_{ef} [in.]	$c_{a,min}$ [in.]	$\tau_{k,c}$ [psi]
2	715	0.750	10.000	12.000	345

$e_{c1,N}$ [in.]	$e_{c2,N}$ [in.]	c_{ac} [in.]	κ_{bond}	λ_a	$\alpha_{N,seis}$
0.000	0.000	17.469	1.00	1.000	0.650

Calculations

c_{Na} [in.]	A_{Na} [in.^{2}]	A_{Na0} [in.^{2}]	$\psi_{ed,Na}$
6.019	217.17	144.93	1.000

$\psi_{ec1,Na}$	$\psi_{ec2,Na}$	$\psi_{cp,Na}$	N_{ba} [lb]
1.000	1.000	1.000	5284

Results

V_{cpg} [lb]	$\phi_{concrete}$	$\phi_{seismic}$	$\phi_{nonductile}$	$\phi\ V_{cpg}$ [lb]	V_{ua} [lb]
15834	0.700	1.000	1.000	11084	10833

PROFIS Anchor (c) 2003-2009 Hilti AG, FL-9494 Schaan Hilti is a registered Trademark of Hilti AG, Schaan

4.3 Concrete edge failure in direction y+

$V_{cbg} = \left(\frac{A_{Vc}}{A_{Vc0}}\right) \psi_{ec,V}\ \psi_{ed,V}\ \psi_{c,V}\ \psi_{h,V}\ \psi_{parallel,V}\ V_b$ — ACI 318-11 Eq. (D-31)

$\phi\ V_{cbg} \geq V_{ua}$ — ACI 318-11 Table D.4.1.1

A_{Vc} see ACI 318-11, Part D.6.2.1, Fig. RD.6.2.1(b)

$A_{Vc0} = 4.5\ c_{a1}^2$ — ACI 318-11 Eq. (D-32)

$\psi_{ec,V} = \left(\frac{1}{1 + \frac{2e_V}{3c_{a1}}}\right) \leq 1.0$ — ACI 318-11 Eq. (D-36)

$\psi_{ed,V} = 0.7 + 0.3\left(\frac{c_{a2}}{1.5c_{a1}}\right) \leq 1.0$ — ACI 318-11 Eq. (D-38)

$\psi_{h,V} = \sqrt{\frac{1.5c_{a1}}{h_a}} \geq 1.0$ — ACI 318-11 Eq. (D-39)

$V_b = 9\ \lambda_a \sqrt{f'_c}\ c_{a1}^{1.5}$ — ACI 318-11 Eq. (D-34)

Variables

c_{a1} [in.]	c_{a2} [in.]	e_{cV} [in.]	$\psi_{c,V}$	h_a [in.]
12.000	12.000	0.000	1.200	14.000

l_e [in.]	λ_a	d_a [in.]	f'_c [psi]	$\psi_{parallel,V}$
6.000	1.000	0.750	4000	1.000

Calculations

A_{Vc} [in.^{2}]	A_{Vc0} [in.^{2}]	$\psi_{ec,V}$	$\psi_{ed,V}$	$\psi_{h,V}$	V_b [lb]
420.00	648.00	1.000	0.900	1.134	23662

Results

V_{cbg} [lb]	$\phi_{concrete}$	$\phi_{seismic}$	$\phi_{nonductile}$	$\phi\ V_{cbg}$ [lb]	V_{ua} [lb]
18781	0.700	1.000	1.000	13147	10833

5 Warnings

- Load re-distributions on the anchors due to elastic deformations of the anchor plate are not considered. The anchor plate is assumed to be sufficiently stiff, in order not to be deformed when subjected to the loading!
- Condition A applies when supplementary reinforcement is used. The Φ factor is increased for non-steel Design Strengths except Pullout Strength and Pryout strength. Condition B applies when supplementary reinforcement is not used and for Pullout Strength and Pryout Strength. Refer to your local standard.
- Design Strengths of adhesive anchor systems are influenced by the cleaning method. Refer to the INSTRUCTIONS FOR USE given in the Evaluation Service Report for cleaning and installation instructions
- Checking the transfer of loads into the base material and the shear resistance are required in accordance with ACI 318 or the relevant standard!
- An anchor design approach for structures assigned to Seismic Design Category C, D, E or F is given in ACI 318-11 Appendix D, Part D.3.3.4.3 (a) that requires the governing design strength of an anchor or group of anchors be limited by ductile steel failure. If this is NOT the case, the connection design (tension) shall satisfy the provisions of Part D.3.3.4.3 (b), Part D.3.3.4.3 (c), or Part D.3.3.4.3 (d). The connection design (shear) shall satisfy the provisions of Part D.3.3.5.3 (a), Part D.3.3.5.3 (b), or Part D.3.3.5.3 (c).
- Part D.3.3.4.3 (b) / part D.3.3.5.3 (a) requires that the attachment the anchors are connecting to the structure be designed to undergo ductile yielding at a load level corresponding to anchor forces no greater than the controlling design strength. Part D.3.3.4.3 (c) / part D.3.3.5.3 (b) waives the ductility requirements and requires that the anchors shall be designed for the maximum tension / shear that can be transmitted to the anchors by a non-yielding attachment. Part D.3.3.4.3 (d) / part D.3.3.5.3 (c) waives the ductility requirements and requires the design strength of the anchors to equal or exceed the maximum tension / shear obtained from design load combinations that include E, with E increased by Ω_0.
- Installation of Hilti adhesive anchor systems shall be performed by personnel trained to install Hilti adhesive anchors. Reference ACI 318-11, Part D.9.1

Fastening meets the design criteria!

PROFIS Anchor (c) 2003-2009 Hilti AG, FL-9494 Schaan Hilti is a registered Trademark of Hilti AG, Schaan

6 Installation data

Anchor plate, steel: -
Profile: S shape (AISC); 3.000 x 2.330 x 0.170 x 0.260 in.
Hole diameter in the fixture: d_f = 0.813 in.
Plate thickness (input): 0.500 in.
Recommended plate thickness: not calculated
Cleaning: Premium cleaning of the drilled hole is required

Anchor type and diameter: HIT-RE 500-SD + HAS B7 3/4
Installation torque: 1200.000 in.lb
Hole diameter in the base material: 0.875 in.
Hole depth in the base material: 10.000 in.
Minimum thickness of the base material: 11.750 in.

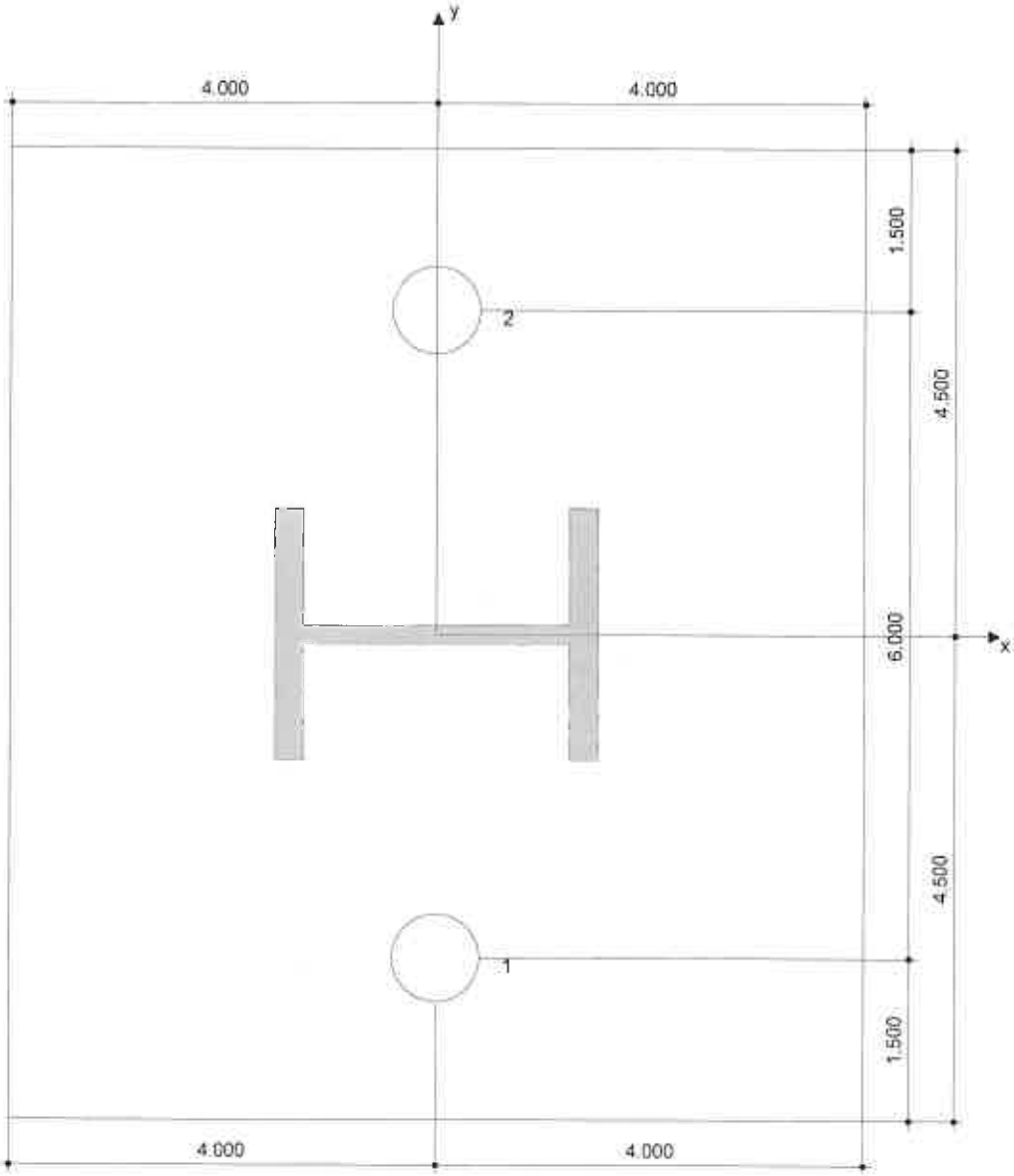

Coordinates Anchor in.

Anchor	x	y	c_{-x}	c_{+x}	c_{-y}	c_{+y}
1	0.000	-3.000	12.000	-	-	18.000
2	0.000	3.000	12.000	-	-	12.000

PROFIS Anchor (c) 2003-2009 Hilti AG, FL-9494 Schaan Hilti is a registered Trademark of Hilti AG, Schaan

7 Remarks; Your Cooperation Duties

- Any and all information and data contained in the Software concern solely the use of Hilti products and are based on the principles, formulas and security regulations in accordance with Hilti's technical directions and operating, mounting and assembly instructions, etc., that must be strictly complied with by the user. All figures contained therein are average figures, and therefore use-specific tests are to be conducted prior to using the relevant Hilti product. The results of the calculations carried out by means of the Software are based essentially on the data you put in. Therefore, you bear the sole responsibility for the absence of errors, the completeness and the relevance of the data to be put in by you. Moreover, you bear sole responsibility for having the results of the calculation checked and cleared by an expert, particularly with regard to compliance with applicable norms and permits, prior to using them for your specific facility. The Software serves only as an aid to interpret norms and permits without any guarantee as to the absence of errors, the correctness and the relevance of the results or suitability for a specific application.
- You must take all necessary and reasonable steps to prevent or limit damage caused by the Software. In particular, you must arrange for the regular backup of programs and data and, if applicable, carry out the updates of the Software offered by Hilti on a regular basis. If you do not use the AutoUpdate function of the Software, you must ensure that you are using the current and thus up-to-date version of the Software in each case by carrying out manual updates via the Hilti Website. Hilti will not be liable for consequences, such as the recovery of lost or damaged data or programs, arising from a culpable breach of duty by you.

PROFIS Anchor (c) 2003-2009 Hilti AG, FL-9494 Schaan Hilti is a registered Trademark of Hilti AG, Schaan

ARCADIS

SUBJECT: TOPOK-UTILITY PAD

JOB NO:

BY: MSL DATE: 12/19/14

CHKD: DATE:

PAGE H-14

SHEET 1

5,000 GAL WATER TANKS

- REF SHT H-15 FOR TANK INFO
- REF SHT H-16 FOR TANK SEISMIC LOADS

  AWWA D103 ~ $V_{SEISMIC} = 6.46^K \rightarrow$

  ASCE 7-10 – 15.7.6 ~ $V_{SEISMIC} = 6.8^K \rightarrow$

- REF SHT H-6 AWWA D103 ~ $V_{SEISMIC} = 3.3^K \rightarrow$

  $M_{SEISMIC} = 21.89^{K\cdot FT}$

  ~ ANCHORAGE REQ'D FOR OVERTURNING

- ASCE 7-10 15.4.2 RIGID – NON BLDG STRUCTURE (PER 15.7.6.1-a)

  $V = 0.30 S_{DS} W I_e = 0.30(0.245)(42{,}995^{\#})(1.5) = 4.738^K \rightarrow$

  USE

  $M_{SEISMIC} = 6.8^K \times (11.78^{FT}/2) = 40.05^{K\cdot FT}$

AGM Form 30 12-01

WATER

H-15

5,000 GAL / 7.48 GAL/CF = 668.45 CF / ((π × 8.5 FT²) / 4)
= 11.78 FT WATER HEIGHT

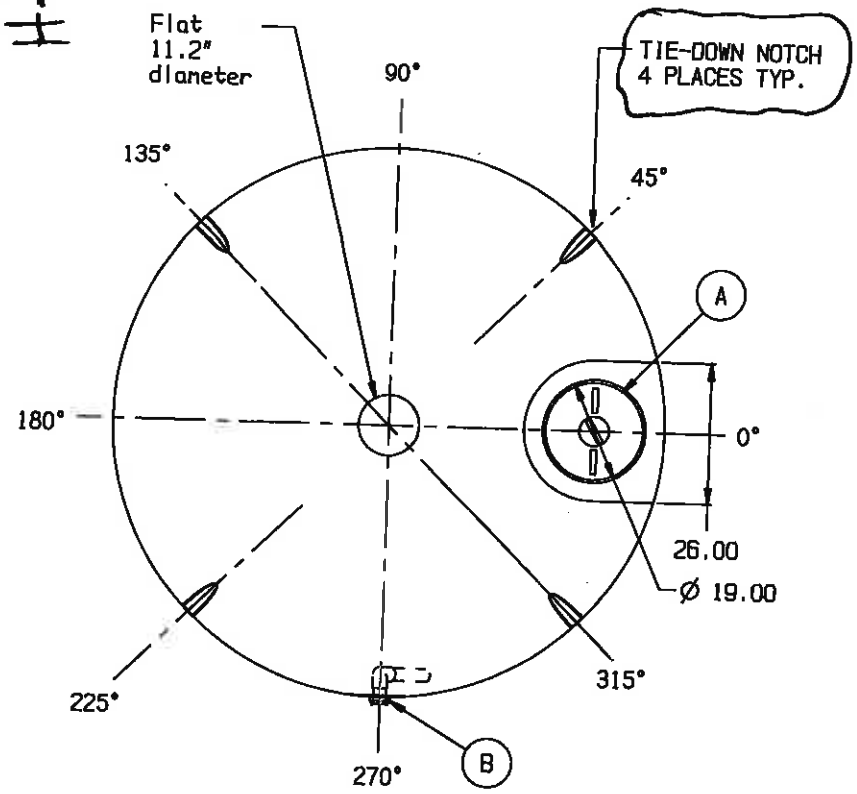

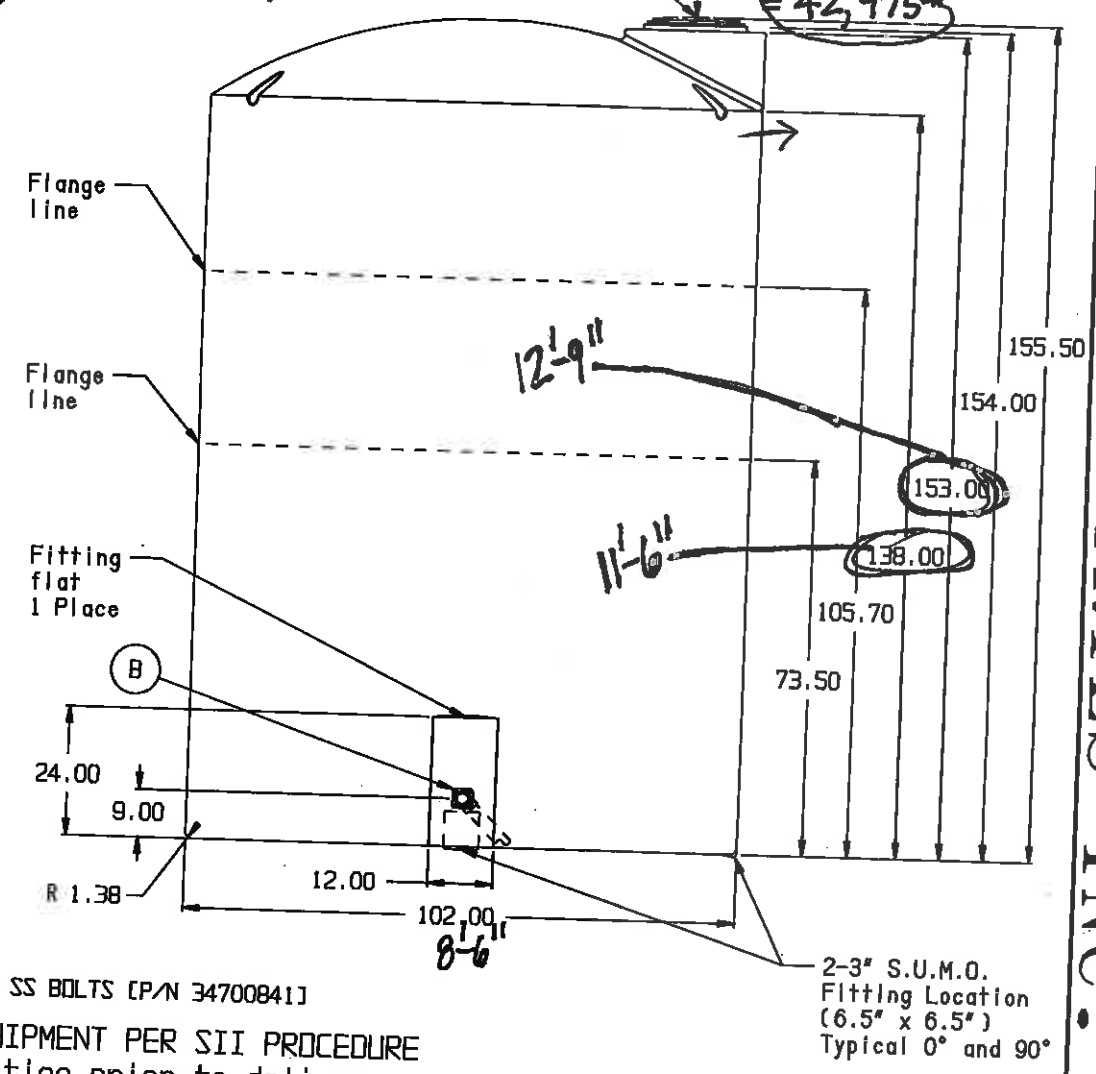

SNYDER INDUSTRIES INC.

18" PE THREADED-VENTED MANWAY W/15" ACCESS [P/N 34700087]
2" PP DBL FLANGED BOLTED LONG SIPHON TUBE ASSY W/EPDM GASKETS & SS BOLTS [P/N 34700841]

BASE FITTINGS TO BE LEFT INSTALLED AT TIME OF SHIPMENT PER SII PROCEDURE
Consult Snyder's Guidelines for Use and Installation prior to delivery.
Available on-line at www.snydernet.com

(all dimensions in inches)

5,000 GALLON FLAT BOTTOM TANK

PART # TANK: 1002000W94302 (P)
HDLPE/NAT/1.0 SPGR

REF#: 0000

02/08/06

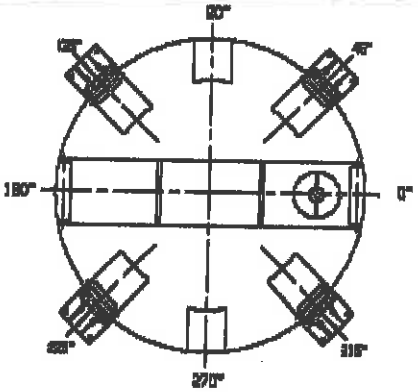

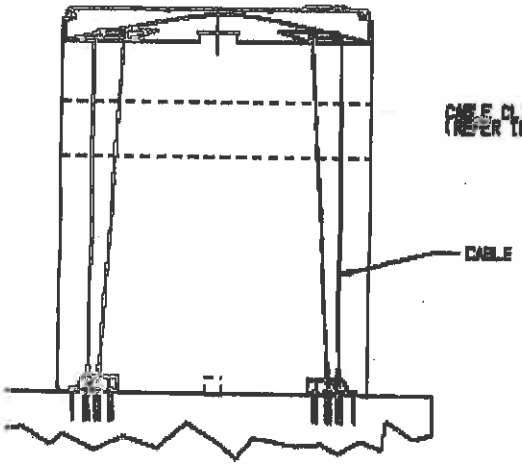

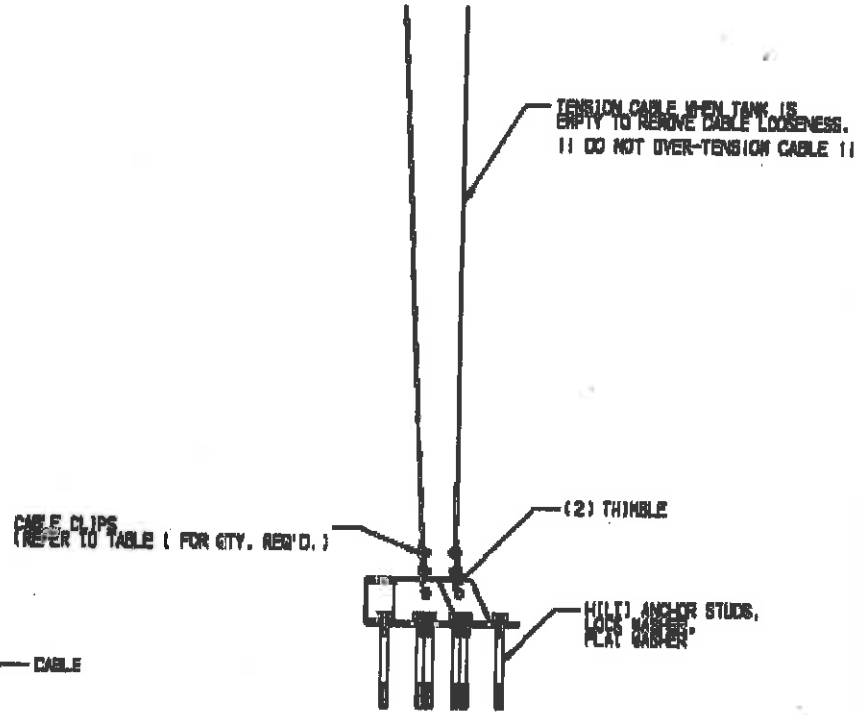

CODES:
- CBC 2010
- IBC 2009
- ASCE 7.05
- AISC 13TH EDITION

SEISMIC DESIGN:
Zip Code = 92701, Site class D - Fa=1.0, Fv=1.5,
Ss = 1.4, S1 = 0.5, I = 1.5, R = 3.0
Fp=(Vi*Wi+Vc*Wc/(We+Wc*SG) = 0.445 W

WIND DESIGN:
IBC/CBC - 150 MPH
Qz = 0.00256KzKztKdV^2I = 58.14 PSF
(Kz = 0.85, Kzt = 1.0, Kd = 0.95, I = 1.25)

GENERAL:
1. ALL CONSTRUCTION SHALL MEET LOCAL BUILDING CODE REQUIREMENTS AND BE APPROVED BY THE BUILDING OFFICIAL.
2. THESE GUIDELINES HAVE BEEN PROVIDED TO SPECIFY THE RESTRAINT RECOMMENDATIONS FOR SNYDER INDUSTRY BULK STORAGE TANKS.

CONCRETE:
1. CONCRETE SHALL HAVE A MINIMUM DESIGN AS PER DRAWING REFERENCED IN SPECIFICATION CHART BELOW.
2. CONCRETE PAD DESIGN SHOULD BE REVIEWED AND APPROVED BY THE BUILDING OFFICIAL BASED ON SPECIFIC APPLICATION AS OTHER DESIGN PARAMETERS ARE POSSIBLE DEPENDING UPON SITE CONDITIONS.

STRUCTURAL STEEL:
1. ALL STRUCTURAL STEEL COMPONENTS SHALL BE NEW AND OF BASIC OPEN HEARTH PROCESS STEEL CONFORMING TO ALL APPLICABLE REQUIREMENTS OF ASTM A36 (STRUCTURAL STEEL FOR BRIDGES AND BUILDINGS - Fy = 36,000 PSI.).
2. ALL ARC WELDING ELECTRODES SHALL CONFORM TO ASTM A233 FOR STEEL ARC WELDING ELECTRODES. ELECTRODES SHALL BE AS RECOMENDED BY THE MANUFACTURES FOR THE POSITIONS AND OTHER CONDITIONS OF ACTUAL USE. WELDING SHALL CONFORM TO REQUIREMENTS OF AMERICAN WELDING SOCIETY AWS D121.
3. ALL SHARP EDGES AND CORNERS SHALL BE REMOVED ON ALL STRUCTURAL STEEL COMPONENTS.
4. CABLES TO BE 7X19 STRANDED CORE CONSTUCTION SIZED PER CHART. MATERIAL TO BE SPECIFIED BY CUSTOMER ORDER (MINIMUM BREAKING STRENGTH EQUAL TO OR GREATER THAN 304 SS RATING).
5. ANCHOR BOLTS TO BE HILTI ADHESIVE ANCHORS, MODEL HIT-RE 500-SD WITH SIZE, MATERIAL, AND EMBEDMENT AS SPECIFIED PER SPECIFICATION CHART BELOW.
   ALL OTHER FASTENER MATERIALS MUST CORRESPOND TO THE TYPE OF ANCHOR SELECTED.

Lotycz, Matt

From: Eckel, Caroline H.
Sent: Tuesday, November 18, 2014 3:10 PM
To: Lotycz, Matt
Subject: Moabi

Hey Matt,

VOID

Are you designing the pad for the water storage tanks?

Right now I am looking at two tanks, 10' in diameter, 11' tall, cylindrical. About 5000 gallons in each. They will be piped together so maybe 7 or so feet between them.

I will also have a packaged skid with the booster pumps on it (I don't know the size yet) and a bladder tank (waiting on size from Brian).

Caroline Eckel, PE | Engineer | caroline.eckel@arcadis-us.com

ARCADIS U.S., Inc. | One SeaGate, Suite 700 | Toledo, Ohio 43604
M: 419 392 1479 | T: 419 213 1615 | F: 419 473 2108
www.arcadis-us.com

ARCADIS, Imagine the result

Please consider the environment before printing this email.

Lotycz, Matt

From: Eckel, Caroline H
Sent: Friday, November 21, 2014 3:31 PM
To: Lotycz, Matt
Subject: FW: Topock CHQ 5000gal Tank Specs
Attachments: seismic restraint.JPG; 5000 gal snyder tank.pdf

Seismic info

From: O'Brien, Maureen
Sent: Friday, November 21, 2014 11:35 AM
To: Eckel, Caroline H.
Cc: Baxter, Jonathan
Subject: Topock CHQ 5000gal Tank Specs

Hi Caroline,

Please find attached the specifications for the 5000 gal tanks needed for the CHQ. The .jpg file is the info for their seismic restraints.

Let me know if you have any questions.

Thank you!
Maureen

Maureen O'Brien | Remediation Specialist | Maureen.O'Brien@arcadis-us.com

ARCADIS U.S., Inc. | 126 N. Jefferson St., Suite 400 | Milwaukee, WI 53202
T: 414.277.6205
www.arcadis-us.com

ARCADIS, imagine the result
Please consider the environment before printing this email.

Reference:G:\Project\RC000753.0008\Dept\Structural\MathCAD\Seismic Calculations\Arcadis_Units.mcd(R)

Topok, California 5,000 Gal Tank Seismic Loads

References

American Institute of Steel Construction
AISC 13th edition construction manual.
AISC 360-05 Steel structure design specification.
American Society of Civil Engineers
ASCE 7-10
California Building Code
CBC 2013
USGS Seismic Design Maps -
http://earthquake.usgs.gov/hazards/designmaps/usdesign.php
Earthquake Hazard Program - Seismic Design Maps and Tools for Buildings
Ground Motion Parameter Calculator - Version 3.0.1, last updated 12 July 2012.
Performance Pipe
First Edition - Field Handbook, August 2009, Chevron Phillips Chemical Co.
American Water Works Association
AWWA D103-09 - Bolted Carbon Steel Tanks For Water Storage

Goal of this package of calculations

This set of calculations has been performed for the following purposes:

1. To calculate seismic response coefficients (C_s) that can be applied to 5,000 Gal tank operational weights to determine lateral load effects on anchorage due to seismic events.

Summary of Findings:

1 Calculations use ASCE 7-10 and AWWA D103-09 as two methods in determining seismic response coefficients (C_s).

ARCADIS

Imagine the result

Determine Acceleration Coefficients

Zip code of work: [redacted]

$S_1 := 0.120$ $S_s := 0.230$

Use with USGS ground motion calculator

From ASCE 7, chapter 11 (below):

11.4.2 Site Class. Based on the site soil properties, the site shall be classified as Site Class A, B, C, D, E, or F in accordance with Chapter 20. Where the soil properties are not known in sufficient detail to determine the site class, Site Class D shall be used unless the authority having jurisdiction or geotechnical data determines Site Class E or F soils are present at the site.

Use Site Class "D"

ASCE 7-10 Table 11.4-2

Use $F_v := 2.4$

ASCE 7-10 Table 11.4-1

Use $F_a := 1.8$

$S_{DS} := \frac{2}{3} \cdot F_a \cdot S_s$ $S_{DS} = 0.25$ ✓

$S_{D1} := \frac{2}{3} \cdot F_v \cdot S_1$ $S_{D1} = 0.19$ ✓

2:49 PM
12/19/2014

Determine Seismic Design Category

ASCE 7-10 Table 11.6-1 & 2 SDC "C" for Sds and "D" for Sd1 Since occupancy IV $I_E := 1.5$

Analysis based on AWWA D103-09: Ground Supported Flat Bottom Tanks

See attached AWWA Standard

$D := 8.5ft$ ✓ Tank Diameter $V := 5000gal$ ✓ Tank Capacity

$H := \frac{4 \cdot V}{\pi \cdot D^2}$ Fluid height in Tank $H = 11.78ft$ ✓

$T_c := 2 \cdot \pi \cdot \sqrt{\frac{D}{3.68 \cdot g \cdot \tanh\left(3.68 \cdot \frac{H}{D}\right)}}$ $T_c = 1.68s$ First mode of sloshing wave period AWWA EQ 14-18

$T_L := 8s$ AWWA Figure 17 $T_s := \frac{S_{D1}}{S_{DS}} = 0.78\ s$ $C_t := .02$ $x := .75$

$T_a := C_t \cdot H^x$ $T_i := T_a$ $T_i := 0.145\ s$

$0 < T_i < T_s$ $S_{ai} := S_{DS}$ per AWWA 14.2.8.6.1 $S_{ai} = 0.25$ ---Use

FYI T.s < T.i <T.L $S_{ai2} := \frac{S_{DS}}{T_i} = 1.69$ ▮ > ▮ = ▮ $S_{DS} = 0.25$ ---Use

$R_i := 3$ per AWWA table 6, Impulsive component of mechanically anchored tanks

$R_c := 1.5$ per AWWA table 6, Convective component of mechanically anchored tanks

$A_i := \max\left(\frac{S_{ai} \cdot I_E}{1.4 \cdot R_i}, \frac{0.36 \cdot S_1 \cdot I_E}{R_i}\right)$ $A_i = 0.09$ impulsive acceleration

$T_c < T_L$ $S_{ac} := \frac{1.5 \cdot S_{D1} \cdot 1s}{T_c}$ $S_{ac} = 0.17$ ▮ < ▮ $S_{DS} = 0.25$ AWWA EQ 14-12

$A_c := \frac{S_{ac} \cdot I_E}{1.4 \cdot R_c}$ $A_c = 0.12$ Convective acceleration

Use this value (Controls)

$C_{sAWWA} := \sqrt{A_i^2 + A_c^2}$ $C_{sAWWA} = 0.15$ Check this value against ASCE 7-10 per Chapter 15 ✓

Load analysis of Ground Supported Tanks containing Liquid: ASCE 7-10

Refer to ASCE 7-10, chapter 15

From 15.4.1b of ASCE 7

Non-building structures shall be designed in compliance with Sections 15.5 and 15.6 to resist minimum seismic lateral forces that are not less the requirements of Section 12.8 with the following additions and exceptions identified in 15.4.1-1 & 2.

Table 15.4-2 - Structures not similar to buildings

For Flat bottom tanks, Bolted Steel, see Design and Detailing Requirements of 15.7 $R := 3.0$ Mechanically anchored tank. See Table on next sheet.

Determine Fundamental Period of Tank:

$D = 8.5\,ft$ Tank Diameter

$V = 5000\,gal$ Tank Capacity

$H = 11.78\,ft$ Fluid height in Tank

$T := T_c$ $T = 1.68\,s$ Tank Period

$S_1 = 0.12$ $I_E = 1.5$ $R = 3$

Per ASCE 7-05 15.4.1.2 $C_{smin1} := .044 S_{DS} \cdot I_E = 0.02$ ASCE 7 EQ 15.4-1

which is greater than 0.03 MIN

$C_{smin2} := \dfrac{0.8 \cdot S_1}{\dfrac{R}{I_E}}$ $C_{smin2} = 0.05$ ASCE 7 EQ 15.4-2 Not Applicable

because $S_1 = 0.12$ $< S_{1a} := 0.6$

$T_a := T \cdot \dfrac{1}{s}$ $T_a = 1.68$

From Section 12.8 ASCE 7-10 $C_s := \dfrac{S_{DS}}{\dfrac{R}{I_E}}$ $C_s = 0.12$ ✓

$R = 3$ $T_L := 12$ $C_{smax} := \dfrac{S_{D1}}{T_a \cdot \dfrac{R}{I_E}}$ $C_{smax} = 0.06$ Ignore

Min Base Shear Force to foundation per 12.8 $V := C_s \cdot W$ $V = 0.12W$

Controlling Seismic Response Coefficient is Cs =0.15 of AWWA D103 ✓

$W_i := 42.975kip$ Operating Weight of EQ Tank (tank DL and water)

From Section 12.8 ASCE 7-10 $V := C_{sAWWA} \cdot W_t = 6.46 \cdot kip$ ✓

ASCE 7-10 Section 15.7.6

$(0 < T_i < T_s)$ $(S_{ai} := S_{DS})$ per ASCE 7-10 Eq 15.7-7 $(S_{ai}) = 0.25$

$T_c < T_L$ $S_{ac} := \frac{1.5 \cdot S_{D1} \cdot 1s}{T_c}$ per ASCE 7-10 Eq 15.7-10

$S_{ac} = 0.17$, < , $1.5x \quad S_{DS} = 0.25$

$W_i := 42.975kip$ ✓ Operating Weight of EQ Tank (tank DL and water)

$V_i := \frac{(S_{ai} \cdot W_i)}{\left(\frac{R}{I_E}\right)} = 5271.6\,lbf$ per ASCE 7-10 Eq 15.7-5

$W_c := 25.14kip$ Weight of Effective Mass of First Mode of Sloshing

$V_c := \frac{(S_{ac} \cdot I_E \cdot W_c)}{1.5} = 4300.6\,lbf$ per ASCE 7-10 Eq 15.7-6

Sesimic Base Shear = $V_t := \left(V_i^2 + V_c^2\right)^{0.5} = 6.8 \cdot kip$ ✓

Sum of the squares per ASCE 7-10 Section 15.7.6.1-e

Sliding Resistance (un-anchored) per ASCE 7-10 Eq 15.7-14

$V_t < W_t \tan(30deg)$ $W_t := 42.975kip$ $\tan(30deg) = 0.58$

$V_t = 6.8 \cdot kip$, < , $W_t \tan(30deg) = 24.81 \cdot kip$ OK

Job Title: Topok, CA - 5,000 Gal Fire Water Tank

Design of Water Storage Tanks in Seismic Regions

$I_E := 1.5$ — *SEISMIC IMPORTANCE FACTOR*

$F_a := 1.6$ — *SHORT PERIOD SITE COEFFICIENT*

$F_v := 2.4$ — *LONG PERIOD SITE COEFFICIENT*

$S_s := 0.230$ — *MAPPED MAX. CONSIDERED EARTHQUAKE SPECTRAL RESPONSE ACCELERATION AT 0.2 SEC PERIOD FOR SITE CLASS B*

$S_1 := 0.120$ — *MAPPED MAX. CONSIDERED EARTHQUAKE SPECTRAL RESPONSE AT 1-SEC PERIOD FOR SITE CLASS B*

$S_{MS} := F_a \cdot S_s = 0.37$ — *MAXIMIMUM CONSIDERED EARTHQUAKE SPECTRAL RESPONSE ACCELERATION AT 0.2 SEC PERIOD*

$S_{M1} := F_v \cdot S_1 = 0.29$ — *MAXIMUM CONSIDERED EARTHQUAKE SPECTRAL RESPONSE ACCELERATION AT 1 SEC PERIOD*

$U := \frac{2}{3}$ — *SCALING FACTOR TO SCALE THE MAX. CONSIDERED EARTHQUAKE RESPONSE ACCELERATION TO THE DESIGN RESPONSE ACCELERATION*

$S_{DS} := U \cdot S_{MS} = 0.25$ — *DESIGN EARTHQUAKE SPECTRAL RESPONSE ACCELERATION AT 0.2-SEC PERIOD*

$S_{D1} := U \cdot S_{M1} = 0.19$ — *DESIGN EARTHQUAKE SPECTRAL RESPONSE ACCELERATION AT 1-SEC PERIOD*

$$T_s := \frac{S_{D1}}{S_{DS}} = 0.78$$

$T_i := 0.145$ ✓ $T_L := 8$ ✓

$$S_{ai} := \begin{cases} S_{DS} & \text{if } 0 \le T_i \le T_s \\ \left(\frac{S_{D1}}{T_i}\right) & \text{if } T_s \le T_i \le T_L \\ \frac{T_L \cdot S_{D1}}{T_i^2} & \text{otherwise} \end{cases}$$

DESIGN SPECTRAL RESPONSE ACCELERATION FOR IMPULSIVE COMPONENTS AT THE NATURAL FREQUENCY OF THE STRUCTURE

$S_{ai} = 0.25$

$K := 1.5$

DAMPING SCALING FACTOR

$D := 8.5ft$ ✓ $Volume := 5000gal$ ✓ $H := \frac{4 \cdot Volume}{\pi \cdot D^2} = 11.78\,ft$ $H_{tank} := 11.78ft$ ✓

$$T_c := \frac{1}{s} \cdot 2 \cdot \pi \cdot \sqrt{\frac{D}{3.68 \cdot g \cdot \tanh\left(\frac{3.68 \cdot H}{D}\right)}} = 1.68$$

$$S_{ac} := \begin{cases} \frac{K \cdot S_{D1}}{T_c} & \text{if } T_c \le T_L \\ \frac{K \cdot T_L \cdot S_{D1}}{T_c^2} & \text{otherwise} \end{cases}$$

DESIGN SPECTRAL RESPONSE ACCELERATION FOR THE CONVECTIVE COMPONENT AT THE FIRST MODE SLOSHING WAVE PERIOD

$S_{ac} = 0.17$

$\boxed{R_i := 3}$ ✓ $\boxed{R_c := 1.5}$ ✓ $G := 1.0$ *SPECIFIC GRAVITY OF WATER*

Mechanically-Anchored

$$A_i := \max\left[\left(\frac{S_{ai} \cdot I_E}{1.4 \cdot R_i}\right), \left(\frac{0.36 \cdot S_1 \cdot I_E}{R_i}\right)\right] = 0.09$$

IMPULSIVE DESIGN ACCELERATION

$$A_c := \frac{S_{ac} \cdot I_E}{1.4 \cdot R_c} = 0.12 \qquad \frac{D}{H} = 0.72 > 1.33$$

CONVECTIVE DESIGN ACCELERATION

$$W_t := 62.4pcf \cdot G \cdot H \cdot \left(\frac{\pi \cdot D^2}{4}\right) = 41.71 \cdot kip$$

TOTAL WEIGHT OF TANK CONTENTS

$$W_c := 0.230 \cdot \frac{D}{H} \cdot \tanh\left(3.67 \cdot \frac{H}{D}\right) \cdot W_t = 6.92 \cdot kip$$

WEIGHT OF EFFECTIVE MASS OF FIRST MODE OF SLOSHING

$$W_i := \begin{cases} \dfrac{\tanh\left(\dfrac{0.866 \cdot D}{H}\right)}{\left(\dfrac{0.866 \cdot D}{H}\right)} \cdot W_t & \text{if } \dfrac{D}{H} \geq 1.333 \\ W_t\left(1.0 - \dfrac{0.218 \cdot D}{H}\right) & \text{otherwise} \end{cases}$$

WEIGHT OF EFFECTIVE MASS OF TANK CONTENTS THAT MOVES WITH TANK SHELL

$$W_i = 35.15 \cdot kip$$

$$X_i := \begin{cases} 0.375 \cdot H & \text{if } \dfrac{D}{H} \geq 1.333 \\ \left(0.5 - \dfrac{0.094 \cdot D}{H}\right) \cdot H & \text{otherwise} \end{cases}$$

HEIGHT FROM BOTTOM OF SHELL TO CENTROID OF LATERAL SEISMIC FORCE APPLIED THROUGH THE IMPULSIVE WEIGHT

$$X_i = 5.09 \cdot ft$$

$$X_c := \left[1.0 - \frac{\cosh\left(\dfrac{3.67 \cdot H}{D}\right) - 1}{\left(\dfrac{3.67 \cdot H}{D}\right) \cdot \sinh\left(\dfrac{3.67 \cdot H}{D}\right)}\right] \cdot H = 9.49 \cdot ft$$

HEIGHT FROM BOTTOM OF SHELL TO THE CENTROID OF LATERAL SEISMIC FORCE APPLIED TO THE EFFECTIVE CONVECTIVE WEIGHT

$$X_s := 0.5 \cdot H_{tank} = 5.89 \cdot ft$$

HEIGHT FROM BOTTOM OF SHELL TO CENTER OF MASS OF TANK

$W_s := 0.85kip$ ✓

$W_r := 200lbf$ ✓

$H_t := H_{tank} = 11.78 \cdot ft$

$$M_s := \sqrt{\left[A_i \cdot \left(W_s \cdot X_s + W_r \cdot H_t + W_i \cdot X_i\right)\right]^2 + \left(A_c \cdot W_c \cdot X_c\right)^2}$$

$M_s = 18.19 \cdot ft \cdot kip$

DESIGN OVERTURNING MOMENT AT THE BOTTOM OF THE SHELL CAUSED BY HORIZONTAL DESING ACCELERATION

$W_f := 200lbf$ ✓

WEIGHT OF TANK BOTTOM

$$X_{cmf} := \left[1.0 - \frac{\cosh\left(\frac{3.67 \cdot H}{D}\right) - 1.937}{\left(\frac{3.67 \cdot H}{D}\right)\sinh\left(\frac{3.67 \cdot H}{D}\right)}\right] \cdot H = 9.52 \cdot ft$$

HEIGHT FROM BOTTOM OF SHELL TO THE CENTROID OF THE EFFECTIVE CONVECTIVE WEIGHT ADIJUSTED TO FOR VARYING BOTTOM PRESSURES

$$V_F := \sqrt{\left[A_i \cdot \left(W_s + W_r + W_f + W_i\right)\right]^2 + \left[\left(A_c \cdot W_c\right)^2\right]}$$

$V_F = 3.3 \cdot kip$

DESIGN SHEAR AT THE TOP OF THE FOUNDATION DUE TO HORIZONTAL DESIGN ACCELERATION

$M_s = 18.19 \cdot ft \cdot kip$

DESIGN OVERTURNING MOMENT AT TOP OF THE FOUNDATION FOR TANKS SUPPORTED BY RINGWALL FOUNDATIONS

$$X_{imf} := \begin{cases} 0.375 \cdot \left[1.0 + 1.333 \left(\dfrac{0.866 \cdot \frac{D}{H}}{\tanh\left(\frac{0.866 \cdot D}{H}\right)} - 1.0 \right)\right] \cdot H & \text{if } \dfrac{D}{H} \geq 1.333 \\ \left[\left(0.50 + 0.06 \dfrac{D}{H}\right) H\right] & \text{otherwise} \end{cases}$$

$X_{imf} = 6.4 \cdot ft$

$$M_{mf} := \sqrt{\left[A_i \cdot \left(W_s \cdot X_s + W_r \cdot H_t + W_i \cdot X_{imf}\right)\right]^2 + \left(A_c \cdot W_c \cdot X_{cmf}\right)^2}$$

$M_{mf} = 21.89 \cdot ft \cdot kip$ *DESIGN OVERTURNING MOMENT AT TOP OF THE FOUNDATION FOR TANKS SUPPORTED BY MAT FOUNDATIONS*

OVERTURNING RATIO

$w_t := 45.7plf$ ✓

the equations may not be meant to include units? as below

$G := 1 \quad t_b := .375 \quad F_y := 36000 \quad H := 11.5$ ✓ $\quad D := 8.5$ ✓

$w_L := 7.9 \cdot t_b \cdot \sqrt{(F_y \cdot H \cdot G)} = 1906.16 \qquad W_{Lmax} := 1.28 \cdot H \cdot D \cdot G = 125.12$

Therefore $w_{Luse} := 125.12plf$

$A_v := 0.14 \cdot S_{DS} = 0.03$

$$J := \frac{M_s}{\left[D^2 \cdot \left[w_t \cdot \left(1 - .4 \cdot A_v\right) + w_{Luse}\right]\right]} = \blacksquare \cdot ft^2 \qquad 1.479 \blacksquare > \blacksquare \quad 0.785$$ ✓

Therefore, there is shell uplift due to overturning moment and the tank needs to be anchored into the slab

SLIDING CHECK

$V_{allow} := \tan(30°) \cdot \left(W_s + W_r + W_i + W_c\right) \cdot \left(1 - 0.4A_v\right) = 24.55 \cdot kip \quad \blacksquare > \blacksquare \quad V_F = 3.3 \cdot kip$ ✓

Therefore, allowable lateral shear is greater than design shear at the top of the foundation due to horizontal design acceleration V.F and therefore a self-anchored tank is acceptable

(5,000 GAL TANK CON'T)

0.85 ≤ 15 ft TABLE 29.3-1

0.95 ROUND - TABLE 26.6-1

WIND LOADS = $q_z = 0.00256\, K_z K_{zt} K_d V^2 = 27.30$ psf FACT

FIGURE 26.8-1 (1.0) — 115 mph

ASCE 7-10 CHAPT 29 - WIND LOADS ON OTHER STRUCTURES - MWFRS

$F = q_z G C_f A_f = (27.3\text{psf})(0.85)(0.71)(8.5^{ft} \times 12.75^{ft}) = 1.79^{K}$ FACT

0.85

FIGURE 29.5-1 ~ $D\sqrt{q_z} = 44.4 > 2.5$, $h/D = 1.50$, ROUGH, $C_f = 0.71$

LOAD COMBINATIONS (ASCE 7-10 - 2.4 ALLOWABLE & 2.3 FACTORED)

(2.4 ALLOWABLE LOADS)

(5) $D + F + 0.7E \rightarrow (1.0 + 0.14 S_{DS})D + F + 0.7E =$ (1,034; 1250#; 41,725#; 0.7 × 6.80K)

$= 43{,}018\ \# \downarrow$ & $4.76^{K} \rightarrow$ @ 11.78 ft/2 ARM

(7) $0.6D + 0.6W \rightarrow 0.6(1250\#)\downarrow + 0.6(1790\#) \rightarrow$

$= 750\# \downarrow$ & $1074\ \# \rightarrow$ @ 12.75 ft/2 ARM

(8) $0.6D + 1.0F + 0.7E \rightarrow (0.6 - 0.14 S_{DS})D + 1.0F + 0.7E$

0.565D

$= 42.43^{K} \downarrow$ & $4.76^{K} \rightarrow$ @ 11.78 ft/2 ARM

(2.3 FACTORED LOADS)

(5) $1.2D + 1.0F + 1.0E \rightarrow (1.2 + 0.2 S_{DS})D + 1.0F + 1.0E$ (1,249)

$= 43.29^{K} \downarrow$ & $6.80^{K} \rightarrow$ @ 11.78 ft/2 ARM

(6) $0.9D + 1.0W \rightarrow 0.9(1250\#)\downarrow + 1.0(1790\#) \rightarrow$

$1125\# \downarrow$ & $1790\ \# \rightarrow$

(7) $0.9D + 0.9F + 1.0E \rightarrow [(0.9 - 0.2 S_{DS})D + F]_{CONSERV} + 1.0E$

0.851

$= 36.57^{K} \downarrow$ & 6.80^{K} @ 11.78 ft/2 ARM

ARCADIS

SUBJECT: TOPOK- UTILITY PAD

JOB NO:

BY: MSL DATE: 12/22/14

CHKD: DATE:

PAGE H-19

SHEET 1

BEARING CAPACITY ~ 5,000 GAL TANK

- ASSUME 1'-2" THICK SLAB
- ASSUME 9'-10" SQ SLAB

→ TANK FULL ~ (D+F+0.7E) = 43.02K ↓ & 4.76K →

- M_{OT} = 4.76K → × ($\frac{11.78 FT}{2}$ + 1'-2") = 33.59 K·FT UNF ↻
  7.06 FT ARM
- ΣP = 43.018K + [(9'-10" SQ)² × 1.167' × 150pcf × 1.634] = 60.52K ↓
- A = 96.69 FT², y = 4.92 FT, I = $\frac{bh^3}{12}$ = 779.14 FT⁴
- q = P/A + My/I = 626 psf +/- 212 psf → 838 KSF OR 414 KSF

1500psf > NETALLOWABLE ✓OK

→ TANK EMPTY (0.6D+0.6W)

- M_{OT} = 1074# × ($\frac{12.75 FT}{2}$)ARM = 6.85 K·FT
- ΣP = 1250# + (9.83 FT² × 1.167 FT × 150pcf × 0.6) = 11.41K
- q = P/A +/- My/I = 118.0 psf +/- 43.3 psf → 161.3 psf OR 74.7 psf ✓OK

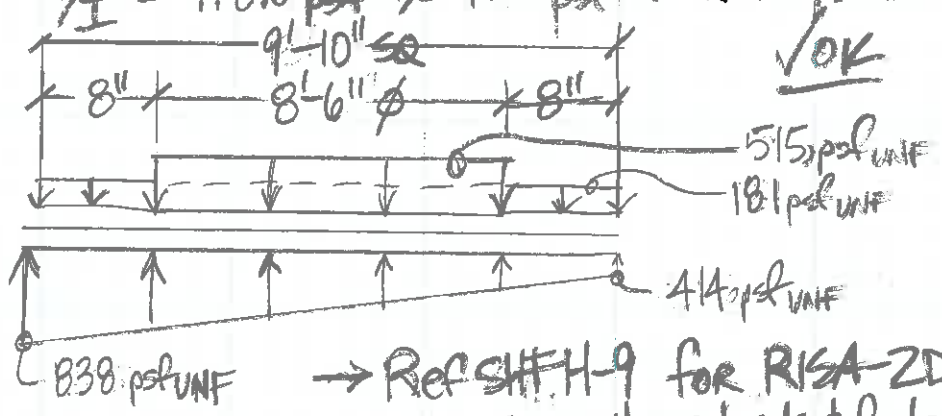

→ Ref SHT H-9 for RISA-2D SINCE those loads & footprints ARE larger

6.157K ~ 414 psf = 4.071K
838-414 = 2.085K
6.156K

AGM Form 30 12-01

ARCADIS

SUBJECT: UTILITY PAD

JOB NO:

BY: MSL DATE: 12/22/14

CHKD: DATE:

PAGE H-20

SHEET 1

~ BY INSPECTION ~ 1'-2" THICK w/ #5@10" c/c (@ 3" COVER BOT & 2" COVER TOP) IS SUFFICIENT FOR $M_{UNF} = 2.18^{K\cdot FT}$ & $V_{UNF} = 1.01^K$

d = 10.1"

d = 11.1"

~ ACI 350 T&S SHRINK REQ'S ~ POURS OF 33' & 30'

$$A_{S\,REQ'D} = \frac{0.0046h}{2\ FACES} = 0.34\ IN^2/FT < \#5@10"\ c/c\ (A_S = 0.37\ IN^2/FT)$$

~ GRAVITY LOADS = $43.02^K \downarrow / \left(\frac{\pi \times 8.5^{FT\,2}}{4}\right) = 758\ psf < 1325\ psf$ ✓OK

1500 psf − (1.167' × 150 pcf)

SHT H-22 → (4) − 3/4"ø ADHESIVE ANCHORS (1 PER CLIP ANGLE)

TANK ANCHORAGE

• LC#8 ~ 0.6D+F+0.7E (SEISMIC) → $V_{REQ'D} = 4.76^K / 4\ ANCHORS = 1.19^K_{UNF},\ 1.70^K_{ACI}$

$M_{OT} = 4.76^K \times \left(\frac{11.78\ FT}{2}\right)_{ARM} = 28.04^{K\cdot FT}_{UNF}$

$M_{RES} = 42.43^K \times \left(\frac{8.5\ FT}{2}\ TANK\ ø\right) = 180.33^{K\cdot FT}_{UNF}$

∴ $M_R > M_{OT}$ ~ NO TENSION IN ANCHORS F_S OVERTURNING = 6.43 > 1.5 ✓OK

• LC#7 ~ 0.6D+0.6W (WIND) → $M_{OT} = 1.074^K \times \left(\frac{12.75\ FT}{2}\right)_{ARM} = 6.847\ K\cdot FT$

$M_{RES} = 750^{\#} \times \left(\frac{12.75\ FT}{2}\right) = 4.78^{K\cdot FT}$

~ SINCE $M_{OT} > M_{RES}$ ~ TENSION IN ANCHORS

$$T_{REQ'D} = \frac{(M_{OT} \times 1.5\ SF) - M_{RES}}{TENSION \times 8.5\ FT} = 0.646^K_{UNF} \times \left(\frac{1.0W}{0.6W}\right)$$

$= 1.08^K_{ACI}$ REQ'D IN (2) − 3/4"ø. HILTI SD-500 ADHESIVE ANCHORS PER TENSION CABLE STRAP

*Ref SHT H-12 FOR HILTI PROFILS FOR MORE CONSTRAINING LOADS $T_{ACI} = 3.66^K \uparrow$, $V_{ACI} = 1.01^K \rightarrow$

$$V_{REQ'D} = \frac{1.074^K}{4\ ANCHORS} = 0.27^K_{UNF},\ 0.45^K_{ACI}$$ ← 4 CLIP ANGLES (1) 3/4"ø ADHESIVE ANCHOR PER CLIP ANGLE

AGM Form 30 12-01

ARCADIS

SUBJECT: UTILITY PAD

JOB NO:

BY: MSL DATE: 12/22/14

CHKD: DATE:

PAGE H-21

SHEET 1

(TANK ANCHORAGE CONT)

• LC#7 – 0.9D+0.9F+1.0E = 36.57K↓ & 6.80K @ $\frac{11.78FT}{2}$ ARM

• $V_{DES} = \frac{6.80K}{4 \text{ ANCHORS}} = 1.70K_{ACT}$ ← (1) 3/4"ø ADHESIVE ANCHOR PER 4 CLIPANGLES

• $M_{OT} = 6.80K \times \left(\frac{11.78FT}{2}\right)_{ARM} = 40.05K \cdot FT$

• $M_{RES} = 36.57K \times \frac{8.5FT}{2} = 155.4 \text{ K}\cdot\text{FT}$ ~ FS = 3.88 > 1.5 ✓OK

~ NO TENSION IN ANCHORS

* REF SHT H-13 FOR MORE CONSTRAINING SHEAR LOAD = $4.33K_{ACT}$ IN (1) 3/4"ø ADHESIVE ANCHOR

AGM Form 30 12-01

H-22

www.hilti.us

Profis Anchor 2.4.8

Company:	ARCADIS	Page:	1
Specifier:	Matt Lotycz	Project:	Topok, CA PG&E - HQ
Address:		Sub-Project I Pos. No.:	HQ Utility Pad
Phone I Fax:	I	Date:	12/22/2014
E-Mail:			

Specifier's comments: 5,000 Gal Tank Anchorage - Max Seismic shear

1 Input data

Anchor type and diameter:	**HIT-RE 500-SD + HAS B7 3/4**
Effective embedment depth:	$h_{ef,act}$ = 10.000 in. ($h_{ef,limit}$ = - in.)
Material:	ASTM A 193 Grade B7 SAME CAPACITY FOR 316 SST
Evaluation Service Report:	ESR-2322
Issued I Valid:	2/1/2014 | 4/1/2016
Proof:	design method ACI 318-11 / Chem
Stand-off installation:	e_b = 0.000 in. (no stand-off); t = 0.500 in.
Anchor plate:	l_x x l_y x t = 8.000 in. x 9.000 in. x 0.500 in.; (Recommended plate thickness: not calculated)
Profile:	S shape (AISC); (L x W x T x FT) = 3.000 in. x 2.330 in. x 0.170 in. x 0.260 in.
Base material:	cracked concrete, 4000, f_c' = 4000 psi; h = 14.000 in., Temp. short/long: 130/110 °F
Installation:	hammer drilled hole, installation condition: dry
Reinforcement:	tension: condition B, shear: condition B; no supplemental splitting reinforcement present edge reinforcement: > No. 4 bar
Seismic loads (cat. C, D, E, or F)	Tension load: yes (D.3.3.4.3 (d)) Shear load: yes (D.3.3.5.3 (c))

Geometry [in.] & Loading [lb, in.lb]

LC#8 ~ 0.6D+1.0F+0.7E

SEISMIC

$1.7^{K}_{ACI} \times \Omega = 2.5$ OVERSTRENGTH

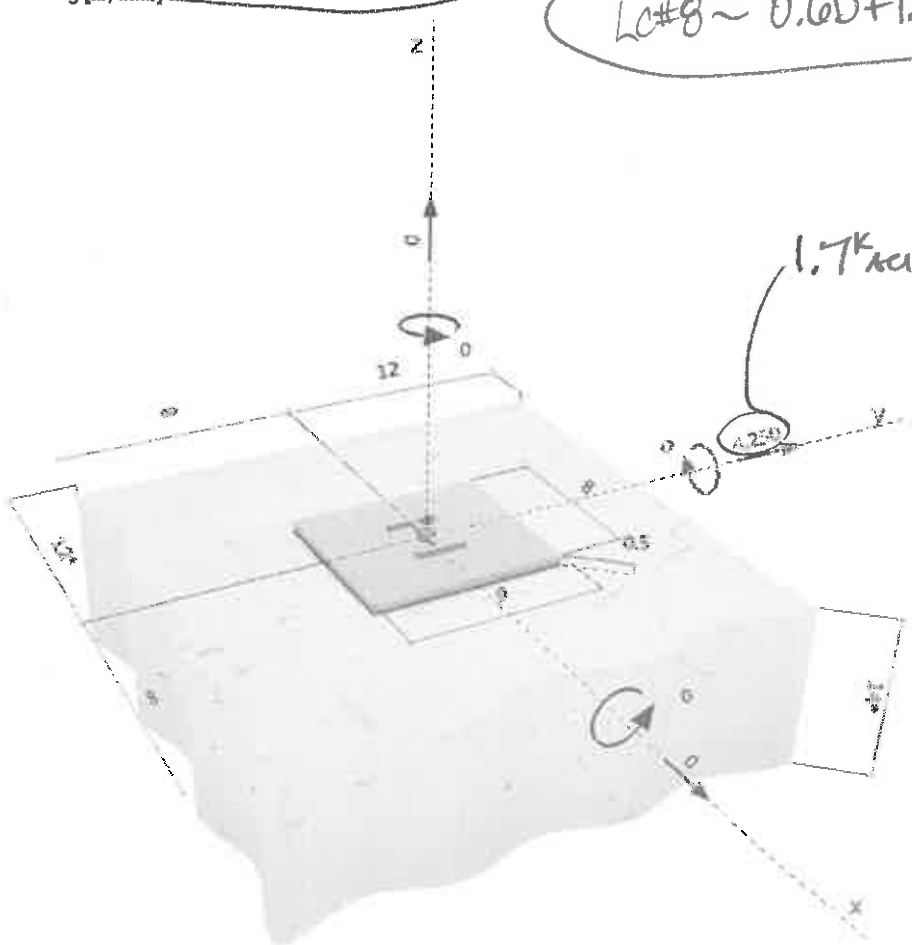

PROFIS Anchor (c) 2003-2009 Hilti AG, FL-9494 Schaan Hilti is a registered Trademark of Hilti AG, Schaan

Company:	ARCADIS	Page:	2
Specifier:	Matt Lotycz	Project:	Topok, CA PG&E - HQ
Address:		Sub-Project I Pos. No.:	HQ Utility Pad
Phone I Fax:	|	Date:	12/22/2014
E-Mail:			

2 Load case/Resulting anchor forces

Load case: Design loads

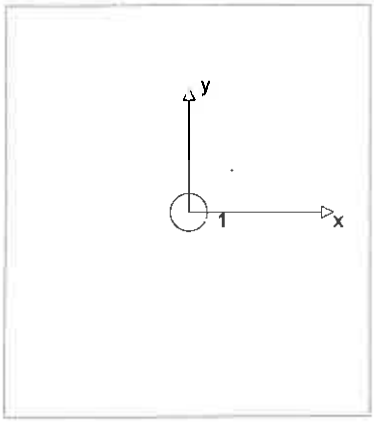

Anchor reactions [lb]
Tension force: (+Tension, -Compression)

Anchor	Tension force	Shear force	Shear force x	Shear force y
1	0	4250	0	4250

max. concrete compressive strain: - [‰]
max. concrete compressive stress: - [psi]
resulting tension force in (x/y)=(0.000/0.000): 0 [lb]
resulting compression force in (x/y)=(0.000/0.000): 0 [lb]

3 Tension load

	Load N_{ua} [lb]	Capacity ϕN_n [lb]	Utilization $\beta_N = N_{ua}/\phi N_n$	Status
Steel Strength*	N/A	N/A	N/A	N/A
Bond Strength**	N/A	N/A	N/A	N/A
Sustained Tension Load Bond Strength*	N/A	N/A	N/A	N/A
Concrete Breakout Strength**	N/A	N/A	N/A	N/A

* anchor having the highest loading **anchor group (anchors in tension)

PROFIS Anchor (c) 2003-2009 Hilti AG, FL-9494 Schaan Hilti is a registered Trademark of Hilti AG, Schaan

4 Shear load

	Load V_{ua} [lb]	Capacity ϕV_n [lb]	Utilization $\beta_V = V_{ua}/\phi V_n$	Status
Steel Strength*	4250	11414	38	OK
Steel failure (with lever arm)*	N/A	N/A	N/A	N/A
Pryout Strength (Bond Strength controls)**	4250	7397	58	OK
Concrete edge failure in direction y+**	4250	13147	33	OK

* anchor having the highest loading **anchor group (relevant anchors)

4.1 Steel Strength

$V_{sa} = \alpha_{V,seis} (n\ 0.6\ A_{se,V}\ f_{uta})$ refer to ICC-ES ESR-2322

$\phi\ V_{steel} \geq V_{ua}$ ACI 318-11 Table D.4.1.1

Variables

n	$A_{se,V}$ [in.^{2}]	f_{uta} [psi]	$\alpha_{V,seis}$	$(n\ 0.6\ A_{se,V}\ f_{uta})$ [lb]
1	0.33	125000	0.700	25086

Calculations

$V_{sa,eq}$ [lb]
17560

Results

$V_{sa,eq}$ [lb]	ϕ_{steel}	$\phi\ V_{sa}$ [lb]	V_{ua} [lb]
17560	0.650	11414	4250

4.2 Pryout Strength (Bond Strength controls)

$V_{cp} = k_{cp}\left[\left(\frac{A_{Na}}{A_{Na0}}\right) \psi_{ed,Na}\ \psi_{p,Na}\ N_{a0}\right]$ ACI 318-11 Eq. (D-40)

$\phi\ V_{cp} \geq V_{ua}$ ACI 318-11 Table (D.4.1.1)

A_{Na} see ACI 318-11, Part D.5.5.1, Fig. RD.5.5.1(b)

$A_{Na0} = (2\ c_{Na})^2$ ACI 318-11 Eq. (D-20)

$c_{Na} = 10\ d_a \sqrt{\frac{\tau_{uncr}}{1100}}$ ACI 318-11 Eq. (D-21)

$\psi_{ec,Na} = \left(\frac{1}{1 + \frac{e_N}{c_{Na}}}\right) \leq 1.0$ ACI 318-11 Eq. (D-23)

$\psi_{ed,Na} = 0.7 + 0.3\left(\frac{c_{a,min}}{c_{ac}}\right) \leq 1.0$ ACI 318-11 Eq. (D-25)

$\psi_{cp,Na} = \text{MAX}\left(\frac{c_{a,min}}{c_{ac}}, \frac{c_{Na}}{c_{ac}}\right) \leq 1.0$ ACI 318-11 Eq. (D-27)

$N_{ba} = \lambda_a \cdot \tau_{k,c} \cdot \alpha_{N,seis} \cdot K_{bond} \cdot \pi \cdot d_a \cdot h_{ef}$ ACI 318-11 Eq. (D-22)

Variables

k_{cp}	$\tau_{k,c,uncr}$ [psi]	d_a [in.]	h_{ef} [in.]	$c_{a,min}$ [in.]	$\tau_{k,c}$ [psi]
2	715	0.750	10.000	12.000	345

$e_{c1,N}$ [in.]	$e_{c2,N}$ [in.]	c_{ac} [in.]	K_{bond}	λ_a	$\alpha_{N,seis}$
0.000	0.000	17.469	1.00	1.000	0.650

Calculations

c_{Na} [in.]	A_{Na} [in.^{2}]	A_{Na0} [in.^{2}]	$\psi_{ed,Na}$
6.019	144.93	144.93	1.000

$\psi_{ec1,Na}$	$\psi_{ec2,Na}$	$\psi_{cp,Na}$	N_{ba} [lb]
1.000	1.000	1.000	5284

Results

V_{cp} [lb]	$\phi_{concrete}$	$\phi_{seismic}$	$\phi_{nonductile}$	$\phi\ V_{cp}$ [lb]	V_{ua} [lb]
10568	0.700	1.000	1.000	7397	4250

PROFIS Anchor (c) 2003-2000 Hilti AG, FL-9494 Schaan Hilti is a registered Trademark of Hilti AG, Schaan

4.3 Concrete edge failure in direction y+

$V_{cb} = \left(\frac{A_{Vc}}{A_{Vc0}}\right) \psi_{ed,V}\, \psi_{c,V}\, \psi_{h,V}\, \psi_{parallel,V}\, V_b$ — ACI 318-11 Eq. (D-30)

$\phi\, V_{cb} \geq V_{ua}$ — ACI 318-11 Table D.4.1.1

A_{Vc} see ACI 318-11, Part D.6.2.1, Fig. RD.6.2.1(b)

$A_{Vc0} = 4.5\, c_{a1}^2$ — ACI 318-11 Eq. (D-32)

$\psi_{ec,V} = \left(\frac{1}{1 + \frac{2e_v}{3c_{a1}}}\right) \leq 1.0$ — ACI 318-11 Eq. (D-36)

$\psi_{ed,V} = 0.7 + 0.3\left(\frac{c_{a2}}{1.5c_{a1}}\right) \leq 1.0$ — ACI 318-11 Eq. (D-38)

$\psi_{h,V} = \sqrt{\frac{1.5c_{a1}}{h_a}} \geq 1.0$ — ACI 318-11 Eq. (D-39)

$V_b = 9\, \lambda_a \sqrt{f'_c}\, c_{a1}^{1.5}$ — ACI 318-11 Eq. (D-34)

Variables

c_{a1} [in.]	c_{a2} [in.]	e_{cV} [in.]	$\psi_{c,V}$	h_a [in.]
12.000	12.000	0.000	1.200	14.000

l_e [in.]	λ_a	d_a [in.]	f'_c [psi]	$\psi_{parallel,V}$
6.000	1.000	0.750	4000	1.000

Calculations

A_{Vc} [in.^{2}]	A_{Vc0} [in.^{2}]	$\psi_{ec,V}$	$\psi_{ed,V}$	$\psi_{h,V}$	V_b [lb]
420.00	648.00	1.000	0.900	1.134	23662

Results

V_{cb} [lb]	$\phi_{concrete}$	$\phi_{seismic}$	$\phi_{nonductile}$	$\phi\, V_{cb}$ [lb]	V_{ua} [lb]
18781	0.700	1.000	1.000	13147	4250

5 Warnings

- Load re-distributions on the anchors due to elastic deformations of the anchor plate are not considered. The anchor plate is assumed to be sufficiently stiff, in order not to be deformed when subjected to the loading!
- Condition A applies when supplementary reinforcement is used. The Φ factor is increased for non-steel Design Strengths except Pullout Strength and Pryout strength. Condition B applies when supplementary reinforcement is not used and for Pullout Strength and Pryout Strength. Refer to your local standard.
- Design Strengths of adhesive anchor systems are influenced by the cleaning method. Refer to the INSTRUCTIONS FOR USE given in the Evaluation Service Report for cleaning and installation instructions
- Checking the transfer of loads into the base material and the shear resistance are required in accordance with ACI 318 or the relevant standard!
- An anchor design approach for structures assigned to Seismic Design Category C, D, E or F is given in ACI 318-11 Appendix D, Part D.3.3.4.3 (a) that requires the governing design strength of an anchor or group of anchors be limited by ductile steel failure. If this is NOT the case, the connection design (tension) shall satisfy the provisions of Part D.3.3.4.3 (b), Part D.3.3.4.3 (c), or Part D.3.3.4.3 (d). The connection design (shear) shall satisfy the provisions of Part D.3.3.5.3 (a), Part D.3.3.5.3 (b), or Part D.3.3.5.3 (c).
- Part D.3.3.4.3 (b) / part D.3.3.5.3 (a) requires that the attachment the anchors are connecting to the structure be designed to undergo ductile yielding at a load level corresponding to anchor forces no greater than the controlling design strength. Part D.3.3.4.3 (c) / part D.3.3.5.3 (b) waives the ductility requirements and requires that the anchors shall be designed for the maximum tension / shear that can be transmitted to the anchors by a non-yielding attachment. Part D.3.3.4.3 (d) / part D.3.3.5.3 (c) waives the ductility requirements and requires the design strength of the anchors to equal or exceed the maximum tension / shear obtained from design load combinations that include E, with E increased by Ω_0.
- Installation of Hilti adhesive anchor systems shall be performed by personnel trained to install Hilti adhesive anchors. Reference ACI 318-11, Part D.9.1

Fastening meets the design criteria!

PROFIS Anchor (c) 2003-2009 Hilti AG, FL-9494 Schaan Hilti is a registered Trademark of Hilti AG, Schaan

Company:	ARCADIS	Page:	5
Specifier:	Matt Lotycz	Project:	Topok, CA PG&E - HQ
Address:		Sub-Project I Pos. No.:	HQ Utility Pad
Phone I Fax:	|	Date:	12/22/2014
E-Mail:			

6 Installation data

Anchor plate, steel: -
Profile: S shape (AISC); 3.000 x 2.330 x 0.170 x 0.260 in.
Hole diameter in the fixture: d_f = 0.813 in.
Plate thickness (input): 0.500 in.
Recommended plate thickness: not calculated
Cleaning: Premium cleaning of the drilled hole is required

Anchor type and diameter: HIT-RE 500-SD + HAS B7 3/4
Installation torque: 1200.000 in.lb
Hole diameter in the base material: 0.875 in.
Hole depth in the base material: 10.000 in.
Minimum thickness of the base material: 11.750 in.

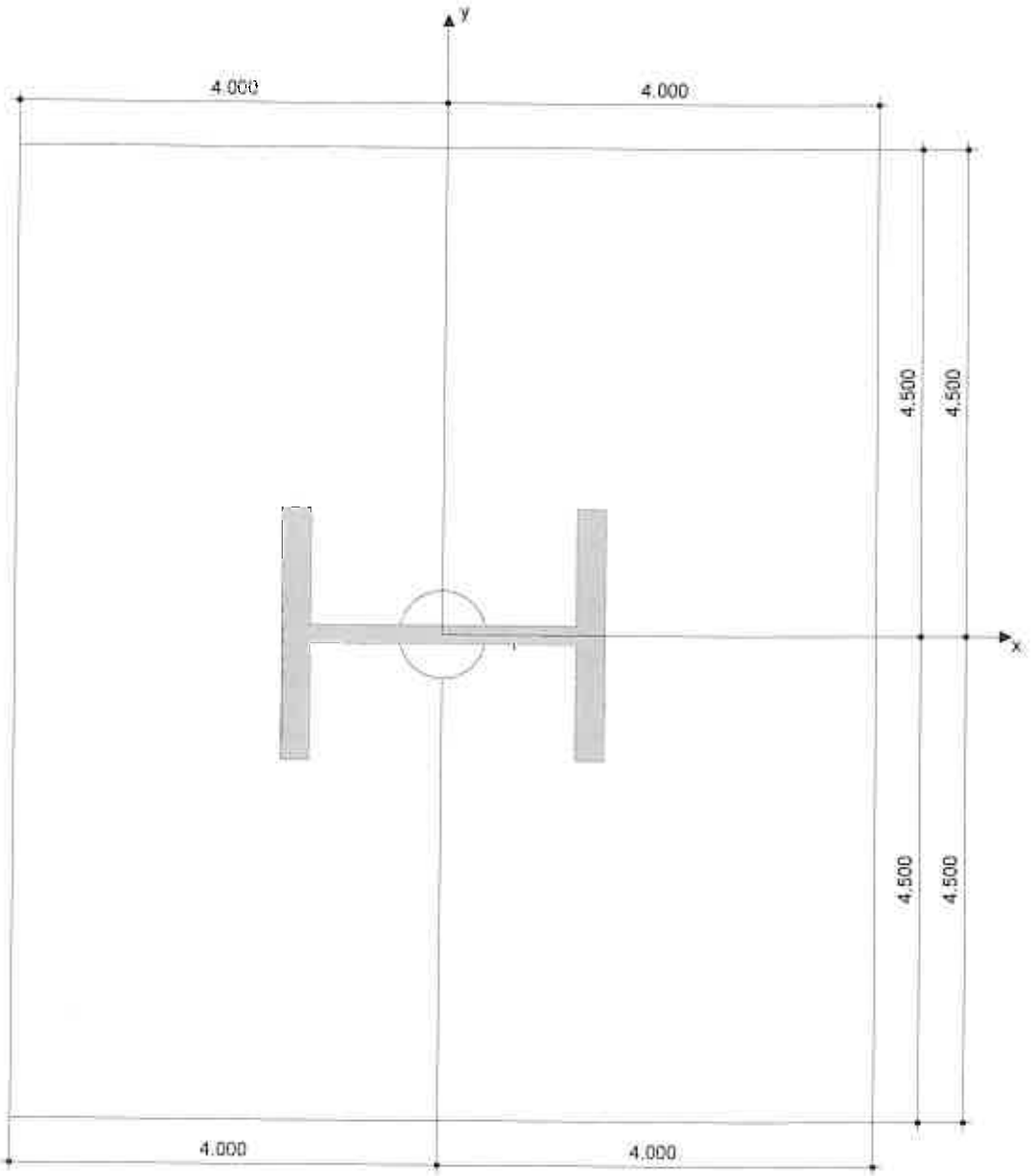

Coordinates Anchor in.

Anchor	x	y	c_{-x}	c_{+x}	c_{-y}	c_{+y}
1	0.000	0.000	12.000	-	-	12.000

PROFIS Anchor (c) 2003-2009 Hilti AG, FL-9494 Schaan Hilti is a registered Trademark of Hilti AG, Schaan

7 Remarks; Your Cooperation Duties

- Any and all information and data contained in the Software concern solely the use of Hilti products and are based on the principles, formulas and security regulations in accordance with Hilti's technical directions and operating, mounting and assembly instructions, etc., that must be strictly complied with by the user. All figures contained therein are average figures, and therefore use-specific tests are to be conducted prior to using the relevant Hilti product. The results of the calculations carried out by means of the Software are based essentially on the data you put in. Therefore, you bear the sole responsibility for the absence of errors, the completeness and the relevance of the data to be put in by you. Moreover, you bear sole responsibility for having the results of the calculation checked and cleared by an expert, particularly with regard to compliance with applicable norms and permits, prior to using them for your specific facility. The Software serves only as an aid to interpret norms and permits without any guarantee as to the absence of errors, the correctness and the relevance of the results or suitability for a specific application.
- You must take all necessary and reasonable steps to prevent or limit damage caused by the Software. In particular, you must arrange for the regular backup of programs and data and, if applicable, carry out the updates of the Software offered by Hilti on a regular basis. If you do not use the AutoUpdate function of the Software, you must ensure that you are using the current and thus up-to-date version of the Software in each case by carrying out manual updates via the Hilti Website. Hilti will not be liable for consequences, such as the recovery of lost or damaged data or programs, arising from a culpable breach of duty by you.

PROFIS Anchor (c) 2003-2009 Hilti AG, FL-9494 Schaan Hilti is a registered Trademark of Hilti AG, Schaan

ARCADIS

SUBJECT: TOPOK — UTILITY PAD

JOB NO:

BY: MSL DATE: 12/23/14

CHKD: DATE:

PAGE H-23

SHEET 1

ELECTRICAL GENERATOR W/ ENCLOSURE & FUEL TANK

- REF SHT H-24 FOR GENERATOR → 4240# (ON 2 STEEL SKID BEAMS @ 48" C/C × 9'-10" LONG × 4'-3 1/8")
- REF SHT H-25 FOR ENCLOSURE → 13'-5" × 4'-4 1/2" → 1290#
  - → FUEL TANK → 13'-5" × 4'-3 1/8" → 2926# (758 GAL)

TOTAL LOAD = 8456# / (4'-3 1/8" × 9'-10")

√OK = 202 psf < 1325 psf NET ALLOWABLE

→ BY INSPECTION, 1'-2" THICK W/ #5 @ 10" C/C EF/EW (3" COVER BOT & 2" COVER TOP) IS SUFFICIENT TO SPAN MINIMAL LOADS B/W 4'-0" C/C STEEL SKID BEAMS

→ ANCHORAGE BY GENERATOR MFG

AGM Form 30 12-01

H-24

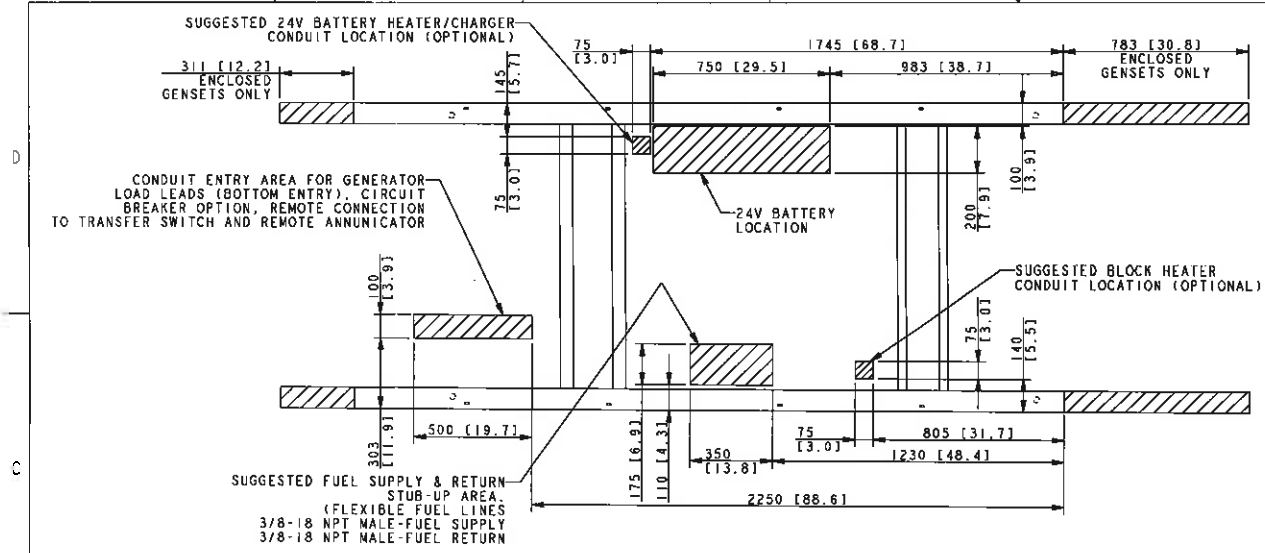

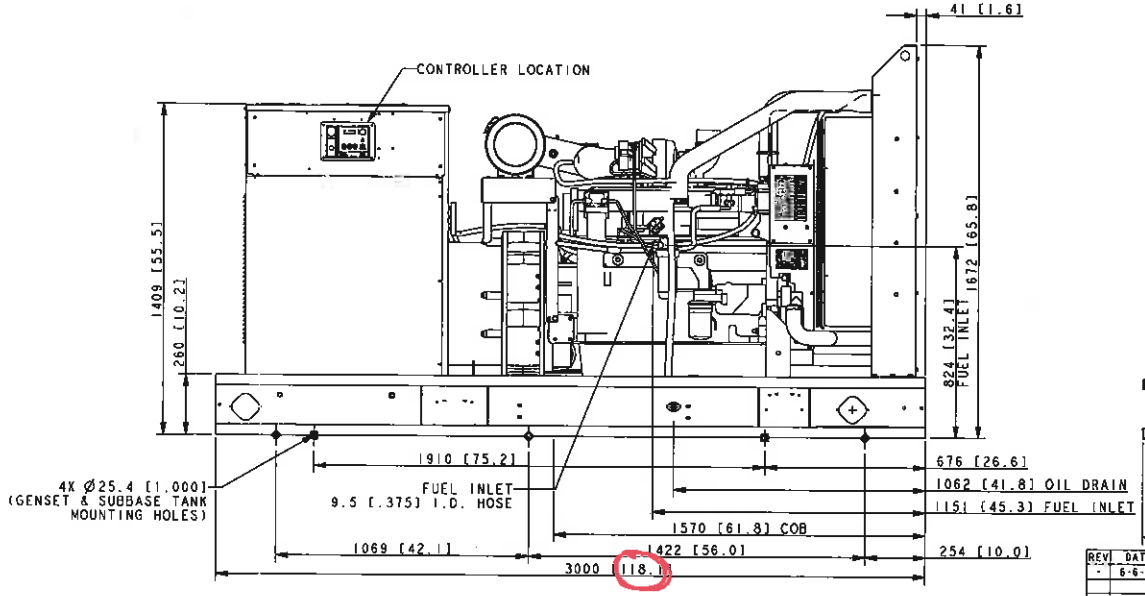

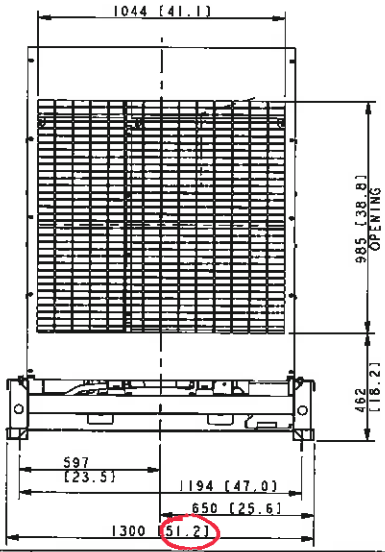

INSTALLATION NOTE
IF SUBBASE FUEL TANK AND/OR SOUND HOUSING IS USED, REFER TO SUBBASE FUEL TANK ADV TO DETERMINE MOUNTING LOCATIONS.

NOTES:
1) WHEN SUBBASE TANK IS USED, CONDUIT MUST BE LOCATED OUTSIDE OF TANK AREA OR IN STUB-UP AREA FOR SUBBASE TANK. REFER TO SUBBASE ADV.
2) DIMENSIONS IN [] ARE ENGLISH EQUIVALENTS.
3) IF AN ENCLOSURE IS USED, THE FUEL LINE MUST BE STUBBED UP FROM DIRECTLY UNDER THE UNIT OR BROUGHT IN FROM THE END OF THE SKID. REFER TO ENCLOSURE ADV.
4) MAXIMUM WET WEIGHT OF GENSET: 1923 KG [4240 LBS]
5) IF IBC CERTIFICATION IS REQUIRED SEE SEISMIC ADV FOR INSTALLATION INSTRUCTIONS.

■ 4X25.4 [1.0] STANDARD MOUNTING
◆ 6X22.2 [0.88] IBC MOUNTING

200 MODEL 4UA9, 4UA13 RECONNECTABLE IMPROVED MOTOR STARTING (IMS) RECONNECTABLE AND 600V ALTERNATORS JOHN DEERE 6068HF TIER III

REV	DATE	ON COMPOSITE DWGS, SEE PART NO. FOR REVISION LEVEL	BY
-	6-6-11	NEW DRAWING (91637-3)	PLD

UNLESS OTHERWISE SPECIFIED: 1) DIMENSIONS ARE IN MILLIMETERS 2) TOLERANCES ARE: .X ±X .XX ±X .XXX ±X ANGLES ± SURFACE FINISH MAX. THIRD ANGLE PROJECTION

APPROVALS		DATE
DRAWN	PLD	6-6-11
CHECKED	PLD	6-6-11
APPROVED	GDF	6-6-11

KOHLER CO. POWER SYSTEMS, KOHLER, WI 53044 U.S.A. METRIC PRO-E

THIS DRAWING IN DESIGN AND DETAIL IS KOHLER CO. PROPERTY AND MUST NOT BE USED EXCEPT IN CONNECTION WITH KOHLER CO. WORK. ALL RIGHTS OF DESIGN OR INVENTION ARE RESERVED.

TITLE: DIMENSION PRINT, 200 MODEL

SCALE 0.10 | CAD NO. | SHEET 1 of 2

DWG NO. ADV-8185 | D

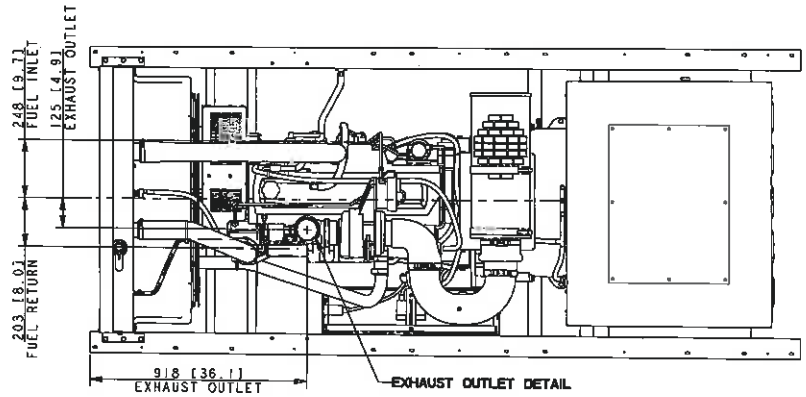

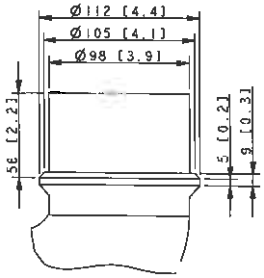

EXHAUST OUTLET DETAIL
SCALE 0.60

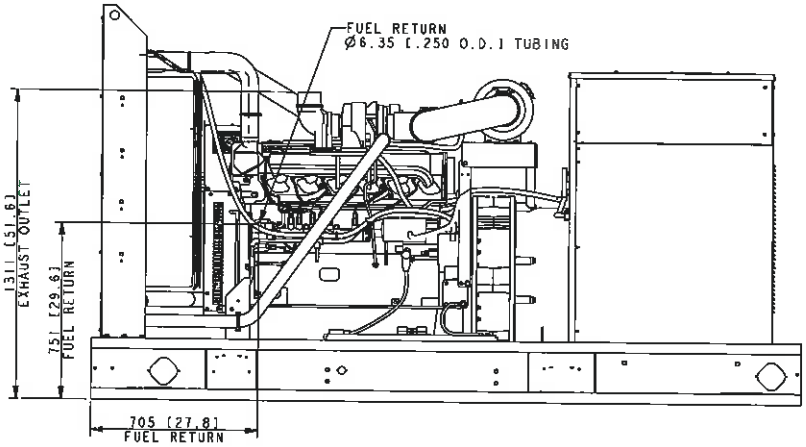

200 MODEL 4UA9, 4UA13 RECONNECTABLE
IMPROVED MOTOR STARTING (IMS) RECONNECTABLE
AND 600V ALTERNATORS
JOHN DEERE 6068HF TIER III

REV	DATE	ON COMPOSITE DWGS, SEE PART NO. FOR REVISION LEVEL	BY
-	6-6-11	NEW DRAWING [91637-3]	PLD

UNLESS OTHERWISE SPECIFIED - [1] DIMENSIONS ARE IN MILLIMETERS [2] TOLERANCES ARE:
X.XX ±
X.X ±
X ±
ANGLES ±
SURFACE FINISH
MAX.
THIRD ANGLE PROJECTION

APPROVALS		DATE
DRAWN	PLD	6-6-11
CHECKED	PLD	6-6-11
APPROVED	GDF	6-6-11

KOHLER CO. METRIC | PRO-E
POWER SYSTEMS, KOHLER, WI 53044 U.S.A.

THIS DRAWING IN DESIGN AND DETAIL IS KOHLER CO. PROPERTY AND MUST NOT BE USED EXCEPT IN CONNECTION WITH KOHLER CO. WORK. ALL RIGHTS OF DESIGN OR INVENTION ARE RESERVED.

TITLE: DIMENSION PRINT, 200 MODEL
SCALE 0.10 | CAD NO. | SHEET 2 of 2
DWG NO. ADV-8185 | D

Model: 200REOZJF

KOHLER. Power Systems

208-600 V **Diesel**

ISO 9001 KOHLER POWER SYSTEMS

Tier 3 EPA-Certified for Stationary Emergency Applications

Ratings Range

		60 Hz
Standby:	**kW**	168-200
	kVA	210-250
Prime:	**kW**	158-180
	kVA	198-225

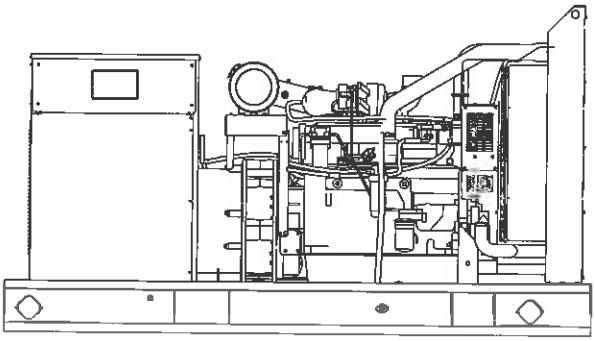

Generator Set Ratings

Alternator	Voltage	Ph	Hz	130°C Rise Standby Rating kW/kVA	Amps	105°C Rise Prime Rating kW/kVA	Amps
4S13X	120/208	3	60	184/230	639	173/216	600
	127/220	3	60	194/243	636	180/225	590
	120/240	3	60	184/230	553	173/216	520
	139/240	3	60	200/250	601	180/225	541
	220/380	3	60	168/210	319	158/198	300
	277/480	3	60	200/250	301	180/225	271
4UA9	120/208	3	60	200/250	694	180/225	625
	127/220	3	60	200/250	656	180/225	590
	120/240	3	60	200/250	601	180/225	541
	139/240	3	60	200/250	601	180/225	541
	220/380	3	60	200/250	380	180/225	342
	277/480	3	60	200/250	301	180/225	271
	347/600	3	60	200/250	241	180/225	217
4UA13	120/208	3	60	200/250	694	180/225	625
	127/220	3	60	200/250	656	180/225	590
	120/240	3	60	200/250	601	180/225	541
	139/240	3	60	200/250	601	180/225	541
	220/380	3	60	200/250	380	180/225	342
	277/480	3	60	200/250	301	180/225	271
	347/600	3	60	200/250	241	180/225	217

RATINGS: All three-phase units are rated at 0.8 power factor. All single-phase units are rated at 1.0 power factor. *Standby Ratings:* The standby rating is applicable to varying loads for the duration of a power outage. There is no overload capability for this rating. *Prime Power Ratings:* At varying load, the number of generator set operating hours is unlimited. A 10% overload capacity is available for one hour in twelve. Ratings are in accordance with ISO-8528-1 and ISO-3046-1. For limited running time and continuous ratings, consult the factory. Obtain technical information bulletin (TIB-101) for ratings guidelines, complete ratings definitions, and site condition derates. The generator set manufacturer reserves the right to change the design or specifications without notice and without any obligation or liability whatsoever.

Standard Features

- Kohler Co. provides one-source responsibility for the generating system and accessories.
- The generator set and its components are prototype-tested, factory-built, and production-tested.
- The 60 Hz generator set offers a UL 2200 listing.
- The generator set accepts rated load in one step.
- The 60 Hz generator set meets NFPA 110, Level 1, when equipped with the necessary accessories and installed per NFPA standards.
- A one-year limited warranty covers all systems and components. Two- and five-year extended warranties are also available.
- Alternator features:
  - The unique Fast-Response™ X excitation system delivers excellent voltage response and short-circuit capability using a rare-earth, permanent magnet (PM)-excited alternator. (4S13X alternator)
  - The unique Fast-Response™ II excitation system delivers excellent voltage response and short-circuit capability using a permanent magnet (PM)-excited alternator. (4UA9 and 4UA13 alternators)
  - The brushless, rotating-field alternator has broadrange reconnectability.
- Other features:
  - Kohler designed controllers for guaranteed system integration and remote communication. See Controllers on page 3.
  - The low coolant level shutdown prevents overheating (standard on radiator models only).
  - Integral vibration isolation eliminates the need for under-unit vibration spring isolators.
  - Multiple circuit breaker configurations.

Alternator Specifications

Specifications	Alternator
Manufacturer	Kohler
Type	4-Pole, Rotating-Field
Exciter type	Brushless, Permanent-Magnet
Leads: quantity, type	
4SX, 4UA	12, Reconnectable
Voltage regulator	Solid State, Volts/Hz
Insulation:	NEMA MG1
Material	Class H
Temperature rise	130°C, Standby
Bearing: quantity, type	1, Sealed
Coupling	Flexible Disc
Amortisseur windings	Full
Voltage regulation, no-load to full-load	Controller Dependent
One-step load acceptance	100% of Rating
Unbalanced load capability	100% of Rated Standby Current

- NEMA MG1, IEEE, and ANSI standards compliance for temperature rise and motor starting.
- Sustained short-circuit current of up to 300% of the rated current for up to 10 seconds.
- Sustained short-circuit current enabling downstream circuit breakers to trip without collapsing the alternator field.
- Self-ventilated and dripproof construction.
- Vacuum-impregnated windings with fungus-resistant epoxy varnish for dependability and long life.
- Superior voltage waveform from a two-thirds pitch stator and skewed rotor.

Specifications		Alternator
Peak motor starting kVA:		(35% dip for voltages below)
480 V	4S13X (12 lead)	570
480 V	4UA9 (12 lead)	700
480 V	4UA13 (12 lead)	960

Application Data

Engine

Engine Specifications	
Manufacturer	John Deere
Engine model	6068HFG85
Engine type	4-Cycle, Turbocharged, Charge Air-Cooled
Cylinder arrangement	6 Inline
Displacement, L (cu. in.)	6.8 (415)
Bore and stroke, mm (in.)	106 x 127 (4.19 x 5.00)
Compression ratio	17.0:1
Piston speed, m/min. (ft./min.)	457 (1500)
Main bearings: quantity, type	7, Replaceable Insert
Rated rpm	1800
Max. power at rated rpm, kWm (BHP)	235 (315)
Cylinder head material	Cast Iron
Crankshaft material	Forged Steel
Valve material:	
Intake	Chromium-Silicon Steel
Exhaust	Stainless Steel
Governor: type, make/model	JDEC Electronic L14 Denso HP3
Frequency regulation, no-load to full-load	Isochronous
Frequency regulation, steady state	±0.25%
Frequency	Fixed
Air cleaner type, all models	Dry

Exhaust

Exhaust System	
Exhaust manifold type	Dry
Exhaust flow at rated kW, m^3/min. (cfm)	42.8 (1510)
Exhaust temperature at rated kW, dry exhaust, °C (°F)	527 (980)
Maximum allowable back pressure, kPa (in. Hg)	Min. 4 (1.2) Max. 10 (3.0)
Exhaust outlet size at engine hookup, mm (in.)	98 (3.86)

Engine Electrical

Engine Electrical System	
Battery charging alternator:	24 Volt
Ground (negative/positive)	Negative
Volts (DC)	24
Ampere rating	45
Starter motor rated voltage (DC)	24
Battery, recommended cold cranking amps (CCA):	
Quantity, CCA rating each	Two, 950
Battery voltage (DC)	12

Fuel

Fuel System	
Fuel supply line, min. ID, mm (in.)	11.0 (0.44)
Fuel return line, min. ID, mm (in.)	6.0 (0.25)
Max. lift, fuel pump: type, m (ft.)	Mechanical, 1.8 (6.0)
Max. fuel flow, Lph (gph)	92.7 (24.5)
Max. return line restriction, kPa (in. Hg)	20 (5.9)
Fuel prime pump	Manual
Fuel filter	
Primary	30 Microns
Secondary	2 Microns @ 98% Efficiency
Water Separator	Yes
Recommended fuel	#2 Diesel

Lubrication

Lubricating System	
Type	Full Pressure
Oil pan capacity, L (qt.)	32.5 (34.4)
Oil pan capacity with filter, L (qt.)	33.4 (35.3)
Oil filter: quantity, type	1, Cartridge
Oil cooler	Water-Cooled

Application Data

Cooling

Radiator System	
Ambient temperature, °C (°F) *	50 (122)
Engine jacket water capacity, L (gal.)	11.3 (3.0)
Radiator system capacity, including engine, L (gal.)	27.6 (7.3)
Engine jacket water flow, Lpm (gpm)	230.9 (61)
Heat rejected to cooling water at rated kW, dry exhaust, kW (Btu/min.)	94.2 (5360)
Heat rejected to air charge cooler at rated kW, dry exhaust, kW (Btu/min.)	56.1 (3190)
Water pump type	Centrifugal
Fan diameter, including blades, mm (in.)	787 (31)
Fan, kWm (HP)	8.6 (11.5)
Max. restriction of cooling air, intake and discharge side of radiator, kPa (in. H_2O)	0.125 (0.5)

* Enclosure with enclosed silencer reduces ambient temperature capability by 5°C (9°F).

Operation Requirements

Air Requirements	
Radiator-cooled cooling air, m^3/min. (scfm)‡	368.1 (13000)
Combustion air, m^3/min. (cfm)	17.6 (620)
Heat rejected to ambient air:	
Engine, kW (Btu/min.)	46.9 (2670)
Alternator, kW (Btu/min.)	18.5 (1050)

‡ Air density = 1.20 kg/m^3 (0.075 lbm/ft^3)

Fuel Consumption		
Diesel, Lph (gph) at % load	**Standby Rating**	
100%	58.0	(15.3)
75%	43.3	(11.4)
50%	31.4	(8.3)
25%	19.7	(5.2)
Diesel, Lph (gph) at % load	**Prime Rating**	
100%	50.1	(13.2)
75%	36.1	(9.5)
50%	25.7	(6.8)
25%	16.6	(4.4)

Controllers

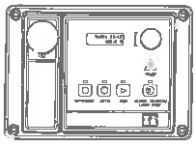

Decision-Maker® 3000 Controller
Provides advanced control, system monitoring, and system diagnostics for optimum performance and compatibility.
- Digital display and menu control provide easy local data access
- Measurements are selectable in metric or English units
- Remote communication thru a PC via network or serial configuration
- Controller supports Modbus® protocol
- Integrated hybrid voltage regulator with ±0.5% regulation
- Built-in alternator thermal overload protection
- NFPA 110 Level 1 capability

Refer to G6-100 for additional controller features and accessories.

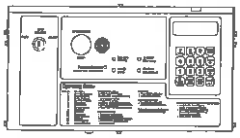

Decision-Maker® 550 Controller
Provides advanced control, system monitoring, and system diagnostics with remote monitoring capabilities.
- Digital display and keypad provide easy local data access
- Measurements are selectable in metric or English units
- Remote communication thru a PC via network or modem configuration
- Controller supports Modbus® protocol
- Integrated voltage regulator with ±0.25% regulation
- Built-in alternator thermal overload protection
- NFPA 110 Level 1 capability

Refer to G6-46 for additional controller features and accessories.

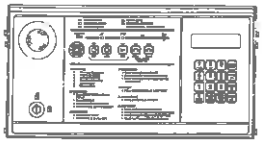

Decision-Maker® 6000 Paralleling Controller
Provides advanced control, system monitoring, and system diagnostics with remote monitoring capabilities for paralleling multiple generator sets.
- Paralleling capability with first-on logic, synchronizer, kW and kVAR load sharing, and protective relays
- Digital display and keypad provide easy local data access
- Measurements are selectable in metric or English units
- Remote communication thru a PC via network or modem configuration
- Controller supports Modbus® protocol
- Integrated voltage regulator with ±0.25% regulation
- Built-in alternator thermal overload protection
- NFPA 110 Level 1 capability

Refer to G6-107 for additional controller features and accessories.

KOHLER CO., Kohler, Wisconsin 53044 USA
Phone 920-457-4441, Fax 920-459-1646
For the nearest sales and service outlet in the
US and Canada, phone 1-800-544-2444
KOHLERPower.com

Kohler Power Systems
Asia Pacific Headquarters
7 Jurong Pier Road
Singapore 619159
Phone (65) 6264-6422, Fax (65) 6264-6455

Standard Features

- Alternator Protection
- Battery Rack and Cables
- Customer Connection
  (standard with Decision-Maker® 6000 controller only)
- Local Emergency Stop Switch
- Oil Drain Extension
- Operation and Installation Literature

Available Options

Approvals and Listings

- ☐ California OSHPD Approval
- ☐ CSA Approval
- ☐ IBC Seismic Certification
- ☐ UL 2200 Listing

Enclosed Unit

- ☐ Sound Enclosure (with enclosed critical silencer)
- ☐ Weather Enclosure (with enclosed critical silencer)

Open Unit

- ☐ Exhaust Silencer, Critical (kit: PA-354809)
- ☐ Flexible Exhaust Connector, Stainless Steel

Fuel System

- ☐ Flexible Fuel Lines
- ☐ Fuel Pressure Gauge
- ☐ Subbase Fuel Tanks

Controller

- ☐ Common Failure Relay
- ☐ Communication Products and PC Software
- ☐ Customer Connection (Decision-Maker® 550 controller only)
- ☐ Decision-Maker® Paralleling System (DPS)
  (Decision-Maker® 6000 controller only)
- ☐ Dry Contact (isolated alarm)
  (Decision-Maker® 550 and 6000 controllers only)
- ☐ Input/Output Module (Decision-Maker® 3000 controller only)
- ☐ Remote Emergency Stop Switch
- ☐ Remote Serial Annunciator Panel
- ☐ Run Relay

Cooling System

- ☐ Block Heater, 1800 W, 90–120 V, 1 Ph
- ☐ Block Heater, 2000 W, 190–240 V, 1 Ph
  Recommended for ambient temperatures below 0°C (32°F)
- ☐ Radiator Duct Flange

Electrical System

- ☐ Alternator Strip Heater
- ☐ Battery
- ☐ Battery Charger, Equalize/Float Type
- ☐ Battery Heater
- ☐ Line Circuit Breaker (NEMA type 1 enclosure)
- ☐ Line Circuit Breaker with Shunt Trip (NEMA type 1 enclosure)

Paralleling System

- ☐ Manual Speed Adjust

Miscellaneous

- ☐ Air Cleaner, Heavy Duty
- ☐ Air Cleaner Restriction Indicator
- ☐ Certified Test Report
- ☐ Crankcase Emissions Canister
- ☐ Engine Fluids Added
- ☐ Rated Power Factor Testing
- ☐ Rodent Guards

Literature

- ☐ General Maintenance
- ☐ NFPA 110
- ☐ Overhaul
- ☐ Production

Warranty

- ☐ 2-Year Basic
- ☐ 5-Year Basic
- ☐ 5-Year Comprehensive

Other Options

- ☐ _____
- ☐ _____
- ☐ _____
- ☐ _____
- ☐ _____

Dimensions and Weights

Overall Size, L x W x H, mm (in.):	3000 x 1300 x 1672 (118.1 x 51.2 x 65.8)
Weight (radiator model), wet, kg (lb.):	1923 (4240)

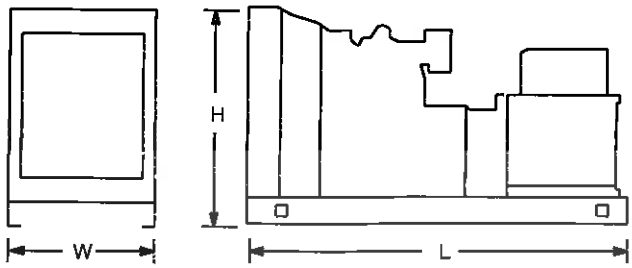

NOTE: This drawing is provided for reference only and should not be used for planning installation. Contact your local distributor for more detailed information.

DISTRIBUTED BY:

© 2011, 2012, 2013 by Kohler Co. All rights reserved.

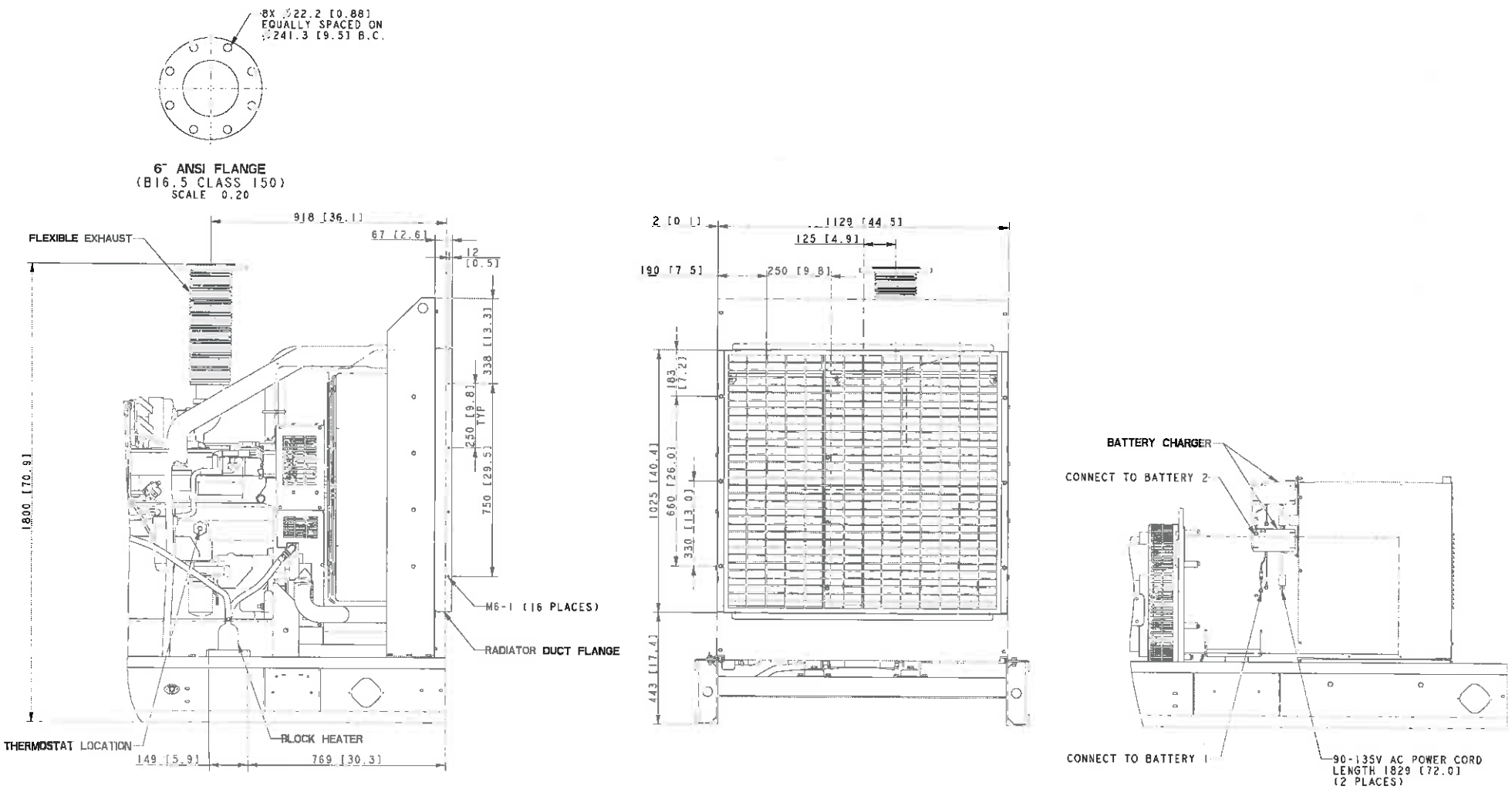

NOTE: DIMENSIONS IN [ ] ARE ENGLISH EQUIVALENTS

REV	DATE	ON COMPOSITE DWGS, SEE PART NO. FOR REVISION LEVEL	BY
-	12-4-09	NEW DRAWING (68251-4)	DJV

180 MODEL 4S15
200 MODEL 4UA9 & 4UA13
RECONNECTABLE
IMPROVED MOTOR STARTING (IMS) RECONN., & 600V ALTERNATORS
JOHN DEERE 6068HF TIER III

UNLESS OTHERWISE SPECIFIED - ALL DIMENSIONS ARE IN MILLIMETERS
TOLERANCES ARE:
X.XX ± 0.25
X.X ± 1.0
X ± 1.5
ANGLES ± 0° 30'
SURFACE FINISH 125 MAX.
THIRD ANGLE PROJECTION

APPROVALS		DATE
DRAWN	DJV	12-4-09
CHECKED	CWF	12-4-09
APPROVED	JDZ	12-4-09

KOHLER CO. | METRIC | PRO-E
POWER SYSTEMS. KOHLER, WI 53044 U.S.A.

THIS DRAWING IN DESIGN AND DETAIL IS KOHLER CO. PROPERTY AND MUST NOT BE USED EXCEPT IN CONNECTION WITH KOHLER CO. WORK. ALL RIGHTS OF DESIGN OR INVENTION ARE RESERVED.

TITLE: DIMENSION PRINT, ACCESSORY, 180-200 JD

SCALE 0.14 | SHEET 1 of 1

DWG NO. ADV-7853 | D

H-25

Lotycz, Matt

From: O'Brien, Maureen
Sent: Wednesday, December 10, 2014 5:26 PM
To: Lotycz, Matt; Baxter, Jonathan
Cc: Sidoti, John; Eckel, Caroline H.
Subject: RE: Utility Pad DWG File
Attachments: Generator housing drawing adv7854.pdf; Generator tank drawing adv7859.pdf; Generator enclosure and tank g6099.pdf

Forgot to include the enclosure/sub base fuel tank cut sheets for the generator. I will make sure Andy updates to these dimensions.

Sorry about that!

From: Lotycz, Matt
Sent: Wednesday, December 10, 2014 3:48 PM
To: O'Brien, Maureen; Baxter, Jonathan
Cc: Sidoti, John; Eckel, Caroline H.
Subject: RE: Utility Pad DWG File

Maureen and Jon – Couple of questions:

1. Just wanted to confirm if you are ok with the Power Distribution Panel and Telecom Panel sitting at the very edge of the Pad? I wasn't sure if you wanted 3'-0" of distance around (to the top side of those panels) those panels for "ease of maintenance (see attached screen image below).
2. Are all the tanks, pumps, transformer and generator all shown to scale per cutsheets?

Maureen and/or Carol - Can you get me a cutsheet on the 15,000 Fire Water Tank and Bladder tank by tomorrow morning. Need plan view size, section view, seismic anchorage and hold-downs and total weight. The only tank info I have received to date is the 5000 gal tanks from Caroline. Thanks.

John S - Can you get me a cutsheet on the transformer and generator by tomorrow morning. Need plan view size and weight.

Let me know as I will be getting started on this tomorrow. Thanks.

Matt

MODEL	ENCLOSURE WEIGHT KG [LBS]
STEEL WEATHER	494 [1090]
STEEL SOUND	585 [1290]
ALUMINUM SOUND	300 [660]

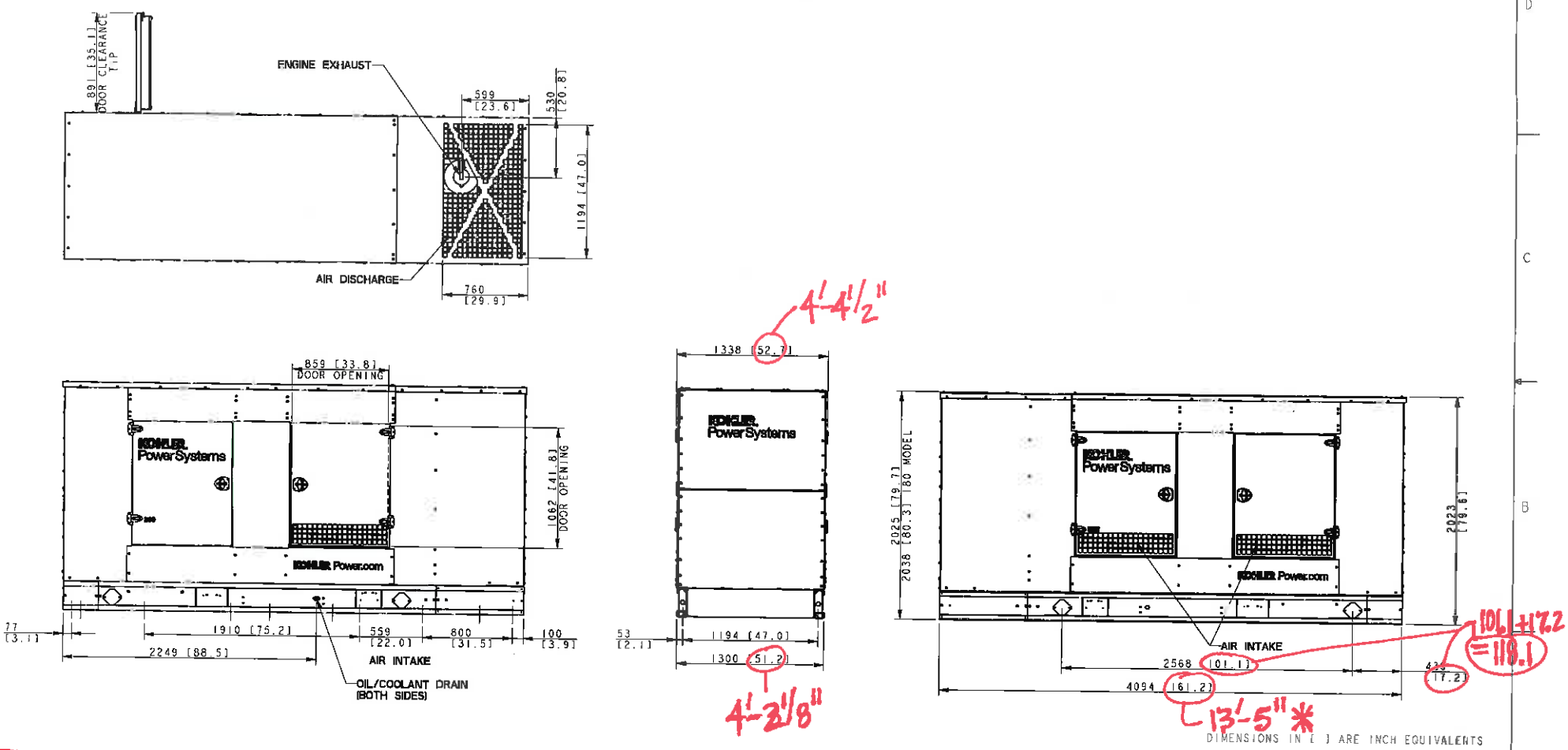

DIMENSIONS IN [ ] ARE INCH EQUIVALENTS

NOTE:
ENCLOSURE ONLY MOUNTS TO SKID

FOR SIDE-UP ACCESS DURING INSTALLATION THE REAR ENCLOSURE PANEL SHOULD BE REMOVED

180 MODEL 4S15, 4S12X, 4S13X
200 MODEL 4UA9, 4UA13, 4S13X
RECONNECTABLE
IMPROVE MOTOR STARTING (IMS) RECONNECTABLE
& 600V ALTERNATORS
6068HF435 JOHN DEERE TIER III

REV	DATE	ON COMPOSITE DWGS, SEE PART NO. FOR REVISION LEVEL	BY
G	10-31-12	SHEET 2 WAS SHEET, ADDED SHEET 1 [CT28612]	CEK
H	2-5-13	(A-1) 1-3 WAS 1-2, SEE SHEET 3 [CT32174]	SAM

UNLESS OTHERWISE SPECIFIED - TI DIMENSIONS ARE IN MILLIMETERS ZI TOLERANCES ARE:
X.XX ± 0.25
X.X ± 0.1
X ± 1
ANGLES ± 0° 30'
SURFACE FINISH 125 MAX
THIRD ANGLE PROJECTION

APPROVALS		DATE
DRAWN	DJV	2-11-10
CHECKED	CWF	2-11-10
APPROVED	RJD	2-11-10

KOHLER CO. METRIC PRO-E
POWER SYSTEMS, KOHLER, WI 53044 U.S.A.

THIS DRAWING IN DESIGN AND DETAIL IS KOHLER CO PROPERTY AND MUST NOT BE USED EXCEPT IN CONNECTION WITH KOHLER CO. WORK. ALL RIGHTS OF DESIGN OR INVENTION ARE RESERVED.

TITLE
DIMENSION PRINT, ENCLOSURE 180-200 JD

SCALE 0.06 | TAB NO | SHEET 1 of 3
DWG NO ADV-7854 | D

MODEL	ENCLOSURE WEIGHT KG [LBS]
STEEL WEATHER	494 [1090]
STEEL SOUND	585 [1290]
ALUMINUM SOUND	300 [660]

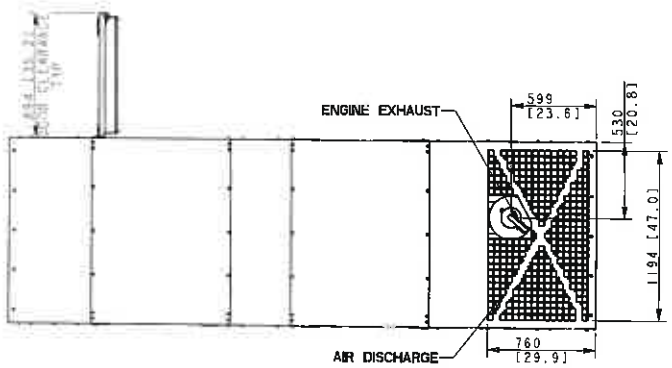

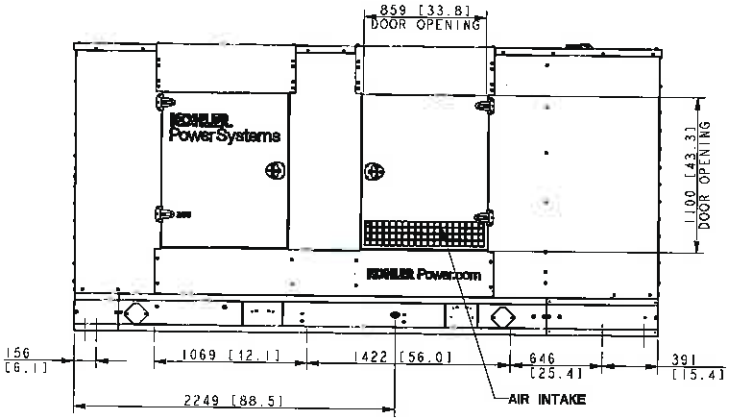

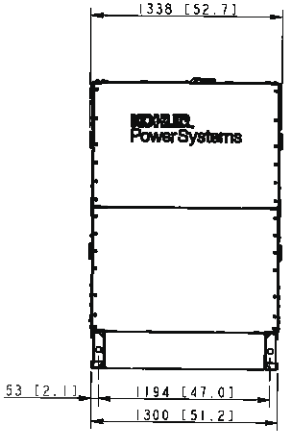

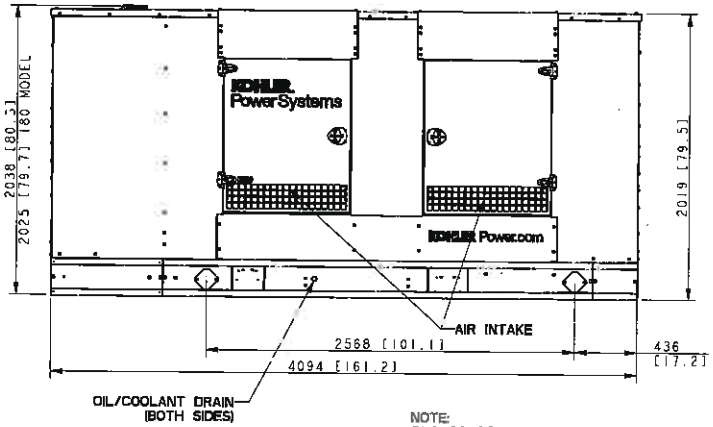

NOTE:
ENCLOSURE ONLY MOUNTS TO SKID.

FOR STUB-UP ACCESS DURING INSTALLATION THE REAR ENCLOSURE PANEL SHOULD BE REMOVED

DIMENSIONS IN [ ] ARE INCH EQUIVALENTS

IBC/OSHPD ENCLOSURE

180 MODEL 4S15, 4S12X, 4S13Y
200 MODEL 4UA9, 4UA13, 4S13X
RECONNECTABLE
IMPROVE MOTOR STARTING (IMS) RECONNECTABLE
& 600V ALTERNATORS
6068HF485 JOHN DEERE TIER III

REV	DATE	ON COMPOSITE DWGS, SEE PART NO. FOR REVISION LEVEL	BY
C	6-20-11	(A-1) STUB-UP NOTE ADDED [91752]	SJM
D	12-15-11	(C-2) 494 [1090] WAS 363 [800], 585 [1290] WAS 386 [850] AND 300 [660] WAS 238 [525] [92432]	GFR
E	2-7-12	(A-4) 180 & 200 MODEL NOTE UPDATED [92681]	PKD
F	9-18-12	(B-4) 2065 WAS 2128 [CT24079]	SAM
G	10-31-12	SHEET 2 WAS SHEET 1, ADDED SHEET 1 [CT28612]	CEK
H	2-5-13	(A-1) 2-3 WAS 2-2, SEE SHEET 3 [CT32174]	SAM

UNLESS OTHERWISE SPECIFIED - DIMENSIONS ARE IN MILLIMETERS TOLERANCES ARE:
X.XX ± 0.25
X.X ± 0.5
X ± 1.5
ANGLES ± 0° 30' MAX
SURFACE FINISH
THIRD ANGLE PROJECTION

APPROVALS		DATE
DRAWN	DJV	2-11-10
ENG REQ	CWF	2-11-10
APPROVED	RJD	2-11-10

KOHLER CO. METRIC | PRO-E
POWER SYSTEMS, KOHLER, WI 53044 U.S.A.
THIS DRAWING IN DESIGN AND DETAIL IS KOHLER CO. PROPERTY AND MUST NOT BE USED EXCEPT IN CONNECTION WITH KOHLER CO. WORK. ALL RIGHTS OF DESIGN OR INVENTION ARE RESERVED.
TITLE
DIMENSION PRINT, ENCLOSURE 180-200 JD
SCALE 0.06 | SHEET 2 of 3
DWG NO ADV-7854 | D

MODEL	ENCLOSURE WEIGHT KG [LBS]
STEEL WEATHER	448 [990]
STEEL SOUND	539 [1190]
ALUMINUM SOUND	254 [560]

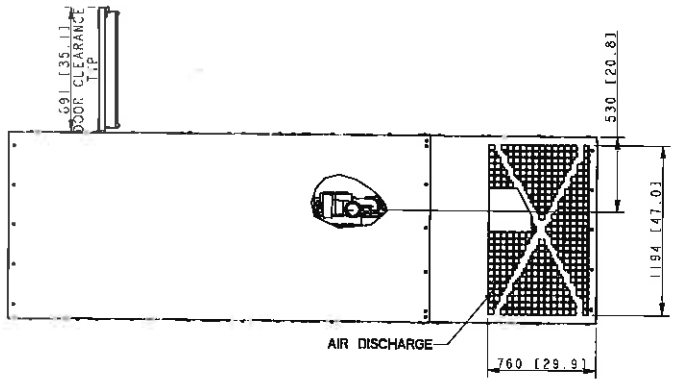

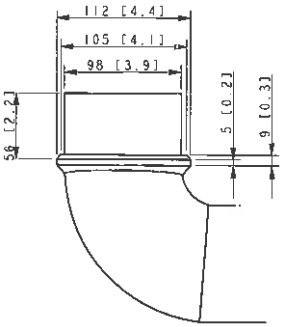

EXHAUST OUTLET
SCALE 0.500

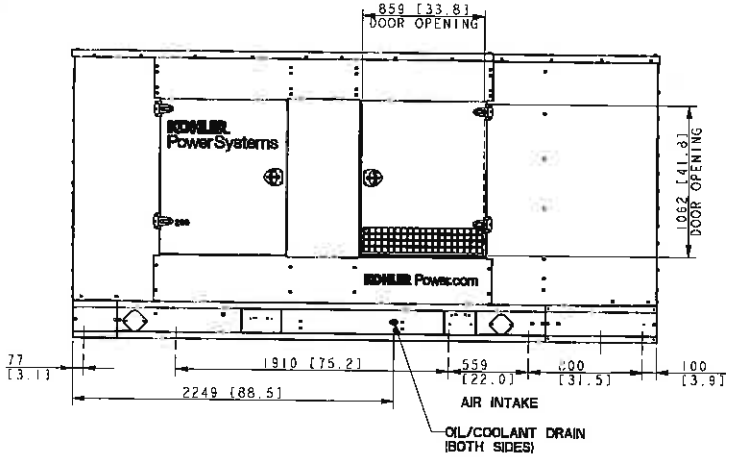

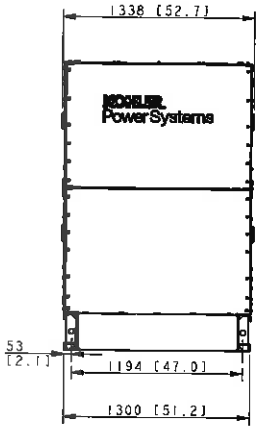

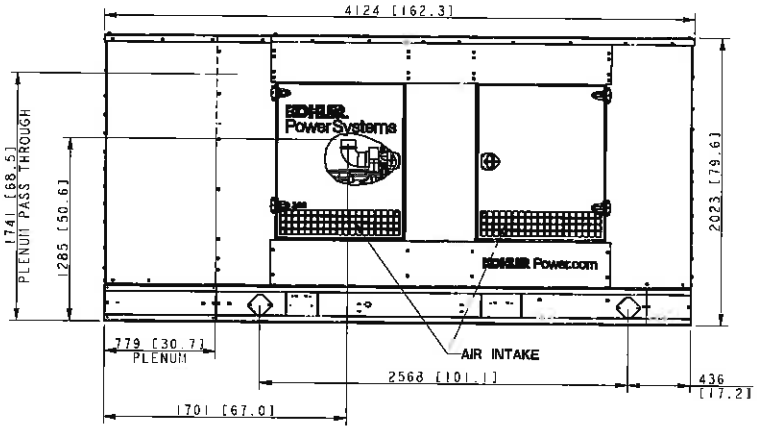

CA AQMD READY ENCLOSURES (NO SILENCER)

DIMENSIONS IN [ ] ARE INCH EQUIVALENTS

NOTE:
ENCLOSURE ONLY MOUNTS TO SKID

FOR STUB-UP ACCESS DURING INSTALLATION THE REAR ENCLOSURE PANEL SHOULD BE REMOVED.

180 MODEL 4S15, 4S12X, 4S13X
200 MODEL 4UA9, 4UA13, 4S13X
RECONNECTABLE
IMPROVE MOTOR STARTING (IMS) RECONNECTABLE
& 600V ALTERNATORS
6068HF485 JOHN DEERE TIER III

REV	DATE	ON COMPOSITE DWGS, SEE PART NO. FOR REVISION LEVEL	BY
N	2-5-13	SHEET 3 AND AQMA MODEL ADDED [CT32174]	SAM

UNLESS OTHERWISE SPECIFIED - IN DIMENSIONS ARE IN MILLIMETERS [IN] TOLERANCES ARE:
X.XX ± 0.25
X.X ± 1.0
X ± 1.5
ANGLES ± 0° 30'
SURFACE FINISH 125 MAX
THIRD ANGLE PROJECTION

APPROVALS		DATE
DRAWN	SAM	2-5-13
CHECKED	KEM	2-5-13
APPROVED	KEM	2-5-13

KOHLER CO. METRIC PRO-E
POWER SYSTEMS, KOHLER, WI 53044 U.S.A.
THIS DRAWING IN DESIGN AND DETAIL IS KOHLER CO. PROPERTY AND MUST NOT BE USED EXCEPT IN CONNECTION WITH KOHLER CO. WORK. ALL RIGHTS OF DESIGN OR INVENTION ARE RESERVED.

TITLE DIMENSION PRINT, ENCLOSURE 180-200 JD
SCALE 0.06 FINISH SHEET 3 of 3
DWG NO ADV-7854 D

MODEL	CAPACITY		WEIGHT		HEIGHT		E-Vent	
	LITERS	GAL	KG	LBS	MM	IN	SIZE (IN)	QTY
180/200kW	1514	400	933	2057	482.6	19.0	4.0	2.0
180/200kW	2871	758	1327	2925	889.0	35.0	5.0	2.0

TANK FITTINGS:

A. 'A' NPT EMERGENCY VENT FITTING PER NFPA 30 WITH VENT CAPS
B. 2" NPT FUEL FILL FITTING WITH LOCKABLE CAP
C. 2" NPT FUEL LEVEL GAUGE FITTING
D. 2" NORMAL VENT FITTING WITH MUSHROOM VENT CAP AND 5" RISER
E. 2" NPT FITTING FOR REMOVABLE ENGINE SUPPLY DIP TUBE (3/8" NPT FEMALE WITH CHECK VALVE)
F. 2" NPT FITTING FOR REMOVABLE FUEL RETURN DIP TUBE (3/8" NPT FEMALE)
H. 2" NPT FOR LOW LEVEL SWITCH (SET AT 50% FULL, SILICONE PACKED)
J. 2" NPT ADDITIONAL FITTING FOR OPTIONAL ACCESSORY (INSTALL STEEL 2" NPT PIPE PLUG)
M. 1/2" NPT BASIN DRAIN (INSTALL STEEL 1/2" NPT PIPE PLUG)
N. 1/2" NPT FOR FUEL IN BASIN SWITCH (INSTALL STEEL 1/2" NPT PIPE PLUG)

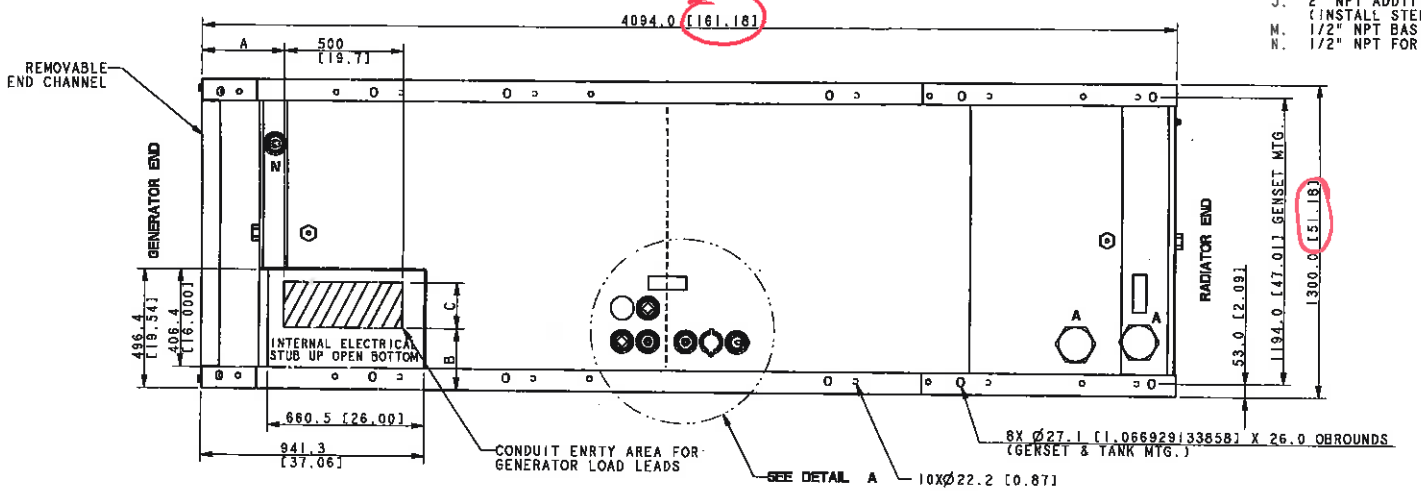

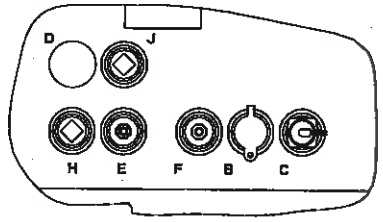

DETAIL A
SCALE 0.200

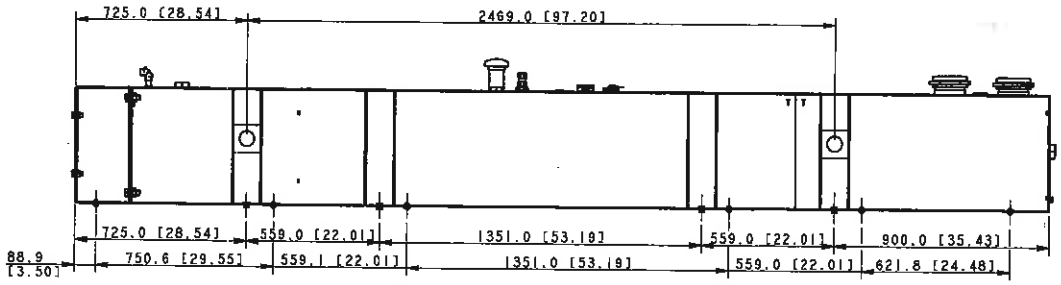

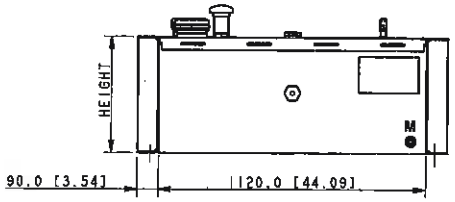

■ 8XØ25.4 [1.0] STANDARD MOUNTING
◆ 12XØ22.2 [0.88] IBC MOUNTING

GENSET	A	B	C
180KW	571 [22.5]	310 [12.2]	90 [3.5]
200KW	561 [22.1]	195 [7.7]	100 [3.9]

STANDARD TANK
180 MODEL 60HZ 4S15, 4S12X & 4S13X
200 MODEL 4UA9, 4UA13 & 4S13X
RECONNECTABLE
IMPROVED MOTOR STARTING (IMS) &
600V ALTERNATOR
JOHN DEERE 6068HF485, TIER III

REV	DATE	ON COMPOSITE DWGS, SEE PART NO. FOR REVISION LEVEL	BY
B	11-16-10	(A-8,A-7,A-6,A-5,A-4) 88.9,750.6,559.1,1351.0, (12XØ22.2,559.0,621.8 ADDED [90633]	JOEL
C	6-29-11	SEE SHEET 2 [91839]	KMF
D	12-1-11	VIEWS UPDATED [92417-4]	PKD
E	2-7-12	(A-4) 180 & 200 MODEL NOTE UPDATED, SEE SHEET 2 [92881]	PKD
F	06-11-14	(A-4) STANDARD TANK NOTE ADDED & SEE SHEET 2 [CT89102]	PAS

UNLESS OTHERWISE SPECIFIED: - 1) DIMENSIONS ARE IN MILLIMETERS 2) TOLERANCES ARE: X.XX ± 0.25, X.X ± 1.0, ANGLES ± 0° 30' MAX. SURFACE FINISH

TRUE ANGLE VERIFICATION

APPROVALS		DATE
DRAWN	PKD	1-20-10
CHECKED	AJD	1-20-10
APPROVED	AJD	1-20-10

KOHLER CO. METRIC | PRO-E
POWER SYSTEMS, KOHLER, WI 53044 U.S.A.

THIS DRAWING IN DESIGN AND DETAIL IS KOHLER CO. PROPERTY AND MUST NOT BE USED EXCEPT IN CONNECTION WITH KOHLER Co. WORK. ALL RIGHTS OF DESIGN OR INVENTION ARE RESERVED.

TITLE **DIMENSION PRINT**

SCALE 0.16 CAD DWG. SHEET 1 of 2
DWG NO. **ADV-7859** D

MODEL	CAPACITY		WEIGHT		HEIGHT		E-Vent	
	LITERS	GAL	KG	LBS	MM	IN	SIZE (IN)	QTY
180/200kW	1576	416	1234	2721	457.2	18.0	4.0	2.0
180/200kW	2896	765	1560	3440	762.0	30.0	5.0	2.0

TANK FITTINGS:

A. 'A' NPT EMERGENCY VENT FITTING PER NFPA 30 WITH VENT CAPS
B. 4" NPT FUEL FILL FTTING WITH LOCKABLE CAP AND RISER. PLUG & SHIP WITH TANK NI NBOX ATTACHED TO TANK
C. 2" NPT FUEL LEVEL GAUGE FITING
D. 2" NPT NORMAL VENT FITTING WITH MUSHROOM VENT CAP AND 5" RISER.
E. 2" NPT FITTING FOR REMOVABLE ENGINE SUPPLY DIP TUBE (3/8" NPT FEMALE WITH CHECK VALVE)
F. 2" NPT FITTING FOR REMOVABLE FUEL RETURN DIP TUBE (3/8" NPT FEMALE)
H. 2" NPT FOR LOW LEVEL SWITCH (SET AT 50% FULL, SILICONE PACKED)
J. 2" NPT ADDITIONAL FITTING FOR OPTIONAL ACCESSORY (INSTALL 2" NPT PIPE PLUG)
M. 2" NPT BASIN DRAIN (PLUGGED
N. 2" NPT FOR FUEL IN BASIN SWITCH
P. 2" NPT ADDITIONAL FITTING FOR OTPIONAL ACCESORY (INSTALL 2" NPT PIPE PLUG)
S. 2" NPT FUEL LEVEL GAUGE FITTING WITH SENDER

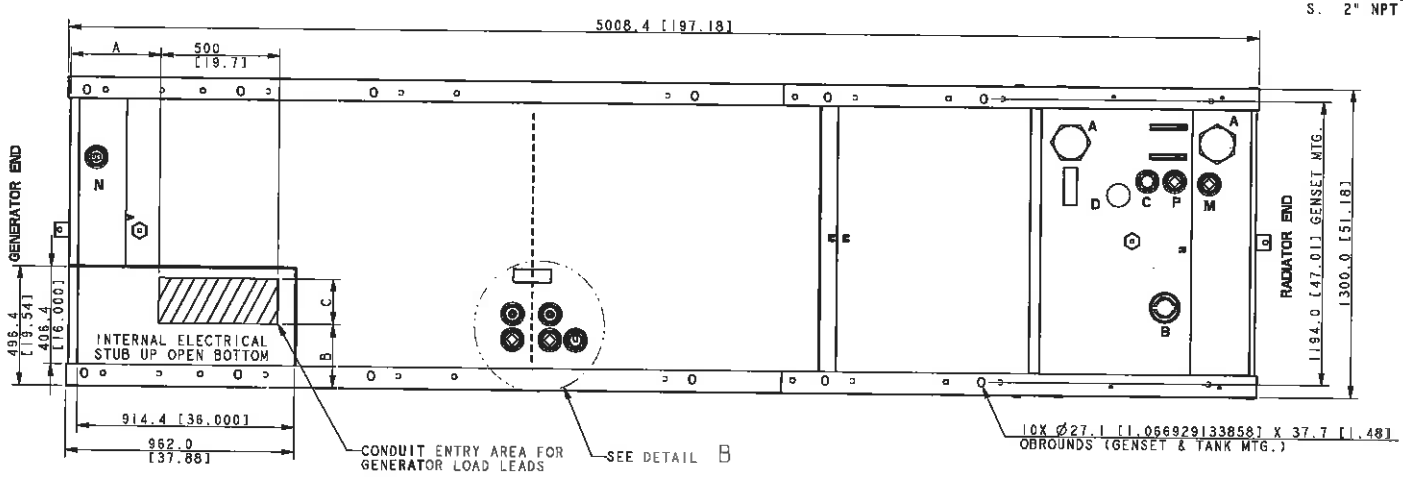

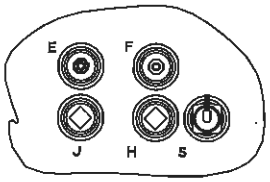

DETAIL B
SCALE 0.200

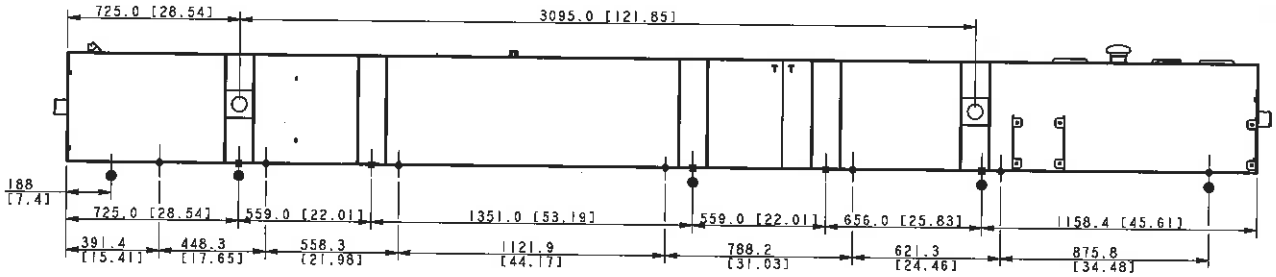

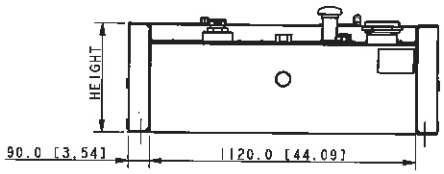

■ 10XØ25.4 [1.0] STANDARD MOUNTING
◆ 14XØ22.2 [0.88] IBC MOUNTING
● 10XØ25.4 [1.0] BOTTOM BEAM MOUNTING

GENSET	A	B	C
180KW	571 [22.5]	310 [12.2]	90 [3.5]
200KW	561 [22.1]	195 [7.7]	100 [3.9]

STATE TANK
180 MODEL 6CHZ 4S15, 4S12X & 4S13X
200 MODEL 4UA9, 4UA13 & 4S13X
RECONNECTABLE
IMPROVED MOTOR STARTING (IMS) &
600V ALTERNATOR
JOHN DEERE 6068HF485, TIER III

REV	DATE	OR COMPOSITE DWGS, SEE PART NO. FOR REVISION LEVEL	BY
B	11-16-10	(A-8,A-7,A-6,A-5,A-4) 391.4,448.3,558.3,1121.9	
		788.2,621.3,875.8 ADDED [90833]	JOEL
C	6-29-11	(A-8) 188(7.4) ADDED, (A-6) 10X25.4 ADDED [810391]	KMP
D	12-1-11	VIEWS UPDATED [82417-4]	PKD
E	2-7-12	(A-4) 180 & 200 MODEL NOTE UPDATED, SEE SHEET 1	
		[92601]	PKD
F	08-11-14	(A-4) STATE TANK NOTE ADDED & SEE SHEET	
		1 [C789102]	PAS

UNLESS OTHERWISE SPECIFIED -- 1) DIMENSIONS ARE IN MILLIMETERS 2) TOLERANCES ARE:
X.XX ± 0.25
X.X ± 1.0
X.X ± 1.5
ANGLES ± 1° 30'
SURFACE FINISH MAX.
FINISH WHERE INDICATED

APPROVALS		DATE
DRAWN	PKD	1-20-10
CHECKED	AJD	1-20-10
APPROVED	AJD	1-20-10

KOHLER CO. METRIC PRO-E
POWER SYSTEMS, KOHLER, WI 53044 U.S.A.

THIS DRAWING IS DESIGN AND DETAIL AS KOHLER CO. PROPERTY AND MUST NOT BE USED EXCEPT IN CONNECTION WITH KOHLER CO. WORKS. ALL RIGHTS OF DESIGN OR INVENTION ARE RESERVED.

TITLE **DIMENSION PRINT**

SCALE 0.10 | CAD NO. | SHEET 2 of 2
DWG NO. **ADV-7859** | D

KOHLER. Power Systems

Weather/Sound Enclosure and Subbase Fuel Tank Package

ISO 9001
KOHLER POWER SYSTEMS
NATIONALLY REGISTERED

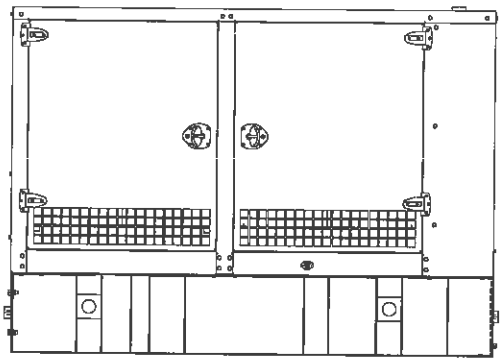

Enclosure with Standard Subbase Fuel Tank

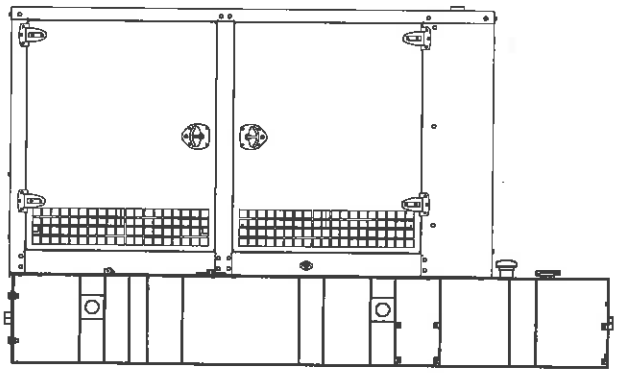

Enclosure with State Code Subbase Fuel Tank

Available Approvals and Listings

- ❑ UL 2200 Listing
- ❑ CSA Certified
- ❑ IBC Seismic Certification
- ❑ California OSHPD Approval
- ❑ cUL Listing (fuel tanks only)

NOTE: Some models may have limited third-party approvals, see your local distributor for details.

Applicable to the following:

20-40REOZJC
50/60REOZJD
80/100/150/180/200REOZJF
125/180REOZJG
40/50/230-275REOZJE
300REOZJ

Weather Enclosure Standard Features

- Internal-mounted silencer and flexible exhaust connector.
- Lift base or tank-mounted, steel construction with hinged doors.
- Fade-, scratch-, and corrosion-resistant Kohler® Power Armor™ cream beige automotive-grade textured finish.
- Enclosure has four large access doors which allow for easy maintenance.
- Lockable, flush-mounted door latches.
- Vertical air inlet and outlet discharge to redirect air and reduce noise.
- Certified to withstand 241 kph (150 mph) wind load rating.

Sound Enclosure Standard Features

- Includes all of the weather enclosure features with the addition of acoustic insulation material.
- Lift base or tank-mounted, steel or aluminum construction with hinged doors. Aluminum enclosures are recommended for high humidity and/or high salt/coastal regions.
- Acoustic insulation that meets UL 94 HF1 flammability classification and repels moisture absorption.
- Sound attenuated enclosure that uses up to 51 mm (2 in.) of acoustic insulation.

Subbase Fuel Tank Features

- The fuel tank has a Power Armor Plus™ textured epoxy-based rubberized coating.
- The above-ground rectangular secondary containment tank mounts directly to the generator set, below the generator set skid (subbase).
- Both the inner and outer tanks have emergency relief vents.
- Flexible fuel lines are provided with subbase fuel tank selection.
- The secondary containment generator set base tank meets UL 142 tank requirements. The inner (primary) tank is sealed inside the outer (secondary) tank. The outer tank contains the fuel if the inner tank leaks or ruptures.
- State tanks with varying capacities are an available option. Florida Dept. of Environmental Protection (FDEP) File No. EQ-634 approved.

Subbase Fuel Tank

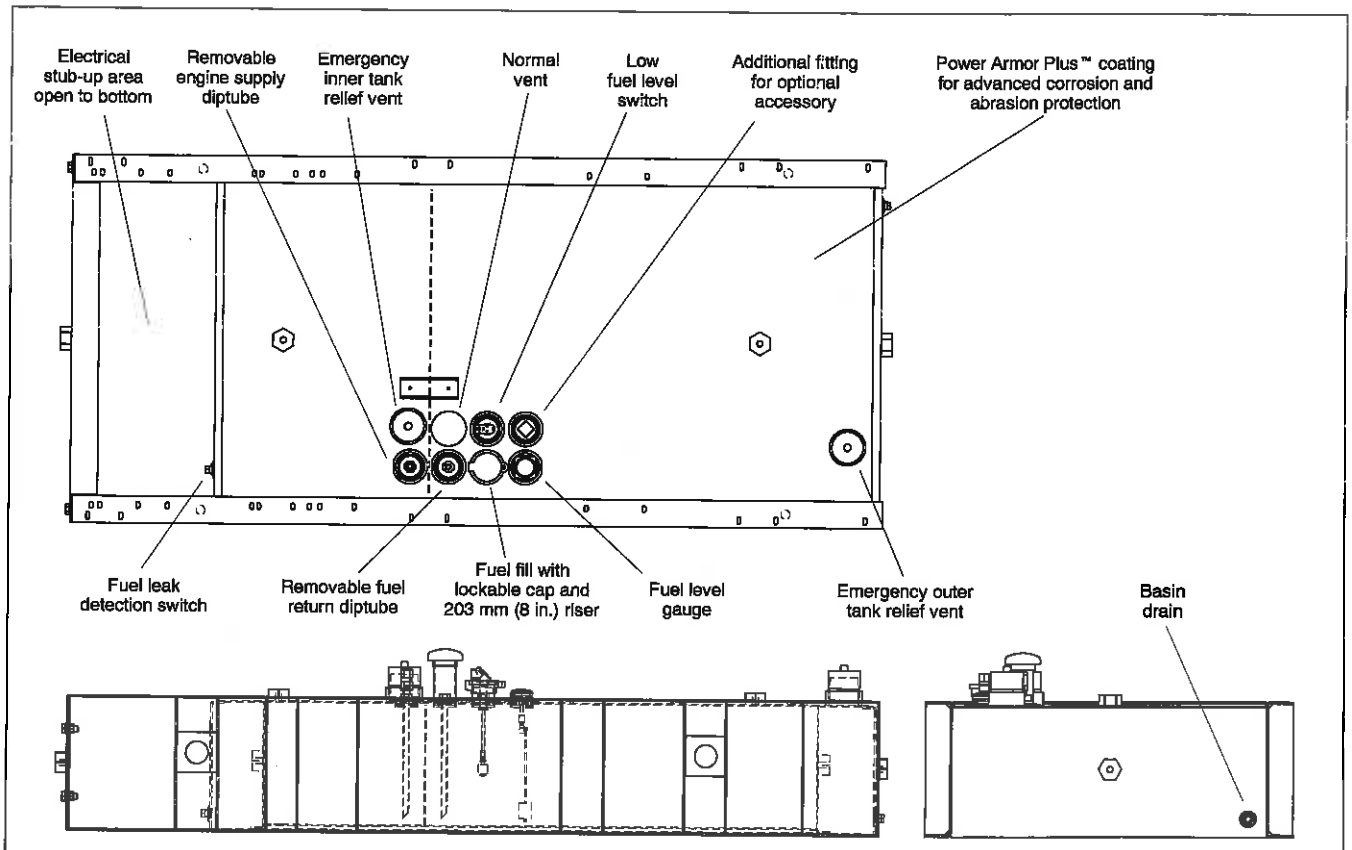

Note: 20–40REOZJC models shown, other models are similar. Refer to the respective ADV drawings for details.

ADV-7430-

Standard Subbase Fuel Tank Features

- Extended operation. Usable tank capacity offers full load standby operation of up to 72 hours.
- Power Armor Plus™ textured epoxy-based rubberized coating that creates an ultra-thick barrier between the tank and harsh environmental conditions like humidity, saltwater, and extreme temperatures, and provides advanced corrosion and abrasion protection.
- UL listed. Secondary containment generator set base tank meeting UL 142 requirements.
- NFPA compliant. Designed to comply with the installation standards of NFPA 30 and NFPA 37.
- Integral external lift lugs. Enables crane with spreader-bar lifting of the complete package (empty tank, mounted generator set, and enclosure) to ensure safety.
- Emergency pressure relief vents. Vents ensure adequate venting of the inner and outer tank under extreme pressure and/or emergency conditions.
- Normal vent with cap. Vent is raised above lockable fuel fill.
- Low fuel level switch. Annunciates a 50% low fuel level condition at generator set control.
- Leak detection switch. Annunciates a contained primary tank fuel leak condition at generator set control.
- Electrical stub-up.

Enclosure and Subbase Fuel Tank Specifications

Fuel Tank Capacity, L (gal.)	Est. Fuel Supply Hours at 60 Hz with Full Load, Nominal/Actual	Enclosure and Subbase Fuel Tank					Fuel Tank Height, mm (in.)	Sound Pressure at 60 Hz with Full Load at 7 m (23 ft.), Weather/ Sound dB(A)
		Max. Dimensions, mm (in.)			Max. Weight, kg (lb.) *			
		Length	Width	Height	With Steel Enclosure	With Aluminum Enclosure		
20REOZJC without IBC Seismic Certification								
No Tank	0	2320 (91.3)	1077 (42.4)	1438 (56.6)	943 (2080)	830 (1830)	152 (6)	78/65
295 (78)	24/41			1722 (67.8)	1167 (2572)*	1053 (2322)*	305 (12)	
424 (112)	36/58			1824 (71.8)	1201 (2647)*	1087 (2397)*	406 (16)	
621 (164)	48/86			1976 (77.8)	1251 (2759)*	1138 (2509)*	559 (22)	
20REOZJC with IBC Seismic Certification								
No Tank	0	2320 (91.3)	1077 (42.4)	1384 (54.6)	943 (2080)	830 (1830)	100 (4)	78/65
295 (78)	24/41			1671 (65.8)	1272 (2806)*	1159 (2556)*	254 (10)	
428 (113)	36/59			1773 (69.8)	1321 (2913)*	1208 (2663)*	358 (14)	
625 (165)	48/86			1925 (75.8)	1393 (3073)*	1280 (2823)*	508 (20)	
20REOZJC with State Code Fuel Tank†								
439 (116)	24/61	2896 (114)	1077 (42.4)	1671 (65.8)	1362 (3003)*	1249 (2753)*	358 (14)	78/65
556 (147)	48/77			1849 (72.8)	1459 (3217)*	1346 (2967)*	432 (17)	
958 (253)	72/133			2103 (82.8)	1514 (3338)*	1401 (3088)*	686 (27)	
30REOZJC without IBC Seismic Certification								
No Tank	0	2320 (91.3)	1077 (42.4)	1438 (56.6)	1007 (2220)	894 (1970)	152 (6)	78/65
295 (78)	24/27			1722 (67.8)	1230 (2712)*	1117 (2462)*	305 (12)	
424 (112)	36/40			1824 (71.8)	1264 (2787)*	1151 (2537)*	406 (16)	
621 (164)	48/58			1976 (77.8)	1315 (2899)*	1202 (2649)*	559 (22)	
30REOZJC with IBC Seismic Certification								
No Tank	0	2320 (91.3)	1077 (42.4)	1384 (54.6)	1007 (2220)	894 (1970)	100 (4)	78/65
295 (78)	24/27			1671 (65.8)	1336 (2946)*	1223 (2696)*	254 (10)	
428 (113)	36/40			1773 (69.8)	1385 (3053)*	1271 (2803)*	358 (14)	
625 (165)	48/58			1925 (75.8)	1457 (3213)*	1344 (2963)*	508 (20)	
30REOZJC with State Code Fuel Tank†								
439 (116)	24/41	2896 (114)	1077 (42.4)	1671 (65.8)	1424 (3139)*	1311 (2889)*	358 (14)	78/65
556 (147)	48/52			1849 (72.8)	1521 (3353)*	1408 (3103)*	432 (17)	
958 (253)	72/90			2103 (82.8)	1576 (3474)*	1463 (3224)*	686 (27)	
40REOZJC without IBC Seismic Certification								
No Tank	0	2320 (91.3)	1077 (42.4)	1438 (56.6)	966 (2130)	853 (1880)	152 (6)	78/65
424 (112)	24/32			1824 (71.8)	1223 (2697)*	1110 (2447)*	406 (16)	
621 (164)	48/48			1976 (77.8)	1274 (2809)*	1161 (2559)*	559 (22)	
946 (250)	72/73			2230 (87.8)	1555 (3429)*	1442 (3179)*	813 (32)	
40REOZJC with IBC Seismic Certification								
No Tank	0	2320 (91.3)	1077 (42.4)	1384 (54.6)	966 (2130)	853 (1880)	100 (4)	78/65
428 (113)	24/33			1773 (69.8)	1344 (2963)*	1231 (2713)*	358 (14)	
625 (165)	48/48			1925 (75.8)	1416 (3123)*	1303 (2873)*	508 (20)	
958 (253)	72/74			2179 (85.8)	1736 (3826)*	1622 (3576)*	762 (30)	
40REOZJC with State Code Fuel Tank†								
439 (116)	24/34	2896 (114)	1077 (42.4)	1671 (65.8)	1451 (3199)*	1338 (2949)*	358 (14)	78/65
958 (253)	48/74			2103 (82.8)	1575 (3472)*	1462 (3222)*	686 (27)	

Note: Data in table is for reference only, refer to the respective ADV drawings for details.

Note: Refer to TIB-114 for generator set sound data.

* Max. weight includes the generator set (wet) using the largest alternator option, enclosure with acoustic insulation added, silencer, and tank (no fuel).

† State code fuel tank specifications (height and weight) include I-beam option.

Fuel Tank Capacity, L (gal.)	Est. Fuel Supply Hours at 60 Hz with Full Load, Nominal/Actual	Enclosure and Subbase Fuel Tank					Fuel Tank Height, mm (in.)	Sound Pressure at 60 Hz with Full Load at 7 m (23 ft.), Weather/ Sound dB(A)
		Max. Dimensions, mm (in.)			Max. Weight, kg (lb.) *			
		Length	Width	Height	With Steel Enclosure	With Aluminum Enclosure		
80REOZJF without IBC Seismic Certification								
No Tank	0	2821 (111.1)	1156 (45.5)	1575 (62)	1483 (3269)	1351 (2979)	152 (6)	83/69
791 (209)	24/30			1930 (76)	1766 (3894)*	1635 (3604)*	508 (20)	
1317 (348)	48/50			2235 (88)	1882 (4150)*	1751 (3860)*	813 (32)	
80REOZJF with IBC Seismic Certification								
No Tank	0	2821 (111.1)	1156 (45.5)	1525 (60)	1483 (3269)	1351 (2979)	102 (4)	83/69
757 (200)	24/28			1880 (74)	1851 (4080)*	1719 (3790)*	457 (18)	
1313 (347)	48/50			2185 (86)	2108 (4647)*	1976 (4357)*	762 (30)	
80REOZJF with State Code Fuel Tank†								
814 (215)	24/31	3400 (133.9)	1156 (45.5)	1855 (73)	1996 (4400)*	1864 (4110)*	432 (17)	83/69
1571 (415)	48/60			2185 (86)	2236 (4929)*	2104 (4639)*	762 (30)	
100REOZJF without IBC Seismic Certification								
No Tank	0	2821 (111.1)	1156 (45.5)	1575 (62)	1592 (3510)	1461 (3220)	152 (6)	82/69
791 (209)	24/25			1930 (76)	1875 (4134)*	1744 (3844)*	508 (20)	
1696 (448)	48/54	3400 (133.9)		2235 (88)	2070 (4564)*	1939 (4274)*	813 (32)	
100REOZJF with IBC Seismic Certification								
No Tank	0	2821 (111.1)	1156 (45.5)	1525 (60)	1592 (3510)	1461 (3220)	102 (4)	82/69
757 (200)	24/24			1880 (74)	1960 (4320)*	1828 (4030)*	457 (18)	
1699 (449)	48/54	3400 (133.9)		2185 (86)	2345 (5170)*	2214 (4880)*	762 (30)	
100REOZJF with State Code Fuel Tank†								
814 (215)	24/26	3400 (133.9)	1156 (45.5)	1855 (73)	2105 (4641)*	1974 (4351)*	432 (17)	82/69
1571 (415)	48/50			2185 (86)	2345 (5170)*	2214 (4880)*	762 (30)	
125REOZJG								
No Tank	0	3532 (139.0)	1153 (45.4)	1753 (69)	1651 (3632)	1515 (3333)	0 (0)	87/73
1128 (298)	24/30			2236 (88)	2400 (5280)*	2264 (4981)*	483 (19)	
2207 (583)	48/58			2667 (105)	2751 (6052)*	2615 (5753)*	914 (36)	
125REOZJG with State Code Fuel Tank†								
1196 (316)	24/31	4414 (173.8)	1153 (45.4)	2236 (88)	2382 (5240)*	2446 (4941)*	483 (19)	87/73
2252 (595)	48/60			2591 (102)	2654 (5839)*	2500 (5511)*	838 (33)	
150REOZJF								
No Tank	0	3532 (139.0)	1153 (45.4)	1753 (69)	1860 (4101)	1724 (3800)	0 (0)	86/75
1128 (298)	24/25			2236 (88)	2609 (5752)*	2473 (5452)*	483 (19)	
2207 (583)	48/49			2667 (105)	2960 (6526)*	2824 (6226)*	914 (36)	
150REOZJF with State Code Fuel Tank†								
1196 (316)	24/27	4414 (173.8)	1153 (45.4)	2236 (88)	2591 (5712)*	2455 (5412)*	483 (19)	86/75
2252 (595)	48/50			2591 (102)	2890 (6361)*	2727 (6012)*	838 (33)	

Note: Data in table is for reference only, refer to the respective ADV drawings for details.

Note: Refer to TIB-114 for generator set sound data.

* Max. weight includes the generator set (wet) using the largest alternator option, enclosure with acoustic insulation added, silencer, and tank (no fuel).

† State code fuel tank specifications (height and weight) include I-beam option.

Enclosure and Subbase Fuel Tank Specifications (continued)

300REOZJ

No Tank	0	4121 (162.3)	1338 (52.7)	2157 (84.9)	2835 (6250)	2722 (6000)	0 (0)	89/75
2067 (546)	24/24			2735 (107.7)	3770 (8311)*	3656 (8061)*	838 (33)	

300REOZJ with State Code Fuel Tank†

2101 (555)	24/25	5009 (197.2)	1338 (52.7)	2792 (109.9)	4076 (8987)*	3963 (8737)*	635 (25)	89/75
4065(1074)	48/48	5588 (220.0)		3071 (120.9)	4644 (10238)*	4530 (9988)*	914 (36)	

Note: Data in table is for reference only, refer to the respective ADV drawings for details.

Note: Refer to TIB-114 for generator set sound data.

* Max. weight includes the generator set (wet) using the largest alternator option, enclosure with acoustic insulation added, silencer, and tank (no fuel).

† State code fuel tank specifications (height and weight) include I-beam option.

ARCADIS

SUBJECT: TOPOK - UTILITY PAD

JOB NO:

BY: MSL DATE: 12/23/14

CHKD: DATE:

PAGE H-26

SHEET 1

TRANSFORMER

- REF SHT H-27 FOR TRANSFORMER MFG DATA
  - ↳ 6'-2" x 4'-6" @ 3160# → 114psf < 1325psf NET ALLOWABLE ✓OK
- BY INSPECTION, 1'-2" THICK w/ #5 @ 10" o/c EF/EW (3" COVER BOT & 2" COVER TOP) IS SUFFICIENT TO HANDLE UNIFORM LOADS.
- TRANSFORMER ANCHORAGE BY EQUIP MFG

POTABLE WATER PUMP & BLADDER TANK

- REF SHT H-28 FOR PUMP/BLADDER TANK SKID INFO
  - ↳ 9'-0" x 5'-0" → BLADDER TANK - 158 GAL x 8.34#/GAL + 200# TANK DL
    TOTAL = 1518# x 2 ← FOR PUMP/PIPING & SKID
    ↳ 3035#/(9' x 5') = 67.5psf < 1325psf NET ALLOWABLE ✓OK
- W/ (2) STEEL BEAMS @ 5'-0" o/c

AGM Form 30 12-01

H-27

Three-phase pad-mounted PEAK™ transformer

General

PEAK™ transformers from Eaton's Cooper Power Systems represent the next generation of transformer design, and with two distinct product offerings there is a PEAK transformer to fit your needs. The first PEAK transformer option is a 75 °C average winding rise (AWR) design that offers users a smaller and lighter footprint than today's 65 °C AWR transformers. This design is ideal for applications with size, weight, and dimensional constraints. The second PEAK transformer option is a 65/75 °C AWR design that offers users sustained overload capacity while maintaining IEEE Std C57.91™-2011 standard per unit life requirements. This design offers customers flexibility in transformer sizing by offering the ability to accommodate future load growth without oversizing relative to current load, or the ability to meet periods of peak demand without oversizing based on continuous load.

With both PEAK product offerings being comprised of thermally upgraded kraft paper and Envirotemp™ FR3™ dielectric fluid, all PEAK transformers offer customers a high temperature insulation system that is fully compatible with the new IEEE® standard for transformers using high-temperature insulation systems, IEEE Std C57.154™-2012 standard. In addition, all PEAK transformers provide the high fire point and environmental benefits of Envirotemp™ FR3™ fluid. PEAK transformers are available in various designs and configurations to match almost every application.

Cooper
Power Systems
by EATON

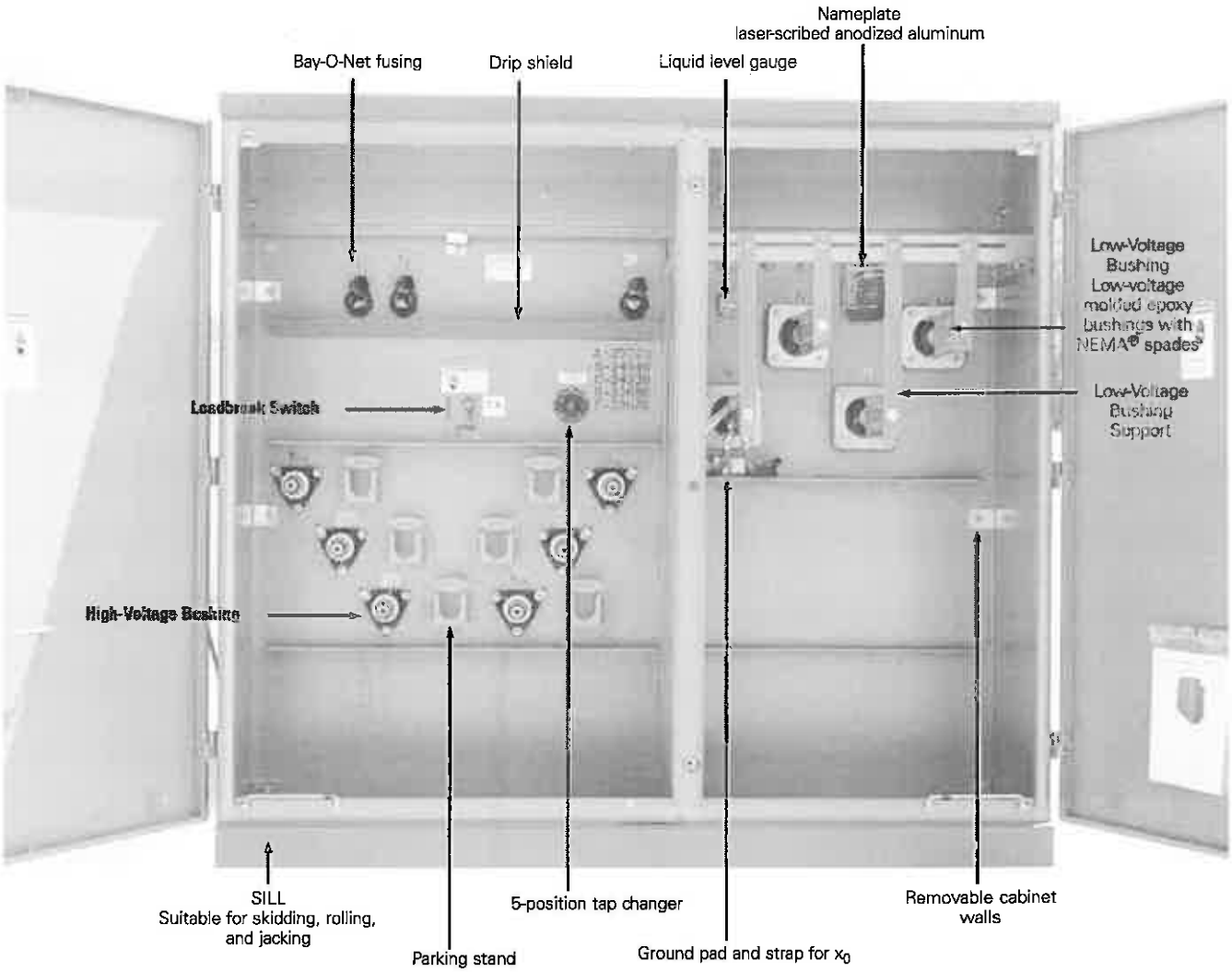

Figure 1. Three-phase pad-mounted PEAK transformer.

Table 1. Product scope

Type	Three-Phase, 50 or 60 Hz, 75 °C Rise and 65 °C/75 °C
Fluid Type	Only Envirotemp™ FR3™ fluid
Coil Configuration	2-winding or 4-winding or 3-winding (Low-High-Low), 3-winding (Low-Low-High)
Size	45 – 12,000 kVA
Primary Voltage	2,400 – 46,000 V
Secondary Voltage	208Y/120 V to 14,400 V
Specialty Designs	Inverter/Rectifier Bridge
	K-Factor (up to K-19)
	Solar/Wind Designs
	Differential Protection
	Seismic Applications (including OSHPD)
	Hardened Data Center
	UL® Listed & Label and Classified
	Factory Mutual (FM) Approved®

Table 2. Three-Phase Ratings

Three-Phase 50 or 60 Hz
kVA Available[1]: 45, 75, 112.5, 150, 225, 300, 500, 750, 1000, 1500, 2000, 2500, 3000, 3750, 5000, 7500, 10000, 12000

[1]Transformers are available in the standard ratings and configurations shown or can be customized to meet specific needs.

Table 3. Audible Sound Levels

Self-Cooled, Two Winding kVA Rating	NEMA® TR-1 Average Decibels (dB)
45-500	56
501-700	57
701-1000	58
1001-1500	60
1501-2000	61
2001-2500	62
2501-3000	63
3001-4000	64
4001-5000	65
5001-6000	66
6001-7500	67
7501-12000	68

Table 4. Insulation Test Levels

KV Class	Induced Test 180 or 400 Hz 7200 Cycle	kV BIL Distribution	Applied Test 60 Hz (kV)
1.2	Twice Rated Voltage	30	10
2.5		45	15
5		60	19
8.7		75	26
15		95	34
25 (grd Y Only)		125	40
25		150	50
34.5 (grd Y Only)		125	40
34.5		150	70

Table 5. Temperature Rise Ratings 0-3300 Feet (0-1000 meters)

	Unit Rating (Temperature Rise Winding)	
	75 °C	65/75 °C
Ambient Temperature Max.	40 °C	40 °C
Ambient Temperature 24 Hour Average	30 °C	30 °C
Temperature Rise Hotspot	90 °C	90 °C

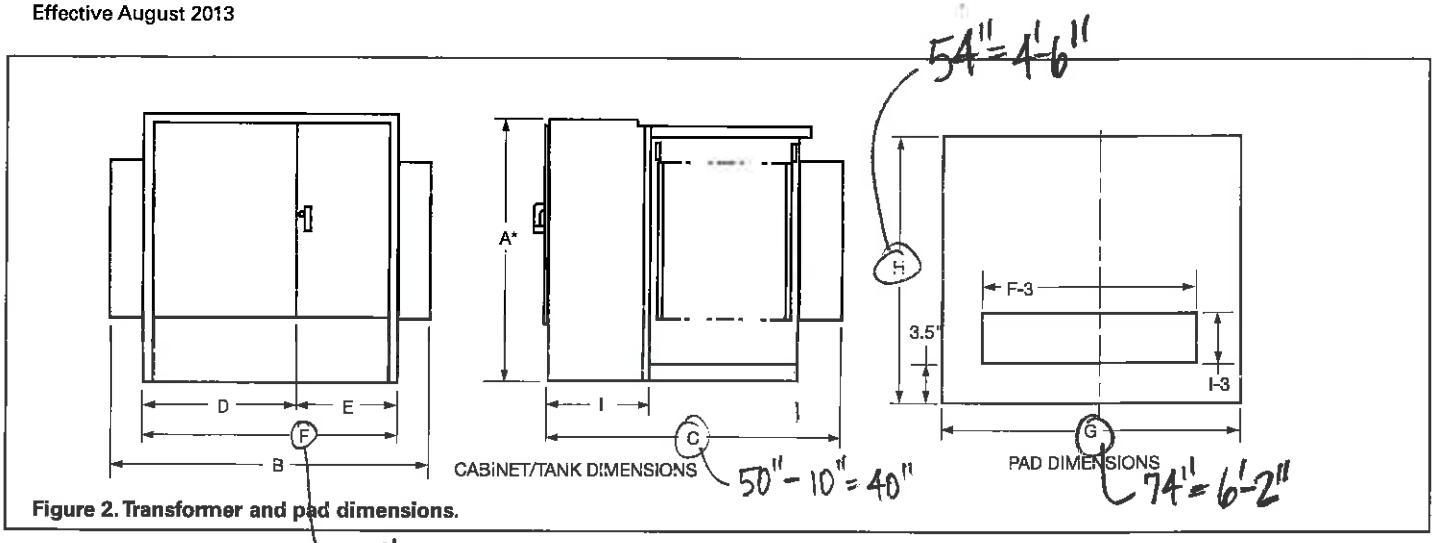

Figure 2. Transformer and pad dimensions.

* Add 9" for Bay-O-Net fusing.

Table 6. Fluid-Filled—Aluminum Windings 65 °C Rise[1]

kVA	A	B	C	D	E	F	G	H	I	GALLONS	WEIGHT
45	50	66	40	41	25	66	70	44	20	102	1990
75	50	66	40	41	25	66	70	44	20	102	1990
112.5	50	66	40	41	25	66	70	44	20	108	2150
150	50	66	41	41	25	66	70	45	20	115	2330
225	50	71	50	41	30	71	75	54	20	127	2810
300	50	71	50	41	30	71	75	54	20	136	3200
500	50	79	52	41	30	71	83	56	20	170	4200
750	64	82	56	41	30	71	86	60	20	242	5390
1000	64	82	59	41	30	71	86	63	20	305	7120
1500	64	76	90	42	29	71	80	94	24	356	9980
2000	72	76	90	42	29	71	80	94	24	520	11079
2500	72	79	97	42	29	71	83	101	24	550	13340
3000	84	88	98	49	29	78	92	102	24	625	14820
3750	84	88	103	49	29	78	92	107	24	671	17640
5000	84	99	108	50	30	80	103	112	24	910	21750
7500	94	100	108	48	48	96	104	112	24	1017	25100
10000	94	100	120	48	48	96	104	124	24	1500	38900

[1] Weights, gallons of fluid, and dimensions are for reference only and not for construction. Please contact Eaton's Cooper Power Systems for exact dimensions.

* Add 9" for Bay-O-Net fusing.

Table 7. Fluid-Filled—Aluminum Windings 75 °C Rise[1]

kVA	A	B	C	D	E	F	G	H	I	GALLONS	WEIGHT
45	50	66	40	41	25	66	70	44	20	102	1990
75	50	66	40	41	25	66	70	44	20	102	1990
112.5	50	66	40	41	25	66	70	44	20	104	2150
150	50	66	40	41	25	66	70	44	20	106	2310
225	50	70	40	41	29	70	74	44	20	120	2710
300	50	70	50	41	29	70	74	54	20	132	3160
500	50	70	53	41	29	70	74	57	20	168	4090
750	64	70	57	41	29	70	74	61	20	237	5300
1000	64	70	58	41	29	70	74	62	20	284	6650
1500	64	71	64	42	29	71	75	68	24	347	9840
2000	64	71	68	42	29	71	75	72	24	393	10790
2500	64	71	91	42	29	71	75	95	24	406	13300
3000	72	71	108	42	29	71	75	112	24	559	14560
3750	72	78	102	46	32	78	82	106	24	634	17440
5000	84	85	112	47	38	85	89	116	24	755	20645
7500	84	88	120	48	40	88	92	124	24	890	23060
10000	84	88	130	48	40	88	92	134	24	990	27300

[1] Weights, gallons of fluid, and dimensions are for reference only and not for construction. Please contact Eaton's Cooper Power Systems for exact dimensions.

* Add 9" for Bay-O-Net fusing.

Standard features

Connections and neutral configurations

- Delta-Wye: Low voltage neutral shall be a fully insulated X0 bushing with removable ground strap.
- Grounded Wye-Wye: High voltage neutral shall be internally tied to the low voltage neutral and brought out as the H0X0 bushing in the secondary compartment with a removable ground strap.
- Delta-Delta: Transformer shall be provided without a neutral bushing.
- Wye-Wye: High voltage neutral shall be brought out as the H0 bushing in the primary compartment and the low voltage neutral shall be brought as the X0- bushing in the secondary compartment.
- Wye-Delta: High voltage neutral shall be brought out as the H0 bushing in the primary compartment. No ground strap shall be provided (line to line rated fusing is required).

High and low voltage bushings

- 200 A bushing wells (15, 25, 35 kV)
- 200 A, 35 kV large Interface
- 600 A (15, 25, 35 kV) integral bushings (dead-front)
- Electrical-grade wet-process porcelain bushings (live-front)

Tank/cabinet features

- Bolted cover for tank access (45-1750 kVA)
- Welded cover with hand hole (2000-12,000 kVA)
- Three-point latching door for security
- Removable sill for easy installation
- Lifting lugs (4)
- Stainless steel cabinet hinges and mounting studs
- Steel divider between HV and LV compartment
- 20" deep cabinet (45-1000 kVA)
- 24" deep cabinet (1500-7500 kVA)
- 30" deep cabinet (34.5/19.92 kV)
- Pentahead captive bolt
- Stainless steel 1-hole ground pads (45-500 kVA)
- Stainless steel 2-hole ground pads (750-10,000 kVA)
- Parking stands

Valves/plugs

- One-inch upper filling plug
- One-inch drain plug (45-500 kVA)
- One-inch combination drain valve with sampling device in low voltage compartment (750-12,000 kVA)
- Automatic pressure relief valve

Nameplate

- Laser-scribed anodized aluminum nameplate

Figure 3. Drain valve with sampler.

Figure 4. Automatic pressure relief valve.

Figure 5. Liquid level gauge.

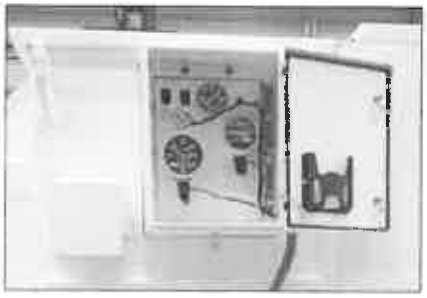

Figure 6. External Gauges.

Figure 7. External visible break with gauges.

Optional features

High and low voltage bushings

- 200 A (15, 25 kV) bushing inserts
- 200 A (15, 25 kV) feed thru inserts
- 200 A (15, 25 kV) (HTN) bushing wells with removable studs
- High-voltage 600 A (15, 25, 35 kV) deadbreak one-piece bushings
- Low-voltage 6-, 8-holes spade
- Low-voltage 12-, 16-, 20-holes spade (750-2500 kVA)
- Low-voltage bushing supports

Tank/cabinet features

- Stainless steel tank base and cabinet
- Stainless steel tank base, cabinet sides and sill
- 100% stainless steel unit
- Service entrance (2 inch) in sill or cabinet side
- Touch-up paint (domestic)
- Copper ground bus bar
- Kirk-Key provisions
- Nitrogen blanket
- Bus duct cutout

Special designs

- Triplex
- High Altitude
- K-Factors
- Step-up
- Critical application
- Modulation transformers
- Seismic applications (including California Office of Statewide Health Planning and Development, OSHPD)

Switches

- 100 A, 150 A, 300 A tap-changers
- Dual-voltage switch
- One, two, or three On/Off loadbreak switches
- 4-position loadbreak V-blade switch or T-blade switch
- Delta-wye switch
- 3-position V-blade selector switch
- Visible break with VFI interrupter interlock
- External visible break (15, 25, and 35 kV, up to 3 MVA)
- External visible break with gauges (15, 25, and 35 kV, up to 3 MVA)

Gauges and devices

- Liquid level gauge (optional contacts)
- Pressure vacuum gauge (optional contacts and bleeder)
- Dial-type thermometer (optional alarm contacts)
- Cover-mounted pressure relief device
- Ground connectors
- Hexhead captive bolt
- Breaker mounting provisions
- External gauges in padlockable box

Overcurrent protection

- Cartridge fusing in series with a partial-range under-oil ELSP current-limiting fuse (above 23 kV)
- MagneX™ interrupter with ELSP current-limiting fuse
- Visible break window
- Fuse/switch interlock

Valves/plugs

- Drain/sampling valve in high-voltage compartment
- Globe-type upper fill valve

Overvoltage protection

- Distribution-, intermediate-, or station-class surge arresters
- Elbow arresters (for dead-front connections)

Metering/fan/control

- Full metering package
- Metering socket
- NEMA® 4 control box (optional stainless steel)
- NEMA® 7 control box (explosion proof)
- Fan packages

Testing

- Customer test witness
- Customer final inspection
- Zero sequence impedance test
- Heat Run Test
- ANSI® Impulse Test
- Audible Sound Level Test
- RIV (Corona) Test
- Dissolved Gas Analysis (DGA) Test
- 8- or 24-Hour Leak Test

Coatings (Paint)

- ANSI® bell green
- ANSI® #61 light gray
- ANSI® #70 sky gray
- Special paint (available per request)

Nameplate

- Stainless steel nameplate

Decals and labels

- High-voltage warning signs
- Mr. Ouch decal
- Bi-lingual warning
- DOE compliant
- Customer stock code
- Customer stenciling
- Shock and arc flash warning decal
- Non-PCB decal

Construction

Core

The three-legged, step-lap mitered core construction is manufactured using a high-quality cutting machine. For maximum efficiency, cores are precisely stacked, virtually eliminating gaps in the corner joints.

Five-legged wound core or shell-type triplex designs are used for wye-wye connected transformers, and other special transformer designs.

Cores are manufactured with precision cut, burr-free, grain-oriented silicon steel. Many grades of core steel are available for optimizing core loss efficiency.

Coils

Pad-mounted transformers feature a rectangular coil configuration with wire-wound, high-voltage primaries and sheet-wound secondaries. The design minimizes axial stress developed by short circuits and provides for magnetic balancing of tap connections.

Coils are wound using the highest quality winding machines providing exacting tension control and conductor placement for superior short-circuit strength and maximum efficiency.

Extra mechanical strength is provided by diamond pattern, epoxy-coated paper insulation, used throughout the coil, with additional epoxy at heavy stress points. The diamond pattern distribution of the epoxy and carefully arranged ducts, provide a network of passages through which cooling fluid can freely circulate.

Coil assemblies are heat-cured under calculated hydraulic pressure to ensure performance against short-circuit forces.

Core and coil assemblies

Pad-mounted transformer core and coil assemblies are braced with heavy steel ends to prevent the rectangular coil from distorting under short-circuit conditions. Plates are clamped in place using presses, and welded or bolted to form a solid core and coil assembly. Core and coil assemblies exceed ANSI® and IEEE® requirements for short-circuit performance. Due to the rigidity of the design, impedance shift after short-circuit is comparable to that of circular wound assemblies.

Tanks

Transformer tanks are designed for high strength and ease of handling, installation, and maintenance. Tanks are welded using precision-cut, hot rolled, pickled and oiled steel. They are sealed to protect the insulating fluid and other internal components.

Transformer tanks are pressure-tested to withstand 7 psig without permanent distortion and 15 psig without rupture.

Tank finish

An advanced multi-stage finishing process exceeds the IEEE Std C57.12.28™-2005 standard. The eight-stage pre-treatment process assures coating adhesion and retards corrosion. It converts tank surfaces to a nonmetallic, water insoluble iron phosphate coating.

The paint method consists of two distinct layers of paint. The first is an epoxy primer (E-coat) layer which provides a barrier against moisture, salt and corrosives. The two-component urethane final coat seals and adds ultraviolet protection.

Vacuum processing

Transformers are dried and filled with filtered insulating fluid under vacuum, while secondary windings are energized. Coils are heated to drive out moisture, ensuring maximum penetration of fluid into the coil insulation system.

Insulating fluid

Transformers from Eaton's Cooper Power Systems are available with Envirotemp™ FR3™ fluid. The highly refined fluids are tested and degassed to assure a chemically inert product with minimal acid ions. Special additives minimize oxygen absorption and inhibit oxidation. To ensure high dielectric strength, the fluid is re-tested for dryness and dielectric strength, refiltered, heated, dried, and stored under vacuum before being added to the completed transformer.

Eaton's Cooper Power Systems transformers filled with Envirotemp™ FR3™ fluid enjoy unique fire safety, environmental, electrical, and chemical advantages, including insulation life extending properties.

A bio-based, sustainable, natural ester dielectric coolant, Envirotemp™ FR3™ fluid quickly and thoroughly biodegrades in the environment and is non-toxic per acute aquatic and oral toxicity tests.

Building for Environmental and Economic Sustainability (BEES) total life cycle assessment software, utilized by the US Dept. of Commerce, reports its overall environmental performance impact score at 1/4th that reported for mineral oil. Envirotemp™ FR3™ fluid has also earned the EPA Environmental Technology Verification of transformer materials.

With a fire point of 360 °C, Envirotemp™ FR3™ fluid is FM Approved® and Underwriters Laboratories (UL®) Classified "Less-Flammable" per NEC® Article 450-23, fitting the definition of a Listed Product per NEC®.

FM APPROVED

c UL US LISTED

Special application transformers

Data center transformer

With focus rapidly shifting from simply maximizing uptime and supporting demand to improving energy utilization, the data center industry is continually looking for methods to increase its energy efficiency and reliability. Utilizing cutting edge technology, Eaton's Cooper Power Systems Envirotran™ Hardened Data Center (HDC) transformers are the solution. Designed with special attention given to surge protection, HDC liquid-filled transformers provide superior performance under the harshest electrical environments. Contrary to traditional dry-type units, HDC transformers provide unsurpassed reliability, overloadability, operational life, efficiency, thermal loading and installed footprint. These Eaton's Cooper Power Systems units have reliably served more than 100 MW of critical data center capacity for a total of more than 6,000,000 hours without an hour of downtime caused by a thermal or short-circuit coil failure.

The top priority in data center operations is uninterrupted service. Envirotran HDC transformers from Eaton's Cooper Power Systems, having substantially higher levels of insulation, are less susceptible to voltage surges. Eaton's Cooper Power Systems has experienced zero failures due to switching transients. The ANSI® and IEEE® standard impulse withstand ratings are higher for liquid-filled transformers, making them less susceptible to insulation failure. The Envirotran HDC transformer provides ultimate protection by increasing the BIL rating one level higher than standard liquid-filled transformer ratings. The cooling system of liquid-filled transformers provides better protection from severe overloads—overloads that

can lead to significant loss of life or failure.

Data center design typically includes multiple layers of redundancy, ensuring maximum uptime for the critical IT load. When best in class transformer manufacturing lead times are typically weeks, not days, an unexpected transformer failure will adversely affect the facility's reliability and profitability. Therefore, the ability to determine the electrical and mechanical health of a transformer can reduce the probability of costly, unplanned downtime. Routine diagnostic tests, including key fluid properties and dissolved gas analysis (DGA), can help determine the health of a liquid-filled transformer. Although sampling is not required for safe operation, it will provide the user with valuable information, leading to scheduled repair or replacement, and minimizing the duration and expense of an outage. With a dry-type transformer, there is no reliable way to measure the health or likelihood of an impending failure.

Solar transformer

As a result of the increasing number of states that are adopting aggressive Renewable & Alternative Energy Portfolio Standards, the solar energy market is growing—nearly doubling year over year. Eaton's Cooper Power Systems, a key innovator and supplier in this expanding market, is proud to offer Envirotran transformers specifically designed for Solar Photovoltaic medium-voltage applications. Eaton's Cooper Power Systems is working with top solar photovoltaic developers, integrators and inverter manufacturers to evolve the industry and change the way we distribute power.

In accordance with this progressive stance, every Eaton's Cooper Power Systems Envirotran Solar transformer is filled with non-toxic, biodegradable Envirotemp™ FR3™ dielectric fluid, made from renewable seed oils. On top of its biodegradability, Envirotemp™ FR3™ fluid substantially extends the life of the transformer insulation, saving valuable resources. What better way to distribute green power than to use a green transformer. In fact, delaying conversion to Envirotran transformers places the burden of today's environmental issues onto tomorrow's generations. Eaton's Cooper Power Systems can help you create a customized transformer, based on site specific characteristics including: temperature profile, site altitude, solar profile and required system life. Some of the benefits gained from this custom rating include:

- Reduction in core losses
- Improved payback on investment
- Reduction in footprint
- Improved fire safety
- Reduced environmental impact

For the solar photovoltaic industry, Eaton's Cooper Power Systems is offering standard step up transformers and dual secondary designs, including 4-winding, 3-winding (Low-High-Low) and 3-winding (Low-Low-High) designs.

Wind transformer

Eaton's Cooper Power Systems is offering custom designs for renewable energy power generation. Eaton's Cooper Power Systems manufactures Generator Step-Up (GSU) transformers for installation at the base of every wind turbine. Additionally, grounding transformers are available for wind power generation.

DOE efficiency

The United States Department of Energy (DOE) has mandated efficiency values for most liquid type, medium voltage transformers. As a result, all applicable Eaton's Cooper Power Systems transformers are designed to meet or exceed the standard efficiency values per DOE 2010; Final Ruling, 10 CFR Part 431.

K-Factor transformer

With a drastic increase in the use of ferromagnetic devices, arcing devices, and electric power converters, higher frequency loads have increased significantly. This harmonic loading has the potential to generate higher heat levels within a transformer's windings and leads by as much as 300%. Harmonic loading has the potential to induce premature failure in standard-design distribution transformers.

In addition to standard UL® "K-Factor" ratings, transformers can be designed to customer-provided specifications detailing precise loading scenarios. Onsite measurements of magnitude and frequency, alongside harmonic analysis of the connected load can be performed by Eaton's Cooper Power Systems engineers or a third party consultant. These field measurements are used to determine exact customer needs and outline the transformer specifications.

Eaton's Cooper Power Systems will design harmonic-resistant transformers that will be subjected to the unique harmonic loads. These units are designed to maintain normal temperature rise under harmonic, full-load conditions. Standard UL® "K-Factor" designs can result in unnecessary costs when the "next-highest" K-Factor must be selected for a calculated design factor. To save the customer these unnecessary costs, Eaton's Cooper Power Systems can design the transformer to the specific harmonic spectrum used in the application. K-factor transformers from Eaton's Cooper Power Systems are filled with mineral oil or Envirotemp™ FR3™ fluid and enjoy the added benefits of dielectric cooling such as higher efficiencies than dry-type transformers.

Modulation transformer

Bundled with an Outboard Modulation Unit (OMU) and a Control and Receiving Unit (CRU), a Modulation Transformer Unit (MTU) is designed to remotely achieve two way communication.

The use of an MTU reduces travel time and expense versus traditional meter reading performed by high voltage electricians. Additionally, with MTU it is possible to manage and evaluate energy consumption data, providing reduced metering costs and fewer tenant complaints.

An MTU utilizes existing utility infrastructure, therefore eliminating the need to engineer and construct a dedicated communication network.

Figure 8. Modular transformer.

Inverter/rectifier bridge

Eaton's Cooper Power Systems complements its range of applications for transformers by offering dual winding designs. These designs are intended for connection to 12-pulse rectifier bridges.

Product attributes

To set us apart from other transformer manufactures, Eaton's Cooper Power Systems includes the following guarantees with every three-phase pad-mounted transformer.

Engineered to order (ETO)

Providing the customer with a well developed, cost-effective solution is the number one priority at Eaton's Cooper Power Systems. Using customer specifications, Eaton's Cooper Power Systems will work with the customer from the beginning to the end to develop a solution to fit their needs. Whether it is application specific, site specific, or a uniquely specified unit, Eaton's Cooper Power Systems will provide transformers with the best in class value and performance, saving the customer time and money.

Made in the U.S.A.

Eaton's Cooper Power Systems three-phase pad-mounted transformers are produced right here in the United States of America. Our manufacturing facilities are positioned strategically for rapid shipment of products. Furthermore, should the need arise, Eaton's Cooper Power Systems has a broad network of authorized service repair shops throughout the United States.

Superior paint performance

Protecting transformers from nature's elements worldwide, Eaton's Cooper Power Systems E-coat system provides unrivaled transformer paint life, and exceeds IEEE Std C57.12.28™-2005 and IEEE C57.12.29™-2005 standards. In addition to the outside of the unit, each transformer receives a gray E-coat covering in the interior of the tank and cabinet, providing superior rust resistance and greater visibility during service.

If the wide range of standard paint selections does not suit the customer's needs, Eaton's Cooper Power Systems will customize the paint color to meet their requirements.

Rectangular coil design

Eaton's Cooper Power Systems utilizes a rectangular coil design. This winding technique results in a smaller overall unit footprint as well as reducing the transformer weight. The smaller unit size does not hinder the transformer performance in the least. Units have proven short circuit withstand capabilities up to 12 MVA.

Testing

Eaton's Cooper Power Systems performs routing testing on each transformer manufactured including the following tests:

- **Insulation Power Factor:** This test verifies that vacuum processing has thoroughly dried the insulation system to required limits.
- **Ratio, Polarity, and Phase Relation:** Assures correct winding ratios and tap voltages; checks insulation of HV and LV circuits. Checks entire insulation system to verify all live-to-ground clearances.
- **Resistance:** This test verifies the integrity of internal high-voltage and low-voltage connections; provides data for loss upgrade calculations.
- **Applied Potential:** Applied to both high-voltage and low-voltage windings, this test stresses the entire insulation system to verify all live-to-ground clearances.
- **Induced Potential:** 3.46 times normal plus 1000 volts for reduced neutral designs.
- **Loss Test:** These design verification tests are conducted to assure that guaranteed loss values are met and that test values are within design tolerances. Tests include no-load loss and excitation current along with impedance voltage and load loss.
- **Leak Test:** Pressurizing the tank to 7 psig assures a complete seal, with no weld or gasket leaks, to eliminate the possibility of moisture infiltration or fluid oxidation.

Design performance tests

The design performance tests include the following:

- **Temperature Rise:** Our automated heat run facility ensures that any design changes meet ANSI® and IEEE® temperature rise criteria.
- **Audible Sound Level:** Ensures compliance with NEMA® requirements.
- **Lightning Impulse:** To assure superior dielectric performance, this test consists of one reduced wave, two chopped waves and one full wave in sequence, precisely simulating the harshest conditions.

Thomas A Edison Research and Test Facility

We are constantly striving to introduce new innovations to the transformer industry, bringing you the highest quality transformer for the lowest cost. Eaton's Cooper Power Systems Transformer Products are ISO 9001 compliant, emphasizing process improvement in all phases of design, manufacture, and testing. We have invested millions of dollars in the Thomas A. Edison Technical Center, our premier research facility in Franksville, Wisconsin affirming our dedication to introducing new innovations and technologies to the transformer industry. Headquarters for the Systems Engineering group of Eaton's Cooper Power Systems, this research facility is fully available for use by our customers to utilize our advanced electrical and chemical testing labs.

Eaton
1000 Eaton Boulevard
Cleveland, OH 44122
United States
Eaton.com

Eaton's Cooper Power Systems Business
2300 Badger Drive
Waukesha, WI 53188
United States
Cooperpower.com

© 2013 Eaton
All Rights Reserved
Printed in USA
Publication No. 210-80
August 2013

Eaton, Cooper Power Systems, PEAK, MagneX, and Envirotran are valuable trademarks of Eaton in the U.S. and other countries. You are not permitted to use these trademarks without the prior written consent of Eaton.
IEEE Std C57.12.28™-2005, IEEE Std C57.12.29™-2005, IEEE Std C57.91™-2011, and IEEE Std C57.154™-2012 standards are trademarks of the Institute of Electrical and Electronics Engineers, Inc., (IEEE). This publication is not endorsed or approved by the IEEE.
IEEE® is a registered trademark of the Institute of Electrical and Electronics Engineers, Inc.
ANSI® is a registered trademark of American National Standards Institute.
National Electrical Code® and NEC® are registered trademarks of the National Fire Protection Association, Inc., Quincy, MA.
FM Approved® is a trademark of FM Global.
NEMA® is a registered trademark of the National Electrical Manufacturers Association.
Envirotemp™ and FR3™ are licensed trademarks of Cargill, Incorporated.

Powering Business Worldwide

H-28

Lotycz, Matt

From: Eckel, Caroline H.
Sent: Friday, December 12, 2014 2:44 PM
To: Lotycz, Matt
Subject: RE: California Remediation Project - Arcadis

The preliminary drawing shows the whole package pump station that we will be using on site. Pumps and panel and bladder tank are all enclosed together. The bladder tank is item 4 on the key, 158 gallons. It will go on the utility pad, along with the water supply tanks. Do you have that layout of the pad?

From: Lotycz, Matt
Sent: Friday, December 12, 2014 2:38 PM
To: Eckel, Caroline H.
Subject: RE: California Remediation Project - Arcadis

Caroline - Not sure what all this is. Do we have other stuff on the Utility pad from this cutsheet you gave me, or just the bladder tank. If just the bladder tank from this info, please email a cutsheet just on the bladder tank. Thanks.

If it is easier to call me, feel free.

Matt

From: Eckel, Caroline H.
Sent: Friday, December 12, 2014 2:33 PM
To: Lotycz, Matt
Subject: FW: California Remediation Project - Arcadis

This is what we have on the water system.

The pressure range is going to change to 50-70.

We haven't gotten the revision for this yet.

If this isn't enough on the bladder tank, I will request a specific cut sheet on it.

I think it will be part of the "package".

From: David Sabatka [mailto:djs-sda@sbcglobal.net]
Sent: Thursday, December 11, 2014 12:00 PM
To: Eckel, Caroline H.
Subject: Fw: California Remediation Project - Arcadis

Caroline:

Take a look at this package system that may be close to what you might consider for your project. We could make some slight modifications, such as utilizing an air conditioning unit or proper ventilation in lieu of the heating unit shown. Let me know what you think and then we can proceed further with final details and some pricing.

Dave Sabatka, P.E.

Sabatka, Davis & Associates, Inc.

4620 Indianola Ave.
Columbus, OH 43215

p: 614-447-8989
c: 614-214-0795
email: djs-sda@sbcglobal.net

----- Forwarded Message -----
From: Craig Dickinson <cdickinson@pattersonpumps.com>
To: Dave Sabatka <djs-sda@sbcglobal.net>
Sent: Wednesday, December 3, 2014 3:08 PM
Subject: California Remediation Project - Arcadis

See attached drawing from a project that we built previously. It was constant speed and had standard check valves. As long as they don't mind the pressure swings between 40-60 PSI then this will work. If they want constant pressure, we will need to add either pressure reducing valves or variable speed drives. In this size, they would cost about the same.

Craig Dickinson
Flo-Pak Integrated Municipal Systems
Patterson Pump Company
Phone: (706) 297-2837
Email: cdickinson@pattersonpumps.com

Lotycz, Matt

From: Eckel, Caroline H.
Sent: Friday, December 12, 2014 2:33 PM
To: Lotycz, Matt
Subject: FW: California Remediation Project - Arcadis
Attachments: CR10-4.pdf; Preliminary Drawing.pdf

This is what we have on the water system.

The pressure range is going to change to 50-70.

We haven't gotten the revision for this yet.

If this isn't enough on the bladder tank, I will request a specific cut sheet on it.

I think it will be part of the "package".

From: David Sabatka [mailto:djs-sda@sbcglobal.net]
Sent: Thursday, December 11, 2014 12:00 PM
To: Eckel, Caroline H.
Subject: Fw: California Remediation Project - Arcadis

Caroline:

Take a look at this package system that may be close to what you might consider for your project. We could make some slight modifications, such as utilizing an air conditioning unit or proper ventilation in lieu of the heating unit shown. Let me know what you think and then we can proceed further with final details and some pricing.

Dave Sabatka, P.E.

Sabatka, Davis & Associates, Inc.
4620 Indianola Ave.
Columbus, OH 43215

p: 614-447-8989
c: 614-214-0795
email: djs-sda@sbcglobal.net

----- Forwarded Message -----
From: Craig Dickinson <cdickinson@pattersonpumps.com>
To: Dave Sabatka <djs-sda@sbcglobal.net>
Sent: Wednesday, December 3, 2014 3:08 PM
Subject: California Remediation Project - Arcadis

See attached drawing from a project that we built previously. It was constant speed and had standard check valves. As long as they don't mind the pressure swings between 40-60 PSI then this

will work. If they want constant pressure, we will need to add either pressure reducing valves or variable speed drives. In this size, they would cost about the same.

Craig Dickinson
Flo-Pak Integrated Municipal Systems
Patterson Pump Company
Phone: (706) 297-2837
Email: cdickinson@pattersonpumps.com

Lotycz, Matt

From: Eckel, Caroline H.
Sent: Friday, December 12, 2014 4:16 PM
To: Lotycz, Matt
Subject: Pump enclosure

FYI - Jon asked about eliminating the enclosure and changing the footprint to 5'x9', I don't think that will be a problem. Although I forwarded the question on to the manufacturer.

Caroline Eckel, PE | Engineer | caroline.eckel@arcadis-us.com

ARCADIS U.S., Inc. | One SeaGate, Suite 700 | Toledo, Ohio 43604
M: 419 392 1479 | T: 419 213 1615 | F: 419 473 2108
www.arcadis-us.com

ARCADIS, Imagine the result

Please consider the environment before printing this email.

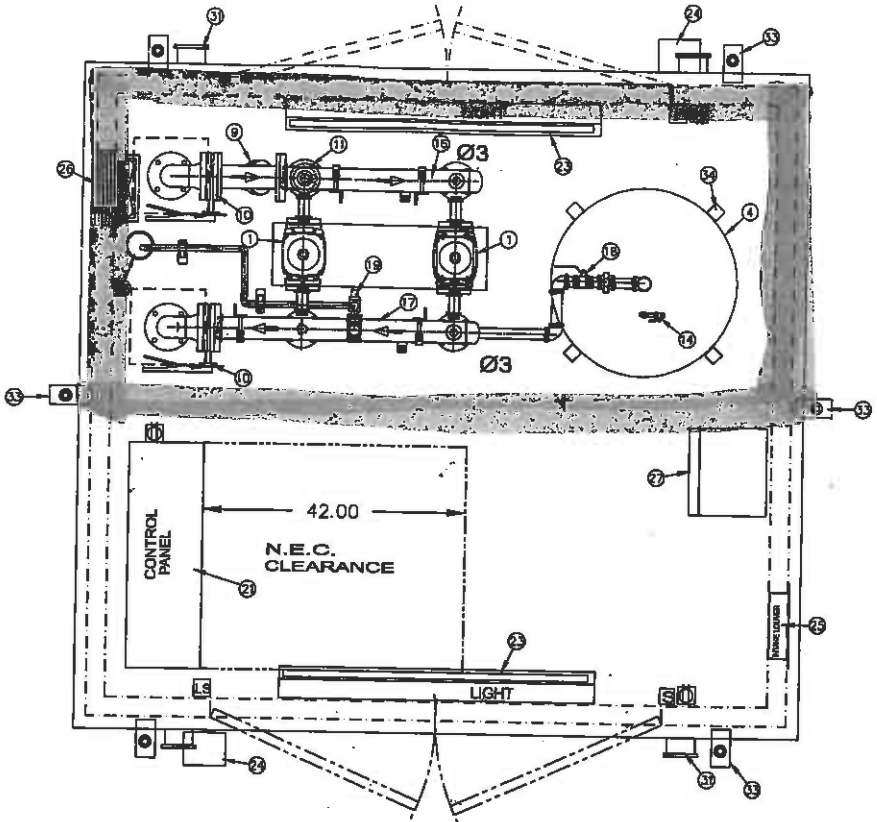

PLAN ELEVATION

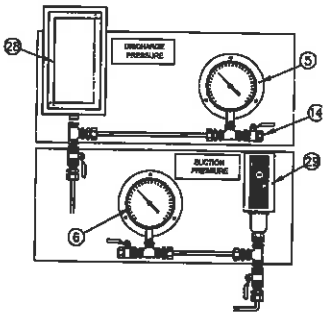

PRESSURE GAUGE DETAIL

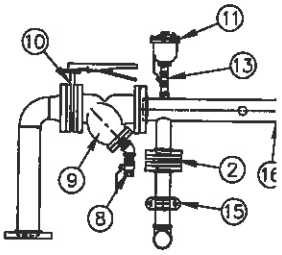

SUCTION HEADER DE

$$\frac{3\frac{10.25}{16}}{112} = \frac{12.5/16}{x}$$

9'-4"

30.76" PER 1"
@ 1"=1'-0" SCALE

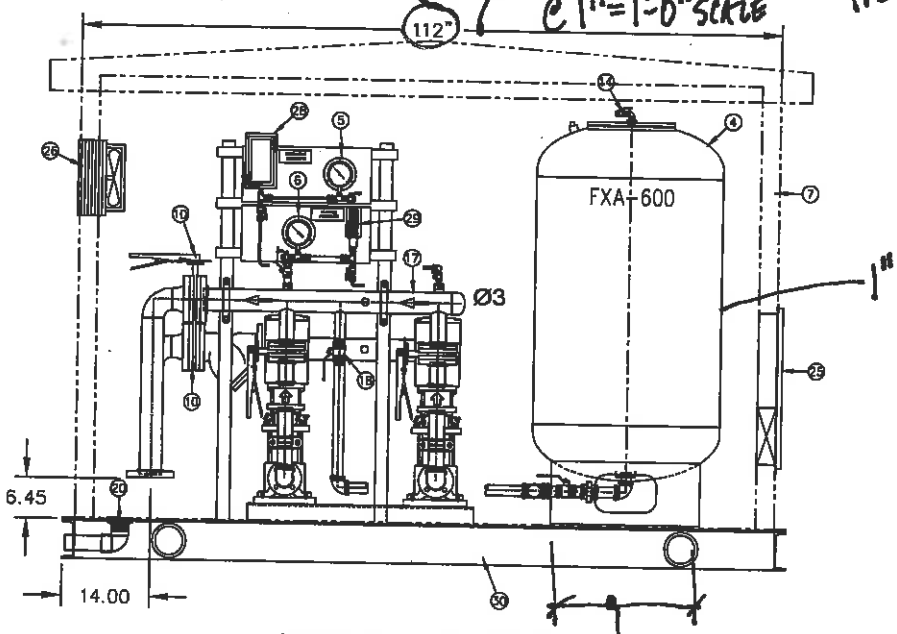

FRONT ELEVATION

CTRL PANEL NOT SHOWN FOR CLARITY

$\frac{12.5}{16}$

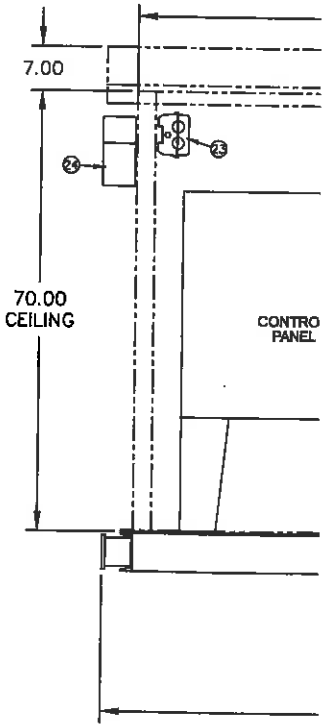

ARCADIS

SUBJECT: TOPOK - WORKSHOP BLDG

JOB NO:

BY: MSL DATE: 12/24/14

MSL 1/8/15

CHKD: DATE:

PAGE I-1

SHEET 1

WORKSHOP BLDG

- REF SHT I-2 FOR BUILDING PLAN & SECTION
- REF SHT I-3 FOR CBC 2013/IBC 2012 WIND & SEISMIC LOADS
- DEAD LOADS:
  - WALLS
    - WALL PANEL = 1.5 psf (24 GA METAL WALL PANEL)
    - LINER = 1.5 psf
    - INSULATION = 1 psf
    - GIRTS 10#/FT/5FT c/c = 2 psf

      TOTAL = 6 psf
  - ROOF
    - ROOF PANEL = 1.5 psf (24 GA STANDING SEAM ROOF PANEL)
    - LINER = 1.5 psf
    - INSULATION = 1 psf
    - PURLINS 10#/FT/4FT c/c = 2.5 psf
    - SOLAR PANEL = ~~10~~ 5 psf (B-12, 13 & 14)
    - COLLATERAL = 5 psf

      TOTAL = 16.5 psf ✓ — MAX

      TOTAL = 4 psf ✓ — MIN (NO SOLAR PANELS, NO LINER, 0.5 psf SS → METAL)
- REF SHT I-2A FOR BRIDGE CRANE INFO – 3 TON LIFTING LOAD = 6,000#
  - RUNWAY BEAMS = 100#/FT
  - BRIDGE/TROLLEY DEAD LOAD = 2570#
  - MAX WHEEL LOAD = 4,000# (×2 @ 5'-11" c/c)

    ↳ $\frac{(6{,}000\# \text{ LIFTING} \times 1.25)}{2 \text{ WHEELS}} + \left(\frac{490\# \text{ TROLLEY}}{2 \text{ WHEELS}}\right) + \frac{(2080\# \text{ BRIDGE})}{4 \text{ WHEELS}}$

    $= 4515\#$ ✓ OK

AGM Form 30 12-01

I-2

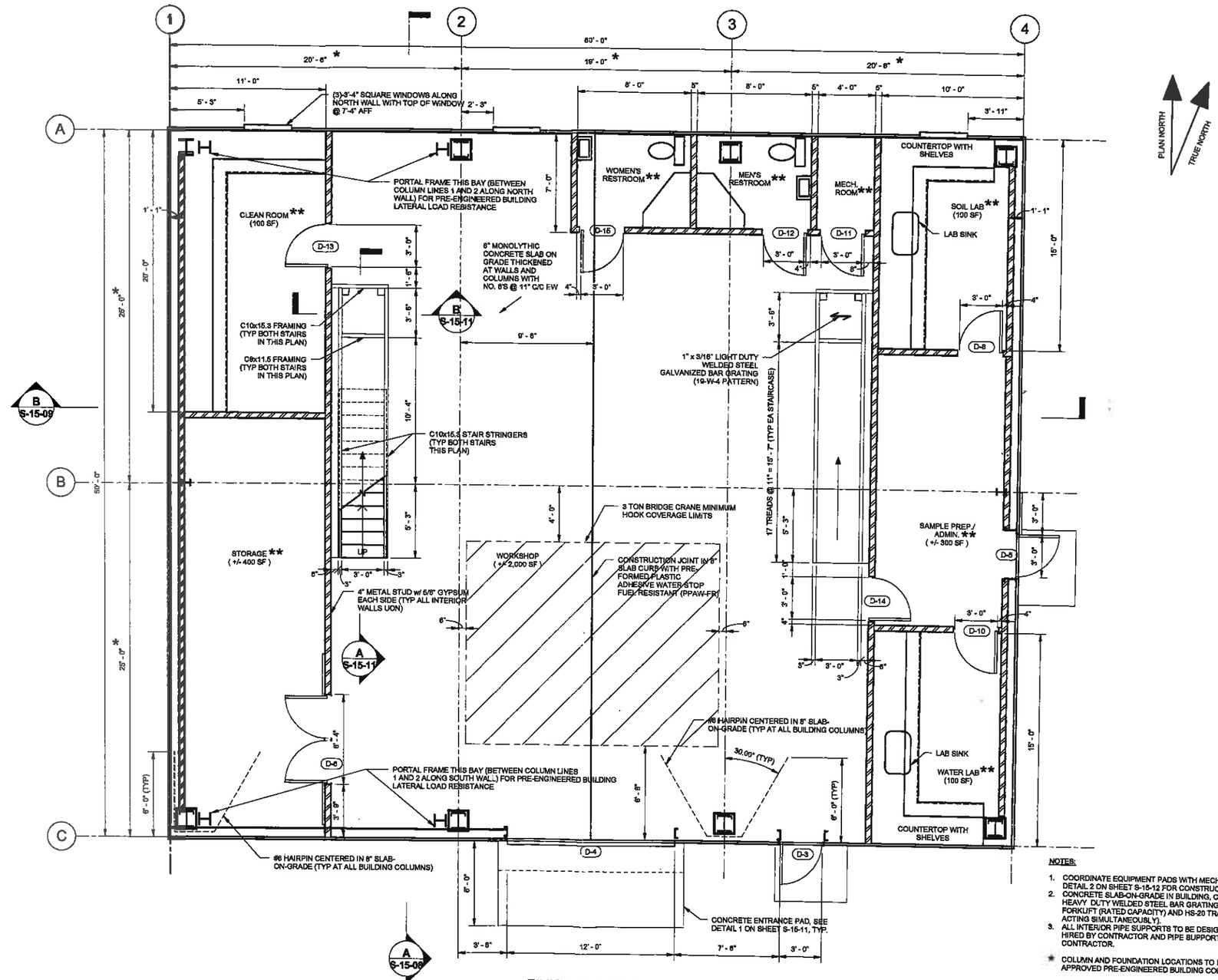

FINISH FLOOR PLAN
1/4" = 1'-0"

NOTES:

1. COORDINATE EQUIPMENT PADS WITH MECHANICAL DRAWINGS. SEE DETAIL 2 ON SHEET S-15-12 FOR CONSTRUCTION REQUIREMENTS.
2. CONCRETE SLAB-ON-GRADE IN BUILDING, CONCRETE RAMPS, AND HEAVY DUTY WELDED STEEL BAR GRATING IS DESIGNED FOR 3 TON FORKLIFT (RATED CAPACITY) AND HS-20 TRAFFIC LOADS (LOADS NOT ACTING SIMULTANEOUSLY).
3. ALL INTERIOR PIPE SUPPORTS TO BE DESIGNED BY CALIFORNIA P.E. HIRED BY CONTRACTOR AND PIPE SUPPORTS TO BE PORVIDED BY CONTRACTOR.

* COLUMN AND FOUNDATION LOCATIONS TO BE VERIFIED PER APPROVED PRE-ENGINEERED BUILDING COLUMN LOCATIONS.

** 1/2" PLYWOOD SHEATHING FASTENED TO TOP OF METAL ROOF DECK (1.5B DECK 22 GA) w/ 6" METAL STUD JOISTS AT 16" C/C (TYP ALL INTERIOR ROOMS) (MAX LIVE LOAD RATING = 50 PSF)

- DRAFT -
NOT FOR CONSTRUCTION

ARCADIS

No.	Date	DESCRIPTION	GM/SPEC	DWN	CHKD	SUPV	APVD BY
0	12/30/14	SUPPLEMENTAL PRE-FINAL (90%) DESIGN SUBMITTAL		CMW	MSL	JB	RAK

REVISIONS

APPROVED BY: SO
SUPV: JB
DSGN: MSL
DWN: CMW
CHKD: MSL
OK: RAK
DATE: 12/30/14
SCALES: NONE or AS SHOWN

TOPOCK GROUNDWATER REMEDIATION PROJECT
WORKSHOP BUILDING FINISH FLOOR PLAN
GAS TRANSMISSION & DISTRIBUTION
PACIFIC GAS AND ELECTRIC COMPANY
SAN FRANCISCO, CALIFORNIA

MICROFILM
BILL OF MATL.
DWG LIST
SUPSDS
SUPSD BY
SHEET NO. S-15-06 of SHEETS
REV

12/22/2014 3:40:35 PM

PHOTOVOLTAIC (PV) SOLAR PANEL NOTES:

1. PV SOLAR PANEL UNITS ARE TO BE PROVIDED ON TOP OF THE METAL ROOF DECK OF THE WORKSHOP BUILDING. THE PV SOLAR PANEL UNIT MANUFACTURER IS RESPONSIBLE FOR THE FOLLOWING:
   A. THE PV SOLAR PANEL UNIT MANUFACTURER IS RESPONSIBLE FOR PROVIDING AND DESIGNING ALL ITEMS (PV SOLAR PANELS/PANEL SUPPORT FRAMING/ROOF CLIPS (ATTACHING TO METAL ROOF DECK)/HARDWARE/ ETC.). THIS INCLUDES THE STRUCTURAL FRAMING AND HARDWARE ATTACHING TO THE BACK OF THE PV SOLAR PANELS AND SPANNING TO EACH ROOF CLIP (ATTACHING TO METAL ROOF DECK), THE CONNECTION OF THE PV SOLAR PANEL UNIT FRAMING TO THE ROOF CLIP (ATTACHING TO METAL ROOF DECK), AND THE ROOF CLIP AND ITS BOLTED/WELDED CONNECTION TO THE METAL DECK ROOF ITSELF.
   B. THE PV SOLAR PANEL UNIT MANUFACTURER MUST PROVIDE THE FOLLOWING:
      1. SUBMIT P.E. (REGISTERED IN THE STATE OF CALIFORNIA) SIGNED AND SEALED DETAILS/DESIGN CALCULATIONS/DESIGN LOADS/ (DEAD/LIVE/SEISMIC/WIND LOADS) ACTING ON THE PV SOLAR PANEL UNITS, PANEL SUPPORT FRAMING, ROOF CLIPS AND ITS BOLTED/WELDED CONNECTION TO THE METAL ROOF DECK, AND HARDWARE.

* COLUMN AND FOUNDATION LOCATIONS TO BE VERIED PER APPROVED PRE-ENGINEERED BUILDING COLUMN LOCATIONS.

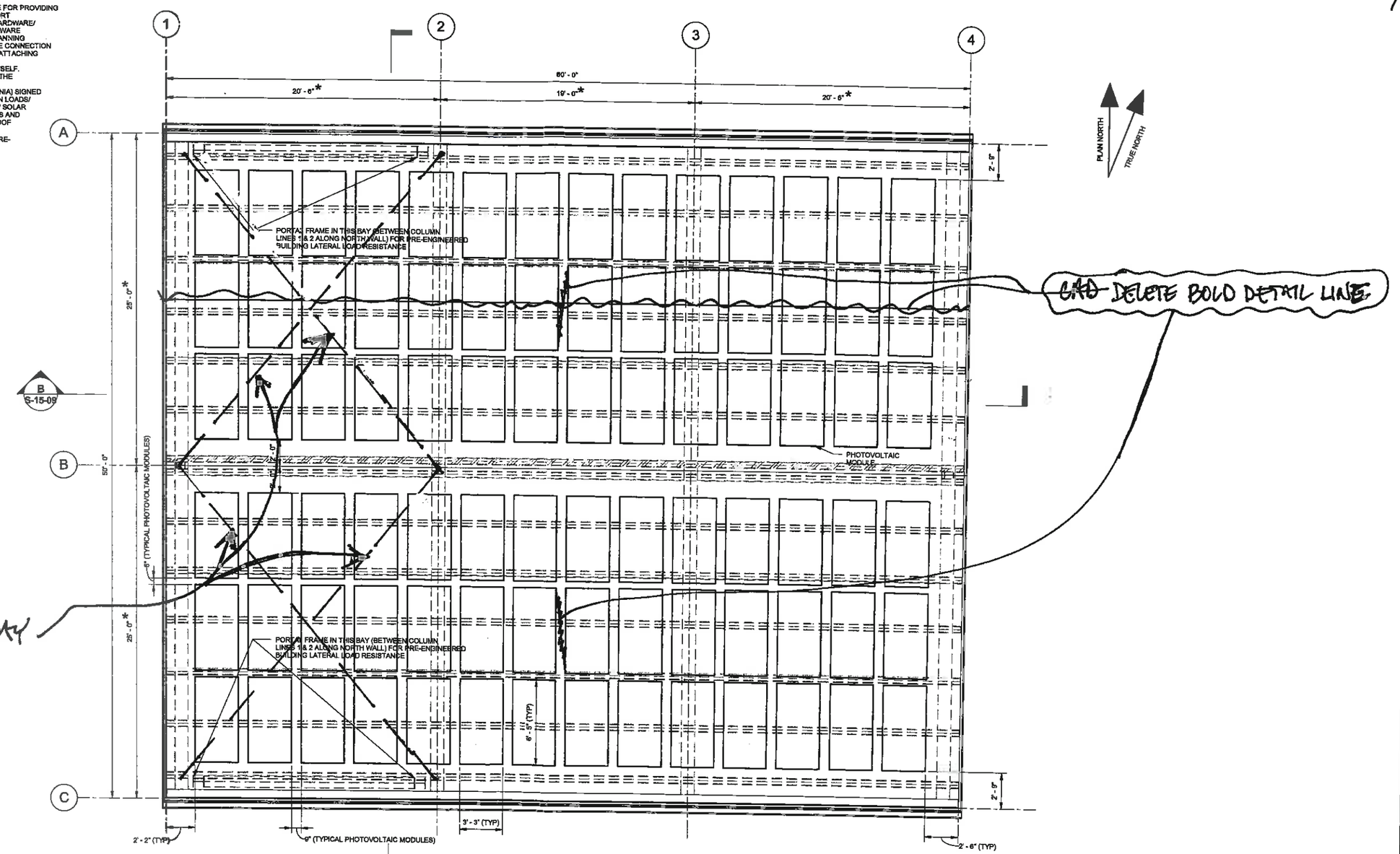

ROOF PLAN
1/4" = 1'-0"

NOTES:

1. NORTH SIDE PHOTOVOLTAICS MOUNTED AT 10 DEGREE TILT TOWARD SOUTH.

- DRAFT -
NOT FOR CONSTRUCTION

ARCADIS

No.	Date	DESCRIPTION	GM/SPEC	DWN	CHKD	SUPV	APVD BY
0	12/30/14	SUPPLEMENTAL PRE-FINAL (90%) DESIGN SUBMITTAL		CMW	MSL	JB	RAK

REVISIONS

APPROVED BY: SO
SUPV: JB
DSGN: MSL
DWN: CMW
CHKD: MSL
OK: RAK
DATE: 12/30/14
SCALES: NONE or AS SHOWN

TOPOCK GROUNDWATER REMEDIATION PROJECT

WORKSHOP BUILDING ROOF PLAN

GAS TRANSMISSION & DISTRIBUTION
PACIFIC GAS AND ELECTRIC COMPANY
SAN FRANCISCO, CALIFORNIA

MICROFILM
BILL OF MATL
DWG LIST
SUPSDS
SUPSD BY
SHEET NO. S-15-07 of SHEETS
REV

12/22/2014 3:40:35 PM
C:\Users\cmercado\Documents\Topock Workshop Building_Structural_cmercado.rvt

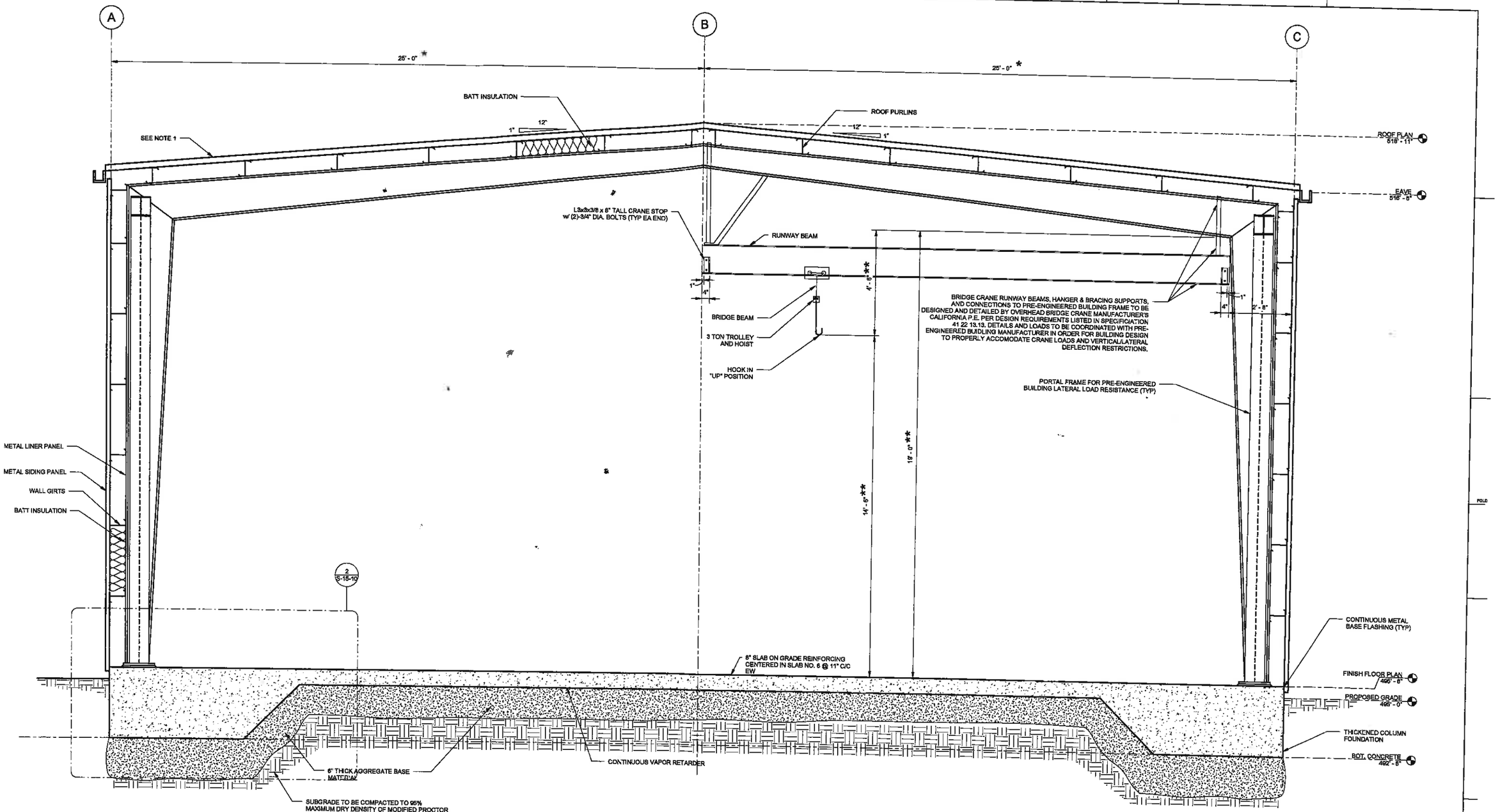

A TYPICAL FRAME

1/2" = 1'-0"

NOTES:

1. PHOTOVOLTAIC MODULES NOT SHOW FOR CLARITY.

* COLUMN AND FOUNDATION LOCATIONS TO BE VERIFIED PER APPROVED PRE-EINGEERED BUILDING COLUMN LOCATIONS.

** HEIGHT FROM TOP OF FLOOR TO BOTTOM OF FRAME RAFTER BEAM TO BE VERIFIED TO ACHIEVE MINIMUM 14'-6" HOOK CLEARANCE HEIGHT FROM FLOOR

- DRAFT - NOT FOR CONSTRUCTION

ARCADIS

No.	Date	DESCRIPTION	GM/SPEC	DWN	CHKD	SUPV	APVD BY
0	12/30/14	SUPPLEMENTAL PRE-FINAL (90%) DESIGN SUBMITTAL		CMW	MSL	JB	RAK

REVISIONS

APPROVED BY: SO

SUPV	JB
DSGN	MSL
DWN	CMW
CHKD	MSL
OK	RAK
DATE	12/30/14
SCALES	NONE or AS SHOWN

TOPOCK GROUNDWATER REMEDIATION PROJECT

WORKSHOP BUILDING
SECTION-TYPICAL FRAME

GAS TRANSMISSION & DISTRIBUTION
PACIFIC GAS AND ELECTRIC COMPANY
SAN FRANCISCO, CALIFORNIA

MICROFILM
BILL OF MATL
DWG LIST
SUPSDS
SUPSD BY
SHEET NO. S-15-08 of SHEETS
REV

12/22/2014 8:49:38 PM
C:\Users\cmwalsh\Documents\Topock Workshop Building_Structural_ownsata.rvt

I-2A

Lotycz, Matt

From: Dan Yeakey <dyeakey@dearborncrane.com>
Sent: Friday, November 14, 2014 10:32 AM
To: Lotycz, Matt
Subject: Crane quote 171881
Attachments: 171881-Crane Quote.pdf; Drawing.pdf

Matt

Please review the attached quote and crane drawings. We look forward to the opportunity to discuss this project with you. Please contact me with questions or comments.
Sincerely,
Dan Yeakey
Dearborn Overhead Crane
P: 574-208-6864
F: 574-208-6864
Visit us at:
www.DearbornCrane.com
OVER 60 YEARS OF LIFTING EXPECTATIONS!
https://plus.google.com/102203654753437148752/about?gl=US&hl=en-US

This e-mail transmission contains information that is confidential and may be privileged. It is intended only for the addressee(s)named above. If you receive this e-mail in error, please do not read, copy or disseminate it in any manner. If you are not the intended recipient, any disclosure, copying, distribution or use of the contents of this information is prohibited.
Please reply to the message immediately by informing the sender that the message was misdirected. After replying, please erase it from your computer system. Your assistance in correcting this error is appreciated.

www.DearbornCrane.com

DEARBORN OVERHEAD CRANE

1133 East Fifth Street
Mishawaka, IN 46544
Phone 1-574-259-2444
24 Hours 1-800-272-6358

*** Cover Sheet ***

To: Matt Lotycz
Company: Arcadis
Email:

From: Dan Yeakey

Quote#: 171881

Date: 11/14/14
Pages (including this page): 6
Comments: Bridge Crane

Dearborn Overhead Crane
Since 1947

DESIGN SPECIFICATIONS

Material design and safety features, based on service classification, will conform to the following listed specifications and codes where applicable and appropriate:

Crane Manufacturers Association of America, Inc., CMAA 70-74, Latest Edition
American National Standard, B30.11-1980 "Underhung Cranes"
American National Standard, ANSI-B30.16 "Overhead Hoist"
Hoist Manufacturers Institute – Specification HMI 100-74
Manual of Steel Construction, Latest Edition
National Electrical Code – Latest Edition
Specification for Welding Industrial & Mill Cranes ANSI/AWS D 14.1 – 1997

www.DearbornCrane.com

DEARBORN OVERHEAD CRANE

1133 East Fifth Street
Mishawaka, IN 46544
Phone 1-574-259-2444
24 Hours 1-800-272-6358

11/14/14

Proposal No. 171881

ATTN: Matt Lotycz
Arcadis

Email:

SUBJECT: Bridge Crane

We first would like to thank you for the opportunity to provide a quote on this valued project. We are pleased to quote the following;

SCOPE

One 3 ton under running, single girder crane per attached specifications. Our quote includes all crane and hoist components, runways, 4 conductor runway electrification, engineering, fabrication, painting.

PRICING

Item Description	Material		
3 ton under running, single girder crane	17000		
Runways	2000		
4 Bar Runway Electrification System	500		
Totals:	**$19,500.00**		

- Add Remote Radio System $960 installed per crane
- Please add sales tax where applicable
- Freight not included

We hope the above information and enclosures are sufficient to answer any questions you might have regarding this equipment. Should there be any further questions please feel free to call. We would welcome the opportunity to further discuss our proposal with you.
DEARBORN has been a manufacturer of cranes since 1947. DEARBORN is the only regional crane manufacturer that not only builds cranes but also has a full time field service crew that repairs all brands of cranes. We also rebuild cranes as well as provide annual OSHA inspections.

Price quoted is subject to increase to cover any applicable sales or use tax which we are required by law to pay or collect as a result of this transaction. We reserve the right to correct any stenographic errors.
Terms: 35% down payment, 55% prior to delivery 10% net 30 (pending credit approval.)
Due to the volatile steel market, all quotations must be confirmed prior to acceptance of order.
Delivery: 6 weeks after receipt of signed approval drawings and Purchase Order
F.O.B.: Origin, Mishawaka, IN
Attached Bid Notes are an integral part of this proposal.
Quoted By: DJY

Ordered by:	
Total Amount:	
PO Number:	

Respectfully submitted,

Dan Yeakey

Dan Yeakey, DEARBORN CRANE & ENGINEERING CO.

www.DearbornCrane.com

DEARBORN OVERHEAD CRANE

1133 East Fifth Street
Mishawaka, IN 46544
Phone 1-574-259-2444
24 Hours 1-800-272-6358

Crane Specifications

Quote No: 171881
Customer: Arcadis
Attention: Matt Lotycz

Date: 11/14/14

Crane Data

Crane type	under running, single girder		**# of Cranes**	1
Capacity	3 Tons		**Operation**	Indoors
Span	20'- 0"		**Power**	460/3/60
Lift	14'- 2"		**Reeving**	2/1
Hoist	3 ton wire rope		**Control Encl.**	NEMA 12
Whl Load	4000 lbs.		**Crane Rating**	CMAA C
Br. Endtr.	5'- 10 7/8" wheel base		**Operation type**	Sliding P.B.
Configuration	single girder		**Control Voltage**	110V
Girder Type	standard wide-flange		**Cross Conductors**	Festooned
Walkway	N/A		**Paint**	Yellow
Standard items	2 speed hoist , Weight Watcher Load Cell, Trolley Brake, Trolley Bumpers, Hoist Geared Upper and Lower Limit, Bridge Travel Slow Down Limit Switch, Trolley VFD Control, Bridge VFD Control, Warning Horn, Hoist Inspection Test Record, Wire Rope Certification, Hook Forging Certificate			

Runway Data

Runway type	W14x43		**Runway Conductors**	4 bar Conductor system
Length	25'		**Runway Collectors**	Tandum Spring Shoe type
Supports	Bolted connection every 25' directly to building headers			

Electrical Data

Drive	Motor Type	Speed (FPM)	Brakes
Hoist	Crane Duty	20/3.3 two speed	DC Disc
Trolley	Crane Duty	65 variable	DC Disc
Bridge	Crane Duty	100 variable	DC Disc

www.DearbornCrane.com

DEARBORN OVERHEAD CRANE

1133 East Fifth Street
Mishawaka, IN 46544
Phone 1-574-259-2444
24 Hours 1-800-272-6358

Bid Notes

The following bid notes are included as an integral part of the quote. Variances and/or exceptions may affect the final price of this equipment.

- Dearborn installation is computed on a straight time basis. Installation requested to be done outside normal working hours may require overtime charges. Pricing also assumes all work is done in a continuous fashion with a single "Start up and Shut down". Additional charges may be incurred if Dearborn is required to pull off the job and restart later.
- Dearborn cannot accept responsibility for any existing support or building structures.
- Proper sizing, location, alignment to CMAA recommendations, and spacing of Runways, columns, support steel and/or ASCE rail is responsibility of others **where Dearborn does not supply these items.**
- Design and supply of material for any concrete work is *not* included unless otherwise called out in quotation.
- All material factory painted using manufacturers standard paint with field paint touch up, by Dearborn.
- Temporary electric power for lighting and welders by others. **Dearborn uses Gas welders as a standard**
- Removal of any obstruction in crane path, by others. **Exception only if agreed to in advance in writing with Dearborn**
- Disposal of leaded paint chips, asbestos, or any other hazardous material which may need to be removed during the crane installation will be the responsibility of the owner.
- Handling and storage of materials due to delays by customer may result in additional charges.
- A complete Operating & Maintenance manual with appropriate spare parts list is included.
- All installation prices assume a clear work area with concrete floors in place. Delays and/or extra time incurred by the field crews due to inaccessibility to work area will be billed at then current rates for men and equipment .**Exception only if agreed to in advance in writing with Dearborn** .
- Adequate headroom above the bridge crane must be available to allow the boom of the mobile crane to set the crane and hoist. **Exception only if agreed to in advance in writing with Dearborn** .
- A fused disconnect and power from source to the disconnect and from disconnect to conductor bar is by others. Current taps and connection at the conductor bar is provided by Dearborn.
- Any permits required, by others.
- Basic operator orientation, including one session of approximately ½ hour at time of installation, is included. A more comprehensive operator and OSHA training is available on request.
- "Testing" in the scope section refers to 'No Load' Testing which tests all functions of equipment. Full Load Testing with test weights is available as described on the Load Testing Policy page.
- Limitation of liability: seller shall have no liability to buyer with respect to the sale of products or provision of services hereunder for lost profits or for special, consequential, exemplary or incidental damages of any kind.
- Warranty: Dearborn Overhead Crane provides a full 10 year warranty on all structural components of the crane (and runway system where supplied by Dearborn Overhead Crane). All mechanical and electrical components (such as hoists, end trucks, electrification, attachments, etc.) are supplied with a limited ONE year warranty on material only. Warranty period begins on the date of crane commissioning and signed acceptance by the customer.

DEARBORN OVERHEAD CRANE
1133 East Fifth Street
Mishawaka, IN 46544
Phone 1-574-259-2444
24 Hours 1-800-272-6358

OPTIONAL EQUIPMENT AVAILABLE:

- **RADIO CONTROL**
- **ANTI-COLLISION FEATURE**
- **WARNING DEVICES**
- **CRANE LIGHTS**
- **ADJUSTABLE FREQUENCY DRIVES**
- **OUTDOOR APPLICATIONS**
- **WALKWAYS AND/OR SERVICE PLATFORMS**

  (Means to access the above option is not included, but available)
- **SPECIAL PAINT**
- **BELOW HOOK DEVICES (C-HOOKS, MAGNETS, SLINGS, ETC)**

DEARBORN will provide the right combination of PERFORMANCE, RELIABILITY and VALUE, all at the right price. We not only build and install the highest quality cranes; we also have a full time field service crew that repairs all brands of cranes. DEARBORN also provides annual service contracts for those customers who depend on their equipment for critical production needs or who want to be sure their equipment is always in top working order and OSHA inspections are being done in a timely fashion.

www.DearbornCrane.com

DEARBORN OVERHEAD CRANE

1133 East Fifth Street
Mishawaka, IN 46544
Phone 1-574-259-2444
24 Hours 1-800-272-6358

Load Testing Advisory

1) Current specifications regarding the load tests of Overhead Crane Systems

ANSI B30.11 requires the following;
11-2.2.2 Rated Load Test
(a) Prior to initial use, all new, extensively repaired, and altered equipment shall be tested and inspected by, or under the direction of, an appointed or authorized person, and a written report should be furnished by such person, confirming the load rating of the system. The load rating should no be more than 80% of the maximum load sustained during the test.

OSHA 1910.179 Paragraph K2 states the following;
Rated load test.
Test loads shall not be more than 125% of the rated load unless otherwise recommended by the manufacturer. The test reports ***shall*** be placed on file where readily available to appointed personnel.

2) Definitions

Hoist
A machinery unit that is used for lifting and lowering a load.
Crane
A bridging structure that spans two or more runways and provides traversing motion.
Runway
The rails, beams, brackets and framework on which the crane operates.

3) Dearborn Overhead Crane Load Testing Offer (Maximum crane capacity of 10ton)

It therefore is our opinion, that it is the owner's responsibility to load test the overhead bridge crane ***system***. The "system" consists of the hoist, crane, runways, columns and footings. To test the "system", requires that the full system be in place and therefore must occur after the completion of the crane installation. Although it is hoist industry practice to load test every hoist prior to shipping, this practice does not preclude the requirement for the full load testing upon commissioning of the full hoist, crane and runway system.

As a service to our customers, DOC offers to provide this load test free of charge to the purchaser of a Dearborn Crane. To take advantage of this **free** offer, **ALL** the following criteria is required.

1. Dearborn Must be contracted to install the crane and will perform this load test during the normal installation time period
2. The customer must provide a full capacity test load** to be used for testing purposes. This load must be 125% of the rated capacity of the crane.
3. The load must be of reliable weight, and be easily accessible and in the immediate area of the crane to be tested. The weight of the load should be certifiable. If certification of the load is not practical, DOC can provide a scale to weigh the load for a small fee.
4. All necessary rigging** must be provided by the customer.
5. The load and rigging must be provided while DOC is on site for the installation. (If the customer cannot provide the required materials during the normal installation period, but still would like to have a Certified Load Test performed, a crew can be provided on a time and material basis.)

Upon completion of the test, a temporary hand written certificate will be supplied to the owner, so that there is no possible exposure to the owner of not have proper documentation. The official Load Test Certificate to following within 2 weeks. Also, a copy will remain on file at Dearborn.

** Dearborn Overhead Crane is not responsible for any damage that may occur to either the test weights or the rigging used.

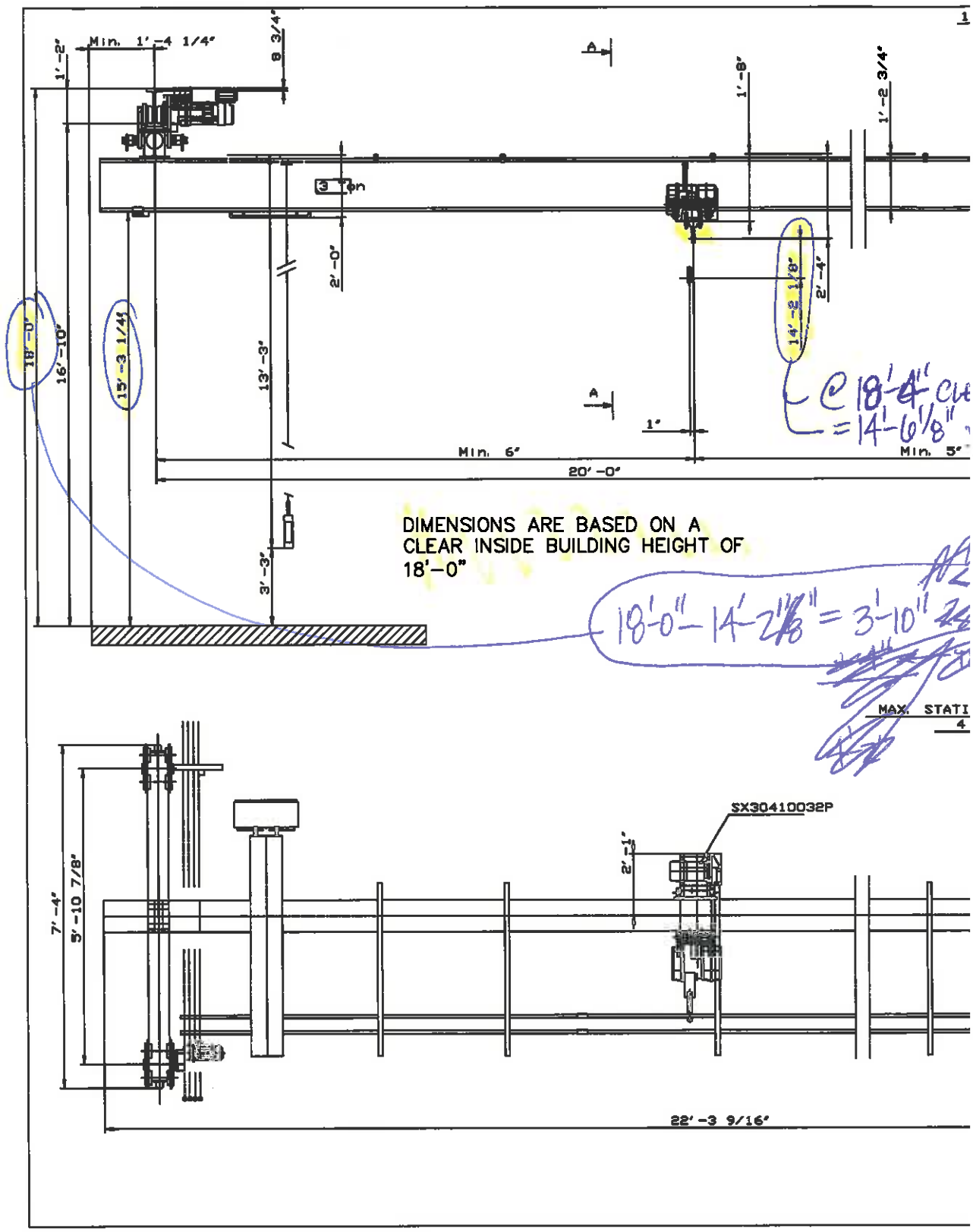
Min. 1'-4 1/4"
8 3/4"
1'-2"
18'-0"
16'-10"
15'-3 1/4"
13'-3"
2'-0"
3'-3"
1'-8"
1'-2 3/4"
14'-2 1/8"
2'-4"
1"
Min. 6"
20'-0"
Min. 5"
DIMENSIONS ARE BASED ON A
CLEAR INSIDE BUILDING HEIGHT OF
18'-0"
@ 18'-4" CLE
= 14'-6 1/8"
18'-0" - 14'-2 1/8" = 3'-10"
MAX. STATI
4
SX30410032P
2'-1"
7'-4"
5'-10 7/8"
22'-3 9/16"

STRUCTURAL CALCULATIONS

FOR

Topok

Needles, CA

Code Search

Code: International Building Code 2012

Occupancy:

Occupancy Group = U Utility & Miscellaneous

Risk Category & Importance Factors:

Risk Category = II ✓

Wind factor = 1.00
Snow factor = 1.00 ✓
Seismic factor = 1.00

Type of Construction:

Fire Rating:
Roof = 0.0 hr
Floor = 0.0 hr

Building Geometry:

Roof angle (θ)	1.00 / 12	4.8 deg ✓
Building length (L)	60.0 ft ✓	
Least width (B)	50.0 ft ✓	
Mean Roof Ht (h)	22.8 ft ✓	
Parapet ht above grd	0.0 ft	
Minimum parapet ht	0.0 ft	

Live Loads:

Roof
0 to 200 sf: 20 psf
200 to 600 sf: 24 - 0.02Area, but not less than 12 psf
over 600 sf: 12 psf

Floor:

Typical Floor	50 psf
Partitions	15 psf
Corridors above first floor	80 psf
Lobbies & first floor corridors	100 psf
Balconies (exterior)	50 psf

ARCADIS
1100 Superior Suite 1250
Cleveland, OH
Phone

JOB TITLE	Topok Worksop Building		
JOB NO.		SHEET NO.	
CALCULATED BY	MSL	DATE	12.24.14
CHECKED BY		DATE	

Wind Loads :

Ultimate Wind Speed	110 mph ✓
Directionality (Kd)	0.85 ✓
Exposure Category	C ✓
Enclosure Classif.	Partially Enclosed ✓
Internal pressure	+/-0.55 ✓
Kh case 1	0.927 ✓
Kh case 2	0.927
Type of roof	Gable

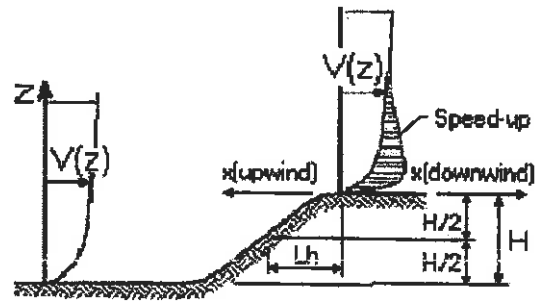

ESCARPMENT

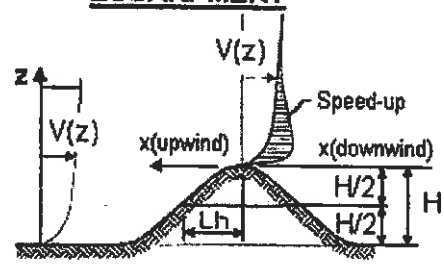

2D RIDGE or 3D AXISYMMETRICAL HILL

Topographic Factor (Kzt)

Topography		Flat
Hill Height	(H)	80.0 ft
Half Hill Length (Lh)		100.0 ft
Actual H/Lh	=	0.80
Use H/Lh	=	0.50
Modified Lh	=	160.0 ft
From top of crest: x =		50.0 ft
Bldg up/down wind?		downwind

H/Lh= 0.50	K_1 =	0.000
x/Lh = 0.31	K_2 =	0.792
z/Lh = 0.14	K_3 =	1.000
At Mean Roof Ht:		
	Kzt = $(1+K_1K_2K_3)$^2 =	1.00 ✓

Gust Effect Factor

h =	22.8 ft
B =	50.0 ft
/z (0.6h) =	15.0 ft

Flexible structure if natural frequency < 1 Hz (T > 1 second).
However, if building h/B < 4 then probably rigid structure (rule of thumb).
h/B = 0.46 Rigid structure

G = 0.85 Using rigid structure default ✓

Rigid Structure

ē =	0.20
ℓ =	500 ft
z_{min} =	15 ft
c =	0.20
g_Q, g_v =	3.4
L_z =	427.1 ft
Q =	0.91
I_z =	0.23
G =	0.88 use G = 0.85

Flexible or Dynamically Sensitive Structure

Natural Frequency (η_1) =	0.0 Hz				
Damping ratio (β) =	0				
/b =	0.65				
/α =	0.15				
Vz =	92.9				
N_1 =	0.00				
K_n =	0.000				
R_h =	28.282	η =	0.000	h =	22.8 ft
R_B =	28.282	η =	0.000		
R_L =	28.282	η =	0.000		
g_R =	0.000				
R =	0.000				
G =	0.000				

Enclosure Classification

Test for Enclosed Building: A building that does not qualify as open or partially enclosed.

Test for Open Building: All walls are at least 80% open.
Ao ≥ 0.8Ag

Test for Partially Enclosed Building:

	Input			Test	
Ao	166.0	sf	Ao ≥ 1.1Aoi	YES	
Ag	1275.0	sf	Ao > 4' or 0.01Ag	YES	
Aoi	77.5	sf	Aoi / Agi ≤ 0.20	YES	Building IS Partially Enclosed ✓
Agi	3400.0	sf			

Conditions to qualify as Partially Enclosed Building. Must satisfy all of the following:
Ao ≥ 1.1Aoi
Ao > smaller of 4' or 0.01 Ag
Aoi / Agi ≤ 0.20
Where:
Ao = the total area of openings in a wall that receives positive external pressure.
Ag = the gross area of that wall in which Ao is identified.
Aoi = the sum of the areas of openings in the building envelope (walls and roof) not including Ao.
Agi = the sum of the gross surface areas of the building envelope (walls and roof) not including Ag.

Reduction Factor for large volume partially enclosed buildings (Ri) :

If the partially enclosed building contains a single room that is unpartitioned , the internal pressure coefficient may be multiplied by the reduction factor Ri.

Total area of all wall & roof openings (Aog): 0 sf
Unpartitioned internal volume (Vi) : 0 cf
Ri = 1.00

Altitude adjustment to constant 0.00256 (caution - see code) :

Altitude = 0 feet
Constant = 0.00256
Average Air Density = 0.0765 lbm/ft^3

ARCADIS
1100 Superior Suite 1250
Cleveland, OH
Phone

JOB TITLE Topok
Worksop Building
JOB NO. SHEET NO.
CALCULATED BY MSL DATE 12.24.14
CHECKED BY DATE

IF HIGH BUT OK

Wind Loads - MWFRS all h (Enclosed/partially enclosed only)

Kh (case 2) =	0.93	h =	22.8 ft	GCpi =	+/-0.55
Base pressure (q_h) =	**24.4 psf**	ridge ht =	24.9 ft	G =	0.85
Roof Angle (θ) =	4.8 deg	L =	60.0 ft	z for qi :	22.8 ft
Roof tributary area - (h/2)*L:	684 sf	B =	50.0 ft	qi =	24.4 psf for positive internal pressures
(h/2)*B:	570 sf				

Ultimate Wind Surface Pressures (psf)

Surface	Wind Normal to Ridge B/L = 0.83 h/L = 0.46 Cp	q_hGC_p	w/+q_iGC_{pi}	w/-q_hGC_{pi}	Wind Parallel to Ridge L/B = 1.20 h/L = 0.38 Dist.*	Cp	q_hGC_p	w/ +q_iGC_{pi}	w/ -q_hGC_{pi}
Windward Wall (WW)	0.80	16.6	see table below			0.80	16.6	see table below	
Leeward Wall (LW)	-0.50	-10.4	-23.8	3.1		-0.46	-9.5	-23.0	3.9
Side Wall (SW)	-0.70	-14.5	-27.9	-1.1		-0.70	-14.5	-27.9	-1.1
Leeward Roof (LR)		**				included in windward roof			
Windward Roof: 0 to h/2*	-0.90	-18.7	-32.1	-5.2	0 to h/2*	-0.90	-18.7	-32.1	-5.2
h/2 to h*	-0.90	-18.7	-32.1	-5.2	h/2 to h*	-0.90	-18.7	-32.1	-5.2
h to 2h*	-0.50	-10.37	-23.80	3.05	h to 2h*	-0.50	-10.4	-23.8	3.1
> 2h*	-0.30	-6.22	-19.65	7.20	> 2h*	-0.30	-6.2	-19.7	7.2

**Roof angle < 10 degrees. Therefore, leeward roof is included in windward roof pressure zones.

*Horizontal distance from windward edge

Windward Wall Pressures at "z" (psf)

	z	Kz	Kzt	Windward Wall q_zGC_p	w/+q_iGC_{pi}	w/-q_hGC_{pi}	Combined WW + LW Normal to Ridge	Parallel to Ridge
	0 to 15'	0.85	1.00	15.2	1.8	28.6	25.6	24.7
	20.0 ft	0.90	1.00	16.1	2.7	29.6	26.5	25.7
h=	22.8 ft	0.93	1.00	16.6	3.2	30.0	27.0	26.1
ridge =	24.9 ft	0.94	1.00	16.9	3.5	30.3	27.3	26.5

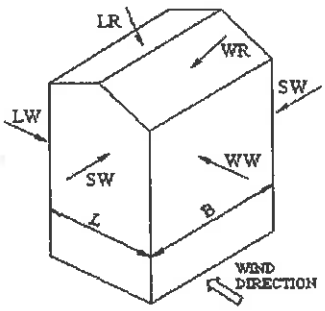

WIND NORMAL TO RIDGE

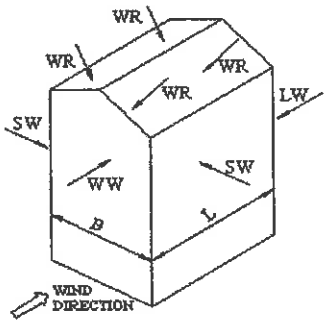

WIND PARALLEL TO RIDGE

NOTE:
See figure in ASCE7 for the application of full and partial loading of the above wind pressures. There are 4 different loading cases.

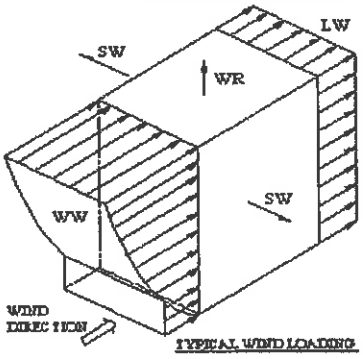

TYPICAL WIND LOADING

Parapet

z	Kz	Kzt	qp (psf)
0.0 ft	0.85	1.00	0.0

Windward parapet: 0.0 psf (GCpn = +1.5)
Leeward parapet: 0.0 psf (GCpn = -1.0)

Windward roof overhangs (add to windward roof pressure) : 16.6 psf (upward)

ARCADIS
1100 Superior Suite 1250
Cleveland, OH
Phone

JOB TITLE Topok
Worksop Building
JOB NO.
SHEET NO.
CALCULATED BY MSL
DATE 12.24.14
CHECKED BY
DATE

Wind Loads - MWFRS h≤60' (Low-rise Buildings) Enclosed/partially enclosed only

Kz = Kh (case 1) = 0.93
Base pressure (qh) = **24.4 psf** > 20 psf MIN PG&E DESIGN CRITERIA
GCpi = +/-0.55

Edge Strip (a) = 5.0 ft
End Zone (2a) = 10.0 ft
Zone 2 length = 25.0 ft

Wind Pressure Coefficients

Surface	CASE A GCpf	θ = 4.8 deg w/-GCpi	w/+GCpi	CASE B GCpf	w/-GCpi	w/+GCpi
1	0.40	0.95 ✓	-0.15	-0.45	0.10	-1.00
2	-0.69	-0.14 ✓	-1.24 ✓	-0.69	-0.14	-1.24
3	-0.37	0.18 ✓	-0.92 ✓	-0.37	0.18	-0.92
4	-0.29	0.26	-0.84 ✓	-0.45	0.10	-1.00
5	-0.45	0.10	-1.00	0.40	0.95	-0.15
6	-0.45	0.10	-1.00	-0.29	0.26	-0.84
1E	0.61	1.16	0.06	-0.48	0.07	-1.03
2E	-1.07	-0.52	-1.62	-1.07	-0.52	-1.62
3E	-0.53	0.02	-1.08	-0.53	0.02	-1.08
4E	-0.43	0.12	-0.98	-0.48	0.07	-1.03
5E				0.61	1.16	0.06
6E				-0.43	0.12	-0.98

Ultimate Wind Surface Pressures (psf)

1	23.2	-3.7		2.4	-24.4
2	-3.4	-30.3		-3.4	-30.3
3	4.4	-22.5		4.4	-22.5
4	6.3	-20.5		2.4	-24.4
5	2.4	-24.4		23.2	-3.7
6	2.4	-24.4		6.3	-20.5
1E	28.3	1.5		1.7	-25.1
2E	-12.7	-39.5		-12.7	-39.5
3E	0.5	-26.4		0.5	-26.4
4E	2.9	-23.9		1.7	-25.1
5E				28.3	1.5
6E				2.9	-23.9

19,125# INTERIOR FRAME TRIB CONTROLS

10,88# END FRAME TRIB AREA

Parapet

Windward parapet = 0.0 psf (GCpn = +1.5)
Leeward parapet = 0.0 psf (GCpn = -1.0)

Windward roof overhangs = 17.1 psf (upward) add to windward roof pressure

0.279K

16.8psf

Horizontal MWFRS Simple Diaphragm Pressures (psf)

Transverse direction (normal to L)

Interior Zone:	Wall	16.8 psf ✓
	Roof	-7.8 psf **
End Zone:	Wall	25.4 psf ✓
	Roof	-13.2 psf **

51.2% ↑ THAN INTERIOR

Longitudinal direction (parallel to L)

Interior Zone:	Wall	16.8 psf
End Zone:	Wall	25.4 psf

** NOTE: Total horiz force shall not be less than that determined by neglecting roof forces (except for MWFRS moment frames).

The code requires the MWFRS be designed for a min ultimate force of 16 psf multiplied by the wall area plus an 8 psf force applied to the vertical projection of the roof.

ASCE 7-10 SECTION 27.4.7

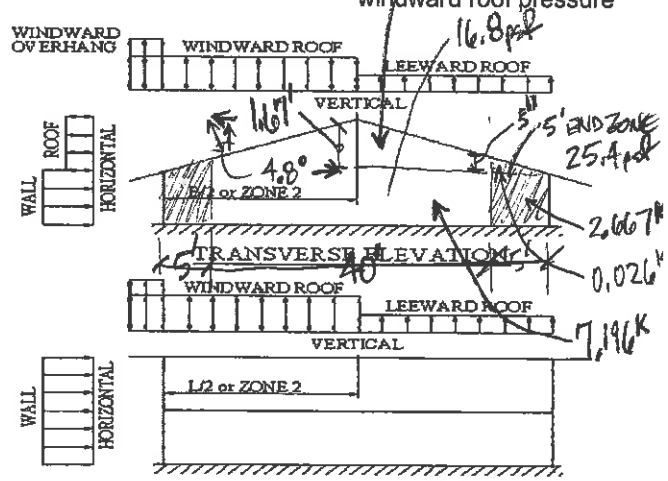

$(0.279^K + 7.196^K + 2.667^K + 0.026^K) \times 2$
$= 1.0W \Rightarrow 20.34^K \times 0.6$
$= 12.20^K$

ARCADIS
1100 Superior Suite 1250
Cleveland, OH
Phone

JOB TITLE Topok
Worksop Building
JOB NO.
SHEET NO.
CALCULATED BY MSL
DATE 12.24.14
CHECKED BY
DATE

Location of MWFRS Wind Pressure Zones

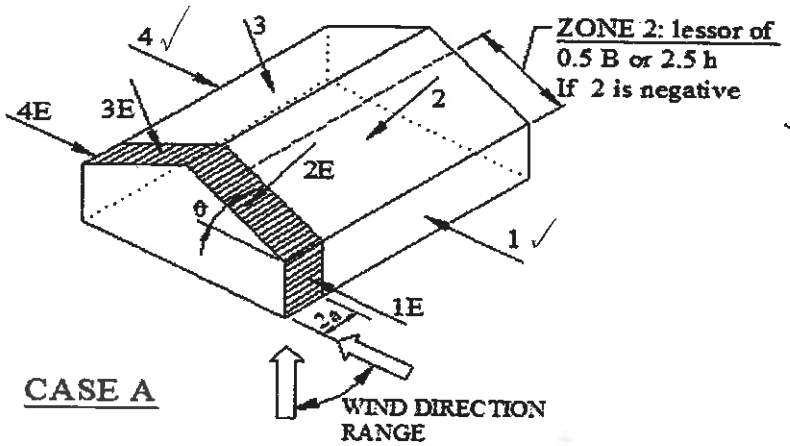

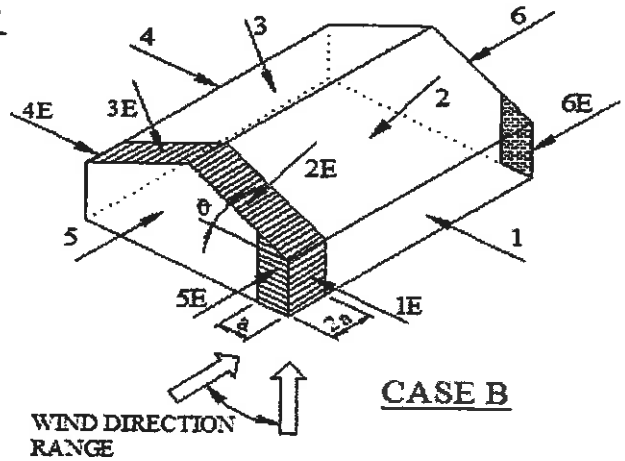

NOTE: Torsional loads are 25% of zones 1 - 6. See code for loading diagram.

ASCE 7 -99 and ASCE 7-10 (& later)

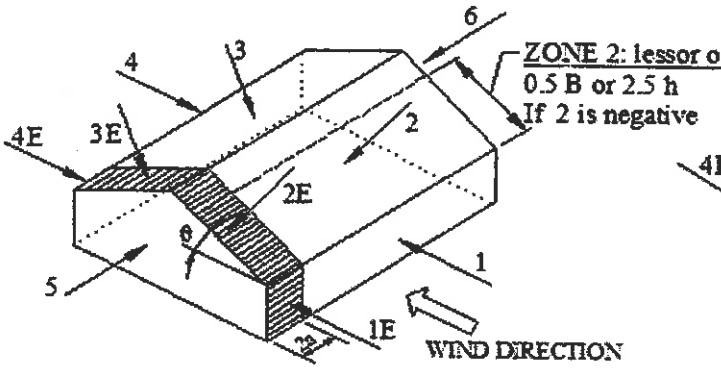

Transverse Direction

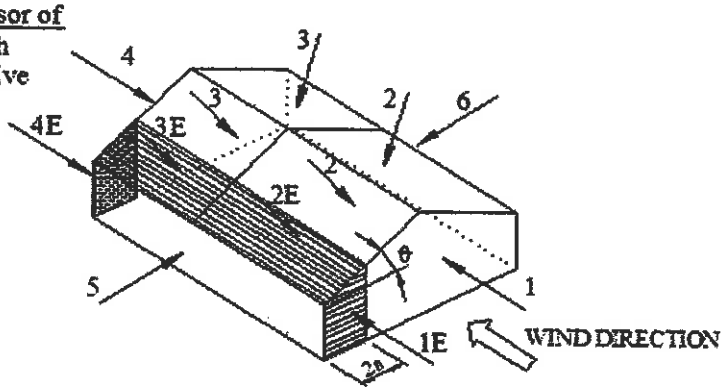

Longitudinal Direction

NOTE: Torsional loads are 25% of zones 1 - 4. See code for loading diagram.

ASCE 7 -02 and ASCE 7-05

ARCADIS
1100 Superior Suite 1250
Cleveland, OH
Phone

JOB TITLE Topok
Worksop Building
JOB NO.
SHEET NO.
CALCULATED BY MSL
DATE 12.24.14
CHECKED BY
DATE

Wind Loads - Components & Cladding : h <= 60'

Ultimate Wind Pressures

Kh (case 1) = 0.93 ✓
Base pressure (qh) = **24.4 psf**
Minimum parapet ht = 0.0 ft
Roof Angle (θ) = 4.8 deg
Type of roof = Gable

h = 22.8 ft ✓
a = 5.0 ft ✓
GCpi = +/-0.55 ✓

Roof

	GCp +/- GCpi			Surface Pressure (psf)			User input	
Area	10 sf	50 sf	100 sf	10 sf	50 sf	100 sf	25 sf	75 sf
Negative Zone 1	-1.55	-1.48	-1.45	-37.8	-36.1	-35.4	-36.9	-35.7
Negative Zone 2	-2.35	-1.86	-1.65	-57.4	-45.4	-40.3	-50.6	-42.4
Negative Zone 3	-3.35	-2.16	-1.65	-81.8	-52.8	-40.3	-65.3	-45.5
Positive All Zones	0.85	0.78	0.75	20.7	19.0	18.3	19.8	18.6
Overhang Zone 1&2	-1.70	-1.63	-1.60	-41.5	-39.8	-39.1	-40.5	-39.4
Overhang Zone 3	-2.80	-1.40	-0.80	-68.3	-34.2	-19.5	-48.9	-25.6

Overhang pressures in the table above assume an internal pressure coefficient (Gcpi) of 0.0
Overhang soffit pressure equals adjacent wall pressure minus internal pressure of -13.4 / 13.4 psf

Parapet

qp = 0.0 psf

CASE A = pressure towards building (pos)
CASE B = pressure away from bldg (neg)

	Surface Pressure (psf)			User input
Solid Parapet Pressure	10 sf	100 sf	500 sf	40 sf
CASE A : Interior zone:	0.0	0.0	0.0	0.0
Corner zone:	0.0	0.0	0.0	0.0
CASE B : Interior zone:	0.0	0.0	0.0	0.0
Corner zone:	0.0	0.0	0.0	0.0

Walls

	GCp +/- GCpi			Surface Pressure (psf)			User input	
Area	10 sf	100 sf	500 sf	10 sf	100 sf	500 sf	50 sf	200 sf
Negative Zone 4	-1.54	-1.38	-1.27	-37.6	-33.7	-31.0	-34.9	-32.5
Negative Zone 5	-1.81	-1.49	-1.27	-44.2	-36.4	-31.0	-38.8	-34.1
Positive Zone 4 & 5	1.45	1.29	1.18	35.4	31.5	28.8	32.7	30.3

Note: GCp reduced by 10% due to roof angle <= 10 deg.

ARCADIS
1100 Superior Suite 1250
Cleveland, OH
Phone

JOB TITLE Topok
Worksop Building
JOB NO.
SHEET NO.
CALCULATED BY MSL
DATE 12.24.14
CHECKED BY
DATE

Location of C&C Wind Pressure Zones

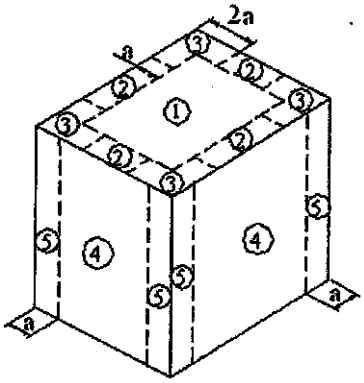

Roofs w/ $\theta \le 10°$
and all walls
h > 60'

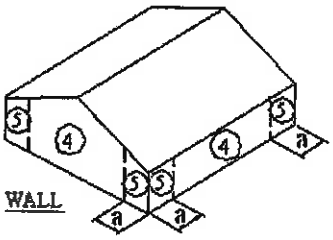

Walls h ≤ 60'
& alt design h<90'

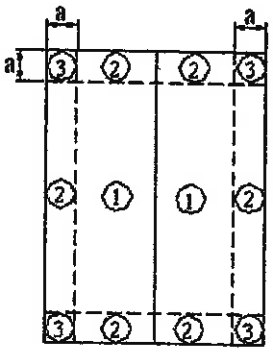

Gable, Sawtooth and
Multispan Gable $\theta \le 7$ degrees &
Monoslope ≤ 3 degrees
h ≤ 60' & alt design h<90'

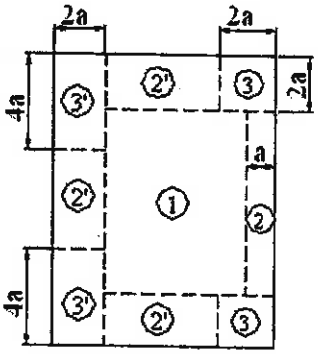

Monoslope roofs
$3° < \theta \le 10°$
h ≤ 60' & alt design h<90'

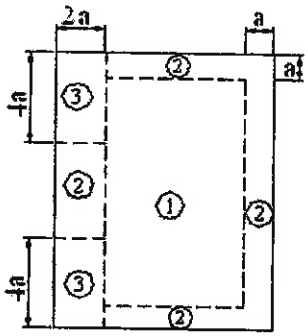

Monoslope roofs
$10° < \theta \le 30°$
h ≤ 60' & alt design h<90'

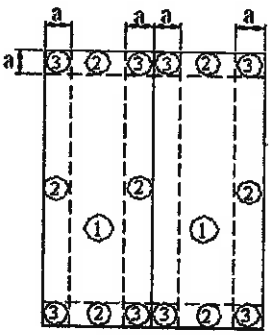

Multispan Gable &
#REF! $< \theta \le 45°$

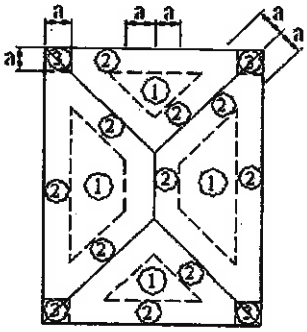

Hip $7° < \theta \le 27°$

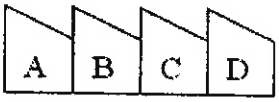

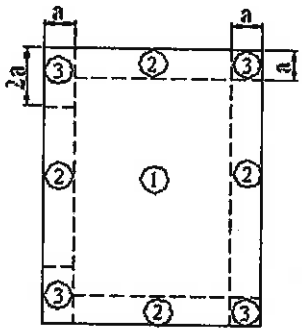

Sawtooth $10° < \theta \le 45°$
h ≤ 60' & alt design h<90'

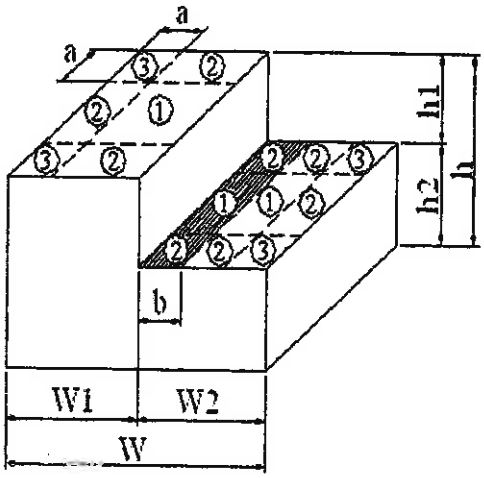

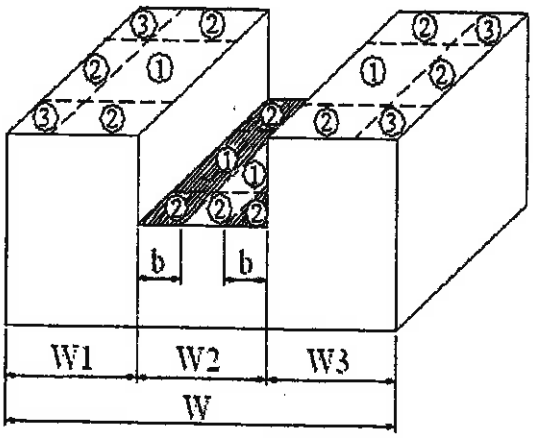

Stepped roofs $\theta \le 3°$
h ≤ 60' & alt design h<90'

ARCADIS
1100 Superior Suite 1250
Cleveland, OH
Phone

JOB TITLE	Topok Worksop Building		
JOB NO.		SHEET NO.	
CALCULATED BY	MSL	DATE	12.24.14
CHECKED BY		DATE	

Wind Loads - Rooftop Structures & Equipment

Ultimate Wind Pressures

Building (L) = 60.0 ft ✓
Building (B) = 50.0 ft ✓

Directionality (Kd) = 0.85 ✓

Rooftop Structures & Equipment #1

Equipment length parallel to L = 15.0 ft
Equipment length parallel to B = 10.0 ft
Height of equipment = 10.0 ft

Base pressure (qh) = **24.4** psf ✓

Vertical wind pressure		Wind normal to building B		Wind normal to building L	
Ar =	150.0 sf	Ar =	100.0 sf	Ar =	150.0 sf
GCr =	1.500	GCr =	1.90	GCr =	1.89
F = qhGCr Ar =	**36.6** Ar (psf)	F = qhGCr Ar =	**46.4** Ar (psf)	F = qhGCr Ar =	**46.1** Ar (psf)
Fv =	**5.5** kips	Fh =	**4.6** kips	Fh =	**6.9** kips

Rooftop Structures & Equipment #2

Equipment length parallel to L = 15.0 ft
Equipment length parallel to B = 10.0 ft
Height of equipment = 10.0 ft

Base pressure (qh) = **24.4** psf ✓

Vertical wind pressure		Wind normal to building B		Wind normal to building L	
Ar =	150.0 sf	Ar =	100.0 sf	Ar =	150.0 sf
GCr =	1.500	GCr =	1.90	GCr =	1.89
F = qhGCr Ar =	**36.6** Ar (psf)	F = qhGCr Ar =	**46.4** Ar (psf)	F = qhGCr Ar =	**46.1** Ar (psf)
Fv =	**5.5** kips	Fh =	**4.6** kips	Fh =	**6.9** kips

ARCADIS
1100 Superior Suite 1250
Cleveland, OH
Phone

JOB TITLE	Topok Worksop Building		
JOB NO.		SHEET NO.	
CALCULATED BY	MSL	DATE	12.24.14
CHECKED BY		DATE	

Wind Loads - Other Structures:

Ultimate Wind Pressures

Importance Factor =	1.00		
Gust Effect Factor (G) =	0.85	Wind Speed =	110 mph
Kzt =	1.00	Exposure =	C

A. Solid Freestanding Walls & Solid Signs (& open signs with less than 30% open)

		s/h =	1.00	**Case A & B**	
Dist to sign top (h)	8.0 ft	B/s =	25.00	C_f =	1.30
Height (s)	8.0 ft	Lr/s =	0.00	F = qz G Cf As =	**24.7 As**
Width (B)	200.0 ft	Kz =	0.849	As =	10.0 sf
Wall Return (Lr) =		qz =	22.4 psf	F =	247 lbs
Directionality (Kd)	0.85				
Percent of open area to gross area	0.0%	Open reduction factor =	1.00		

CaseC

Horiz dist from windward edge	Cf	F=qzGCfAs (psf)
0 to s	3.29	62.5 **As**
s to 2s	2.07	39.2 **As**
2s to 3s	1.59	30.1 **As**
3s to 4s	1.31	24.8 **As**
4s to 5s	1.23	23.4 **As**
5s to 10s	0.78	16.0 **As**
>10s	0.44	16.0 **As**

Case C reduction factors
Factor if s/h>0.8 = 0.80
Wall return factor for Cf at 0 to s = 1.00

B. Open Signs & Lattice Frameworks (openings 30% or more of gross area)

Height to centroid of Af (z)	15.0 ft			Kz =	0.849
				Base pressure (qz) =	22.4 psf
Width (zero if round)	0.0 ft				
Diameter (zero if rect)	2.0 ft	D(qz)^.5 =	9.46	$F = q_z G C_f A_f$ =	**20.9 Af**
Percent of open area		I =	0.65	Solid Area: A_f =	10.0 sf
to gross area	35.0%	C_f =	1.1	F =	209 lbs
Directionality (Kd)	0.85				

C. Chimneys, Tanks, Rooftop Equipment (h>60') & Similar Structures

Height to centroid of Af (z)	15.0 ft	Kz =	0.849
Cross-Section	Square	Base pressure (qz) =	23.7 psf
Directionality (Kd)	0.90		h/D = 15.00
Height (h)	15.0 ft		
Width (D)	1.0 ft		
Type of Surface	N/A		

Square (wind along diagonal)		Square (wind normal to face)	
Cf =	1.28	C_f =	1.67
F = qz G Cf Af =	**25.7 Af**	$F = q_z G C_f A_f$ =	**33.5 Af**
Af =	sf	A_f =	10.0 sf
F =	0 lbs	F =	335 lbs

D. Trussed Towers

Height to centroid of Af (z)	15.0 ft	Kz =	0.849
∈ =	0.27	Base pressure (qz) =	26.3 psf
Tower Cross Section	square		
Member Shape	flat	Diagonal wind factor =	1.2
Directionality (Kd)	1.00	Round member factor =	1.000

Square (wind along tower diagonal)		Square (wind normal to face)	
Cf =	3.24	C_f =	2.70
F = qz G Cf Af =	**72.4 Af**	$F = q_z G C_f A_f$ =	**60.3 Af**
Solid Area: Af =	10.0 sf	Solid Area: A_f =	10.0 sf
F =	724 lbs	F =	603 lbs

ARCADIS
1100 Superior Suite 1250
Cleveland, OH
Phone

JOB TITLE Topok
Worksop Building
JOB NO. SHEET NO.
CALCULATED BY MSL DATE 12.24.14
CHECKED BY DATE

Snow Loads :

Roof slope	=	4.8 deg
Horiz. eave to ridge dist (W)	=	25.0 ft
Roof length parallel to ridge (L)	=	60.0 ft

Type of Roof		Hip and gable w/ trussed systems
Ground Snow Load	Pg =	0.0 psf
Risk Category	=	II
Importance Factor	I =	1.0
Thermal Factor	Ct =	1.00
Exposure Factor	Ce =	1.0
Pf = 0.7*Ce*Ct*I*Pg	=	0.0 psf
Unobstructed Slippery Surface (per Section 7.4)		yes
Sloped-roof Factor	Cs =	1.00
Balanced Snow Load	**Ps =**	**0.0 psf**
Rain on Snow Surcharge Angle		0.50 deg
Code Maximum Rain Surcharge		5.0 psf
Rain on Snow Surcharge	=	0.0 psf
Ps plus rain surcharge	=	0.0 psf
Minimum Snow Load	Pm =	0.0 psf
Uniform Roof Design Snow Load	=	**0.0 psf**

NOTE: Alternate spans of continuous beams and other areas shall be loaded with half the design roof snow load so as to produce the greatest possible effect - see code.

Unbalanced Snow Loads - for Hip & Gable roofs only

Required if slope is between 7 on 12 =	30.26 deg	
and 2.38 deg =	2.38 deg	**Unbalanced snow loads must be applied**
Windward snow load =	0.0 psf	= 0.3Ps
Leeward snow load from ridge to 6.8' =	3.0 psf	= hdγ / √S + Ps
Leeward snow load from 6.8' to the eave =	0.0 psf	= Ps

Windward Snow Drifts 1 - Against walls, parapets, etc more than 15' long

Upwind fetch	lu =	220.0 ft
Projection height	h =	5.2 ft
Snow density	g =	14.0 pcf
Balanced snow height	hb =	0.00 ft
	hc =	5.20 ft
#DIV/0! #DIV/0!	**#DIV/0!**	
Drift height	hd =	#DIV/0!
Drift width	w =	#DIV/0!
Surcharge load:	pd = γ*hd =	**#DIV/0!**
Balanced Snow load:	=	0.0 psf
		#DIV/0!

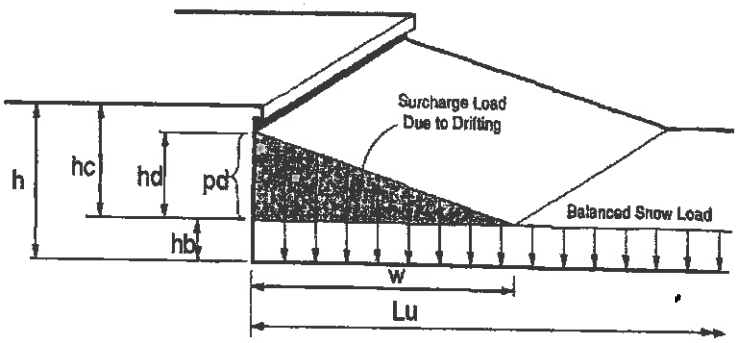

Windward Snow Drifts 2 - Against walls, parapets, etc > 15'

Upwind fetch	lu =	220.0 ft
Projection height	h =	5.2 ft
Snow density	g =	14.0 pcf
Balanced snow height	hb =	0.00 ft
	hc =	5.20 ft
#DIV/0! #DIV/0!	**#DIV/0!**	
Drift height	hd =	#DIV/0!
Drift width	w =	#DIV/0!
Surcharge load:	pd = γ*hd =	**#DIV/0!**
Balanced Snow load:	=	0.0 psf
		#DIV/0!

ARCADIS
1100 Superior Suite 1250
Cleveland, OH
Phone

JOB TITLE Topok
Worksop Building
JOB NO. SHEET NO.
CALCULATED BY MSL DATE 12.24.14
CHECKED BY DATE

Seismic Loads:

Risk Category : II ✓
Importance Factor (I) : 1.00 ✓
Site Class : D ✓

Ss (0.2 sec) = 23.00 %g ✓
S1 (1.0 sec) = 12.00 %g ✓

Fa =	1.600	Sms =	0.368	S_{DS} =	0.245 ✓	Design Category =	B
Fv =	2.320	Sm1 =	0.278	S_{D1} =	0.186 ✓	Design Category =	C ✓

Seismic Design Category = C ✓
Number of Stories: 1
Structure Type: Moment-resisting frame systems of steel ✓
Horizontal Struct Irregularities: No plan Irregularity
Vertical Structural Irregularities: No vertical Irregularity
Flexible Diaphragms: No
Building System: **Moment-resisting Frame Systems** ✓
Seismic resisting system: **Steel ordinary moment frames** ✓
System Structural Height Limit: **Height not limited**
Actual Structural Height (hn) = 22.8 ft ✓

(4) #/ft DL STAIRS (LANDING/HANDRAIL) x 19.083ft x 4 STRINGERS = 3.13K
1000# MISC STEEL ON STAIRS = 1K
10 psf INTERIOR WALLS x 10ft TALL x 50ft LONG x 5 = 25K
(4 + 1 ~FOR ALL L/W & MISC N/S WALLS)
10 psf INTERIOR ROOM CEILING x [(0.75ft WIDE x 50ft) + [7' x 21.5']] = 6.88K
TOTAL = 36.01K

DESIGN COEFFICIENTS AND FACTORS

Response Modification Coefficient (R) = 3.5 ✓
Over-Strength Factor (Ωo) = 3
Deflection Amplification Factor (Cd) = 3
S_{DS} = 0.245
S_{D1} = 0.186

Seismic Load Effect (E) = ρQ_E +/- $0.2S_{DS}$ D = ρQ_E +/- 0.049D
Special Seismic Load Effect (Em) = $\Omega o\ Q_E$ +/- $0.2S_{DS}$ D = 3.0 Q_E +/- 0.049D

ρ = redundancy coefficient
Q_E = horizontal seismic force
D = dead load

PERMITTED ANALYTICAL PROCEDURES

TOTAL DL = 143.38K x (Cs = 0.07)
= 10,000# BASE SHEAR

Simplified Analysis - Use Equivalent Lateral Force Analysis

Equivalent Lateral-Force Analysis - Permitted
Building period coef. (C_T) = 0.028 Cu = 1.53
Approx fundamental period (Ta) = $C_T h_n^x$ = 0.342 sec x= 0.80 Tmax = CuTa = 0.522
User calculated fundamental period (T) = 0 sec Use T = 0.342
Long Period Transition Period (TL) = ASCE7 map = 12
Seismic response coef. (Cs) = $S_{DS}I/R$ = 0.070
need not exceed Cs = Sd1 I /RT = 0.155
but not less than Cs = 0.044SdsI = 0.011
USE Cs = 0.070
Design Base Shear V = 0.070W

Model & Seismic Response Analysis - Permitted (see code for procedure)

ALLOWABLE STORY DRIFT

Structure Type: All other structures
Allowable story drift = 0.020hsx where hsx is the story height below level x

- 16.5 psf ROOF DL x 50' x 60' = 49,500#
- 6 psf x 21' EAVE x [(60' x 2) + (50' x 2)] = 27,720#
- 50#/ft COLUMNS x 21' x 8 COLUMNS = 8,400#
- [75#/ft x [(4 x 50' LONG) + (2' x 25' LONG)]] 18,750#
- 3000# MANDRAIL CONNECTIONS & BRIDGE DL

TOTAL DL = 107,370#

Seismic Loads - cont. :

Seismic Design Category (SDC)= C
I = 1.00
Sds = 0.245

CONNECTIONS

Force to connect smaller portions of structure to remainder of structure

$Fp = 0.133Sdsw_p =$ $0.033\ w_p$

or $Fp = 0.05w_p =$ $0.05\ w_p$ Use Fp = $0.05\ w_p$ w_p = weight of smaller portion

Beam, girder or truss connection for resisting horizontal force parallel to member

F_P = no less than 0.05 times dead plus live load vertical reaction

Anchorage of Structural Walls to elements providing lateral support

Fp = 0.20Ww = 0.20 Ww or
See ASCE7 Sect 12.11.2.1 for flexible diaphrams
Fp =0.4SdsIWw = 0.098 Ww (for rigid diaphragm) Fp = 0.2 Ww
but Fp shall not be less than 5 psf

MEMBER DESIGN

Bearing Walls and Shear Walls (out of plane force)

$Fp = 0.4SdsIWw =$ $0.098\ w_w$

but not less than $0.10\ w_w$ Use Fp = $0.10\ w_w$

Diaphragms

Fp = 0.2ISdsWp + Vpx = 0.049 Wp + Vpx

ARCHITECTURAL COMPONENTS SEISMIC COEFFICIENTS

Architectural Component : Interior Nonstructural Walls and Partitions:
Plain (unreinforced) masonry walls

Importance Factor (Ip) : 1.0

Component Amplification Factor (a_p) = 1 h= 22.8 feet

Comp Response Modification Factor (R_p) = 1.5 z= 50.0 feet z/h = 1.00

$Fp = 0.4a_pSdsIpWp(1+2z/h)/Rp =$ 0.196 Wp

not greater than Fp = 1.6SdsIpWp = 0.393 Wp

but not less than Fp = 0.3SdsIpWp = 0.074 Wp use Fp = 0.196 Wp

MECH AND ELEC COMPONENTS SEISMIC COEFFICIENTS

Mech or Electrical Component : Elevator and escalator components.

Importance Factor (Ip) : 1.5

Component Amplification Factor (a_p) = 1 h= 22.8 feet

Comp Response Modification Factor (R_p) = 2.5 z= 50.0 feet z/h = 1.00

$Fp = 0.4a_pSdsIpWp(1+2z/h)/Rp =$ 0.177 Wp

not greater than Fp = 1.6SdsIpWp = 0.589 Wp

but not less than Fp = 0.3SdsIpWp = 0.110 Wp use Fp = 0.177 Wp

ARCADIS
1100 Superior Suite 1250
Cleveland, OH
Phone

JOB TITLE	Topok Worksop Building
JOB NO.	
SHEET NO.	I-4
CALCULATED BY	MSL
DATE	12.24.14
CHECKED BY	
DATE	

Wind Loads :

Ultimate Wind Speed	110 mph
Directionality (Kd)	0.85
Exposure Category	C
Enclosure Classif.	Enclosed Building
Internal pressure	+/-0.18
Kh case 1	0.927
Kh case 2	0.927
Type of roof	Gable

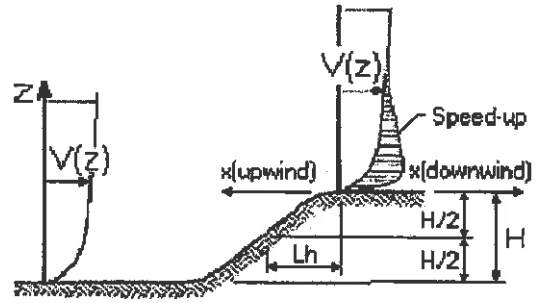

ESCARPMENT

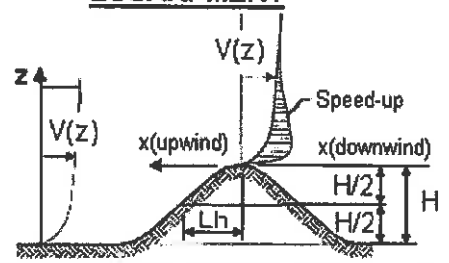

2D RIDGE or 3D AXISYMMETRICAL HILL

Topographic Factor (Kzt)

Topography		Flat
Hill Height	(H)	80.0 ft
Half Hill Length (Lh)		100.0 ft
Actual H/Lh	=	0.80
Use H/Lh	=	0.50
Modified Lh	=	160.0 ft
From top of crest: x =		50.0 ft
Bldg up/down wind?		downwind

H/Lh= 0.50	K_1 =	0.000
x/Lh = 0.31	K_2 =	0.792
z/Lh = 0.14	K_3 =	1.000

At Mean Roof Ht:

$Kzt = (1+K_1K_2K_3)^2$ = 1.00

Gust Effect Factor

h =	22.8 ft
B =	50.0 ft
/z (0.6h) =	15.0 ft

Flexible structure if natural frequency < 1 Hz (T > 1 second).
However, if building h/B < 4 then probably rigid structure (rule of thumb).
h/B = 0.46 Rigid structure

G = 0.85 Using rigid structure default

Rigid Structure

ē =	0.20	
ℓ =	500 ft	
z_{min} =	15 ft	
c =	0.20	
g_Q, g_v =	3.4	
L_z =	427.1 ft	
Q =	0.91	
I_z =	0.23	
G =	0.88	use G = 0.85

Flexible or Dynamically Sensitive Structure

Natural Frequency (η_1) =	0.0 Hz				
Damping ratio (β) =	0				
/b =	0.65				
/α =	0.15				
Vz =	92.9				
N_1 =	0.00				
R_n =	0.000				
R_h =	28.282	η =	0.000	h =	22.8 ft
R_B =	28.282	η =	0.000		
R_L =	28.282	η =	0.000		
g_R =	0.000				
R =	0.000				
G =	0.000				

ARCADIS
1100 Superior Suite 1250
Cleveland, OH
Phone

JOB TITLE Topok
Worksop Building
JOB NO. SHEET NO.
CALCULATED BY MSL DATE 12.24.14
CHECKED BY DATE

Enclosure Classification

Test for Enclosed Building: A building that does not qualify as open or partially enclosed.

Test for Open Building: All walls are at least 80% open.
Ao ≥ 0.8Ag

Test for Partially Enclosed Building:

	Input			Test	
Ao	11.1	sf	Ao ≥ 1.1Aoi	NO	
Ag	1275.0	sf	Ao > 4' or 0.01Ag	YES	
Aoi	11.1	sf	Aoi / Agi ≤ 0.20	YES	Building is NOT Partially Enclosed ✓
Agi	3400.0	sf			

Conditions to qualify as Partially Enclosed Building. Must satisfy all of the following:
Ao ≥ 1.1Aoi
Ao > smaller of 4' or 0.01 Ag
Aoi / Agi ≤ 0.20
Where:
Ao = the total area of openings in a wall that receives positive external pressure.
Ag = the gross area of that wall in which Ao is identified.
Aoi = the sum of the areas of openings in the building envelope (walls and roof) not including Ao.
Agi = the sum of the gross surface areas of the building envelope (walls and roof) not including Ag.

Reduction Factor for large volume partially enclosed buildings (Ri) :

If the partially enclosed building contains a single room that is unpartitioned , the internal pressure coefficient may be multiplied by the reduction factor Ri.

Total area of all wall & roof openings (Aog): 0 sf
Unpartitioned internal volume (Vi) : 0 cf
Ri = 1.00

Altitude adjustment to constant 0.00256 (caution - see code) :

Altitude = 0 feet
Constant = 0.00256

Average Air Density = 0.0765 lbm/ft^3

ARCADIS
1100 Superior Suite 1250
Cleveland, OH
Phone

JOB TITLE Topok
Worksop Building
JOB NO. SHEET NO.
CALCULATED BY MSL DATE 12.24.14
CHECKED BY DATE

Wind Loads - MWFRS all h (Enclosed/partially enclosed only)

Kh (case 2) =	0.93	h =	22.8 ft	GCpi =	+/-0.18
Base pressure (q_h) =	**24.4 psf**	ridge ht =	24.9 ft	G =	0.85
Roof Angle (θ) =	4.8 deg	L =	60.0 ft	qi = qh	
Roof tributary area - (h/2)*L:	684 sf	B =	50.0 ft		
(h/2)*B:	570 sf				

Ultimate Wind Surface Pressures (psf)

Surface	Wind Normal to Ridge B/L = 0.83 h/L = 0.46				Wind Parallel to Ridge L/B = 1.20 h/L = 0.38				
	Cp	q_hGC_p	w/+q_iGC_{pi}	w/-q_hGCpi	Dist.*	Cp	q_hGC_p	w/ +q_iGC_{pi}	w/ -q_hGC_{pi}
Windward Wall (WW)	0.80	16.6	see table below			0.80	16.6	see table below	
Leeward Wall (LW)	-0.50	-10.4	-14.8	-6.0		-0.46	-9.5	-13.9	-5.2
Side Wall (SW)	-0.70	-14.5	-18.9	-10.1		-0.70	-14.5	-18.9	-10.1
Leeward Roof (LR)		**				Included in windward roof			
Windward Roof: 0 to h/2*	-0.90	-18.7	-23.1	-14.3	0 to h/2*	-0.90	-18.7	-23.1	-14.3
h/2 to h*	-0.90	-18.7	-23.1	-14.3	h/2 to h*	-0.90	-18.7	-23.1	-14.3
h to 2h*	-0.50	-10.37	-14.77	-5.98	h to 2h*	-0.50	-10.4	-14.8	-6.0
> 2h*	-0.30	-6.22	-10.62	-1.83	> 2h*	-0.30	-6.2	-10.6	-1.8

**Roof angle < 10 degrees. Therefore, leeward roof is included in windward roof pressure zones.

*Horizontal distance from windward edge

Windward Wall Pressures at "z" (psf)

	z	Kz	Kzt	Windward Wall q_zGC_p	w/+q_iGC_{pi}	w/-q_hGC_{pi}	Combined WW + LW Normal to Ridge	Parallel to Ridge
	0 to 15'	0.85	1.00	15.2	10.8	19.6	25.6	24.7
	20.0 ft	0.90	1.00	16.1	11.8	20.5	26.5	25.7
h=	22.8 ft	0.93	1.00	16.6	12.2	21.0	27.0	26.1
ridge =	24.9 ft	0.94	1.00	16.9	12.5	21.3	27.3	26.5

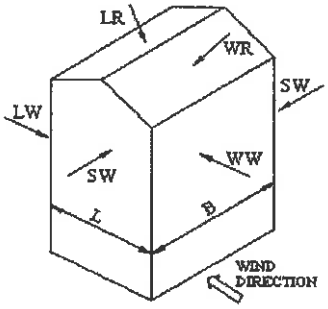

WIND NORMAL TO RIDGE

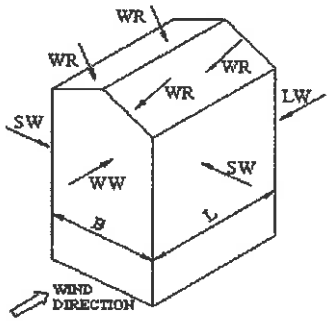

WIND PARALLEL TO RIDGE

NOTE:
See figure in ASCE7 for the application of full and partial loading of the above wind pressures. There are 4 different loading cases.

Parapet

z	Kz	Kzt	qp (psf)
0.0 ft	0.85	1.00	0.0

Windward parapet: 0.0 psf (GCpn = +1.5)
Leeward parapet: 0.0 psf (GCpn = -1.0)

Windward roof overhangs (add to windward roof pressure) : 16.6 psf (upward)

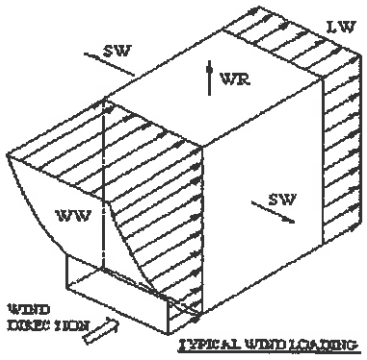

TYPICAL WIND LOADING

ARCADIS
1100 Superior Suite 1250
Cleveland, OH
Phone

JOB TITLE Topok
Worksop Building
JOB NO.
SHEET NO.
CALCULATED BY MSL
DATE 12.24.14
CHECKED BY
DATE

Wind Loads - MWFRS h≤60' (Low-rise Buildings) Enclosed/partially enclosed only

Kz = Kh (case 1) = 0.93
Base pressure (qh) = **24.4 psf** → 20psf
GCpi = +/-0.18

Edge Strip (a) = 5.0 ft
End Zone (2a) = 10.0 ft
Zone 2 length = 25.0 ft

Wind Pressure Coefficients

Surface	CASE A GCpf	θ = 4.8 deg w/-GCpi	w/+GCpi		CASE B GCpf	w/-GCpi	w/+GCpi
1	0.40	0.58	0.22		-0.45	-0.27	-0.63
2	-0.69	-0.51	-0.87		-0.69	-0.51	-0.87
3	-0.37	-0.19	-0.55		-0.37	-0.19	-0.55
4	-0.29	-0.11	-0.47		-0.45	-0.27	-0.63
5	-0.45	-0.27	-0.63		0.40	0.58	0.22
6	-0.45	-0.27	-0.63		-0.29	-0.11	-0.47
1E	0.61	0.79	0.43		-0.48	-0.30	-0.66
2E	-1.07	-0.89	-1.25		-1.07	-0.89	-1.25
3E	-0.53	-0.35	-0.71		-0.53	-0.35	-0.71
4E	-0.43	-0.25	-0.61		-0.48	-0.30	-0.66
5E					0.61	0.79	0.43
6E					-0.43	-0.25	-0.61

Ultimate Wind Surface Pressures (psf)

1		14.2	5.4		-6.6	-15.4
2		-12.4	-21.2		-12.4	-21.2
3		-4.6	-13.4		-4.6	-13.4
4		-2.7	-11.5		-6.6	-15.4
5		-6.6	-15.4		14.2	5.4
6		-6.6	-15.4		-2.7	-11.5
1E		19.3	10.5		-7.3	-16.1
2E		-21.7	-30.5		-21.7	-30.5
3E		-8.5	-17.3		-8.5	-17.3
4E		-6.1	-14.9		-7.3	-16.1
5E					19.3	10.5
6E					-6.1	-14.9

Parapet

Windward parapet = 0.0 psf (GCpn = +1.5)
Leeward parapet = 0.0 psf (GCpn = -1.0)

Windward roof overhangs = 17.1 psf (upward) add to windward roof pressure

Horizontal MWFRS Simple Diaphragm Pressures (psf)

Transverse direction (normal to L)

Interior Zone:	Wall	16.8 psf	
	Roof	-7.8 psf	**
End Zone:	Wall	25.4 psf	
	Roof	-13.2 psf	**

Longitudinal direction (parallel to L)

Interior Zone:	Wall	16.8 psf
End Zone:	Wall	25.4 psf

** NOTE: Total horiz force shall not be less than that determined by neglecting roof forces (except for MWFRS moment frames).

The code requires the MWFRS be designed for a min ultimate force of 16 psf multiplied by the wall area plus an 8 psf force applied to the vertical projection of the roof.

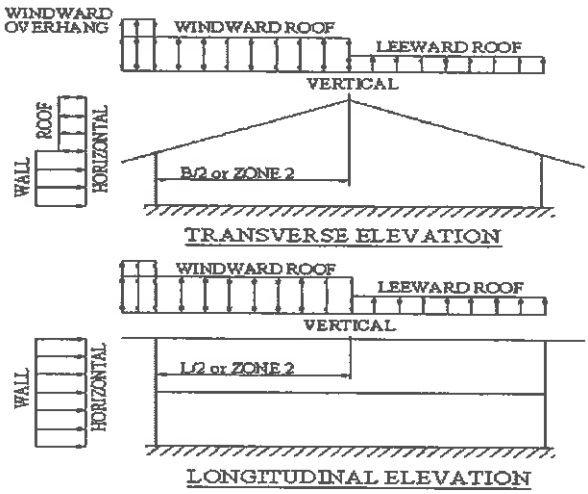

SAME AS PARTIALLY ENCLOSED BLDG

ARCADIS
1100 Superior Suite 1250
Cleveland, OH
Phone

JOB TITLE Topok
Worksop Building
JOB NO.
SHEET NO.
CALCULATED BY MSL
DATE 12.24.14
CHECKED BY
DATE

Location of MWFRS Wind Pressure Zones

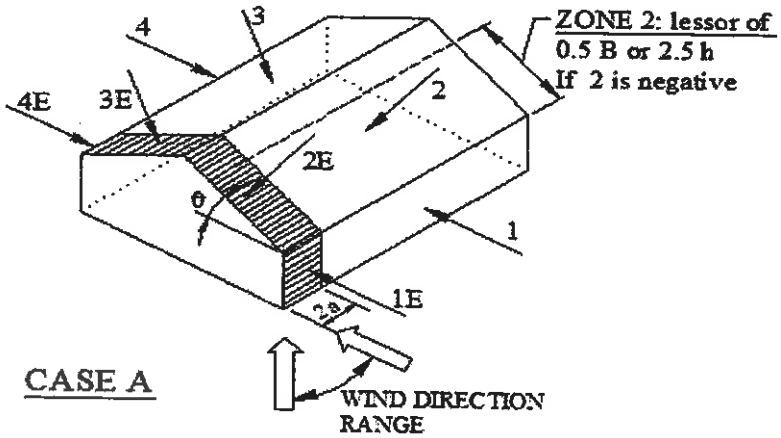

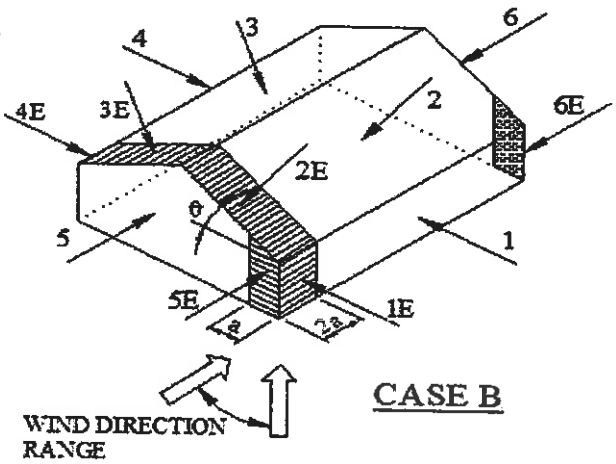

NOTE: Torsional loads are 25% of zones 1 - 6. See code for loading diagram.

ASCE 7 -99 and ASCE 7-10 (& later)

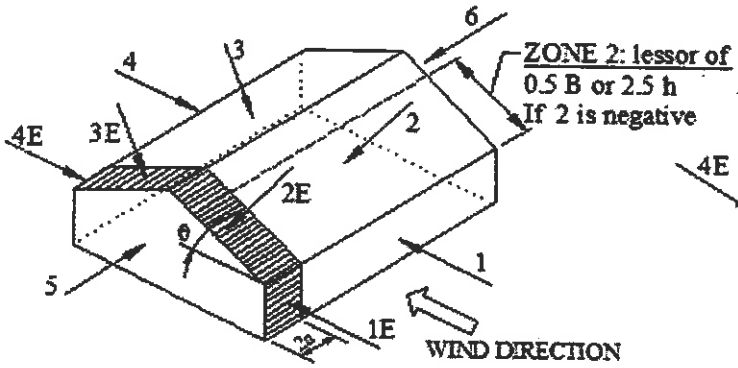

Transverse Direction

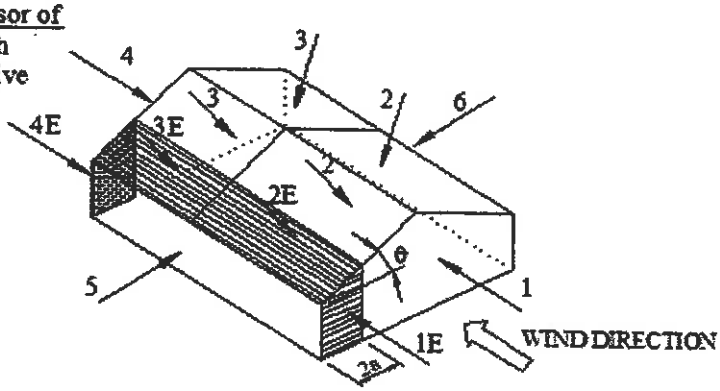

Longitudinal Direction

NOTE: Torsional loads are 25% of zones 1 - 4. See code for loading diagram.

ASCE 7 -02 and ASCE 7-05

ARCADIS
1100 Superior Suite 1250
Cleveland, OH
Phone

JOB TITLE Topok
Worksop Building
JOB NO.
SHEET NO.
CALCULATED BY MSL
DATE 12.24.14
CHECKED BY
DATE

Wind Loads - Components & Cladding : h <= 60'

Ultimate Wind Pressures

ROOF WIND LOADS 38% ↓ TO 35% ↓
C&C LOADS ARE SIGNIFICANTLY LESS THAN PARTIALLY

Kh (case 1) =	0.93	h =	22.8 ft
Base pressure (qh) =	**24.4 psf**	a =	5.0 ft
Minimum parapet ht =	0.0 ft	GCpi =	+/-0.18
Roof Angle (θ) =	4.8 deg		
Type of roof =	Gable		

Roof

	GCp +/- GCpi			Surface Pressure (psf)			User input	
Area	10 sf	50 sf	100 sf	10 sf	50 sf	100 sf	25 sf	75 sf
Negative Zone 1	-1.18	-1.11	-1.08	-28.8	-27.1	-26.4	-27.8	-26.7
Negative Zone 2	-1.98	-1.49	-1.28	-48.3	-36.4	-31.2	-41.5	-33.4
Negative Zone 3	-2.98	-1.79	-1.28	-72.7	-43.7	-31.2	-56.2	-36.4
Positive All Zones	0.48	0.41	0.38	16.0	16.0	16.0	16.0	16.0
Overhang Zone 1&2	-1.70	-1.63	-1.60	-41.5	-39.8	-39.1	-40.5	-39.4
Overhang Zone 3	-2.80	-1.40	-0.80	-68.3	-34.2	-19.5	-48.9	-25.6

Overhang pressures in the table above assume an internal pressure coefficient (Gcpi) of 0.0
Overhang soffit pressure equals adjacent wall pressure minus internal pressure of -4.4 / 4.4 psf

Parapet

qp = 0.0 psf

CASE A = pressure towards building (pos)
CASE B = pressure away from bldg (neg)

	Surface Pressure (psf)			User input
Solid Parapet Pressure	10 sf	100 sf	500 sf	40 sf
CASE A : Interior zone:	0.0	0.0	0.0	0.0
Corner zone:	0.0	0.0	0.0	0.0
CASE B : Interior zone:	0.0	0.0	0.0	0.0
Corner zone:	0.0	0.0	0.0	0.0

Walls

	GCp +/- GCpi			Surface Pressure (psf)			User input	
Area	10 sf	100 sf	500 sf	10 sf	100 sf	500 sf	50 sf	200 sf
Negative Zone 4	-1.17	-1.01	-0.90	-28.6	-24.7	-22.0	-25.8	-23.5
Negative Zone 5	-1.44	-1.12	-0.90	-35.2	-27.4	-22.0	-29.7	-25.1
Positive Zone 4 & 5	1.08	0.92	0.81	26.4	22.5	19.8	23.7	21.3

Note: GCp reduced by 10% due to roof angle <= 10 deg.

36% TO 45% ↓

ARCADIS
1100 Superior Suite 1250
Cleveland, OH
Phone

JOB TITLE	Topok Worksop Building		
JOB NO.		SHEET NO.	
CALCULATED BY	MSL	DATE	12.24.14
CHECKED BY		DATE	

Location of C&C Wind Pressure Zones

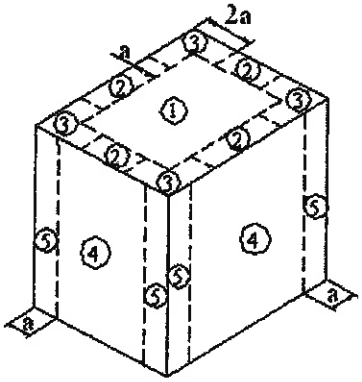

Roofs w/ θ ≤ 10°
and all walls
h > 60'

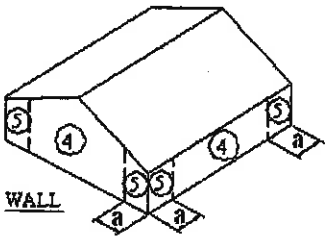

Walls h ≤ 60'
& alt design h<90'

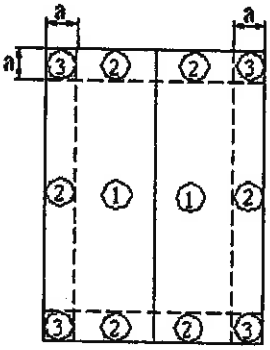

Gable, Sawtooth and
Multispan Gable θ ≤ 7 degrees &
Monoslope ≤ 3 degrees
h ≤ 60' & alt design h<90'

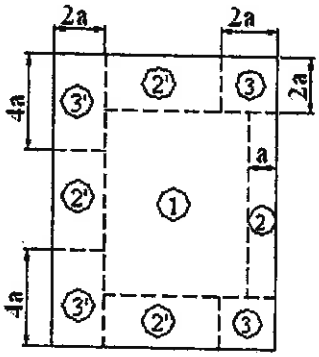

Monoslope roofs
3° < θ ≤ 10°
h ≤ 60' & alt design h<90'

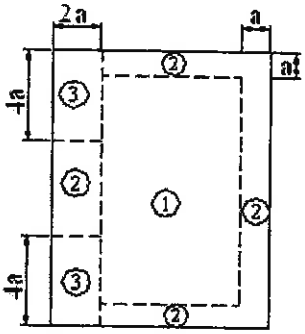

Monoslope roofs
10° < θ ≤ 30°
h ≤ 60' & alt design h<90'

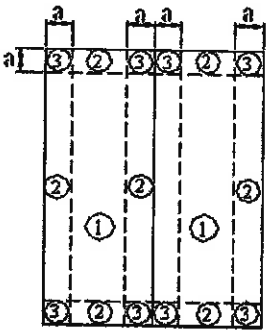

Multispan Gable &
#REF! < θ ≤ 45°

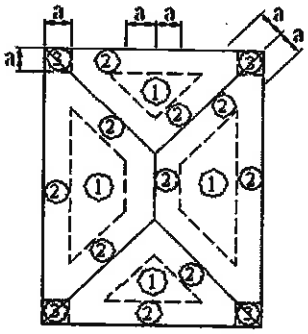

Hip 7° < θ ≤ 27°

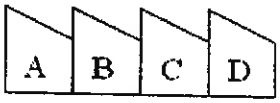

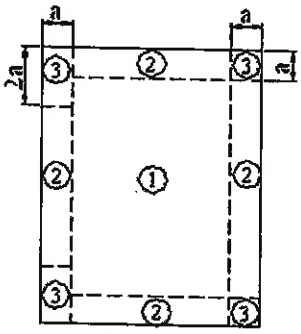

Sawtooth 10° < θ ≤ 45°
h ≤ 60' & alt design h<90'

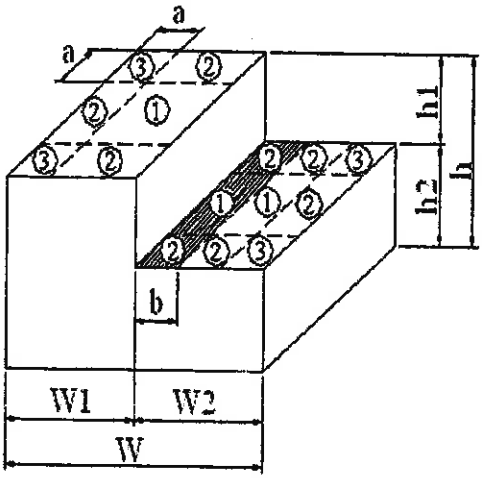

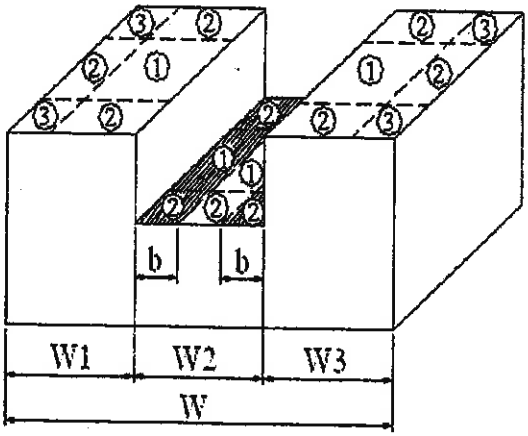

Stepped roofs θ ≤ 3°
h ≤ 60' & alt design h<90'

ARCADIS
1100 Superior Suite 1250
Cleveland, OH
Phone

JOB TITLE Topok
Worksop Building
JOB NO. SHEET NO.
CALCULATED BY MSL DATE 12.24.14
CHECKED BY DATE

Wind Loads - Other Structures:

Ultimate Wind Pressures

Importance Factor =	1.00		
Gust Effect Factor (G) =	0.85	Wind Speed =	110 mph
Kzt =	1.00	Exposure =	C

A. Solid Freestanding Walls & Solid Signs (& open signs with less than 30% open)

		s/h =	1.00	**Case A & B**	
Dist to sign top (h)	8.0 ft	B/s =	25.00	C_f =	1.30
Height (s)	8.0 ft	Lr/s =	0.00	F = qz G Cf As =	**24.7 As** ✓
Width (B)	200.0 ft	Kz =	0.849	As =	10.0 sf
Wall Return (Lr) =		qz =	22.4 psf	F =	247 lbs
Directionality (Kd)	0.85				
Percent of open area to gross area	0.0%	Open reduction factor =	1.00		

Case C reduction factors

Factor if s/h>0.8 =	0.80
Wall return factor for Cf at 0 to s =	1.00

CaseC

Horiz dist from windward edge	Cf	F=qzGCfAs (psf)
0 to s	3.29	62.5 **As**
s to 2s	2.07	39.2 **As**
2s to 3s	1.59	30.1 **As**
3s to 4s	1.31	24.8 **As**
4s to 5s	1.23	23.4 **As**
5s to 10s	0.78	16.0 **As**
>10s	0.44	16.0 **As**

B. Open Signs & Lattice Frameworks (openings 30% or more of gross area)

Height to centroid of Af (z)	15.0 ft			Kz =	0.849
				Base pressure (qz) =	22.4 psf
Width (zero if round)	0.0 ft				
Diameter (zero if rect)	2.0 ft	D(qz)^.5 =	9.46	$F = q_z G C_f A_f$ =	**20.9 Af** ✓
Percent of open area		I =	0.65	Solid Area: A_f =	10.0 sf
to gross area	35.0%	C_f =	1.1	F =	209 lbs
Directionality (Kd)	0.85				

C. Chimneys, Tanks, Rooftop Equipment (h>60') & Similar Structures

Height to centroid of Af (z)	15.0 ft	Kz =	0.849
Cross-Section	Square	Base pressure (qz) =	23.7 psf
Directionality (Kd)	0.90		h/D = 15.00
Height (h)	15.0 ft		
Width (D)	1.0 ft		
Type of Surface	N/A		

Square (wind along diagonal)		Square (wind normal to face)	
Cf =	1.28	C_f =	1.67
F = qz G Cf Af =	**25.7 Af**	$F = q_z G C_f A_f$ =	**33.5 Af** ✓
Af =	sf	A_f =	10.0 sf
F =	0 lbs	F =	335 lbs

D. Trussed Towers

Height to centroid of Af (z)	15.0 ft	Kz =	0.849
∈ =	0.27	Base pressure (qz) =	26.3 psf
Tower Cross Section	square		
Member Shape	flat	Diagonal wind factor =	1.2
Directionality (Kd)	1.00	Round member factor =	1.000

Square (wind along tower diagonal)		Square (wind normal to face)	
Cf =	3.24	C_f =	2.70
F = qz G Cf Af =	**72.4 Af**	$F = q_z G C_f A_f$ =	**60.3 Af** ✓
Solid Area: Af =	10.0 sf	Solid Area: A_f =	10.0 sf
F =	724 lbs	F =	603 lbs

ARCADIS

SUBJECT: TOPOK – WORKSHOP BLDG

JOB NO:

BY: MSL DATE: 12/5/15

CHKD: DATE:

PAGE I-5

SHEET 1

- ROOF LIVE LOAD = 20 psf
- FRAME LAYOUT:
  - ~ INTERIOR FRAME = $\left(\frac{20'-6''-1'-3''}{2}\right) + \frac{19'}{2} = 19.125^{FT}$ TRIB AREA
  - ~ END FRAME = $1'-3'' + \left(\frac{20'-6''-1'-3''}{2}\right) = 10.88^{FT}$ TRIB AREA

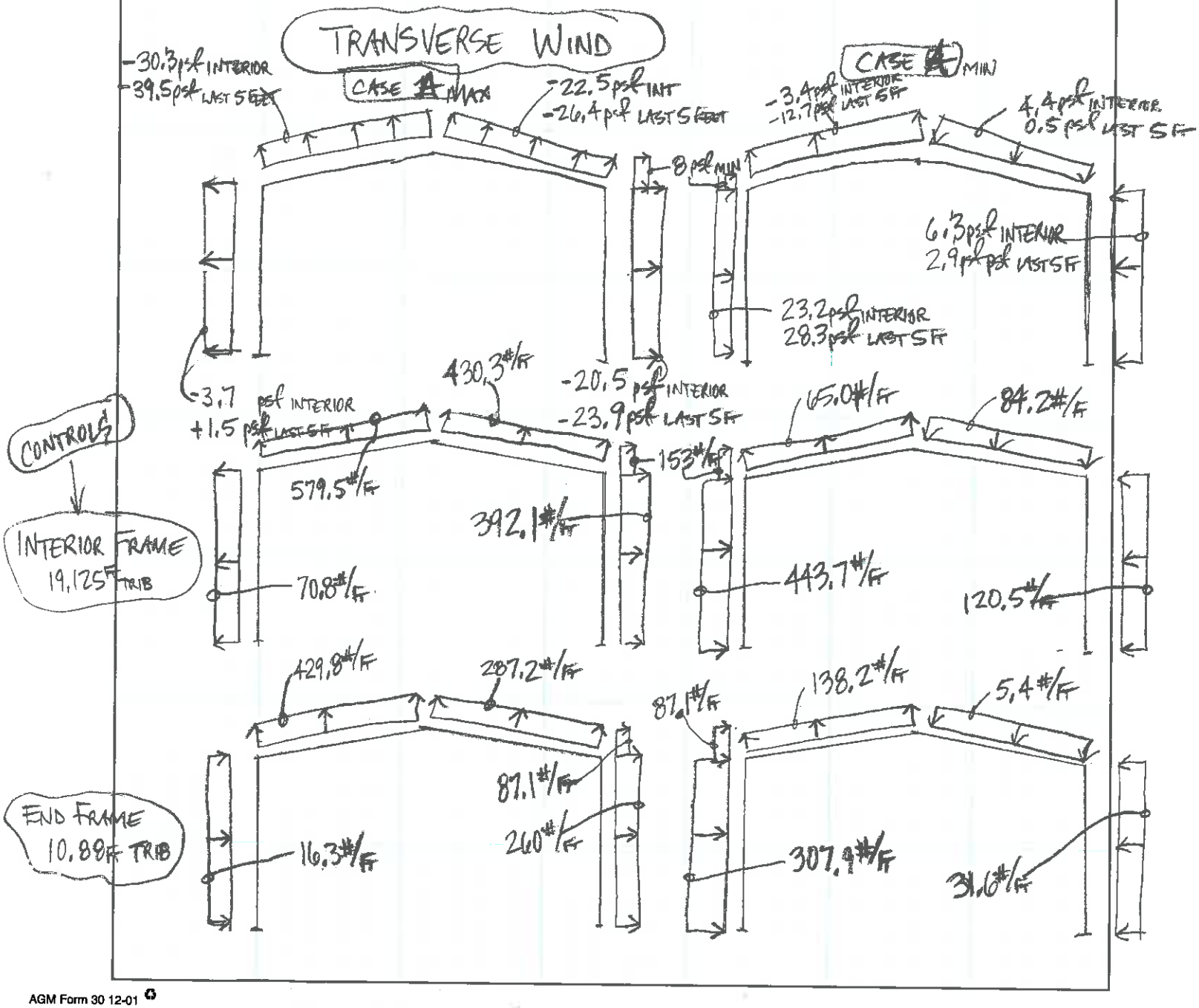

AGM Form 30 12-01

ARCADIS

SUBJECT: TOPOK – WORKSHOP BLDG

JOB NO:

BY: MSL DATE: 1/5/15

CHKD: MSL DATE: 1/6/15

PAGE I-6

SHEET 1

SEISMIC LOADS ~ $C_S = 0.07W$ (SHT I-4) ← (N/A, WIND CONTROLS PER SHT I-7)

- ROOF MAX = 16.5 psf × C_S = 1.16 psf ; BEAM DL = 70#/FT × C_S = 4.9#/FT
- WALL MAX = 6 psf × " = 0.42 psf ; COLUMN DL = 50#/FT × C_S = 3.5#/FT

CONTROLS → INTERIOR FRAME 19.125 FT

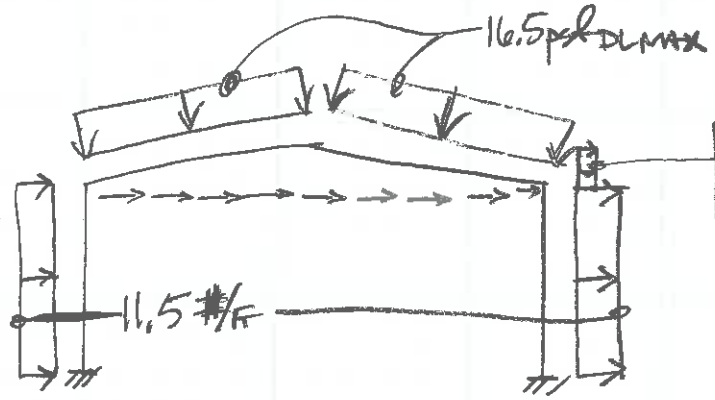

$$\frac{(4.9\,\#/FT \times 50\,FT) + (1.16\,psf \times 50\,FT \times 19.125\,FT)}{2'\text{-}1''}$$

= 650#/FT → OVER 2'-1"

OR

27.09#/FT → OVER 50 FT

~ REFERENCE SHT I-7 FOR RISA 2D FRAME

- MAX TENSION = 15.81K (LC#3) – HAIRPIN ← CONTROLS
- MAX GRAVITY = 33.06K (LC#4) ← CONTROLS
- MAX SLIDING OUT = 4.24K (LC#13) ← CONTROLS
- MAX UPLIFT = 5.2K (LC#18) ← CONTROLS

~ REF SHT I-8 FOR NUCOR LOADS

USING 19.125 FT o/c BAY SPACING FOR INTERIOR

- SPAN @ 50' SPAN WIDTH × 21 FT EAVE @ 30 FT BAY SPACING

$\frac{19.125'}{30'} = 0.638$

	RDL		RLL		WIL		WIR	
	X	Y	X	Y	X	Y	X	Y
COL 1	3.7K	11.5K	5K	15.4K	3.9K	-3.5K	11.2	-11.25K
COL 2	-3.7K	11.5K	-5K	15.4K	10.2K	-11.2K	-5.2K	-3.45K

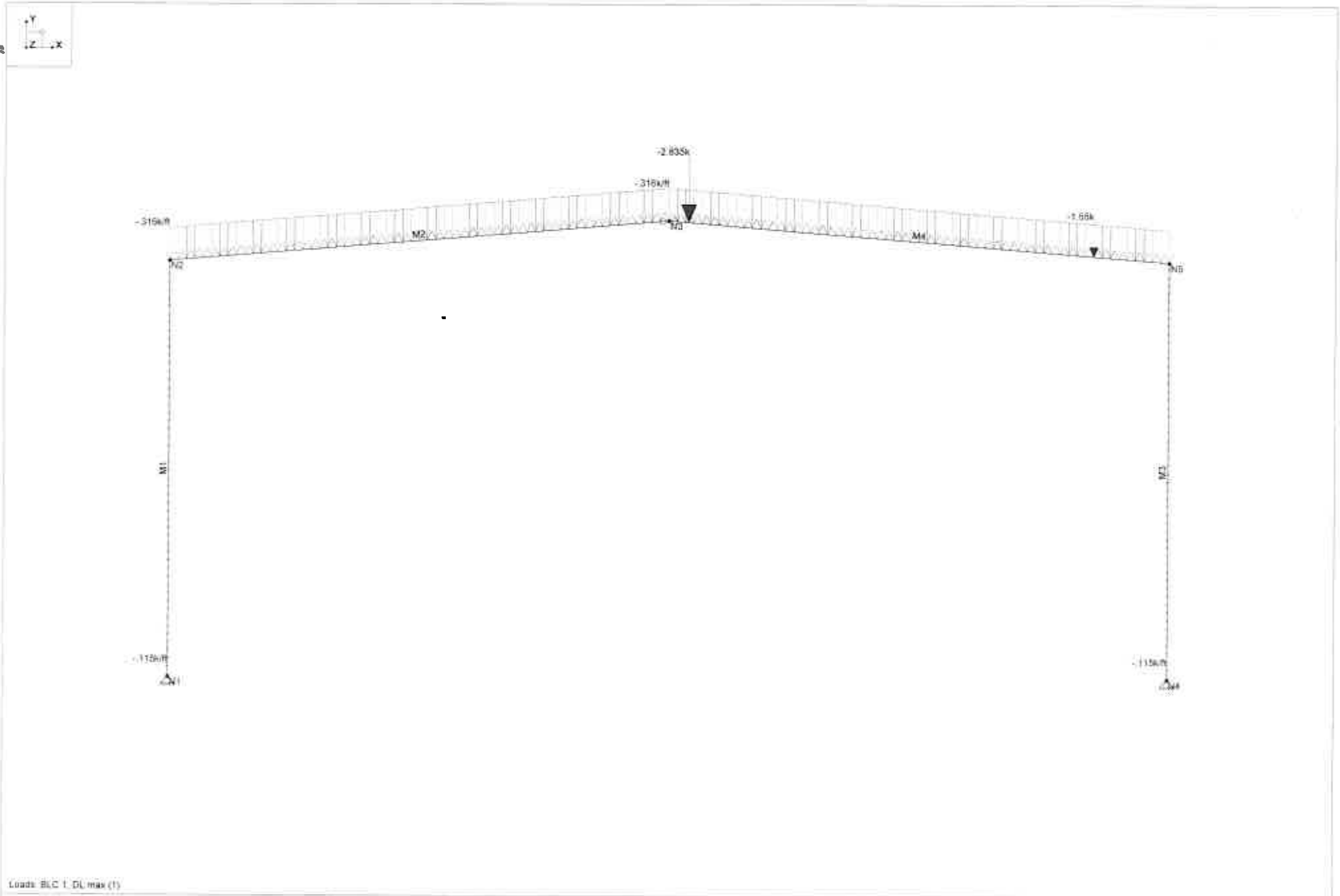

ARCADIS	Topok Workshop Building	SK - 1
Matt Ltoycz		Jan 5, 2015 at 3:45 PM
		Typical Frame.r2d

2-I

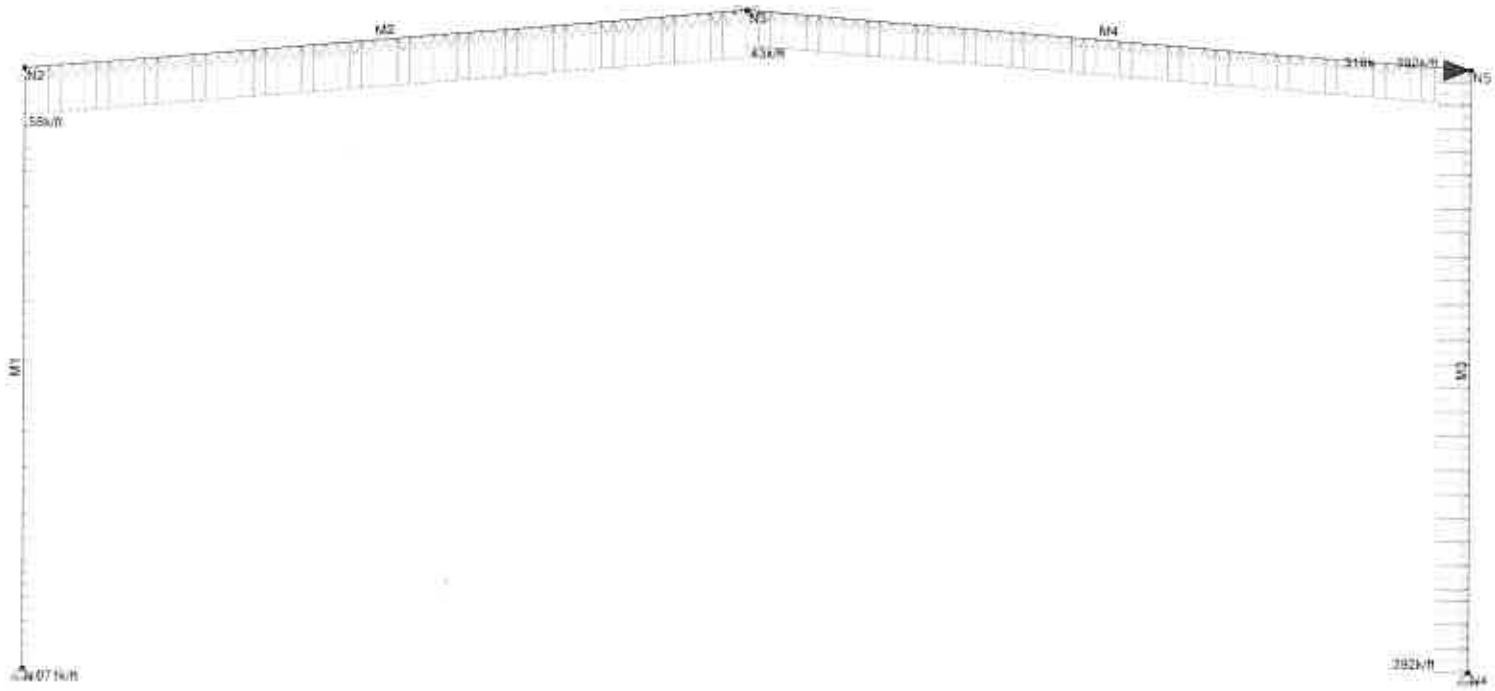

Loads: BLC 2, W1 wall and roof

ARCADIS		SK - 2
Matt Ltoycz	Topok Workshop Building	Jan 5, 2015 at 3:45 PM
		Typical Frame.r2d

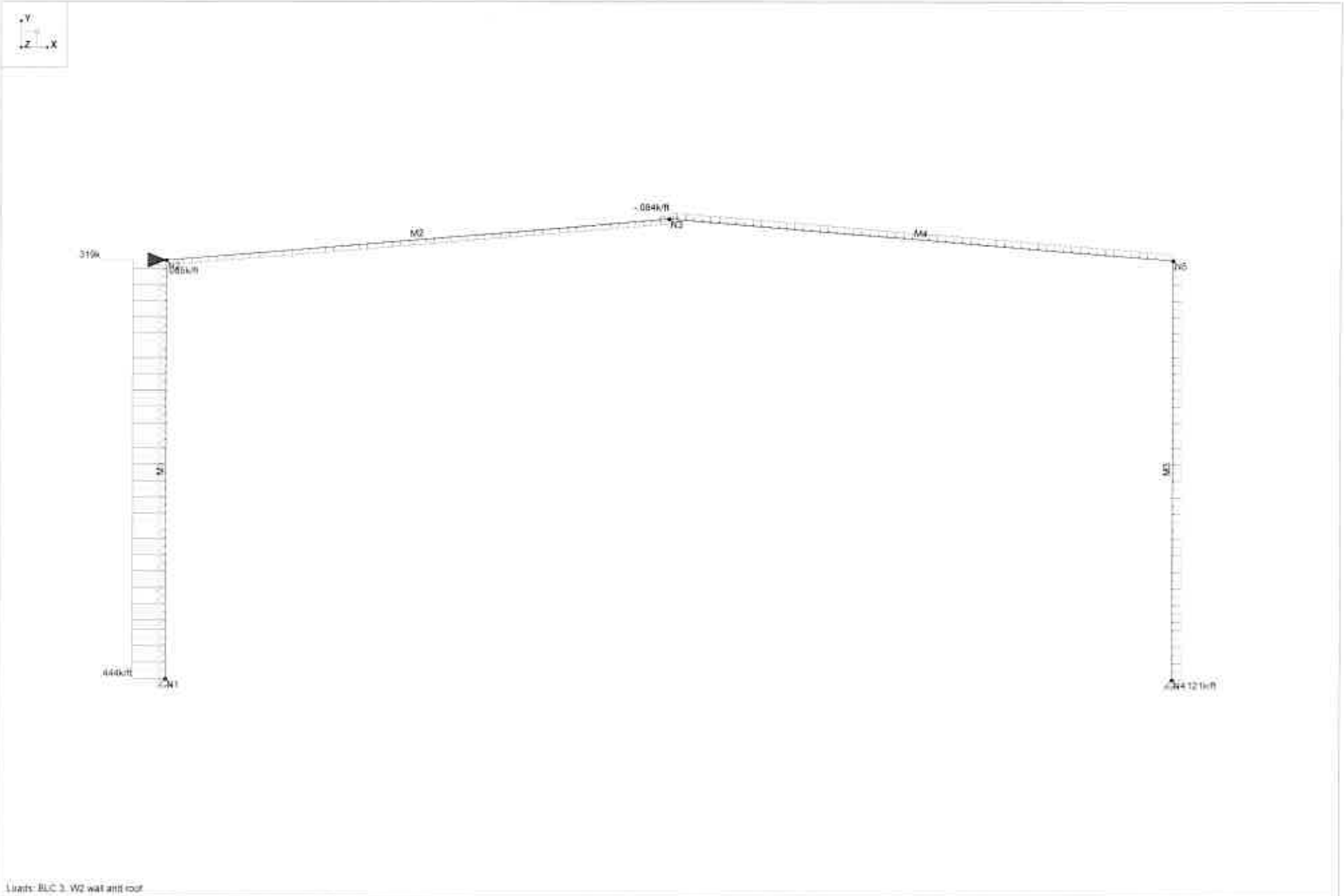

Loads: BLC 3, W2 wall and roof

ARCADIS		SK - 3
Matt Ltoycz	Topok Workshop Building	Jan 5, 2015 at 3:46 PM
		Typical Frame.r2d

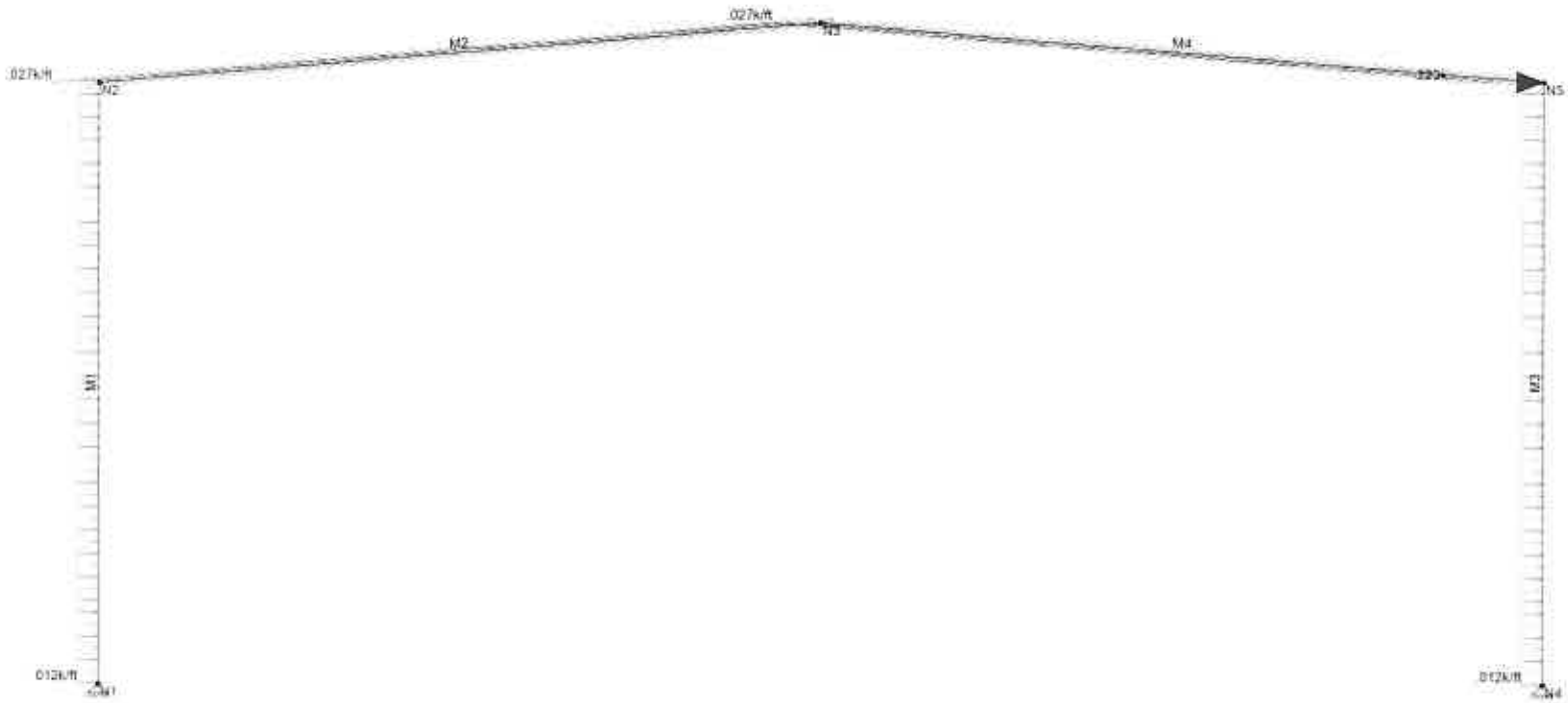

Loads: BLC 4, 5

ARCADIS		SK - 4
Matt Ltoycz	Topok Workshop Building	Jan 5, 2015 at 3:46 PM
		Typical Frame.r2d

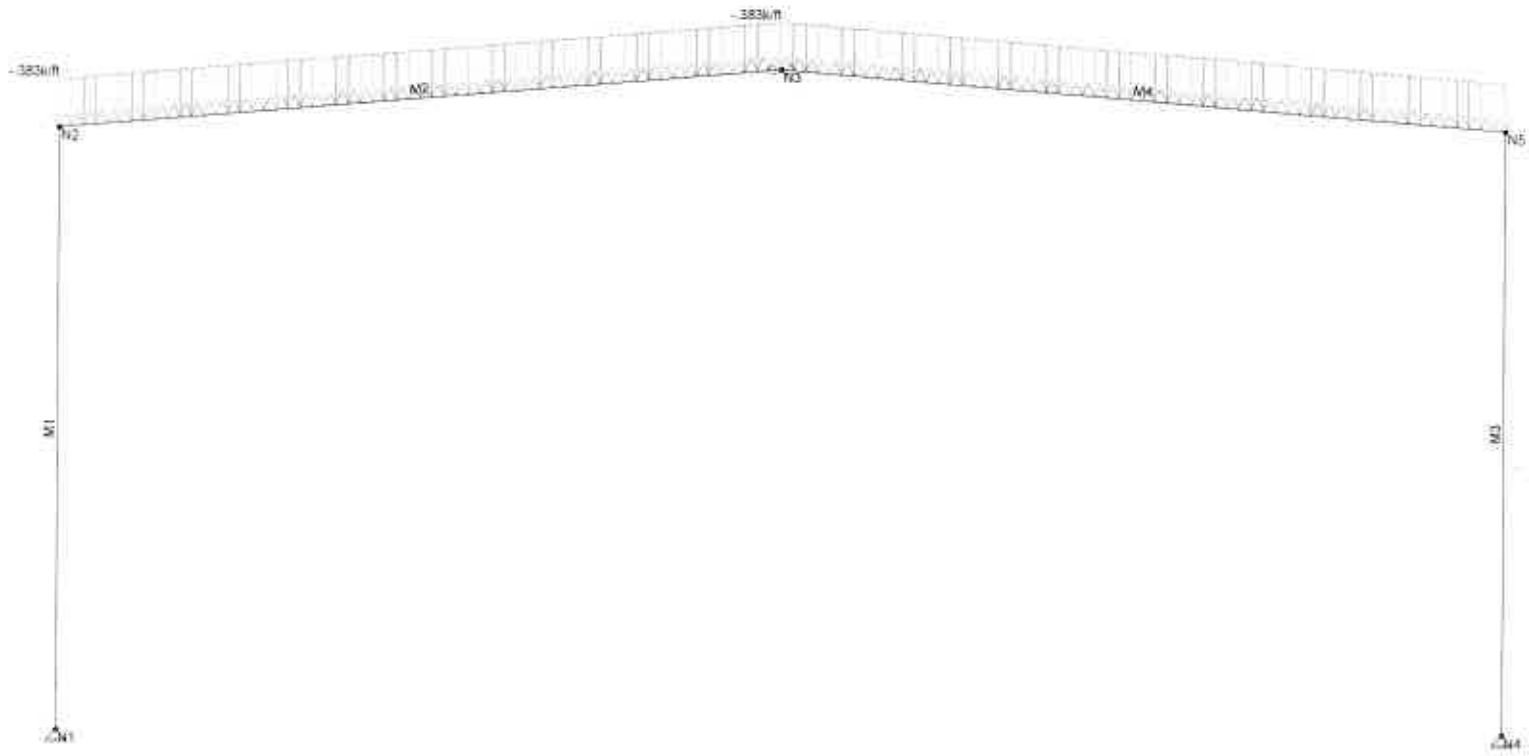

Loads: BLC 6, U-roof

ARCADIS	Topok Workshop Building	SK - 5
Matt Ltoycz		Jan 5, 2015 at 3:47 PM
		Typical Frame.r2d

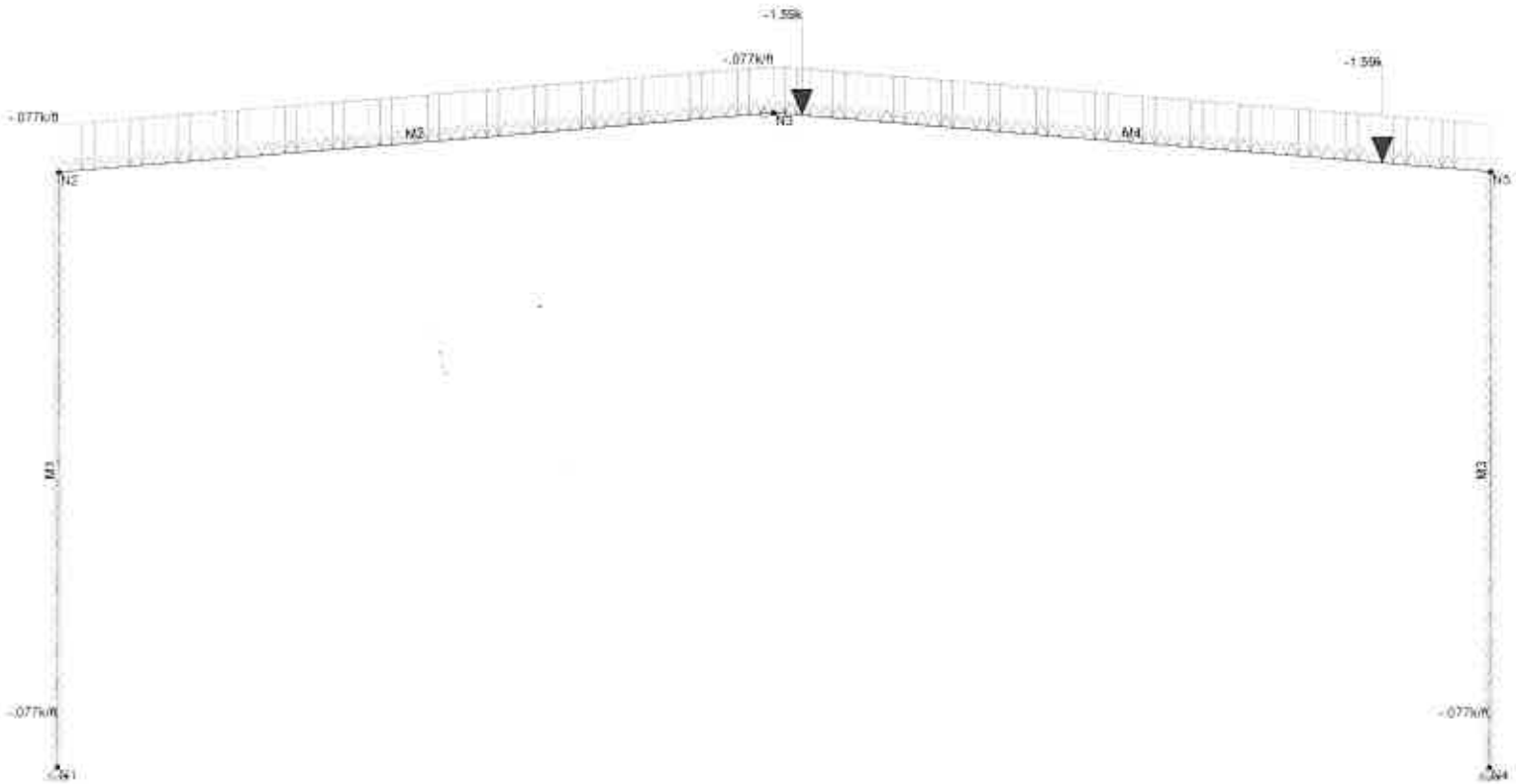

Loads: BLC 7, MIN DL (1)

ARCADIS		SK - 6
Matt Ltoycz	Topok Workshop Building	Jan 5, 2015 at 3:47 PM
		Typical Frame.r2d

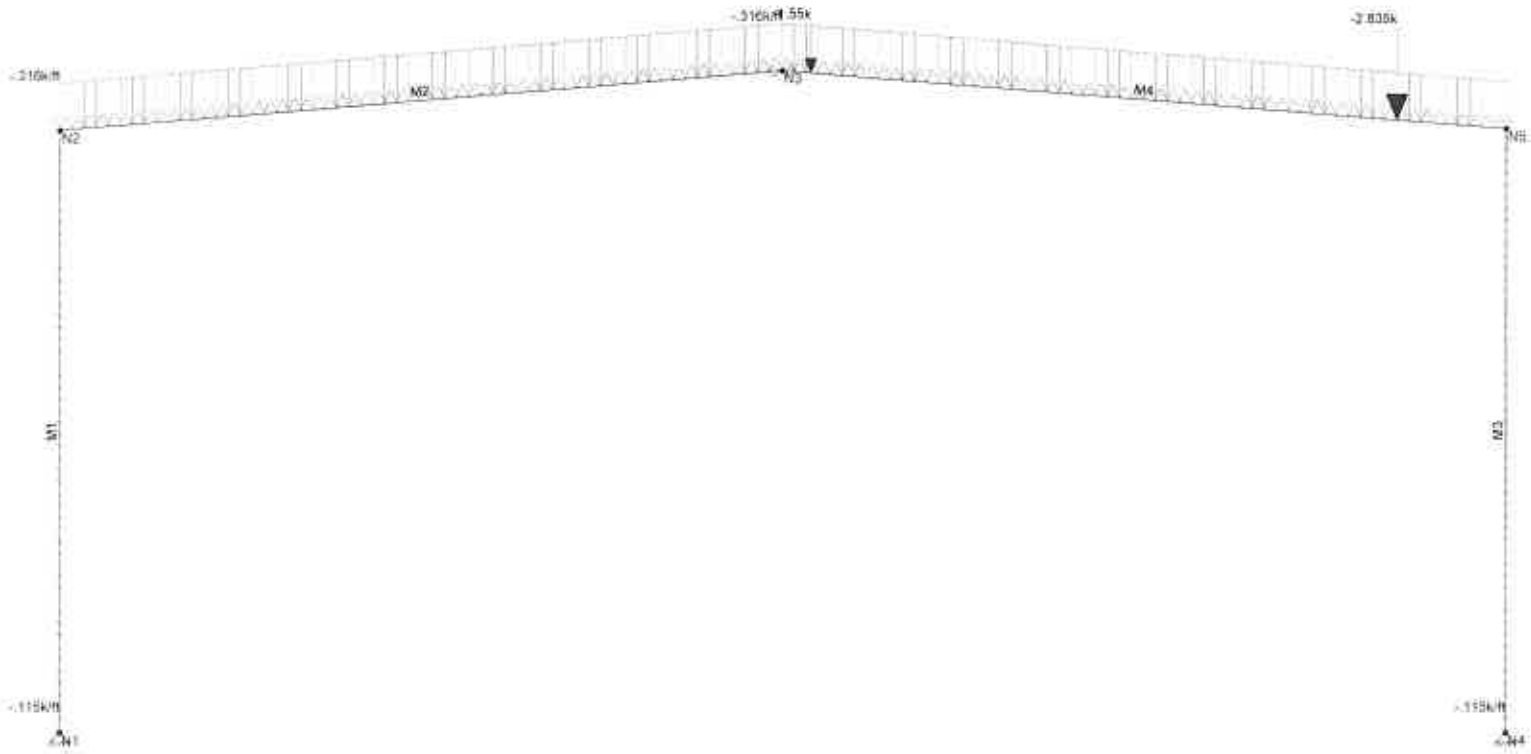

Loads: BLC 6, DL max (2)

ARCADIS		SK - 7
Matt Ltoycz	Topok Workshop Building	Jan 5, 2015 at 3:47 PM
		Typical Frame.r2d

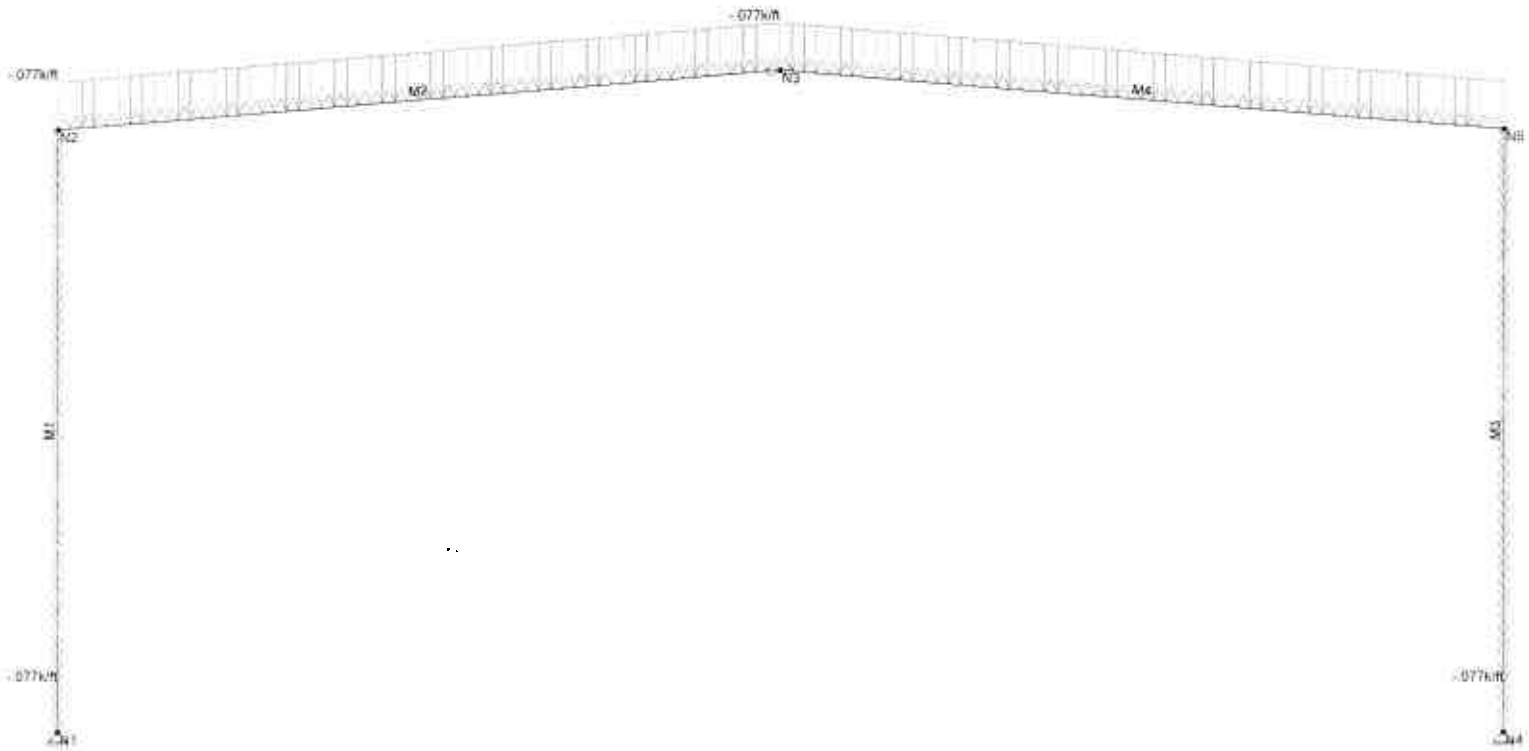

Loads: BLC 8, MIN DL (2)

ARCADIS		SK - 14
Matt Ltoycz	Topok Workshop Building	Jan 5, 2015 at 4:05 PM
		Typical Frame.r2d

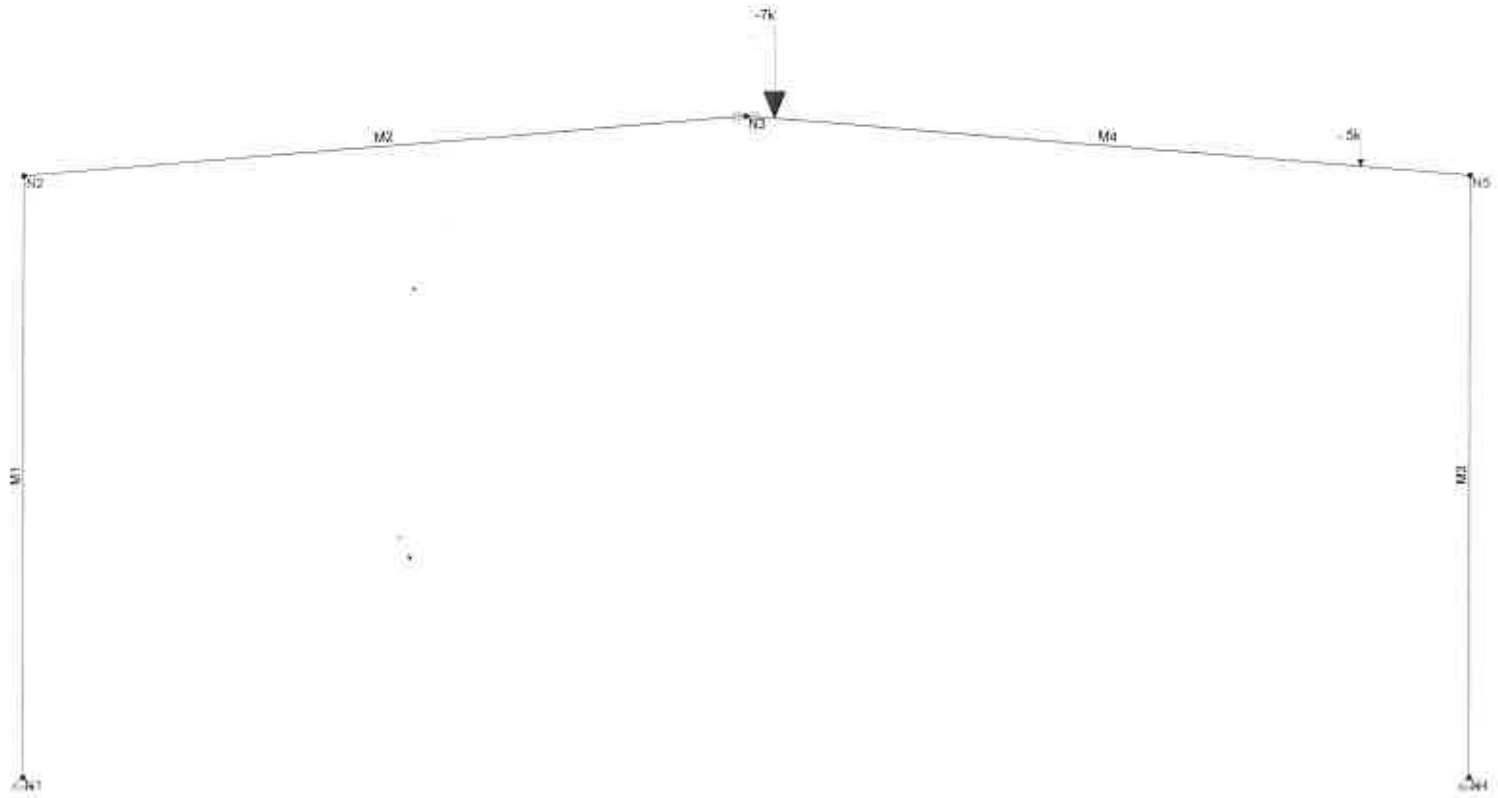

Loads: BLC 18, Lr max (1)

ARCADIS		SK - 9
Matt Ltoycz	Topok Workshop Building	Jan 5, 2015 at 3:48 PM
		Typical Frame.r2d

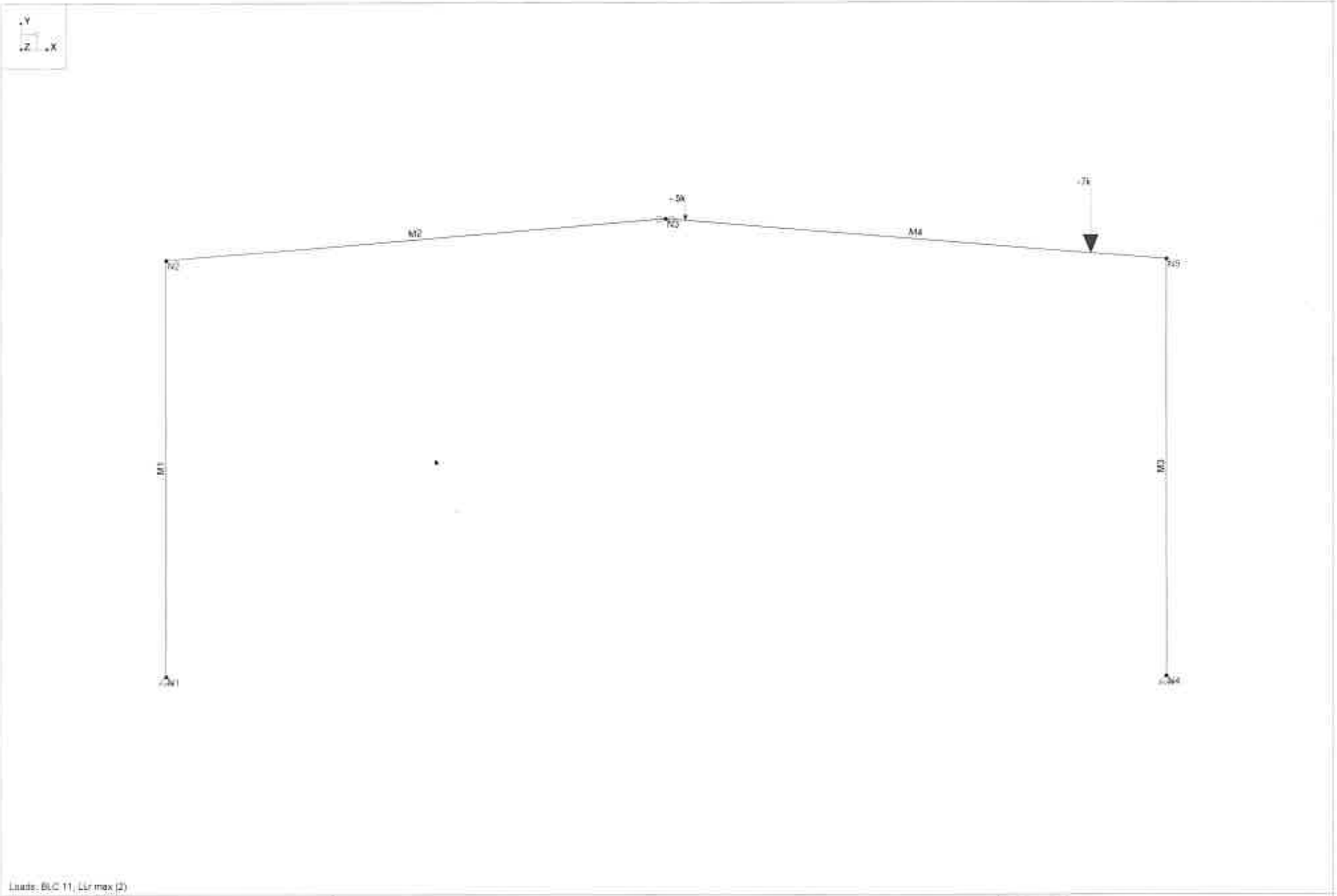

Loads: BLC 11, Lir max (2)

ARCADIS		SK - 10
Matt Ltoycz	Topok Workshop Building	Jan 5, 2015 at 3:48 PM
		Typical Frame.r2d

Joint Coordinates and Temperatures

	Label	X [ft]	Y [ft]	Temp [F]
1	N1	0	0	0
2	N2	0	21	0
3	N3	25	23.083	0
4	N4	50	0	0
5	N5	50	21	0

Joint Boundary Conditions

	Joint Label	X [k/in]	Y [k/in]	Rotation[k-ft/rad]	Footing
1	N1	Reaction	Reaction		
2	N4	Reaction	Reaction		

Member Primary Data

	Label	I Joint	J Joint	Rotate(deg)	Section/Shape	Type	Design List	Material	Design Rules
1	M1	N1	N2		W10x49	None	None	A36 Gr.36	Typical
2	M2	N2	N3		W24x76	None	None	A36 Gr.36	Typical
3	M3	N4	N5		W10x49	None	None	A36 Gr.36	Typical
4	M4	N3	N5		W24x76	None	None	A36 Gr.36	Typical

Joint Loads and Enforced Displacements (BLC 2 : W1 wall and roof)

	Joint Label	L,D,M	Direction	Magnitude[(k,k-ft), (in,rad), (k*s^2/ft...
1	N5	L	X	.319

Joint Loads and Enforced Displacements (BLC 3 : W2 wall and roof)

	Joint Label	L,D,M	Direction	Magnitude[(k,k-ft), (in,rad), (k*s^2/ft...
1	N2	L	X	.319

Joint Loads and Enforced Displacements (BLC 4 : E)

	Joint Label	L,D,M	Direction	Magnitude[(k,k-ft), (in,rad), (k*s^2/ft...
1	N5	L	X	.223

$$\left[\left(\frac{2080^{\#}+490^{\#}}{2}\right)+\left(\overset{\text{RUNWAY BEAM}}{75^{\#}/ft}\times 25'\right)\right]\times 0.07\,C_s$$

Member Point Loads (BLC 1 : DL max (1))

	Member Label	Direction	Magnitude[k,k-ft]	Location[ft,%]
1	M4	Y	-2.835	1
2	M4	Y	-1.55	21.33

Member Point Loads (BLC 7 : MIN DL (1))

	Member Label	Direction	Magnitude[k,k-ft]	Location[ft,%]
1	M4	Y	-1.59	1
2	M4	Y	-1.59	21.33

Member Point Loads (BLC 8 : DL max (2))

	Member Label	Direction	Magnitude[k,k-ft]	Location[ft,%]
1	M4	Y	-2.835	21.33
2	M4	Y	-1.55	1

Member Point Loads (BLC 10 : LLr max (1))

	Member Label	Direction	Magnitude[k,k-ft]	Location[ft,%]
1	M4	Y	-7	1

Member Point Loads (BLC 10 : LLr max (1)) (Continued)

	Member Label	Direction	Magnitude[k,k-ft]	Location[ft,%]
2	M4	Y	-.5	21.33

Member Point Loads (BLC 11 : LLr max (2))

	Member Label	Direction	Magnitude[k,k-ft]	Location[ft,%]
1	M4	Y	-7	21.33
2	M4	Y	-.5	1

Member Distributed Loads (BLC 1 : DL max (1))

	Member Label	Direction	Start Magnitude[k/ft,F]	End Magnitude[k/ft,F]	Start Location[ft,%]	End Location[ft,%]
1	M2	Y	-.316	-.316	0	%100
2	M4	Y	-.316	-.316	0	%100
3	M1	Y	-.115	-.115	0	%100
4	M3	Y	-.115	-.115	0	%100

Member Distributed Loads (BLC 2 : W1 wall and roof)

	Member Label	Direction	Start Magnitude[k/ft,F]	End Magnitude[k/ft,F]	Start Location[ft,%]	End Location[ft,%]
1	M1	X	-.071	-.071	0	%100
2	M3	X	.392	.392	0	%100
3	M2	Y	.58	.58	0	%100
4	M4	Y	.43	.43	0	%100

Member Distributed Loads (BLC 3 : W2 wall and roof)

	Member Label	Direction	Start Magnitude[k/ft,F]	End Magnitude[k/ft,F]	Start Location[ft,%]	End Location[ft,%]
1	M1	X	.444	.444	0	%100
2	M3	X	-.121	-.121	0	%100
3	M2	Y	.065	.065	0	%100
4	M4	Y	-.084	-.084	0	%100

Member Distributed Loads (BLC 4 : E)

	Member Label	Direction	Start Magnitude[k/ft,F]	End Magnitude[k/ft,F]	Start Location[ft,%]	End Location[ft,%]
1	M2	X	.027	.027	0	%100
2	M4	X	.027	.027	0	%100
3	M1	X	.012	.012	0	%100
4	M3	X	.012	.012	0	%100

Member Distributed Loads (BLC 6 : Lr roof)

	Member Label	Direction	Start Magnitude[k/ft,F]	End Magnitude[k/ft,F]	Start Location[ft,%]	End Location[ft,%]
1	M2	Y	-.383	-.383	0	%100
2	M4	Y	-.383	-.383	0	%100

Member Distributed Loads (BLC 7 : MIN DL (1))

	Member Label	Direction	Start Magnitude[k/ft,F]	End Magnitude[k/ft,F]	Start Location[ft,%]	End Location[ft,%]
1	M2	Y	-.077	-.077	0	%100
2	M4	Y	-.077	-.077	0	%100
3	M1	Y	-.077	-.077	0	%100
4	M3	Y	-.077	-.077	0	%100

Member Distributed Loads (BLC 8 : DL max (2))

	Member Label	Direction	Start Magnitude[k/ft,F]	End Magnitude[k/ft,F]	Start Location[ft,%]	End Location[ft,%]
1	M2	Y	-.316	-.316	0	%100
2	M4	Y	-.316	-.316	0	%100
3	M1	Y	-.115	-.115	0	%100
4	M3	Y	-.115	-.115	0	%100

Member Distributed Loads (BLC 9 : MIN DL (2))

	Member Label	Direction	Start Magnitude[k/ft,F]	End Magnitude[k/ft,F]	Start Location[ft,%]	End Location[ft,%]
1	M2	Y	-.077	-.077	0	%100
2	M4	Y	-.077	-.077	0	%100
3	M1	Y	-.077	-.077	0	%100
4	M3	Y	-.077	-.077	0	%100

Basic Load Cases

	BLC Description	Category	X Gravity	Y Gravity	Joint	Point	Distributed
1	DL max (1)	None		-1		2	4
2	W1 wall and roof	None			1		4
3	W2 wall and roof	None			1		4
4	E	None		-1	1		4
6	Lr roof	None					2
7	MIN DL (1)	None		-1		2	4
8	DL max (2)	None		-1		2	4
9	MIN DL (2)	None		-1			4
10	LLr max (1)	None				2	
11	LLr max (2)	None				2	

Load Combinations

	Description	So...	P...	S...	BLC	Fac...	BLC	Fac...	BLC	Fac...	BLC	Fac...	BLC	Fac...	BLC	Fac...	BLC	Fac...	BLC	Fac...
1	DL max 1 + Lr	Yes			1	1	6	1												
2	DL max 2 + Lr	Yes			8	1	6	1												
3	DL max 1 + Lr + LLr max 1	Yes			1	1	6	1	10	1										
4	DL max 2 + Lr + LLr max 2	Yes			8	1	6	1	11	1										
5	DL max 1 + 0.75 Lr + (0.6*0.75) W1 wall...	Yes			1	1	6	.75	2	.45										
6	DL max 2 + 0.75 Lr + (0.6*0.75) W1 wall...	Yes			8	1	6	.75	2	.45										
7	DL max 1 + 0.75 Lr + (0.6*0.75) W2 wall...	Yes			1	1	6	.75	3	.45										
8	DL max 2 + 0.75 Lr - (0.6*0.75) W2 wall ...	Yes			8	1	6	.75	3	.45										
9	DL max 1 + 0.75 Lr + (0.6*0.75) W1 wall...	Yes			1	1	6	.75	2	.45	10	.75								
10	DL max 2 + 0.75 Lr + (0.6*0.75) W1 wall...	Yes			8	1	6	.75	2	.45	11	.75								
11	DL max 1 + 0.75 Lr + (0.6*0.75) W2 wall...	Yes			1	1	6	.75	3	.45	10	.75								
12	DL max 2 + 0.75 Lr + (0.6*0.75) W2 wall...	Yes			8	1	6	.75	3	.45	11	.75								
13	DL max 1 + 0.6W1 wall and roof	Yes			1	1	2	.6												
14	DL max 2 + 0.6W1 wall and roof	Yes			8	1	2	.6												
15	DL max 1 + 0.6W2 wall and roof	Yes			1	1	3	.6												
16	DL max 2 + 0.6W2 wall and roof	Yes			8	1	3	.6												
17	0.6DL min 1 + 0.6W1 wall & roof	Yes			7	.6	2	.6												
18	0.6DL min 2 + 0.6W1 wall & roof	Yes			9	.6	2	.6												
19	0.6DL min 1 + 0.6W2 wall and roof	Yes			7	.6	3	.6												
20	0.6DL min 2 + 0.6W2 wall and roof	Yes			9	.6	3	.6												
21	(1+0.105Sds) DL max 1 + 0.75 Lr + 0.75...	Yes			1	1.026	6	.75	10	.75	4	.525								
22	(1+0.105Sds) DL max 2 + 0.75 Lr + 0.75...	Yes			8	1.026	6	.75	11	.75	4	.525								
23	0.6DL min 1 + 0.7E	Yes			7	.56	4	.7												
24	0.6DL min 2 + 0.7E	Yes			9	.56	4	.7												

Load Combination Design

	Description	ASIF	CD	ABIF	Service	Hot Rolled	Cold Form...	Wood	Concrete	Masonry	Footings	Aluminum
1	DL max 1 + Lr					Yes	Yes	Yes	Yes	Yes	Yes	Yes
2	DL max 2 + Lr					Yes	Yes	Yes	Yes	Yes	Yes	Yes
3	DL max 1 + L...					Yes	Yes	Yes	Yes	Yes	Yes	Yes
4	DL max 2 + L...					Yes	Yes	Yes	Yes	Yes	Yes	Yes
5	DL max 1 + 0...					Yes	Yes	Yes	Yes	Yes	Yes	Yes
6	DL max 2 + 0...					Yes	Yes	Yes	Yes	Yes	Yes	Yes

Load Combination Design (Continued)

	Description	ASIF	CD	ABIF	Service	Hot Rolled	Cold Form...	Wood	Concrete	Masonry	Footings	Aluminum
7	DL max 1 + 0..					Yes	Yes	Yes	Yes	Yes	Yes	Yes
8	DL max 2 + 0..					Yes	Yes	Yes	Yes	Yes	Yes	Yes
9	DL max 1 + 0..					Yes	Yes	Yes	Yes	Yes	Yes	Yes
10	DL max 2 + 0..					Yes	Yes	Yes	Yes	Yes	Yes	Yes
11	DL max 1 + 0..					Yes	Yes	Yes	Yes	Yes	Yes	Yes
12	DL max 2 + 0..					Yes	Yes	Yes	Yes	Yes	Yes	Yes
13	DL max 1 + 0..					Yes	Yes	Yes	Yes	Yes	Yes	Yes
14	DL max 2 + 0..					Yes	Yes	Yes	Yes	Yes	Yes	Yes
15	DL max 1 + 0..					Yes	Yes	Yes	Yes	Yes	Yes	Yes
16	DL max 2 + 0					Yes	Yes	Yes	Yes	Yes	Yes	Yes
17	0.6DL min 1 ...					Yes	Yes	Yes	Yes	Yes	Yes	Yes
18	0.6DL min 2 ...					Yes	Yes	Yes	Yes	Yes	Yes	Yes
19	0.6DL min 1 ...					Yes	Yes	Yes	Yes	Yes	Yes	Yes
20	0.6DL min 2 ...					Yes	Yes	Yes	Yes	Yes	Yes	Yes
21	(1+0.105Sds)..					Yes	Yes	Yes	Yes	Yes	Yes	Yes
22	(1+0 105Sds).					Yes	Yes	Yes	Yes	Yes	Yes	Yes
23	0.6DL min 1 ...					Yes	Yes	Yes	Yes	Yes	Yes	Yes
24	0.6DL min 2 ...					Yes	Yes	Yes	Yes	Yes	Yes	Yes

Joint Reactions

	LC	Joint Label	X [k]	Y [k]	MZ [k-ft]
1	1	N1	12.131	24.369	0
2	1	N4	-12.131	25.8	0
3	1	Totals:	0	50.168	
4	1	COG (ft):	X: 25.713	Y: 20.489	

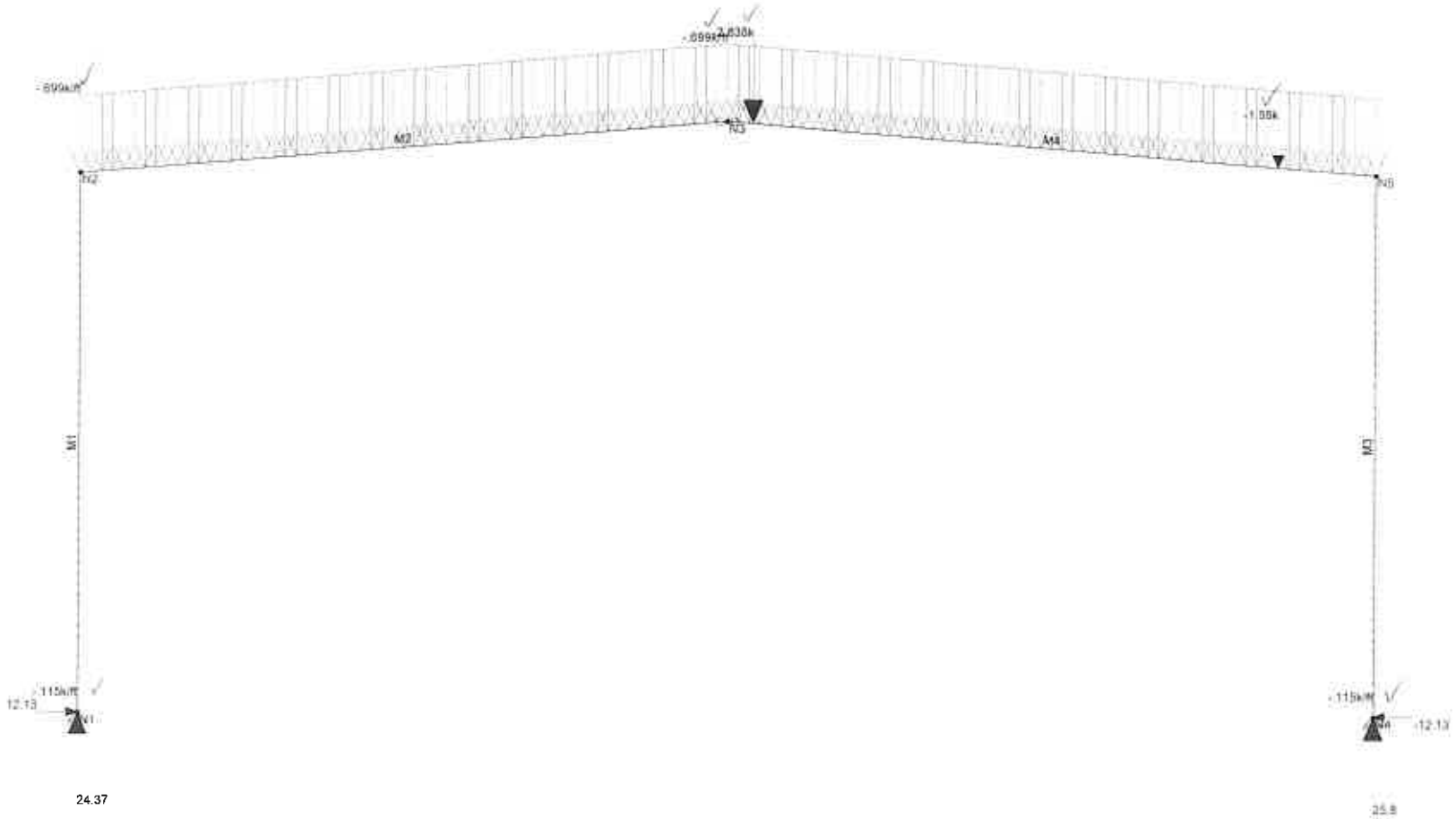

Loads: LC 1, DL max 1 + Lr
Results for LC 1, DL max 1 + Lr
Z-moment Reaction units are k and k-ft

ARCADIS		SK - 15
Matt Ltoycz	Topok Workshop Building	Jan 5, 2015 at 4:06 PM
		Typical Frame.r2d

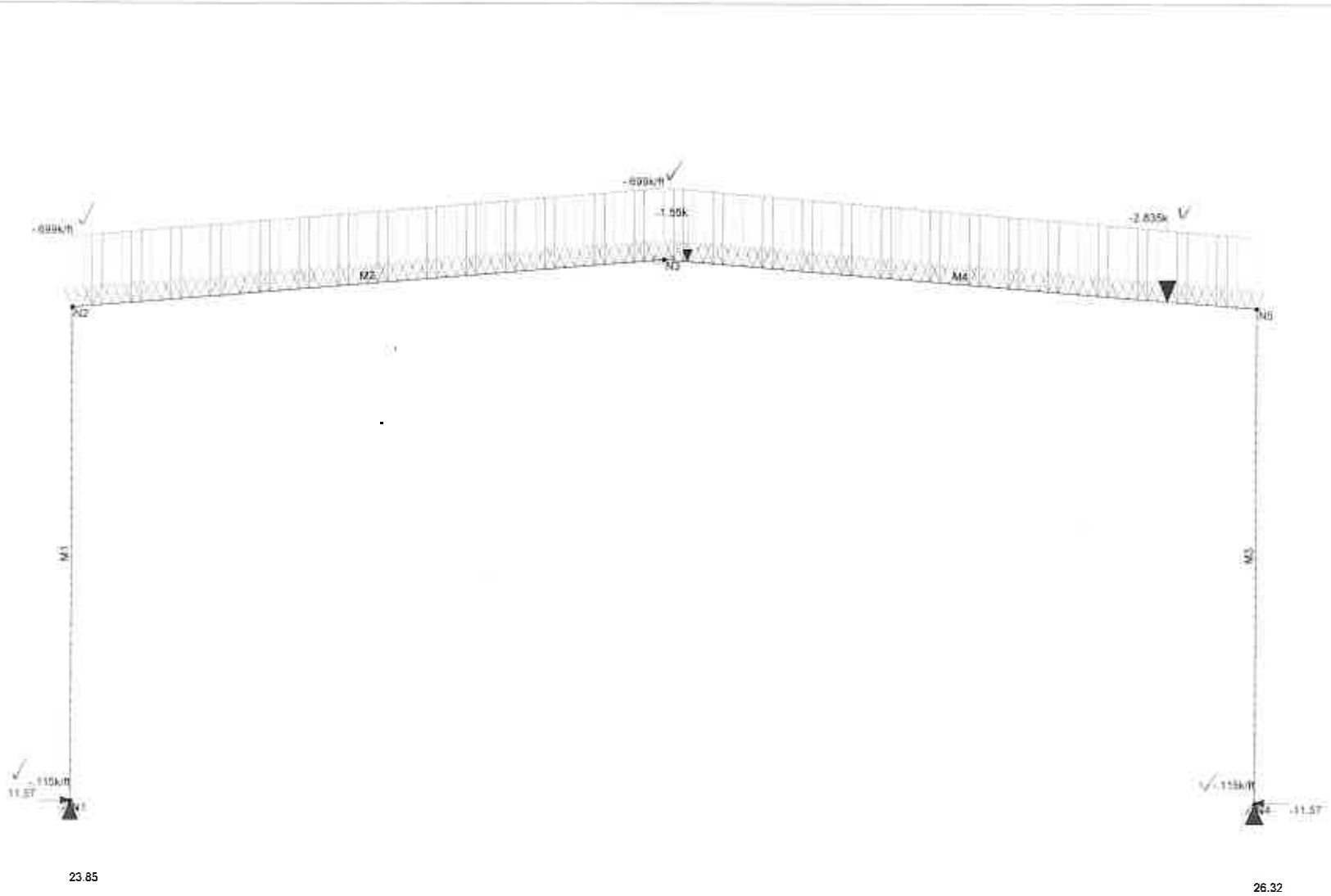

Loads: LC 2, DL max 2 + Lr
Results for LC 2, DL max 2 + Lr
Z-moment Reaction units are k and k-ft

ARCADIS		SK - 16
Matt Ltoycz	Topok Workshop Building	Jan 5, 2015 at 4:06 PM
		Typical Frame.r2d

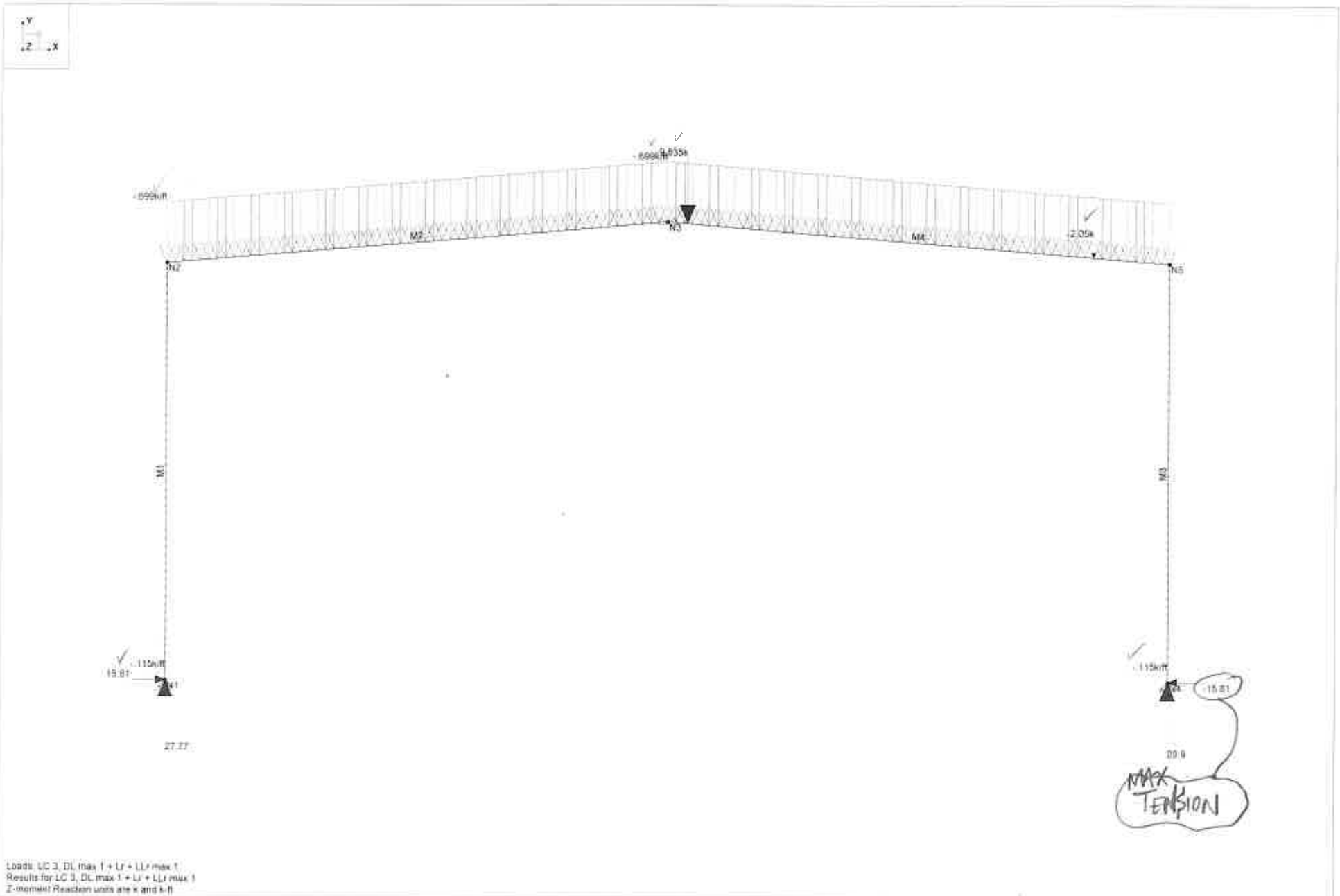

Loads: LC 3, DL max 1 + Lr + LLr max 1
Results for LC 3, DL max 1 + Lr + LLr max 1
Z-moment Reaction units are k and k-ft

ARCADIS		SK - 17
Matt Ltoycz	Topok Workshop Building	Jan 5, 2015 at 4:06 PM
		Typical Frame.r2d

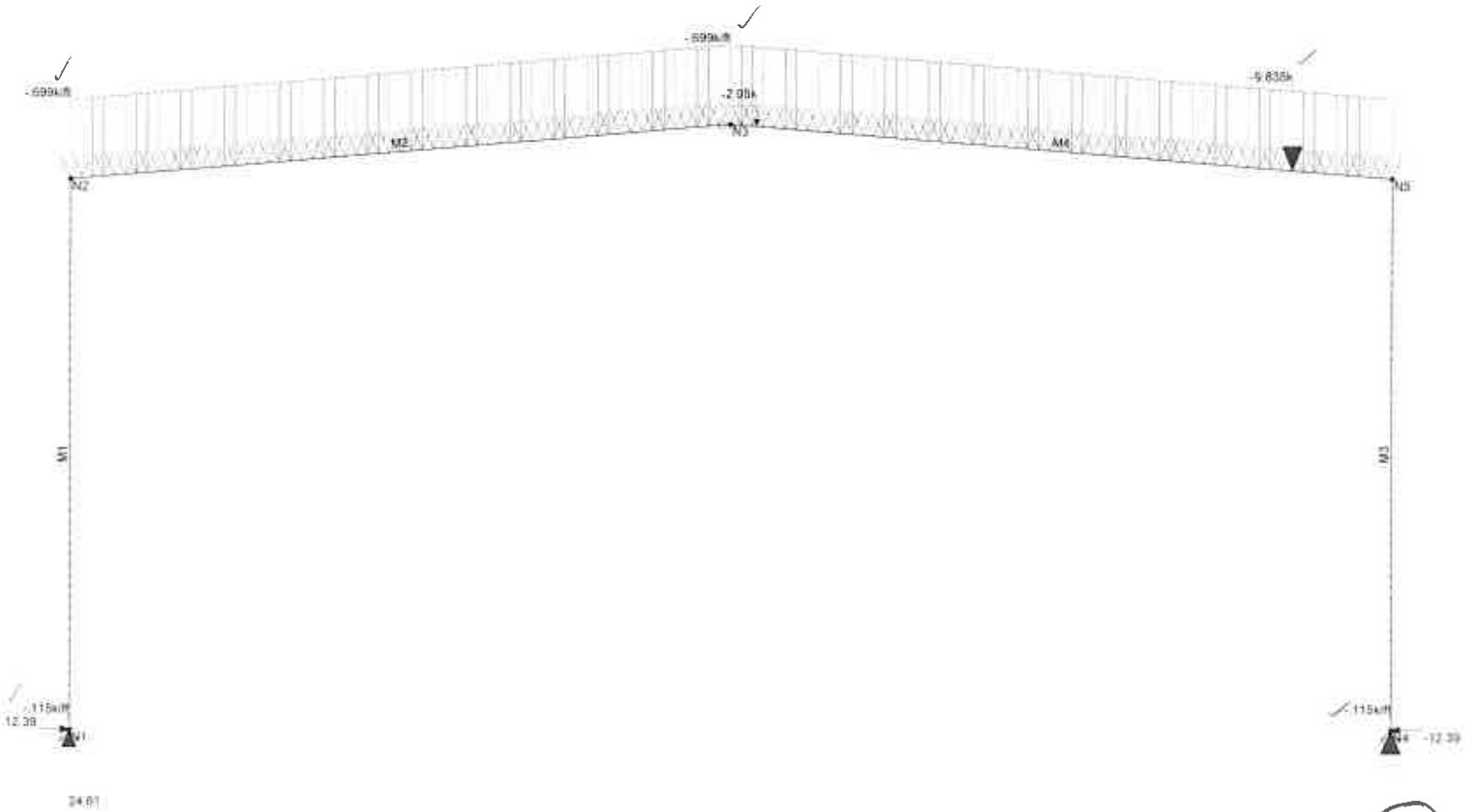

33.06

MAX GRAVITY

Loads: LC 4, DL max 2 + Lr + LLr max 2
Results for LC 4, DL max 2 + Lr + LLr max 2
Z-moment Reaction units are k and k-ft

ARCADIS		SK - 18
Matt Ltoycz	Topok Workshop Building	Jan 5, 2015 at 4:06 PM
		Typical Frame.r2d

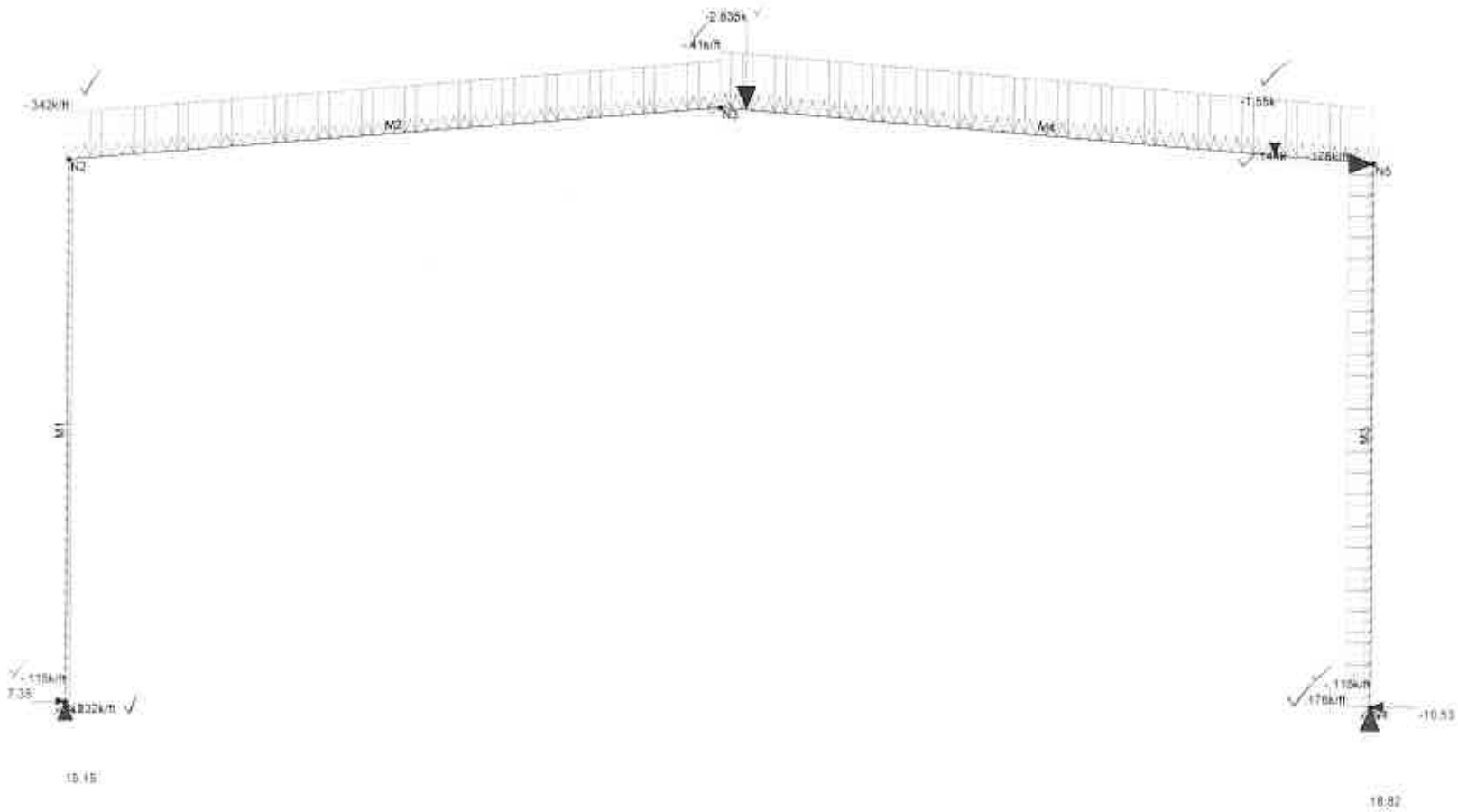

Loads: LC 5: DL max 1 + 0.75 Lr + (0.6*0.75) W1 wall & roof
Results for LC 5: DL max 1 + 0.75 Lr + (0.6*0.75) W1 wall & roof
Z-moment Reaction units are k and k-ft

ARCADIS	Topok Workshop Building	SK - 19
Matt Ltoycz		Jan 5, 2015 at 4:07 PM
		Typical Frame.r2d

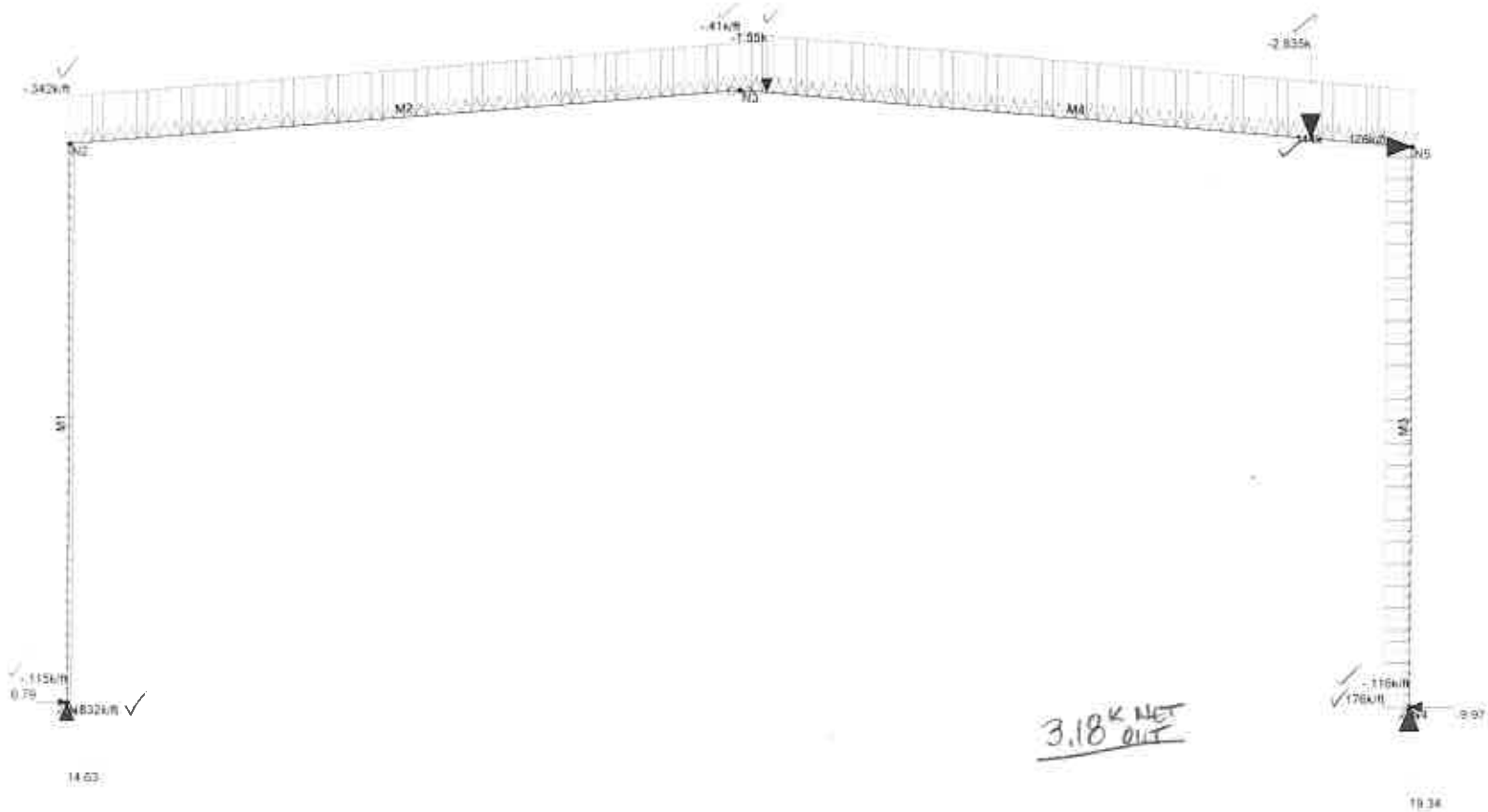

Loads: LC 6, DL max 2 + 0.75 Lr + (0.6*0.75) W1 wall & roof
Results for LC 6, DL max 2 + 0.75 Lr + (0.6*0.75) W1 wall & roof
Z-moment Reaction units are k and k-ft

ARCADIS	Topok Workshop Building	SK - 20
Matt Ltoycz		Jan 5, 2015 at 4:07 PM
		Typical Frame.r2d

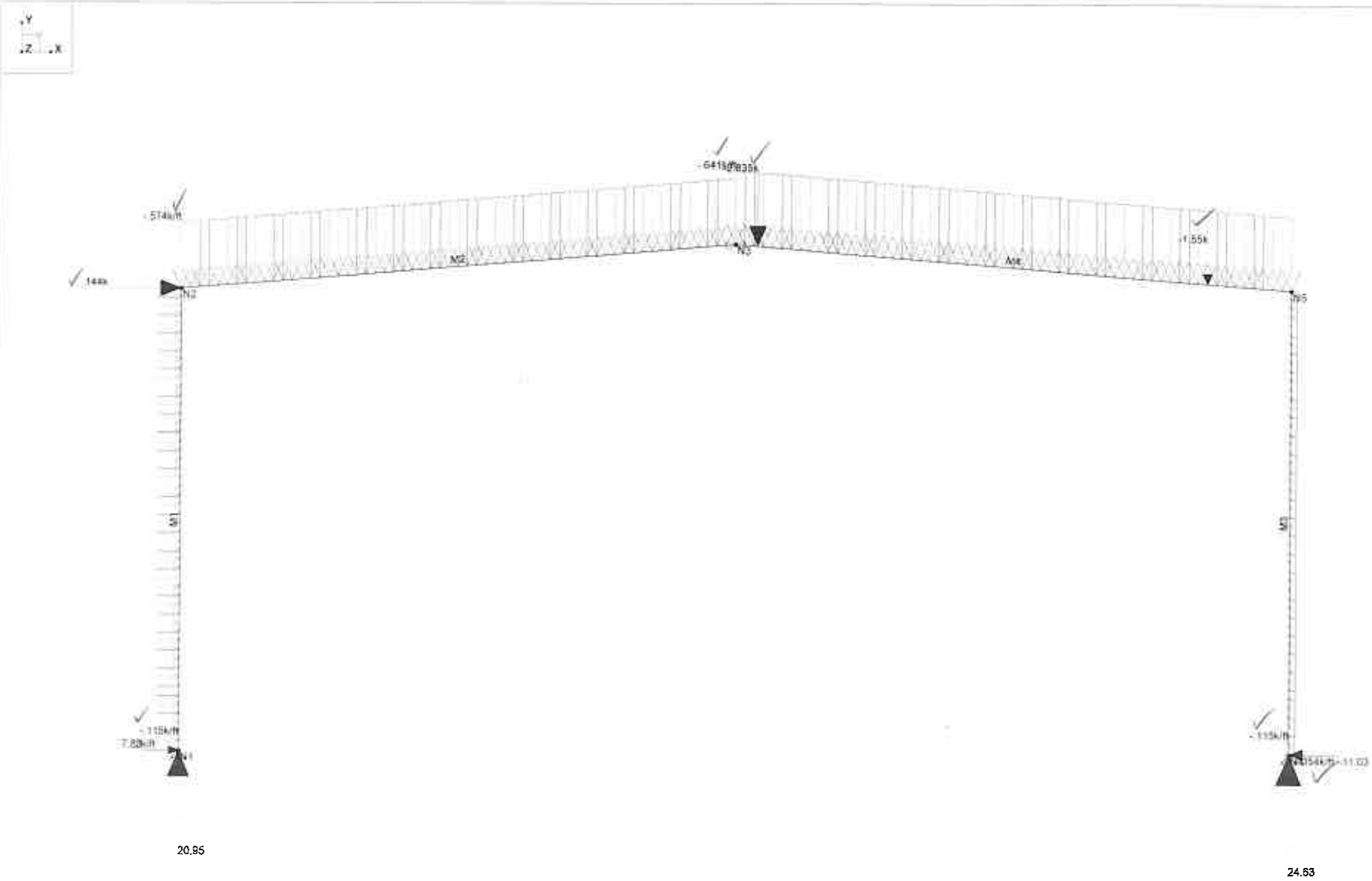

Loads: LC 7, DL max 1 + 0.75 Lr + (0.6*0.75) W2 wall and roof
Results for LC 7, DL max 1 + 0.75 Lr + (0.6*0.75) W2 wall and roof
Z-moment Reaction units are k and k-ft

ARCADIS	Topok Workshop Building	SK - 21
Matt Ltoycz		Jan 5, 2015 at 4:08 PM
		Typical Frame r2d

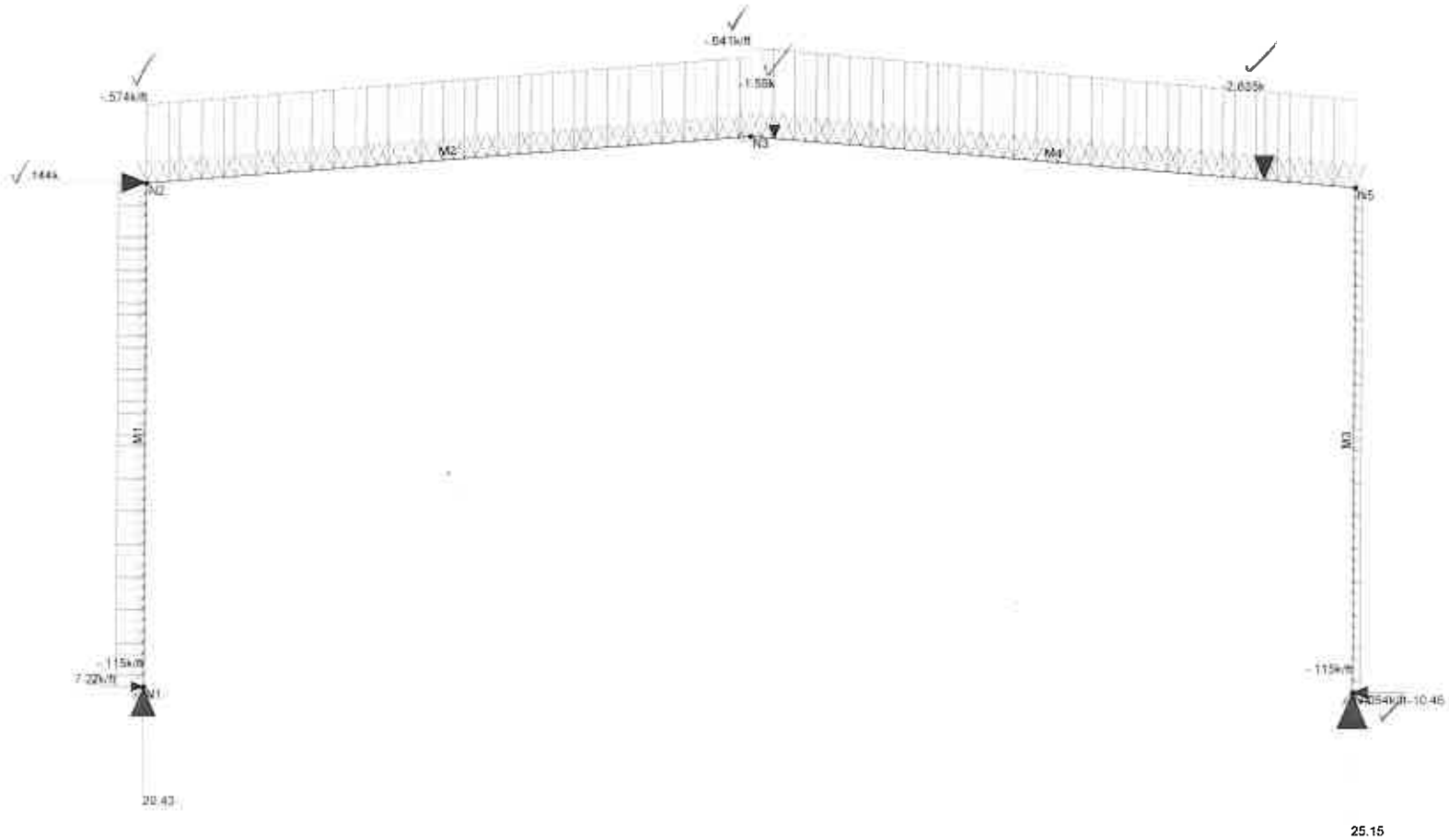

Loads: LC 8, DL max 2 + 0.75 Lr - (0.6*0.75) W2 wall and roof
Results for LC 8, DL max 2 + 0.75 Lr - (0.6*0.75) W2 wall and roof
Z-moment Reaction units are k and k-ft

ARCADIS		SK - 22
Matt Ltoycz	Topok Workshop Building	Jan 5, 2015 at 4:08 PM
		Typical Frame.r2d

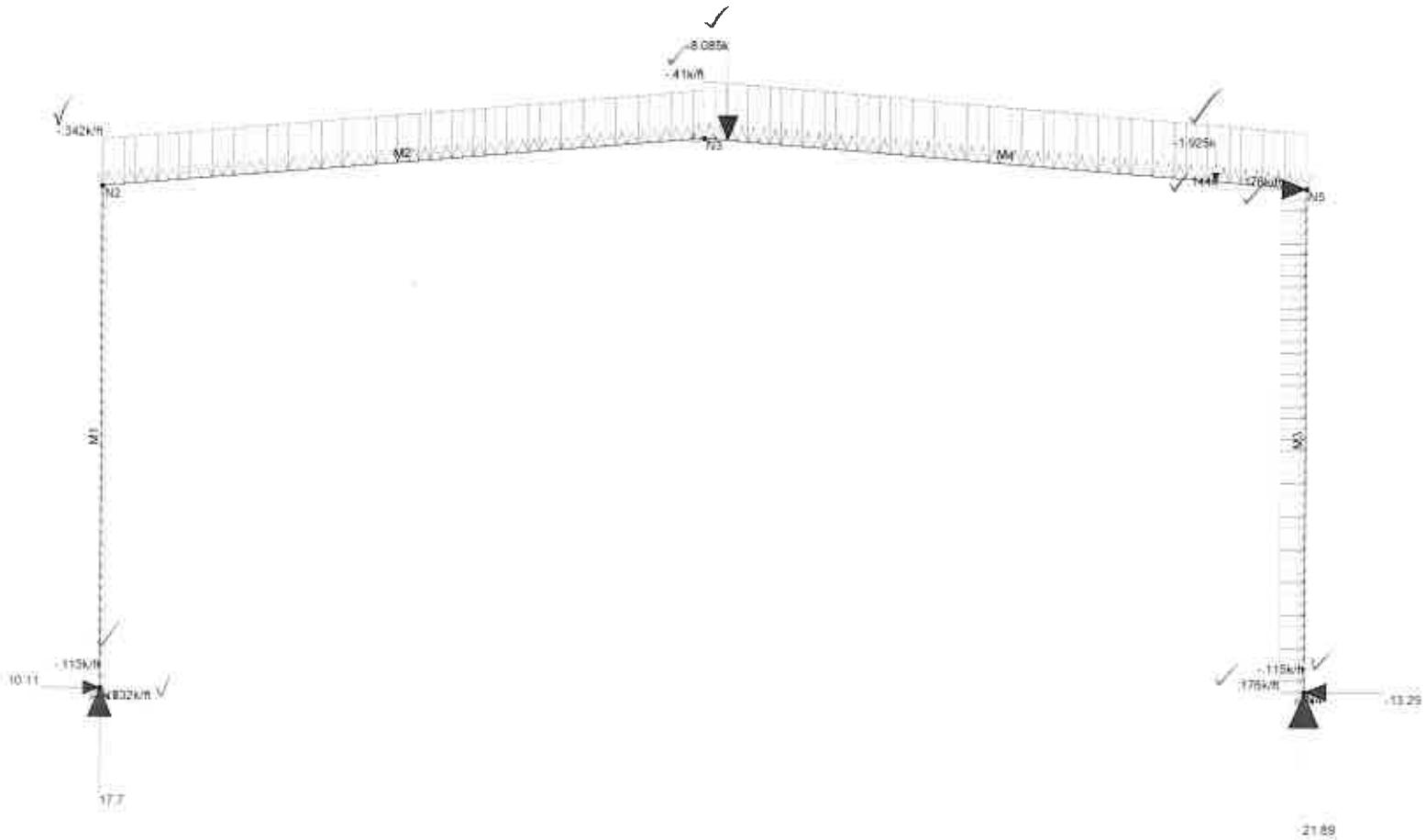

Loads: LC 9, DL max 1 + 0.75 Lr + (0.6*0.75) W1 wall & roof + 0.75 LLr max 1
Results for LC 9, DL max 1 + 0.75 Lr + (0.6*0.75) W1 wall & roof + 0.75 LLr max 1
Z-moment Reaction units are k and k-ft

ARCADIS		SK - 23
Matt Ltoycz	Topok Workshop Building	Jan 5, 2015 at 4:10 PM
		Typical Frame r2d

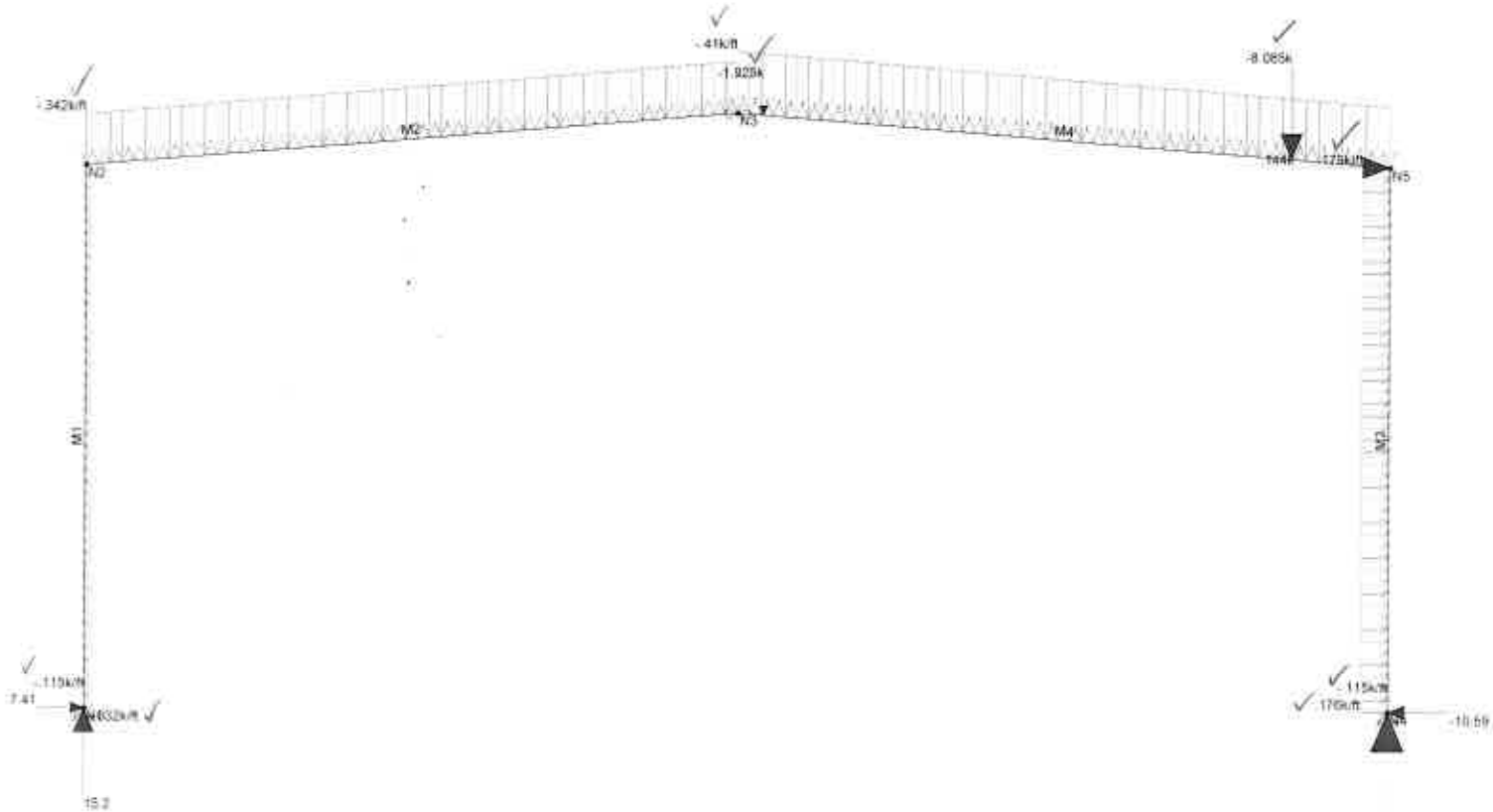

24.39

Loads: LC 10, DL max 2 + 0.75 Lr + (0.6*0.75) W1 wall & roof + 0.75 LLr max 2
Results for LC 10, DL max 2 + 0.75 Lr + (0.6*0.75) W1 wall & roof + 0.75 LLr max 2
Z-moment Reaction units are k and k-ft

ARCADIS	Topok Workshop Building	SK - 24
Matt Ltoycz		Jan 5, 2015 at 4:11 PM
		Typical Frame.r2d

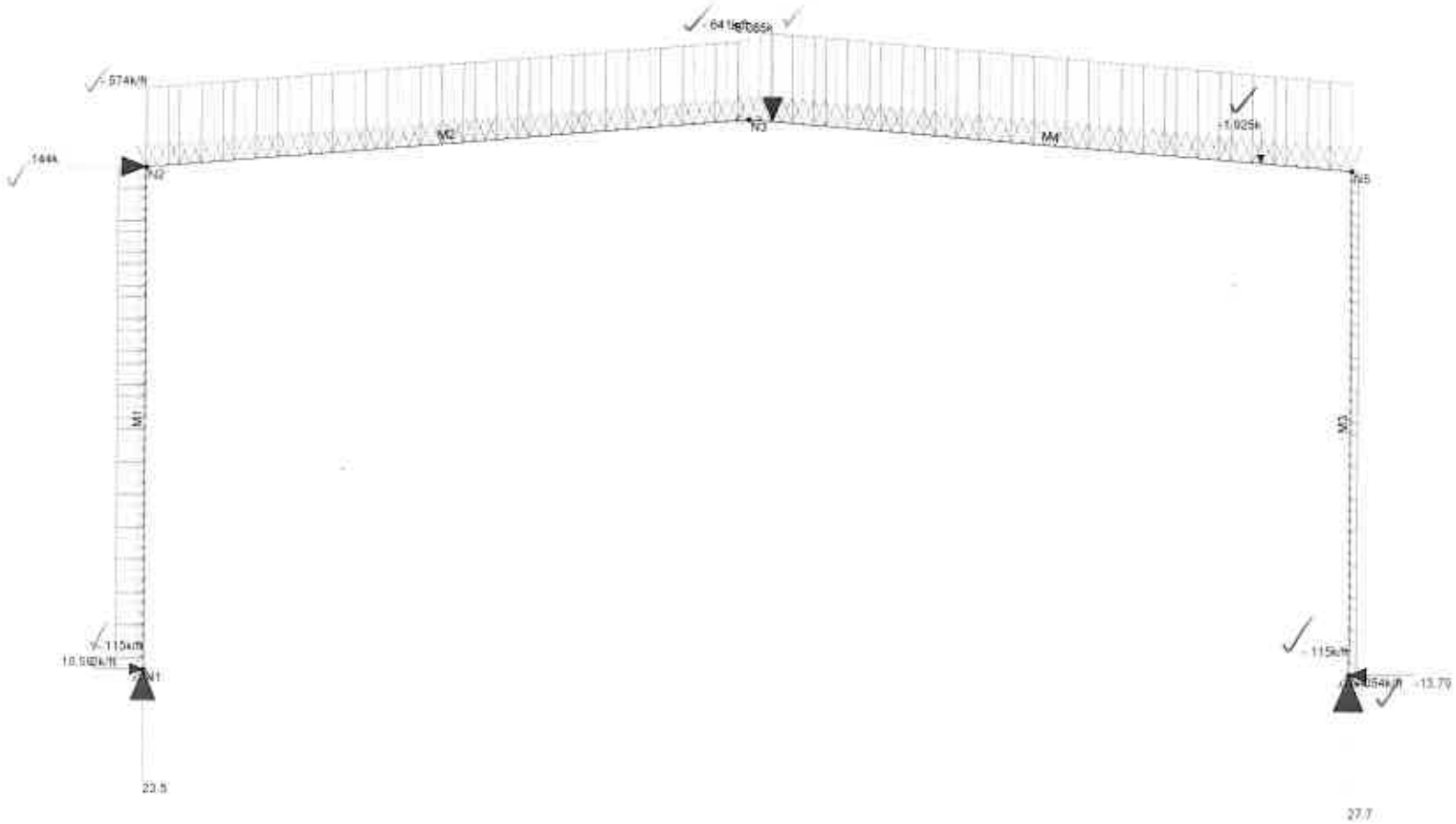

Loads: LC 11, DL max 1 + 0.75 Lr + (0.6*0.75) W2 wall & roof + 0.75 LLr max 1
Results for LC 11, DL max 1 + 0.75 Lr + (0.6*0.75) W2 wall & roof + 0.75 LLr max 1
Z-moment Reaction units are k and k-ft

ARCADIS		SK - 25
Matt Ltoycz	Topok Workshop Building	Jan 5, 2015 at 4:11 PM
		Typical Frame.r2d

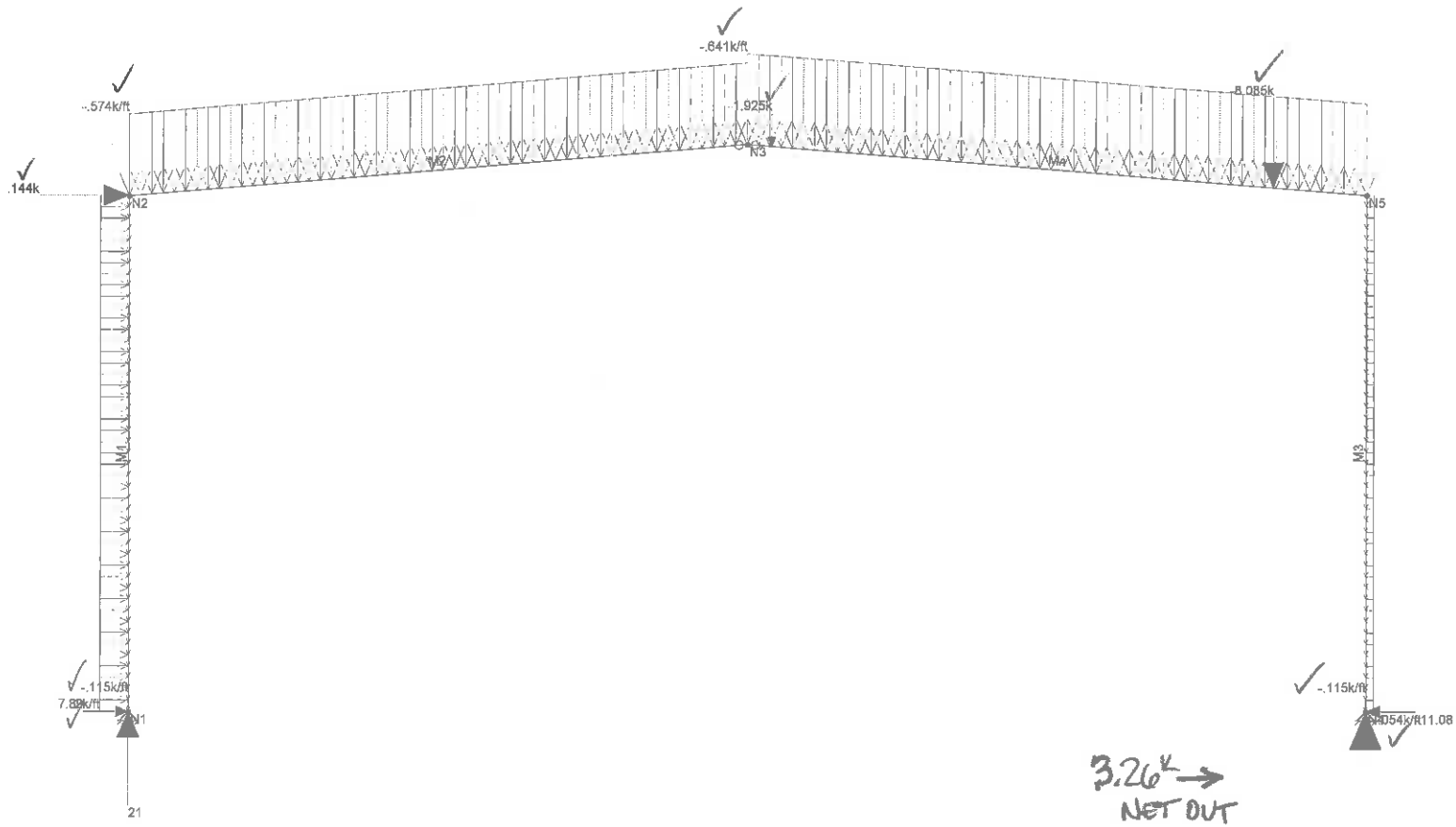

Loads: LC 12, DL max 2 + 0.75 Lr + (0.6*0.75) W2 wall & roof + 0.75 LLr max 2
Results for LC 12, DL max 2 + 0.75 Lr + (0.6*0.75) W2 wall & roof + 0.75 LLr max 2
Z-moment Reaction units are k and k-ft

ARCADIS		SK - 26
Matt Ltoycz	Topok Workshop Building	Jan 5, 2015 at 4:11 PM
		Typical Frame.r2d

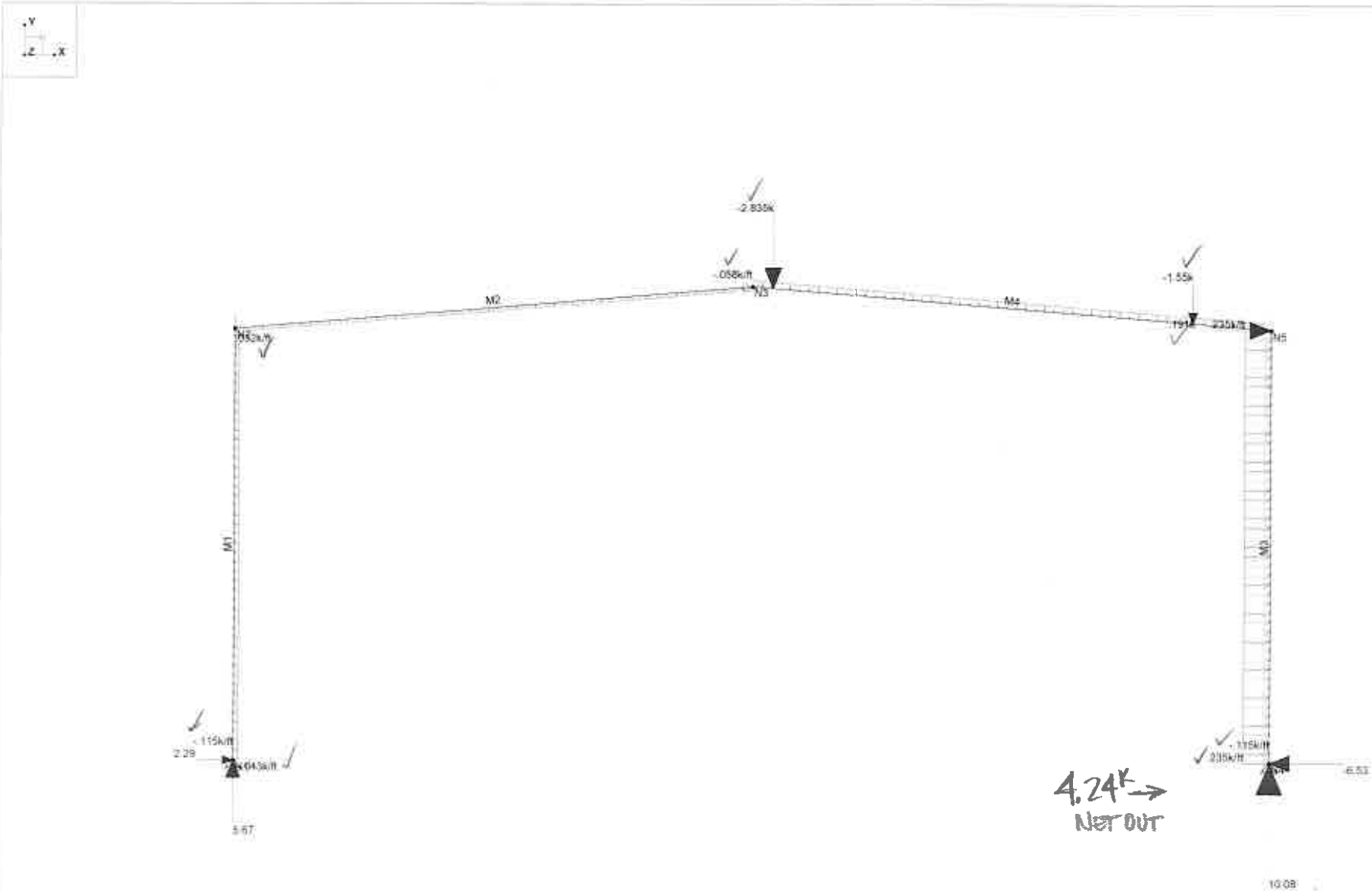

Loads: LC 13, DL max 1 + 0.6W1 wall and roof
Results for LC 13, DL max 1 + 0.6W1 wall and roof
Z-moment Reaction units are k and k/ft

ARCADIS		SK - 27
Matt Ltoycz	Topok Workshop Building	Jan 5, 2015 at 4:11 PM
		Typical Frame.r2d

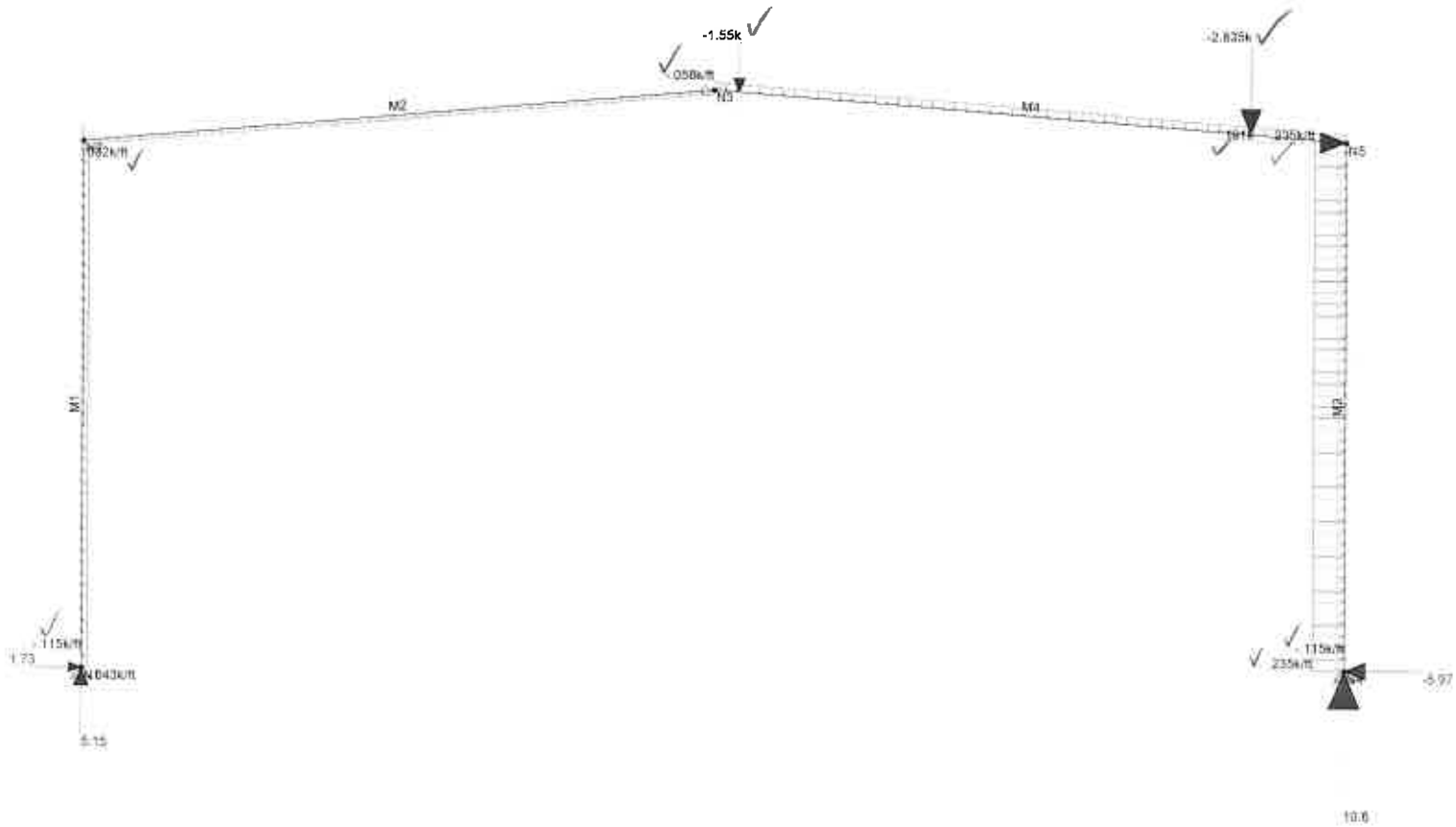

Loads: LC 14, DL max 2 + 0.6W1 wall and roof
Results for LC 14, DL max 2 + 0.6W1 wall and roof
Z-moment Reaction units are k and k-ft

ARCADIS	Topok Workshop Building	SK - 28
Matt Ltoycz		Jan 5, 2015 at 4:11 PM
		Typical Frame.r2d

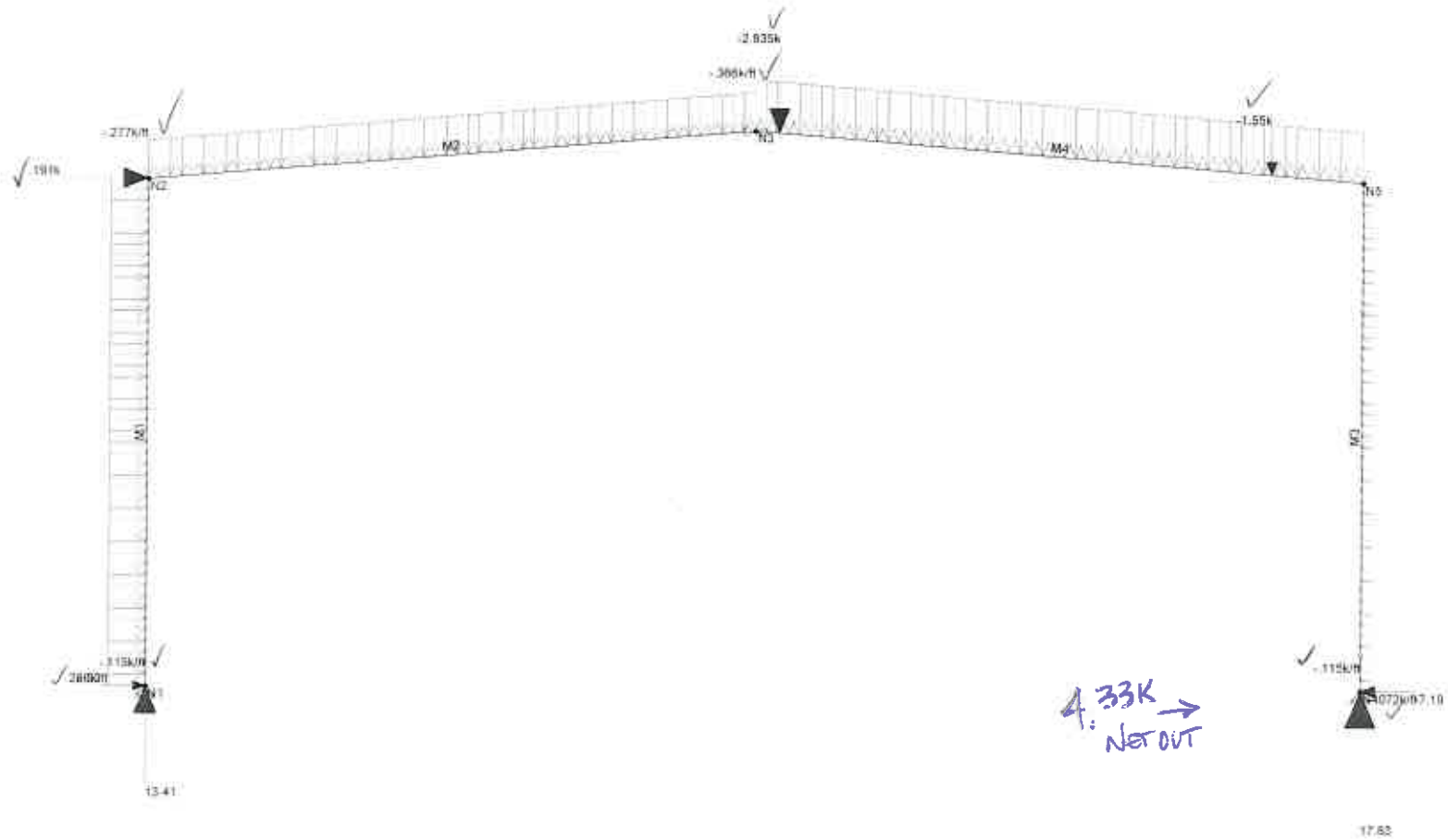

Loads: LC 15, DL max 1 + 0.6W2 wall and roof
Results for LC 15, DL max 1 + 0.6W2 wall and roof
Z-Inplane Reaction units are k and k-ft

ARCADIS	Topok Workshop Building	SK - 29
Matt Ltoycz		Jan 5, 2015 at 4:12 PM
		Typical Frame.r2d

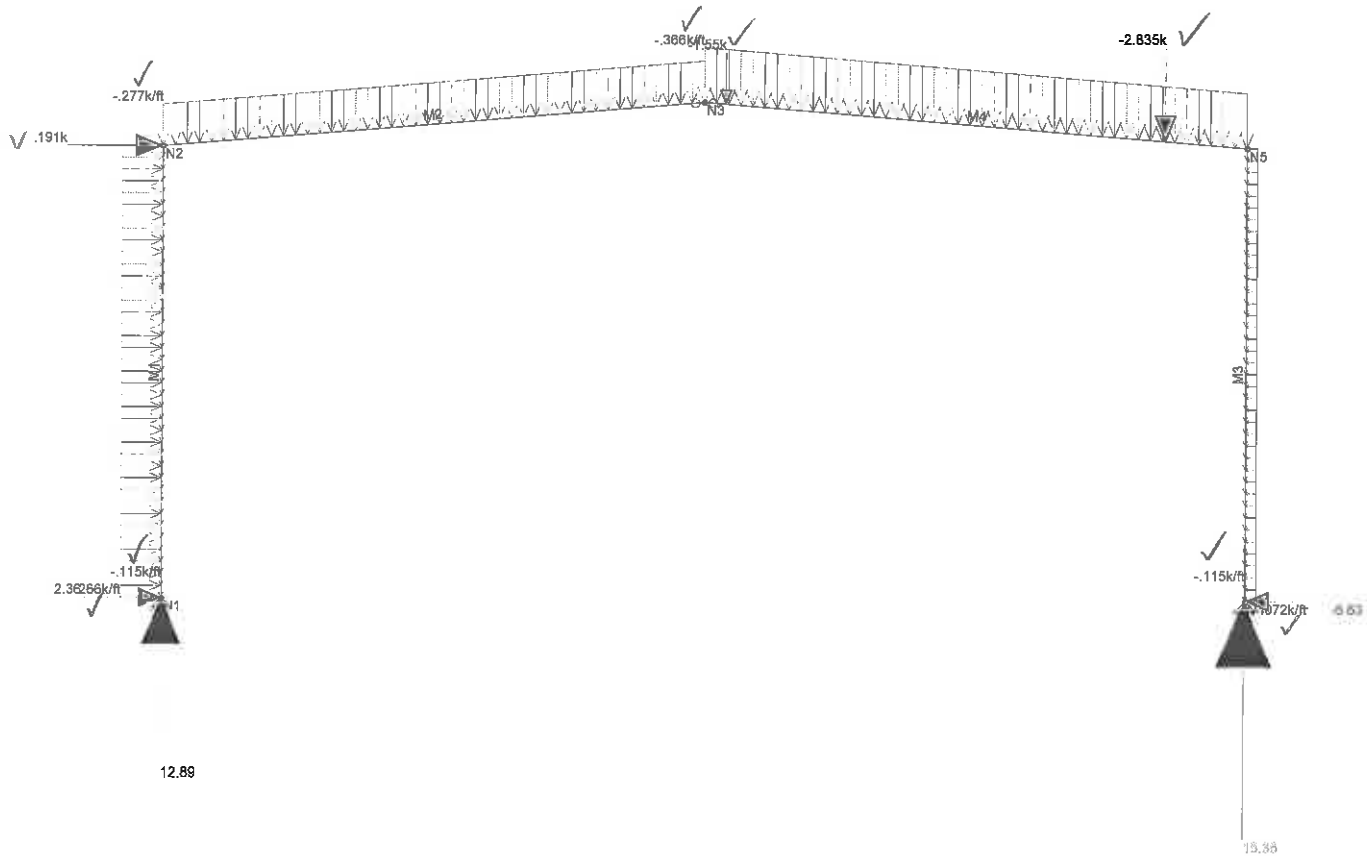

Loads: LC 16, DL max 2 + 0.6W2 wall and roof
Results for LC 16, DL max 2 + 0.6W2 wall and roof
Z-moment Reaction units are k and k-ft

ARCADIS		SK - 30
Matt Ltoycz	Topok Workshop Building	Jan 5, 2015 at 4:12 PM
		Typical Frame.r2d

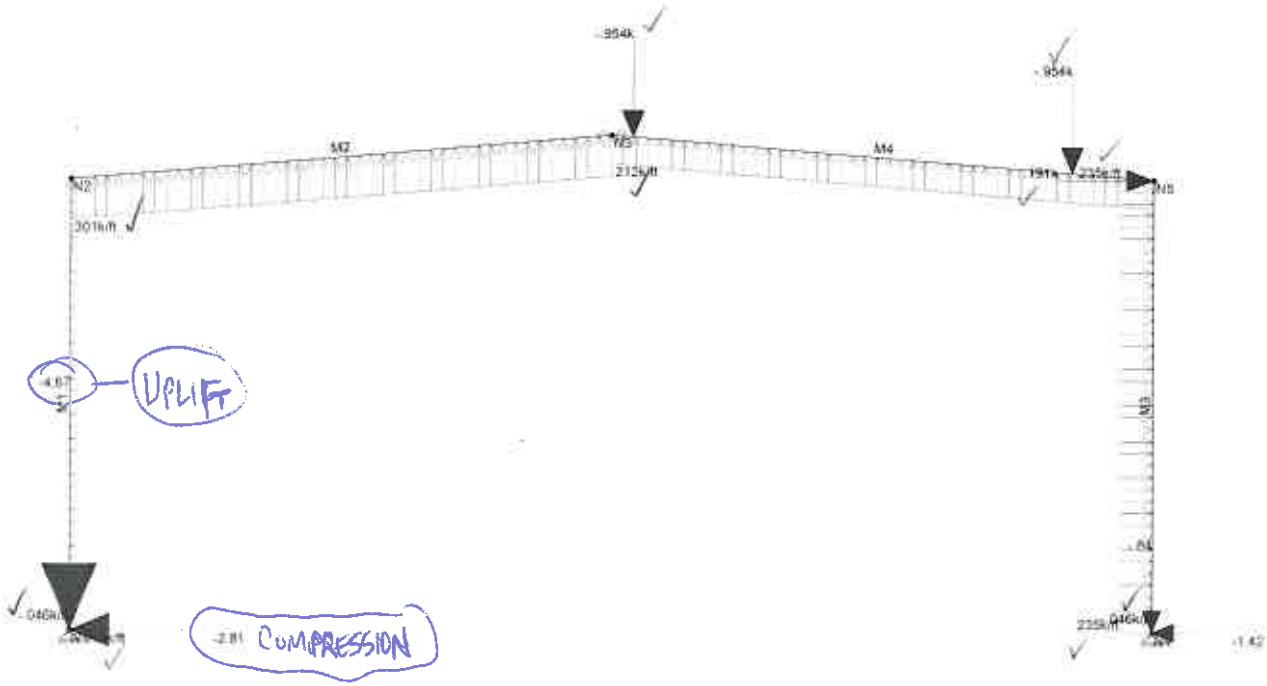

Loads: LC 17, 0.6DL min 1 + 0.6W1 wall & roof
Results for LC 17, 0.6DL min 1 + 0.6W1 wall & roof
Z-moment Reaction units are k and k-ft

ARCADIS	Topok Workshop Building	SK - 31
Matt Ltoycz		Jan 5, 2015 at 4:13 PM
		Typical Frame.r2d

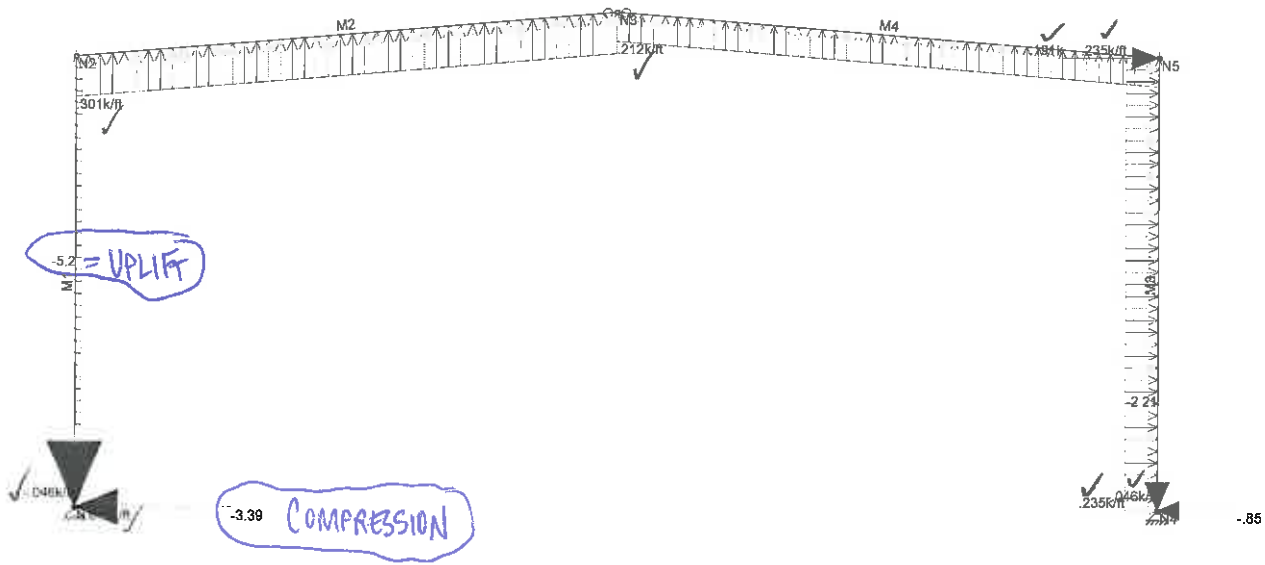

Loads: LC 18, 0.6DL min 2 + 0.6Wt wall & roof
Results for LC 18, 0.6DL min 2 + 0.6Wt wall & roof
Z-moment Reaction units are k and k-ft

ARCADIS	Topok Workshop Building	SK - 32
Matt Ltoycz		Jan 5, 2015 at 4:13 PM
		Typical Frame.r2d

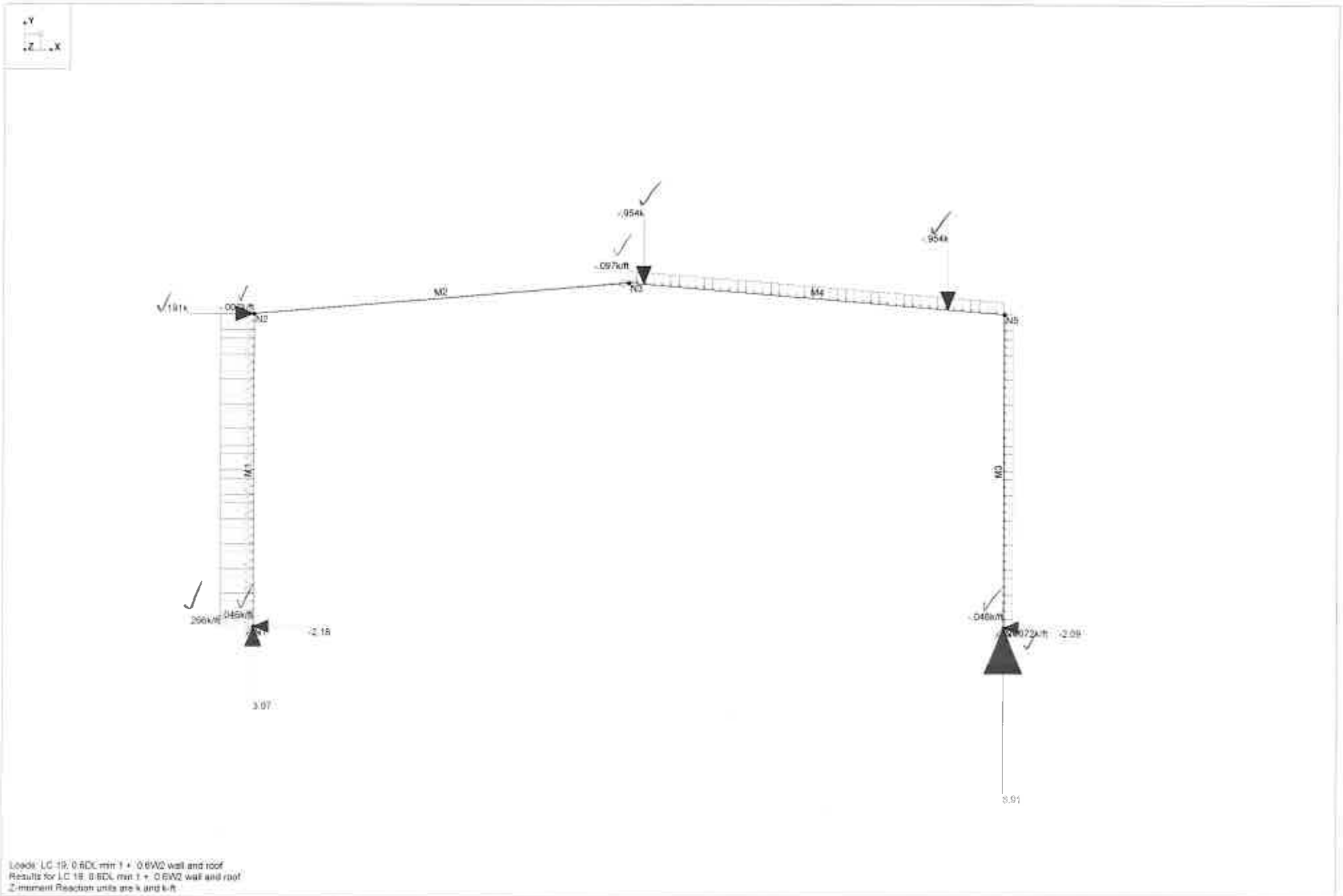

Loads: LC 19, 0.6DL min 1 + 0.6W2 wall and roof
Results for LC 19, 0.6DL min 1 + 0.6W2 wall and roof
Z-moment Reaction units are k and k-ft

ARCADIS		SK - 33
Matt Ltoycz	Topok Workshop Building	Jan 5, 2015 at 4:13 PM
		Typical Frame.r2d

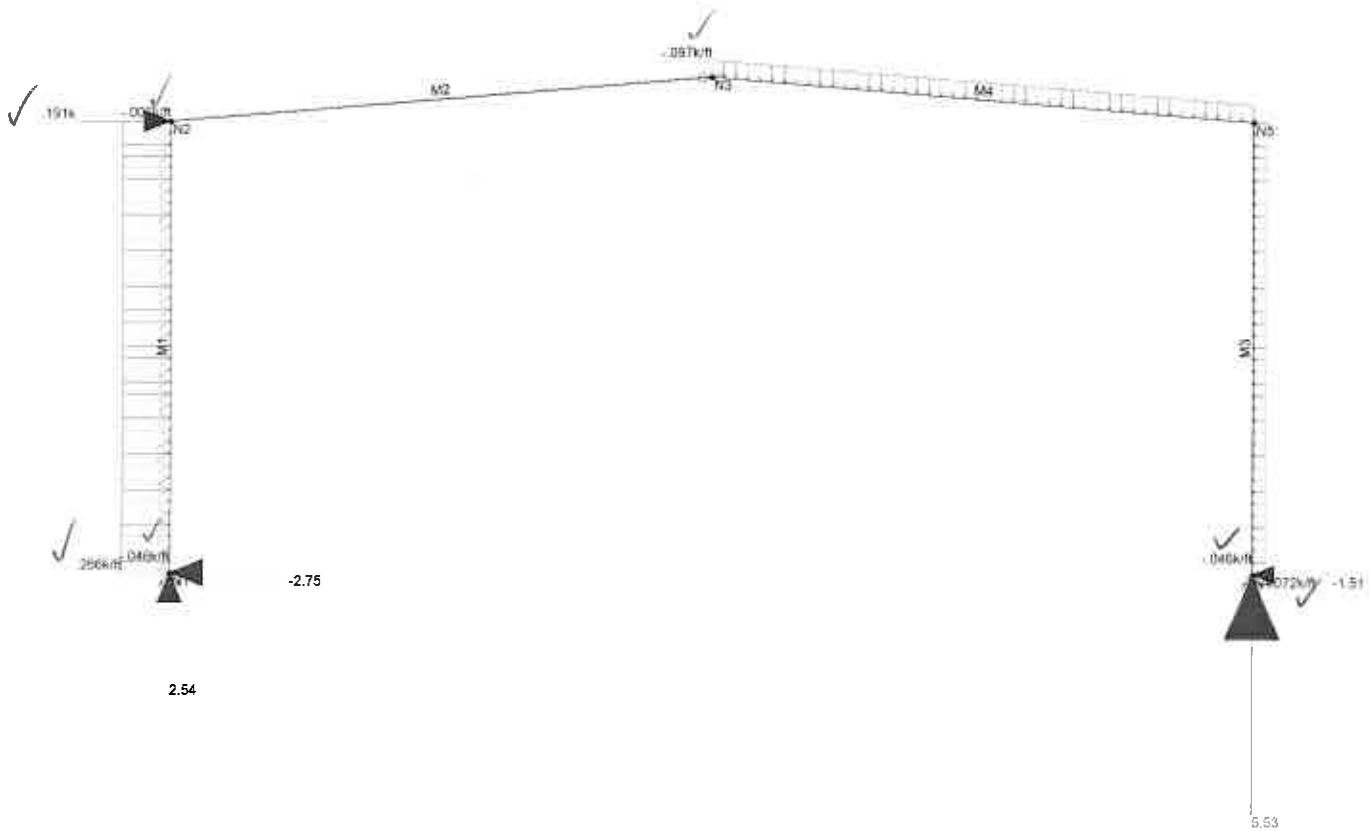

Loads: LC 20, 0.6DL min 2 + 0.6W2 wall and roof
Results for LC 20, 0.6DL min 2 + 0.6W2 wall and roof
Z-moment Reaction units are k and k-ft

ARCADIS		SK - 34
Matt Ltoycz	Topok Workshop Building	Jan 5, 2015 at 4:14 PM
		Typical Frame.r2d

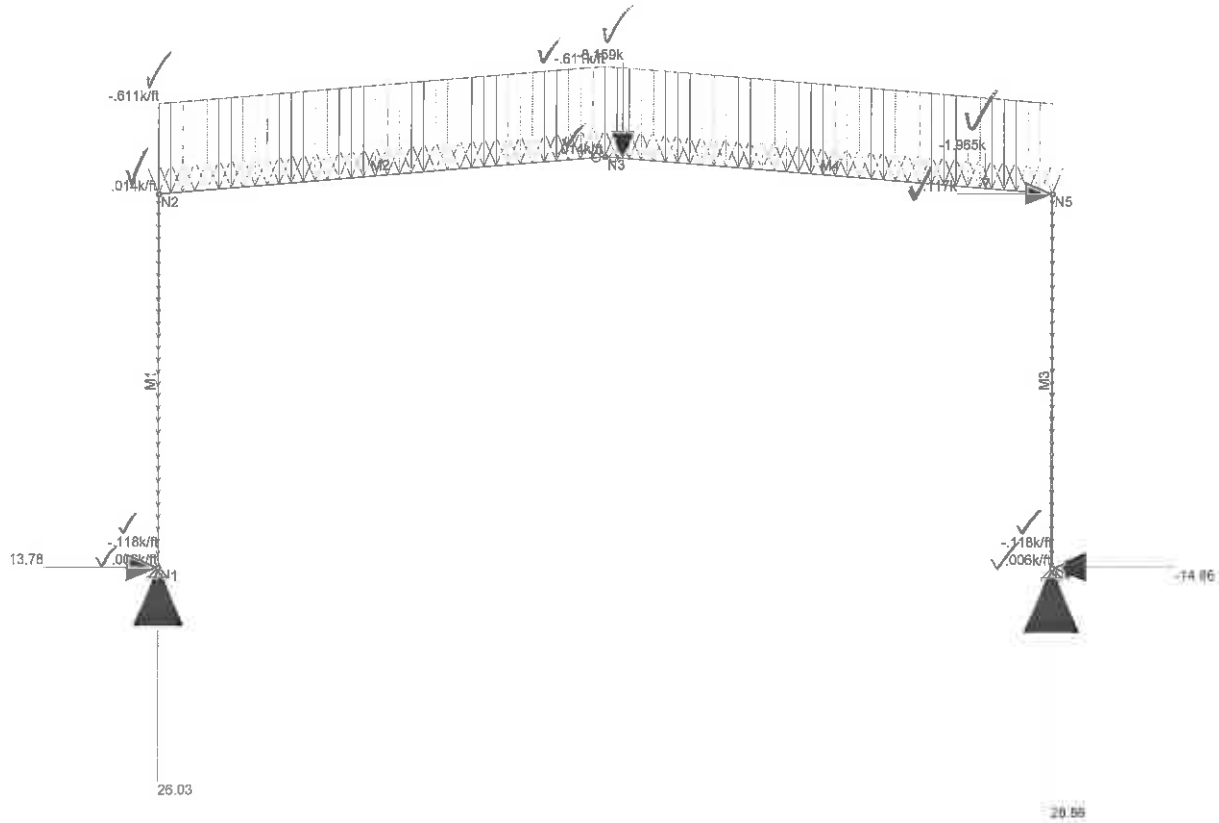

Loads: LC 21, (1+0.105Sds) DL max 1 + 0.75 Lr + 0.75 LLr max 1 + 0.525E
Results for LC 21, (1+0.105Sds) DL max 1 + 0.75 Lr + 0.75 LLr max 1 + 0.525E
Z-moment Reaction units are k and k-ft

ARCADIS		SK - 35
Matt Ltoycz	Topok Workshop Building	Jan 5, 2015 at 4:14 PM
		Typical Frame.r2d

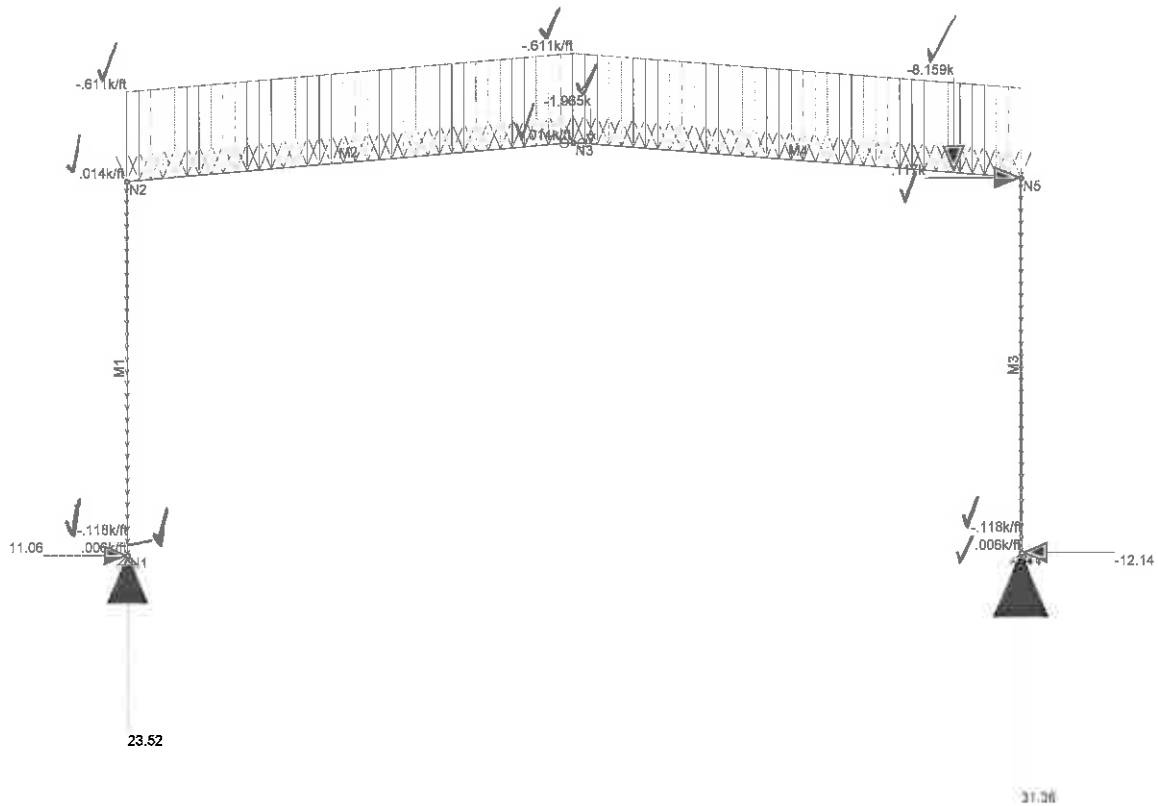

Loads: LC 22, (1+0.105Sds) DL max 2 + 0.75 Lr + 0.75 LLr max 2 + 0.525E
Results for LC 22, (1+0.105Sds) DL max 2 + 0.75 Lr + 0.75 LLr max 2 + 0.525E
Z-moment Reaction units are k and k-ft

ARCADIS		SK - 36
Matt Ltoycz	Topok Workshop Building	Jan 5, 2015 at 4:14 PM
		Typical Frame.r2d

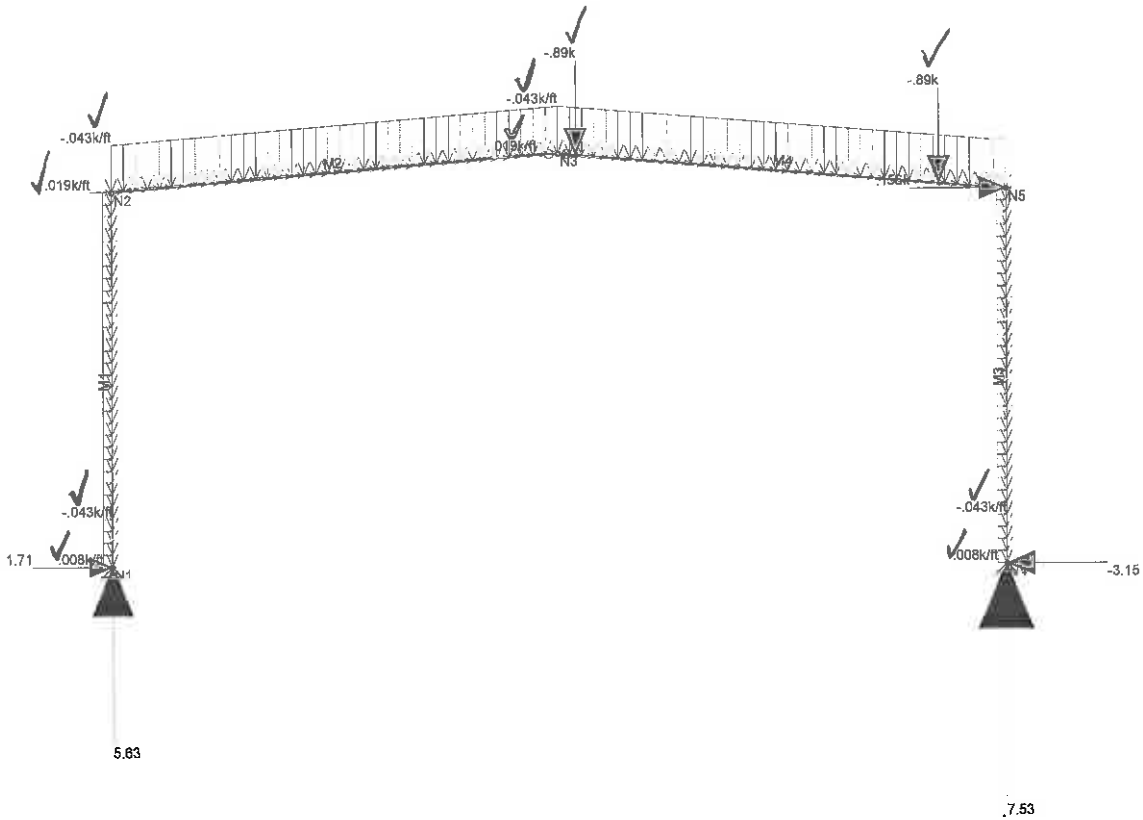

Loads: LC 23, 0.6DL min 1 + 0.7E
Results for LC 23, 0.6DL min 1 + 0.7E
Z-moment Reaction units are k and k-ft

ARCADIS	Topok Workshop Building	SK - 37
Matt Ltoycz		Jan 5, 2015 at 4:14 PM
		Typical Frame.r2d

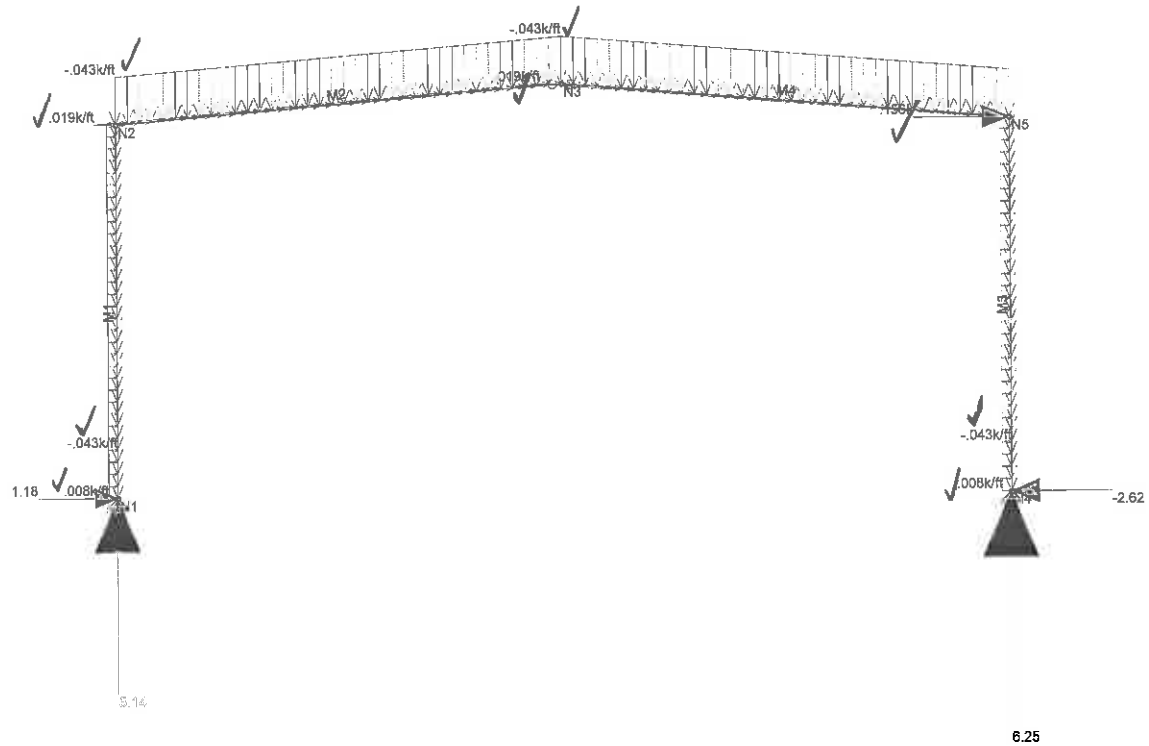

Loads: LC 24, 0.60L min 2 + 0.7E
Results for LC 24, 0.60L min 2 + 0.7E
Z-moment Reaction units are k and k-ft

ARCADIS	Topok Workshop Building	SK - 38
Matt Ltoycz		Jan 5, 2015 at 4:14 PM
		Typical Frame.r2d

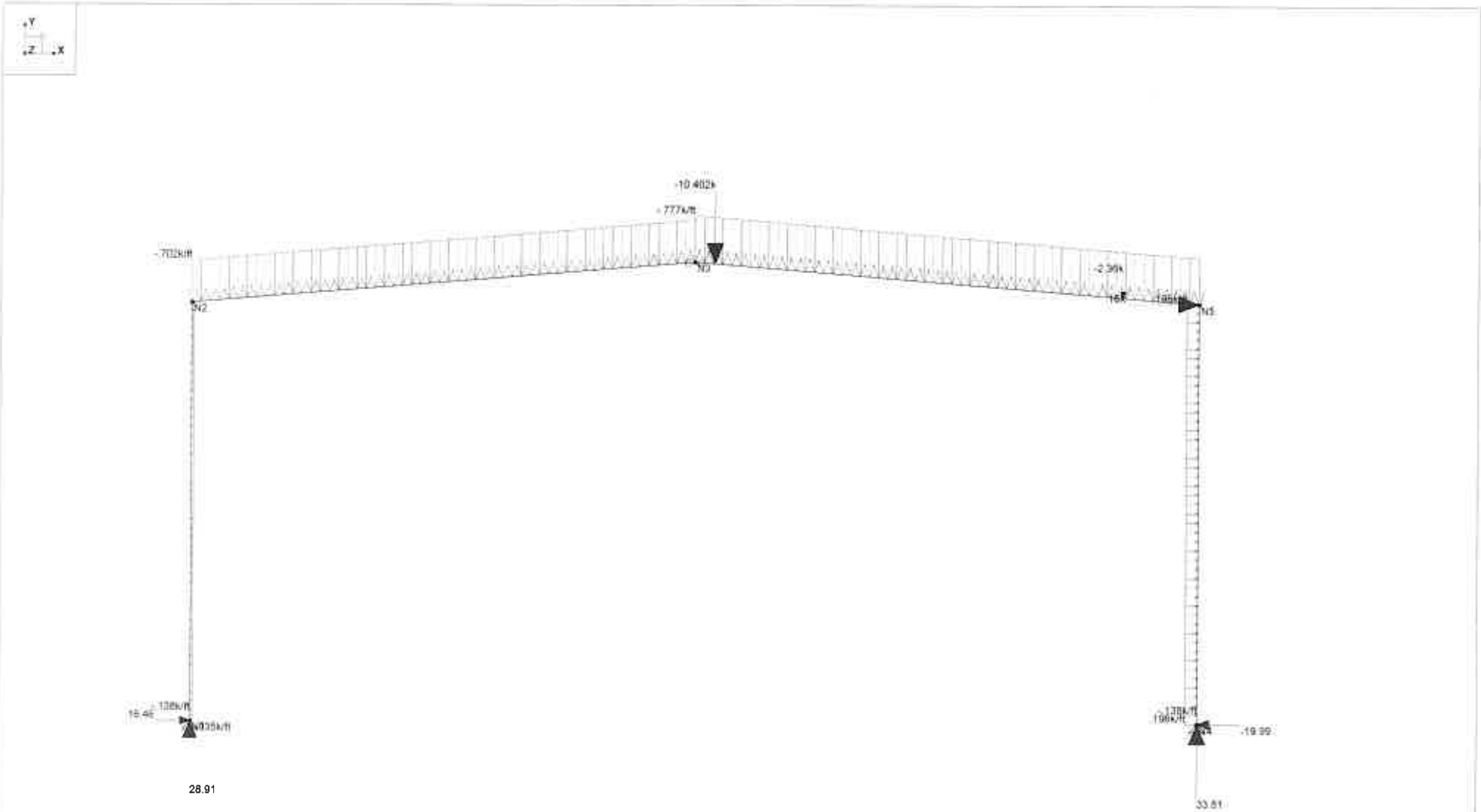

Loads: LC 25, 1.2DL max 1 + 1.6 Lr + 1.0 Lrr max 1 + 0.5 W1 wall and roof
Results for LC 25, 1.2DL max 1 + 1.6 Lr + 1.0 Lrr max 1 + 0.5 W1 wall and roof
Z moment Reaction units are k and k-ft

ARCADIS		SK - 1
Matt Ltoycz	Topok Workshop Building	Jan 7, 2015 at 2:47 PM
		Typical Frame.r2d

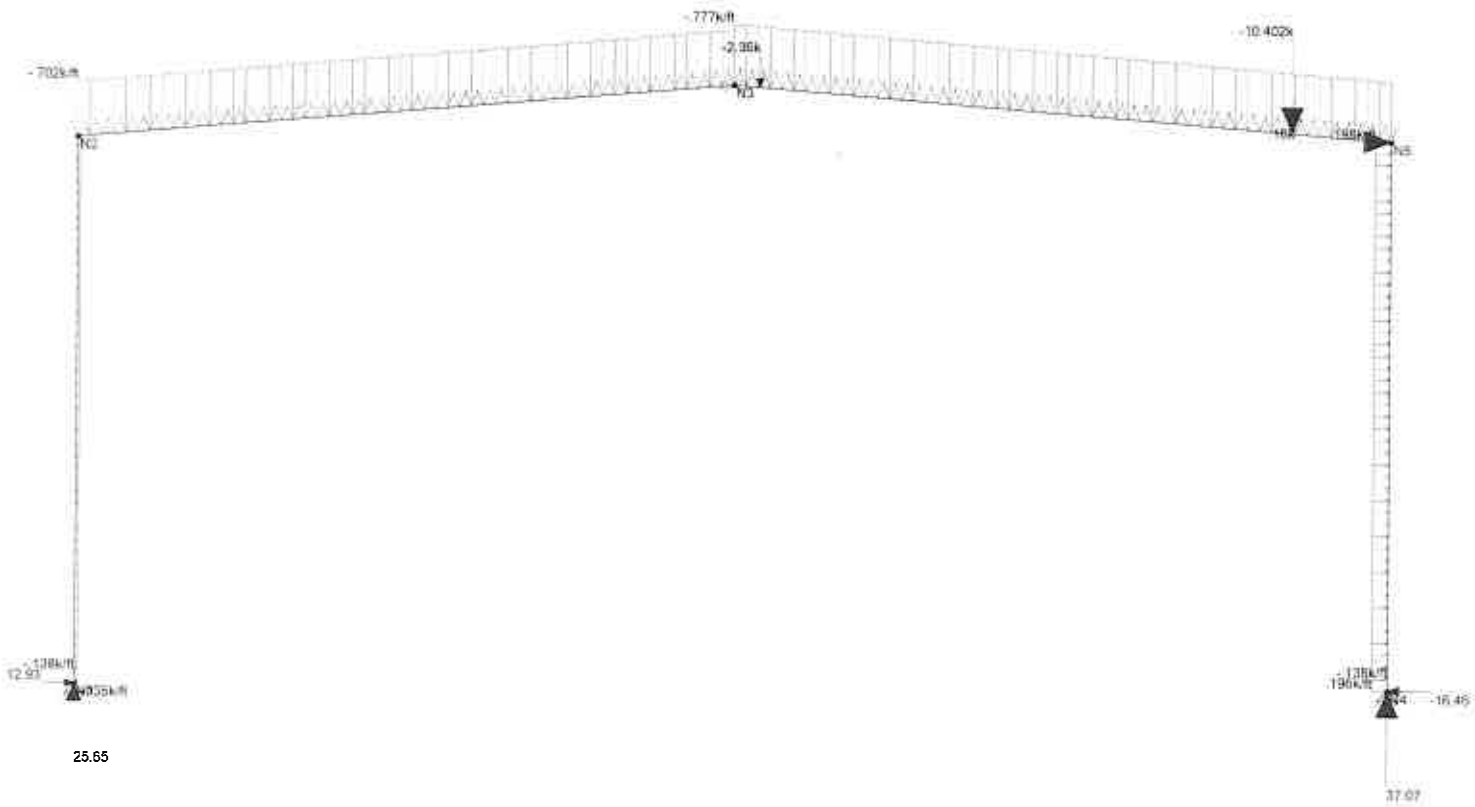

Loads: LC 26, 1.2DL max 2 + 1.6 Lr + 1.0 Lr max 2 + 0.5 W1 wall and roof
Results for LC 26, 1.2DL max 2 + 1.6 Lr + 1.0 Lr max 2 + 0.5 W1 wall and roof
Z-moment Reaction units are k and k-ft

ARCADIS		SK - 2
Matt Ltoycz	Topok Workshop Building	Jan 7, 2015 at 2:47 PM
		Typical Frame.r2d

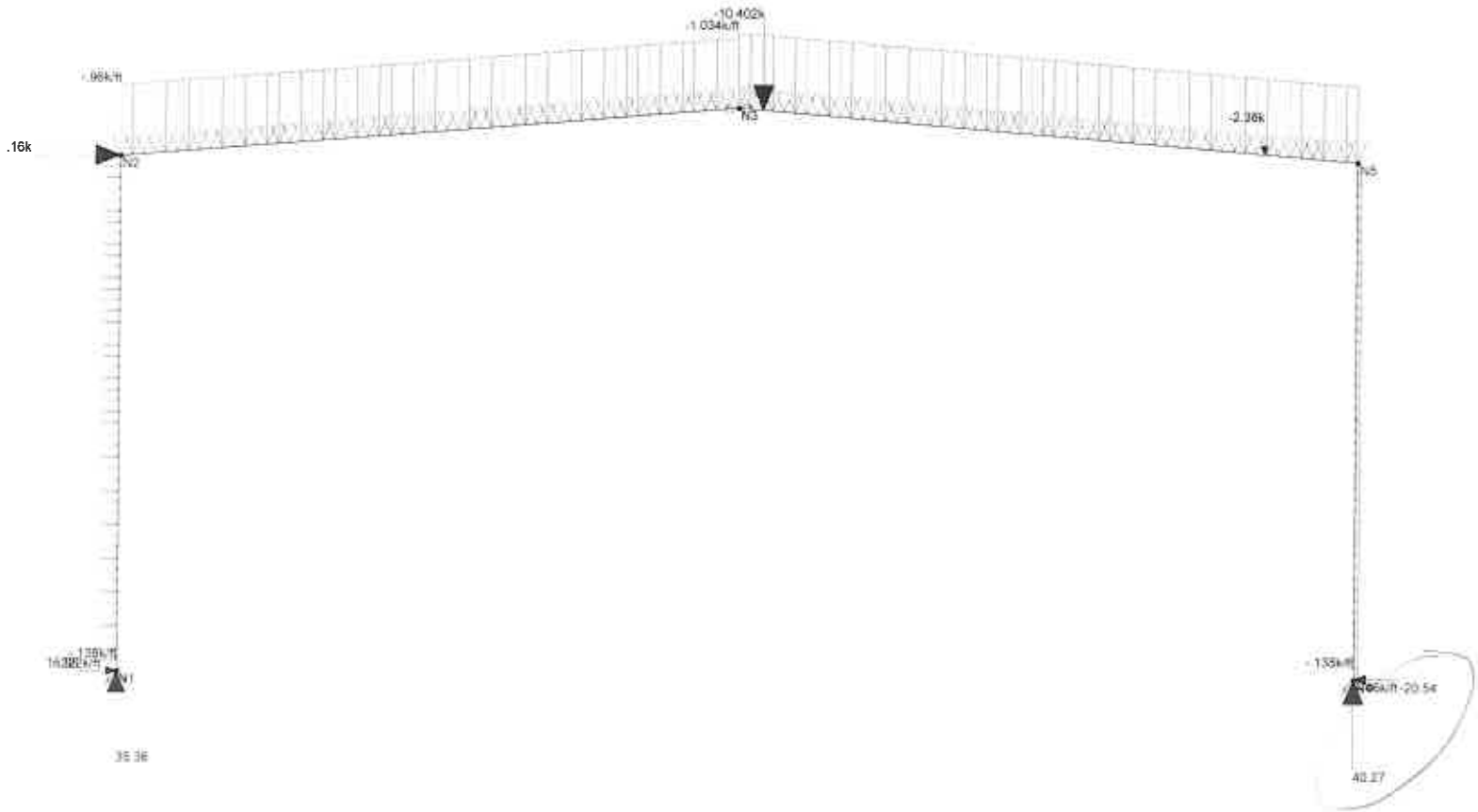

Loads: LC 27, 1.2DL max 1 + 1.6 Lr + 1.0 Lrr max 1 + 0.5 W2 wall and roof
Results for LC 27, 1.2DL max 1 + 1.6 Lr + 1.0 Lrr max 1 + 0.5 W2 wall and roof
Z-moment Reaction units are k and k-ft

ARCADIS		SK - 3
Matt Ltoycz	Topok Workshop Building	Jan 7, 2015 at 2:47 PM
		Typical Frame.r2d

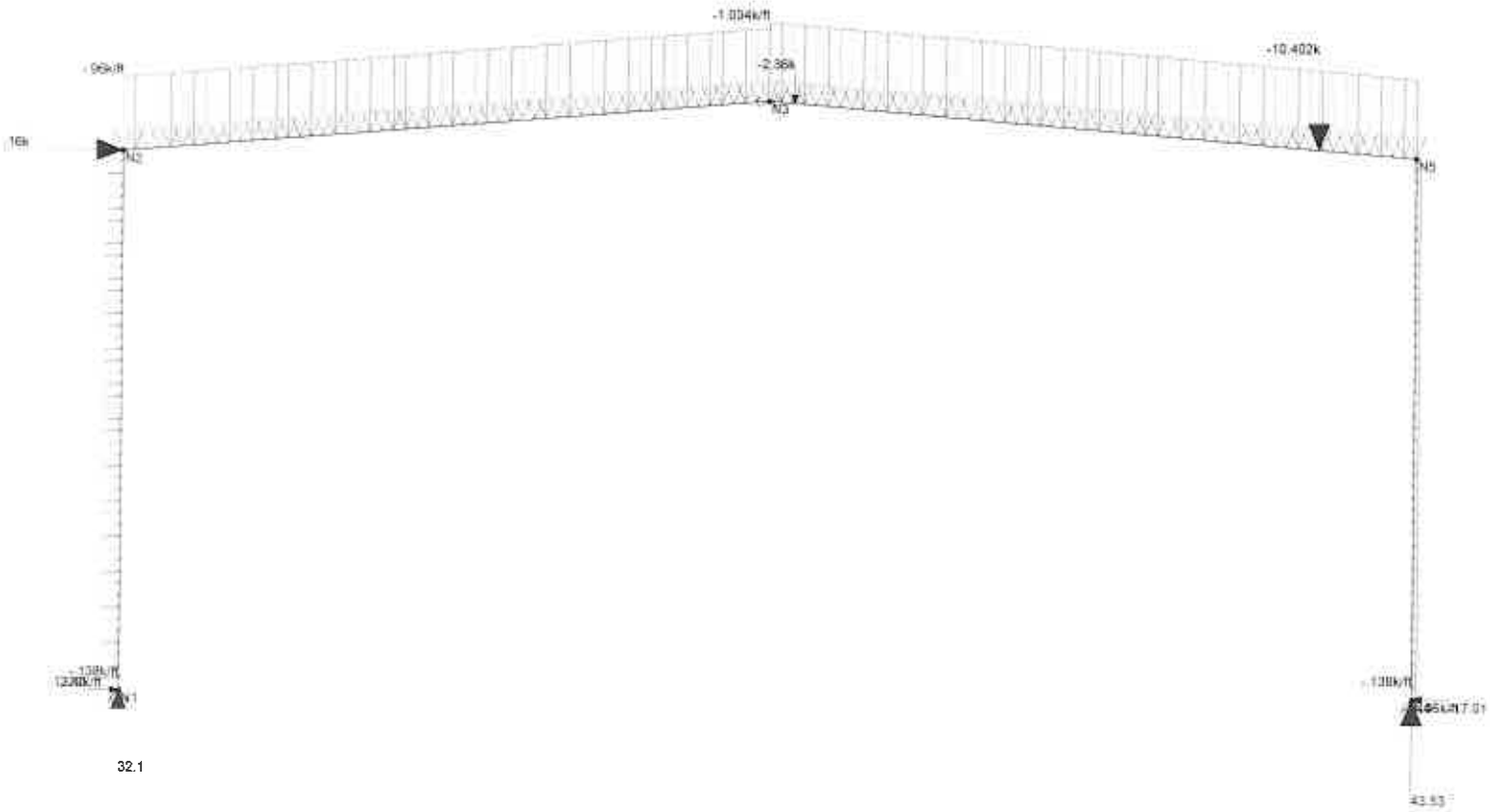

Loads: LC 28, 1.2DL max 2 + 1.6 Lr + 1.0 Lm max 2 + 0.5 W2 wall and roof
Results for LC 28, 1.2DL max 2 + 1.6 Lr + 1.0 Lm max 2 + 0.5 W2 wall and roof
Z-moment Reaction units are k and k-ft

ARCADIS		SK - 4
Matt Ltoycz	Topok Workshop Building	Jan 7, 2015 at 2:48 PM
		Typical Frame.r2d

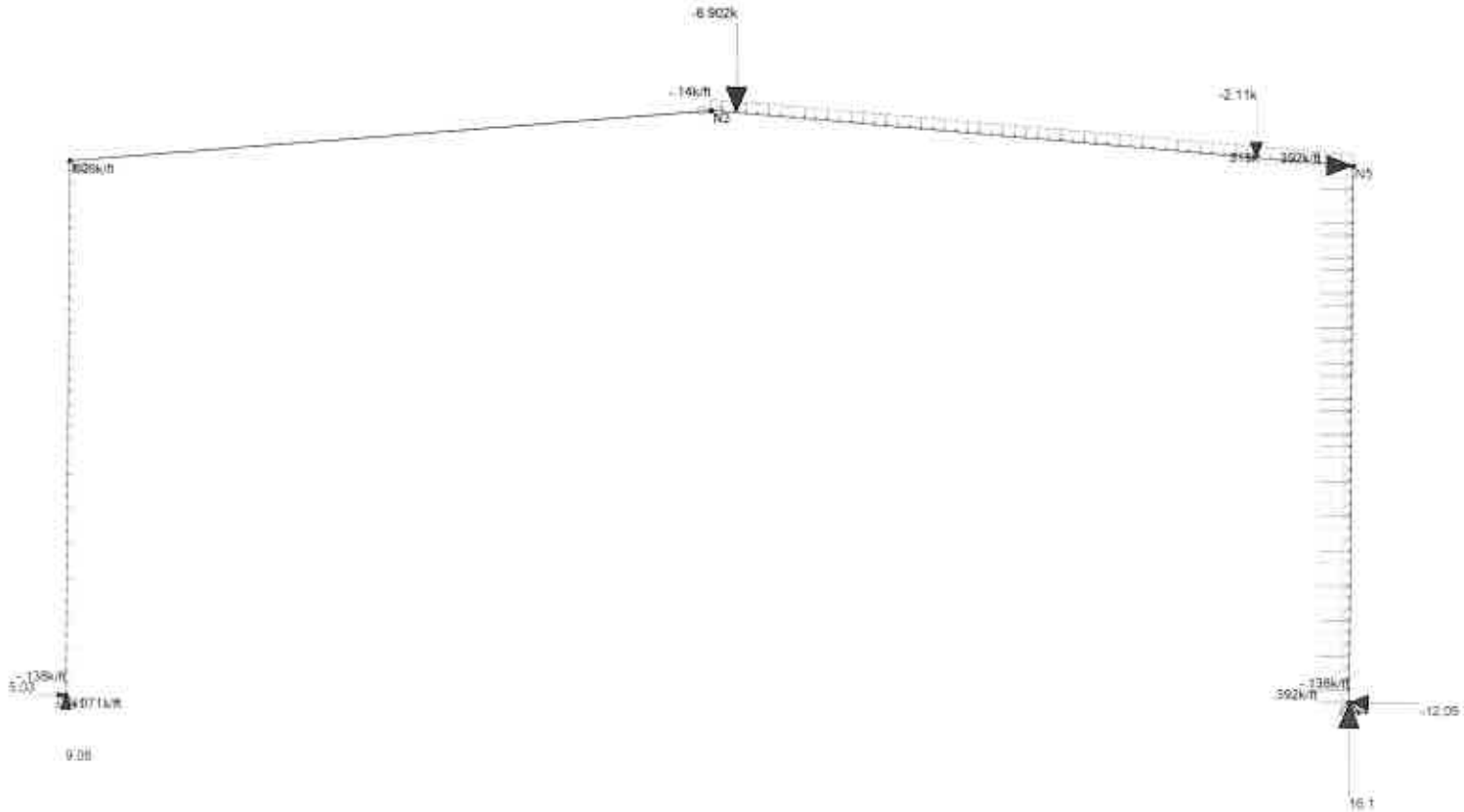

Loads: LC 29, 1.2DL max 1 + 0.5 Lr + 0.5 Lrr max 1 + 1.0 W1 wall and roof
Results for LC 29, 1.2DL max 1 + 0.5 Lr + 0.5 Lrr max 1 + 1.0 W1 wall and roof
Z-moment Reaction units are k and k-ft

ARCADIS		SK - 5
Matt Ltoycz	Topok Workshop Building	Jan 7, 2015 at 2:48 PM
		Typical Frame.r2d

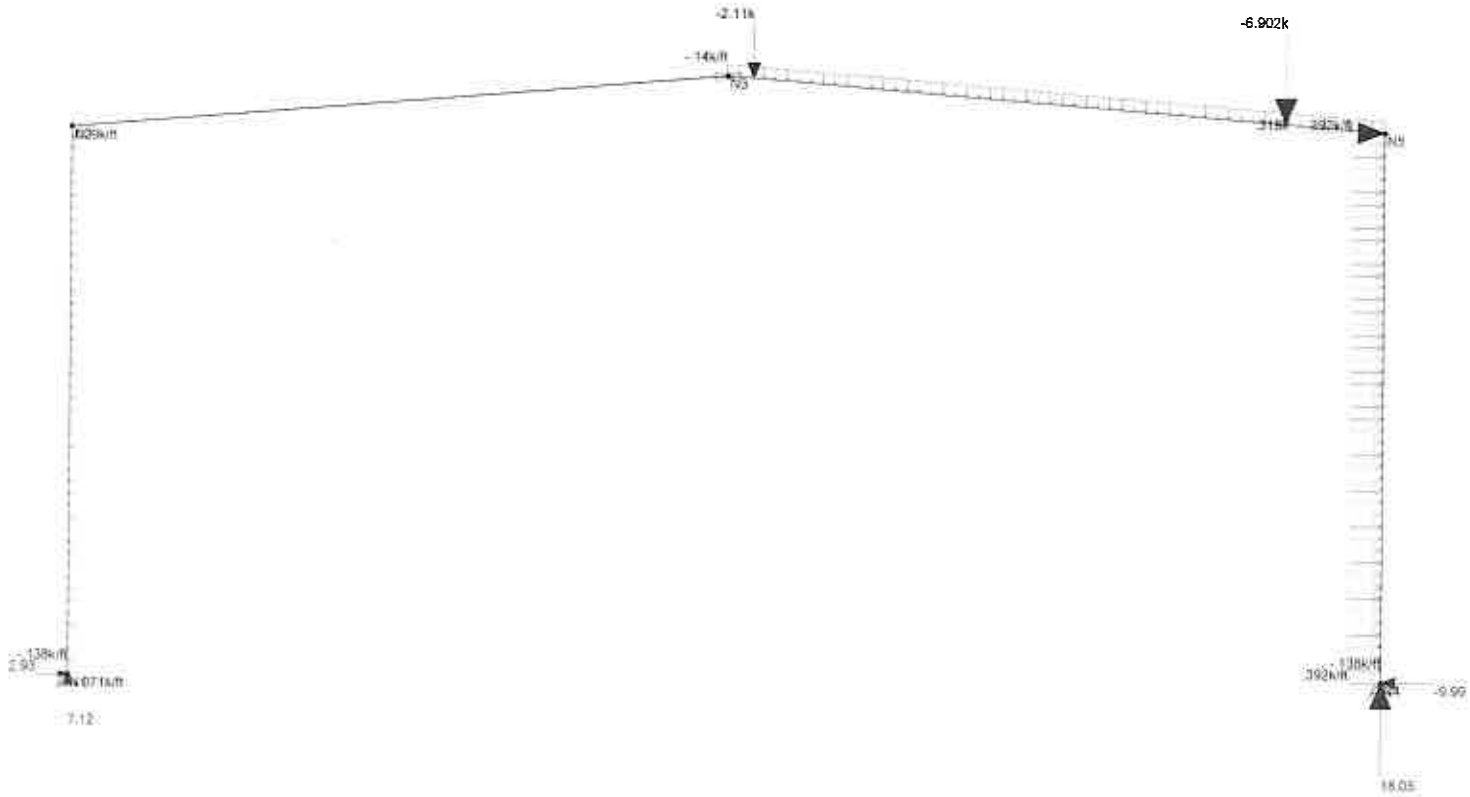

Loads: LC 30, 1.2DL max 2 + 0.5 Lr + 0.5 Lrr max 2 + 1.0 W1 wall and roof
Results for LC 30, 1.2DL max 2 + 0.5 Lr + 0.5 Lrr max 2 + 1.0 W1 wall and roof
Z-moment Reaction units are k and k-ft

ARCADIS		SK - 6
Matt Ltoycz	Topok Workshop Building	Jan 7, 2015 at 2:48 PM
		Typical Frame.r2d

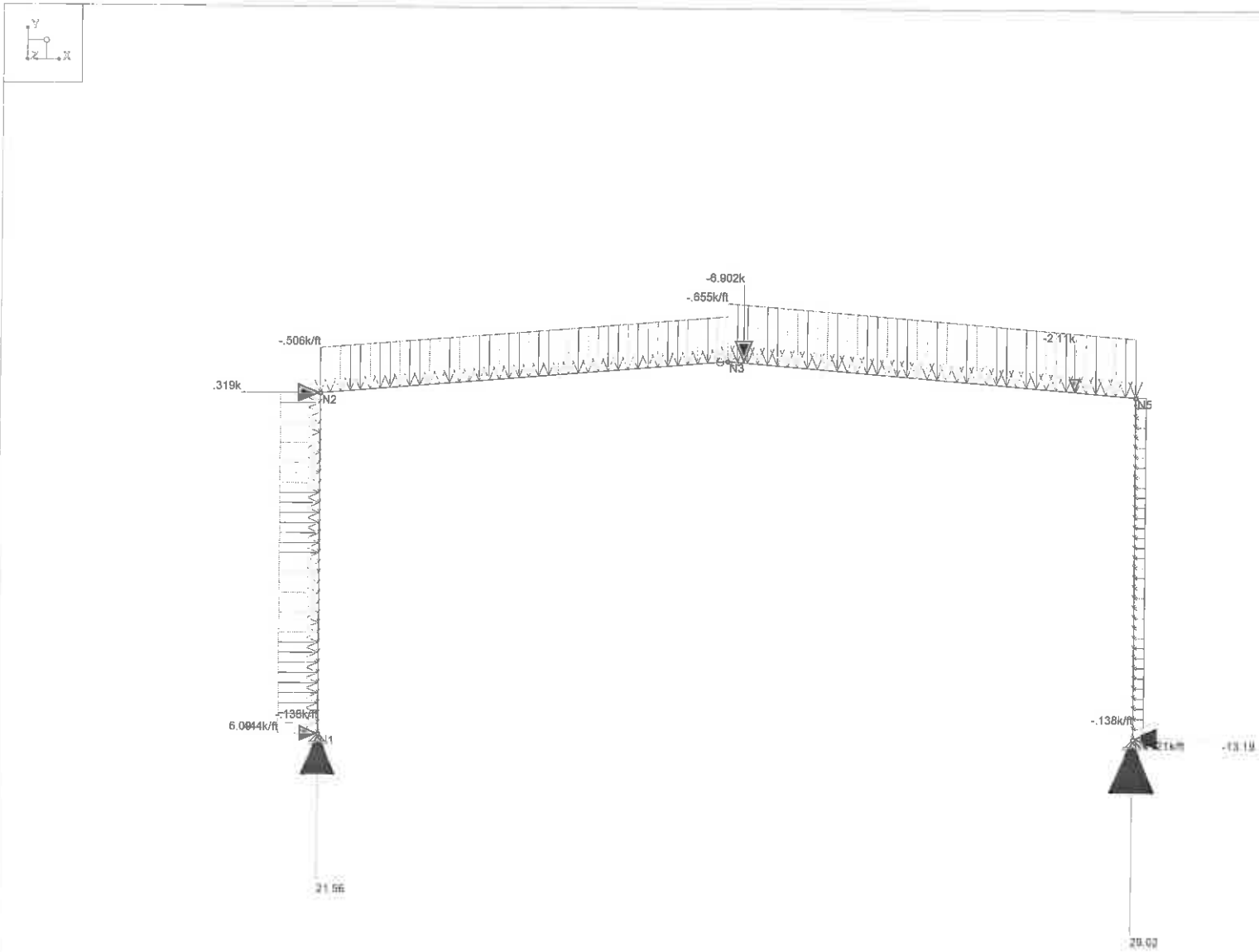

Loads: LC 31, 1.2DL max 1 + 0.5 Lr + 0.5 Lm max 1 + 1.0 W2 wall and roof
Results for LC 31, 1.2DL max 1 + 0.5 Lr + 0.5 Lm max 1 + 1.0 W2 wall and roof
Z-moment Reaction units are k and k-ft

ARCADIS		SK - 7
Matt Ltoycz	Topok Workshop Building	Jan 7, 2015 at 2:49 PM
		Typical Frame.r2d

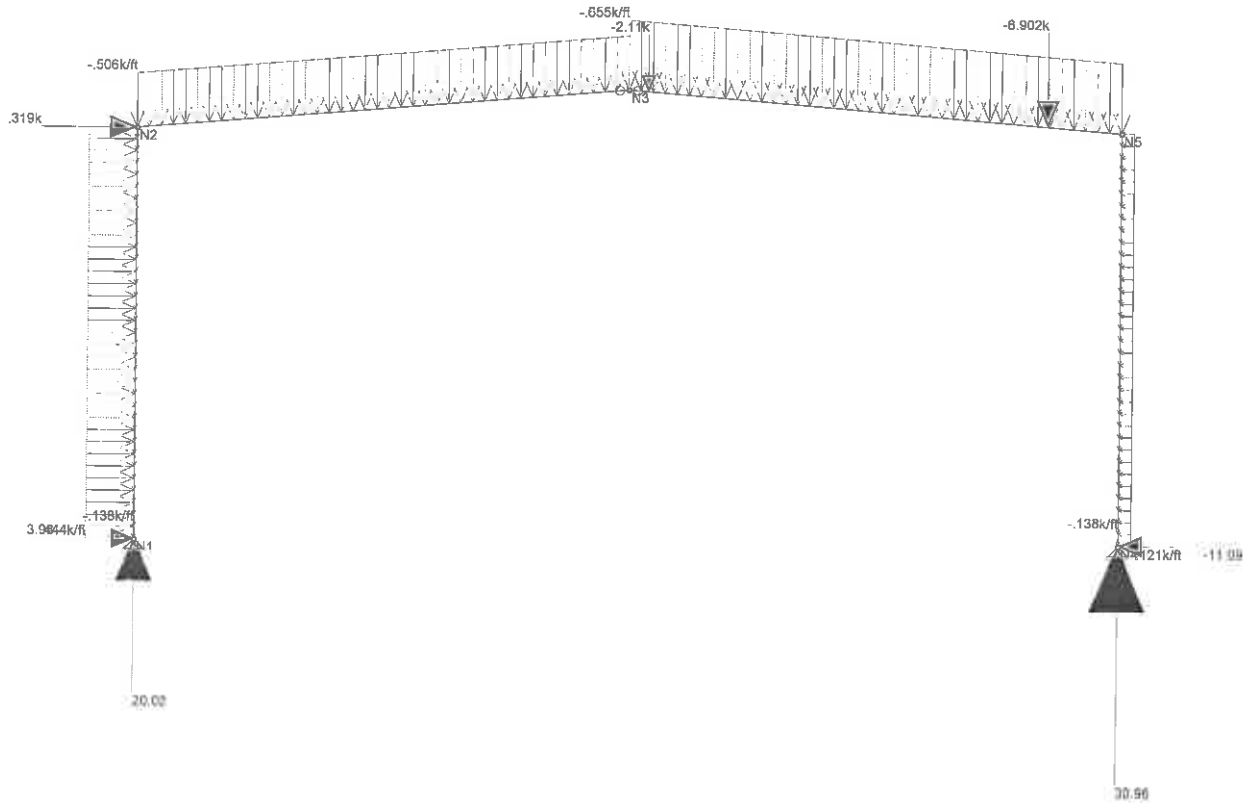

Loads: LC 32, 1.2DL max 2 + 0.5 Lr + 0.5 Lr max 2 + 1.0 W2 wall and roof
Results for LC 32, 1.2DL max 2 + 0.5 Lr + 0.5 Lr max 2 + 1.0 W2 wall and roof
Z-moment Reaction units are k and k-ft

ARCADIS		SK - 8
Matt Ltoycz	Topok Workshop Building	Jan 7, 2015 at 2:50 PM
		Typical Frame.r2d

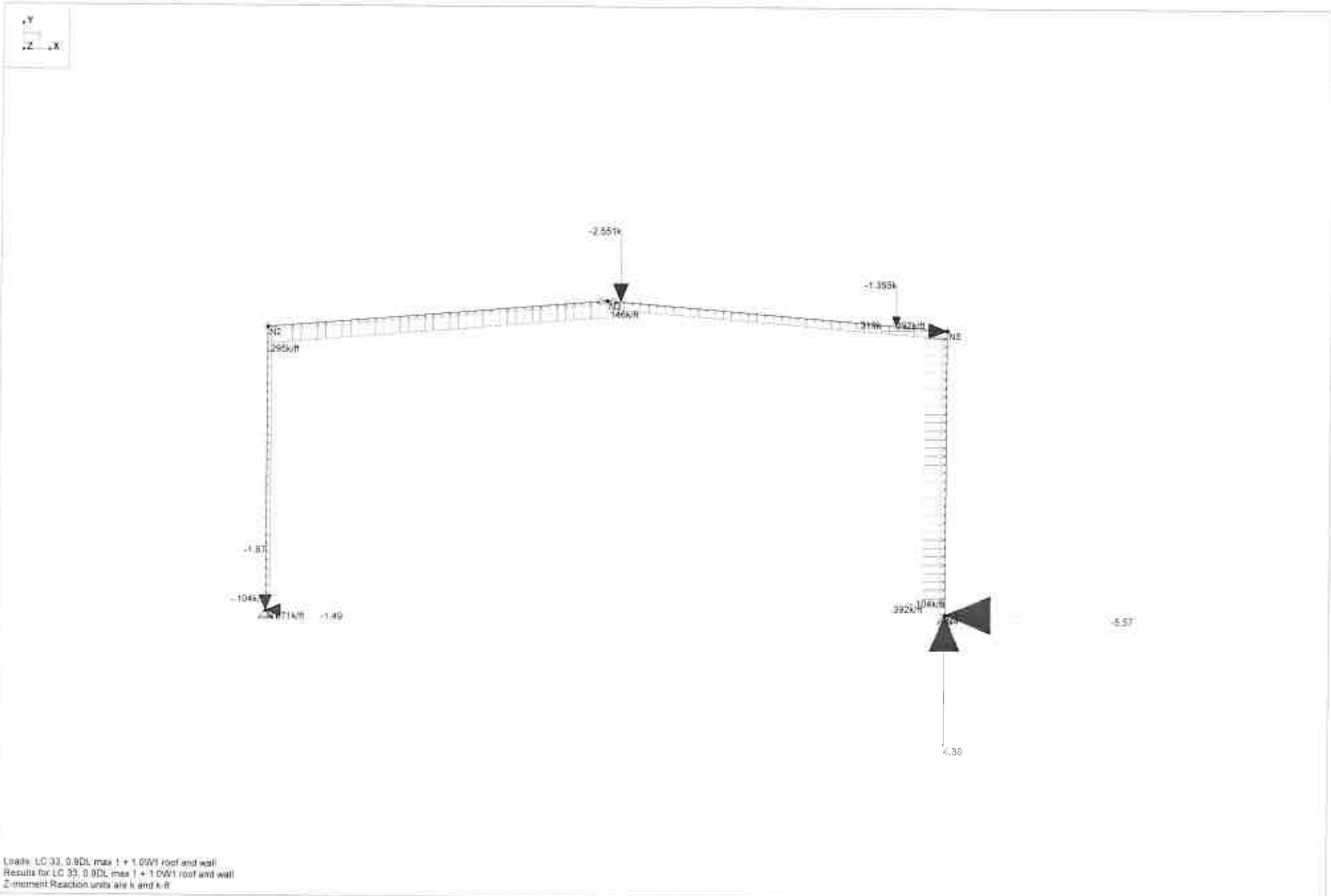

Loads: LC 33, 0.9DL max 1 + 1.0W1 roof and wall
Results for LC 33, 0.9DL max 1 + 1.0W1 roof and wall
Z-moment Reaction units are k and k-ft

ARCADIS	Topok Workshop Building	SK - 9
Matt Ltoycz		Jan 7, 2015 at 2:50 PM
		Typical Frame.r2d

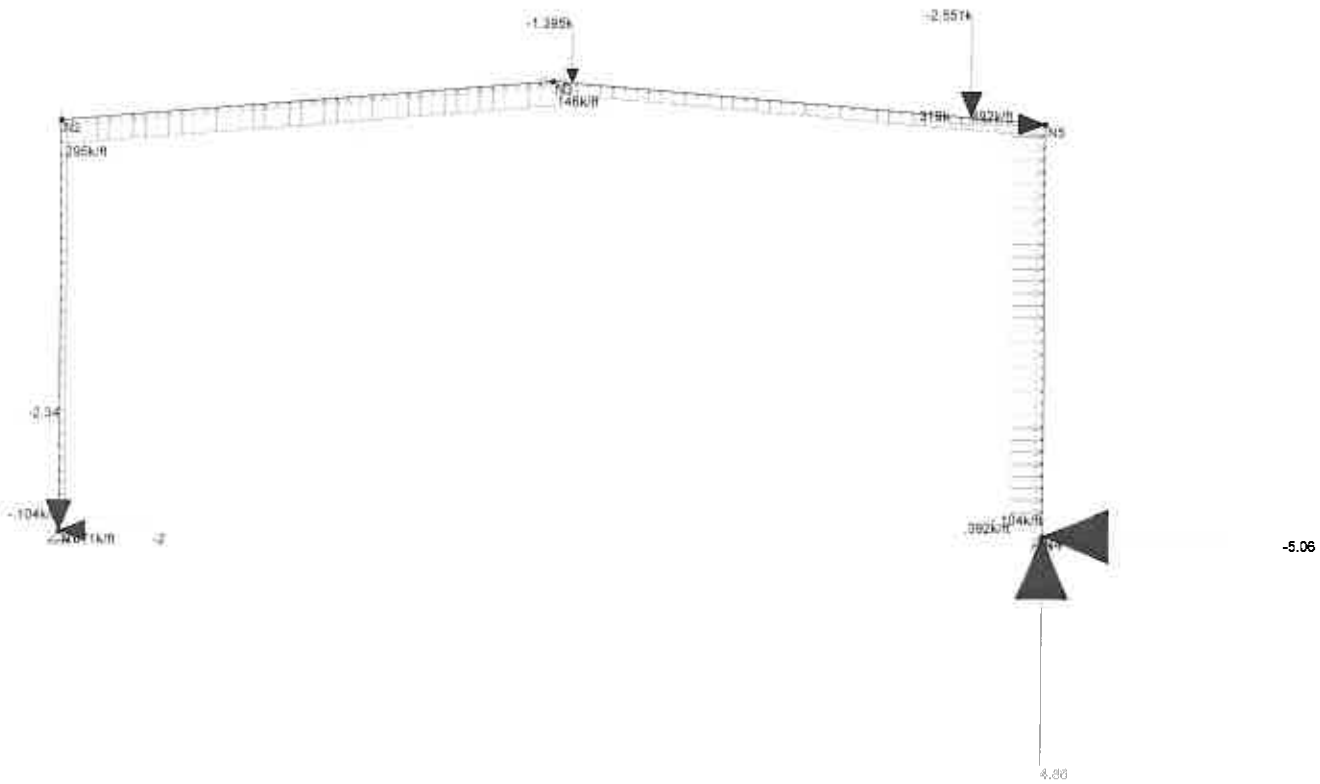

Loads: LC 34, 0.9DL max 2 + 1.0W1 roof and wall
Results for LC 34, 0.9DL max 2 + 1.0W1 roof and wall
Z-moment Reaction units are k and k-ft

ARCADIS		SK - 10
Matt Ltoycz	Topok Workshop Building	Jan 7, 2015 at 2:50 PM
		Typical Frame.r2d

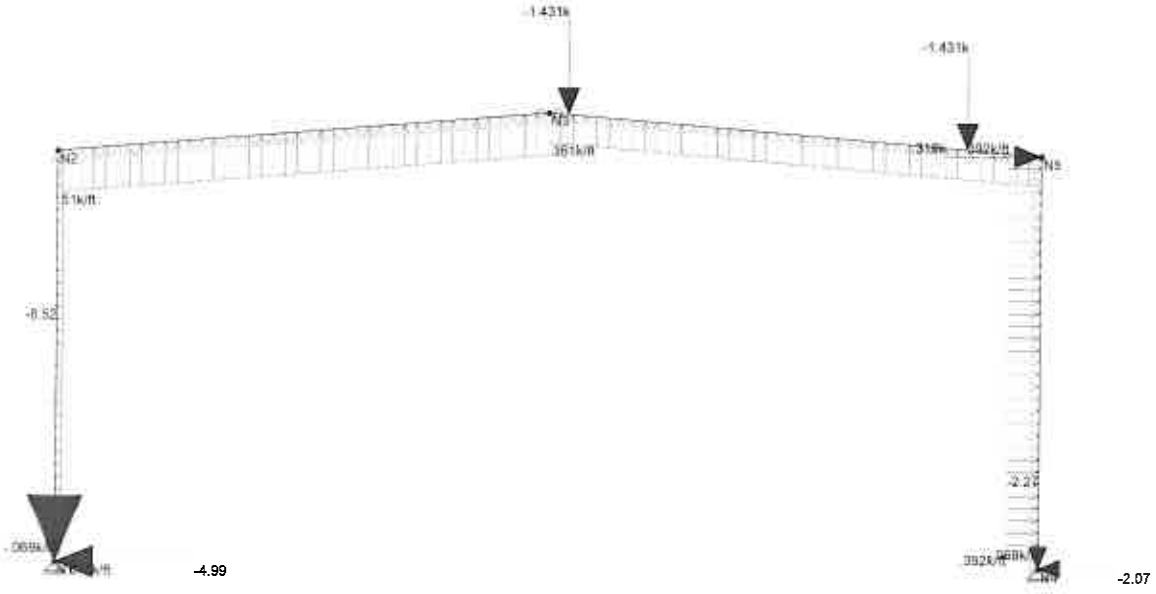

Loads: LC 35, 0.9DL min 1 + 1.0W1 roof and wall
Results for LC 35, 0.9DL min 1 + 1.0W1 roof and wall
Z-moment Reaction units are k and k-ft

ARCADIS		SK - 11
Matt Ltoycz	Topok Workshop Building	Jan 7, 2015 at 2:50 PM
		Typical Frame.r2d

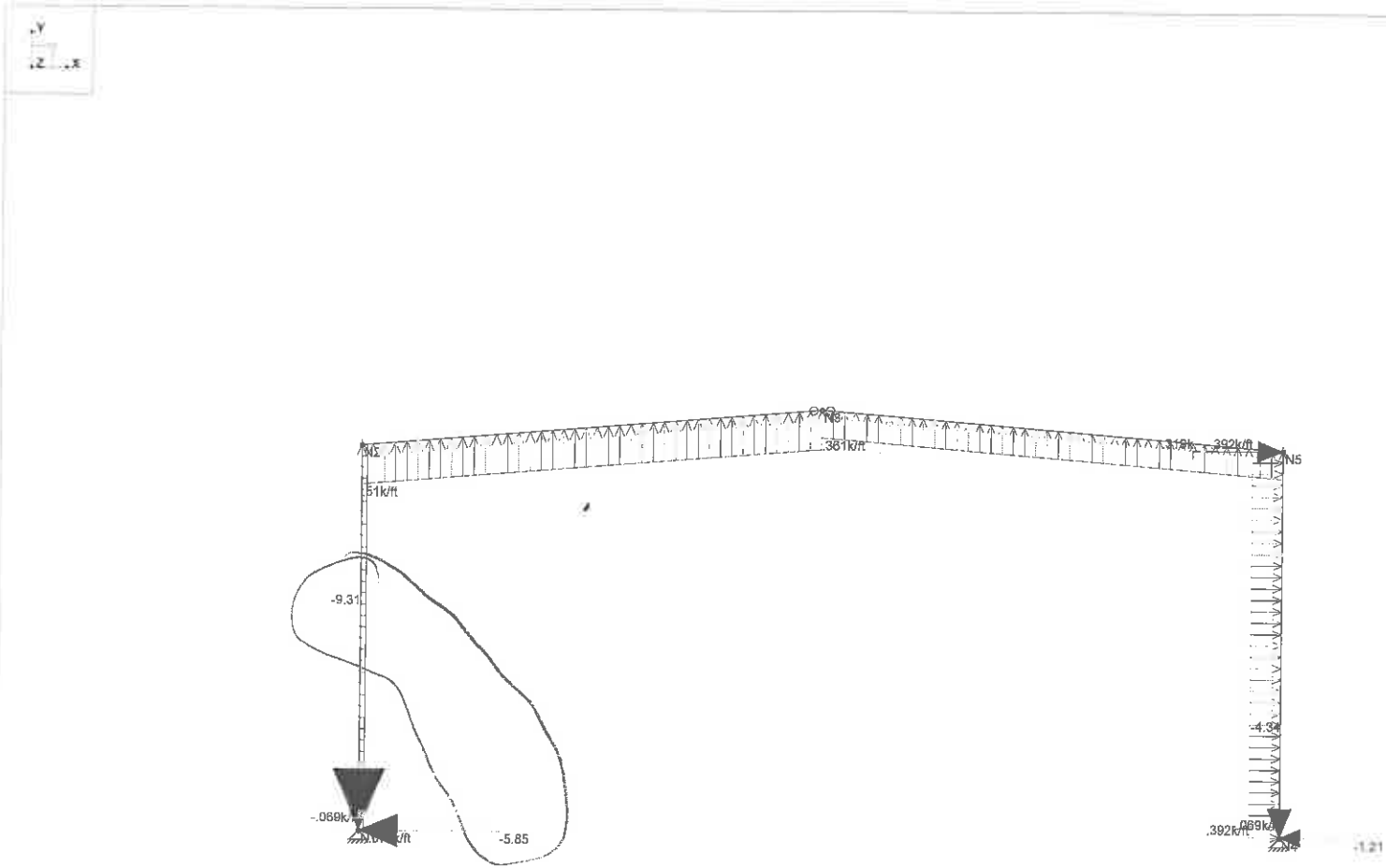

Loads: LC 36, 0.9DL min 2 + 1.0W1 roof and wall
Results for LC 36, 0.9DL min 2 + 1.0W1 roof and wall
Z-moment Reaction units are k and k-ft

ARCADIS	Topok Workshop Building	SK - 12
Matt Ltoycz		Jan 7, 2015 at 2:51 PM
		Typical Frame.r2d

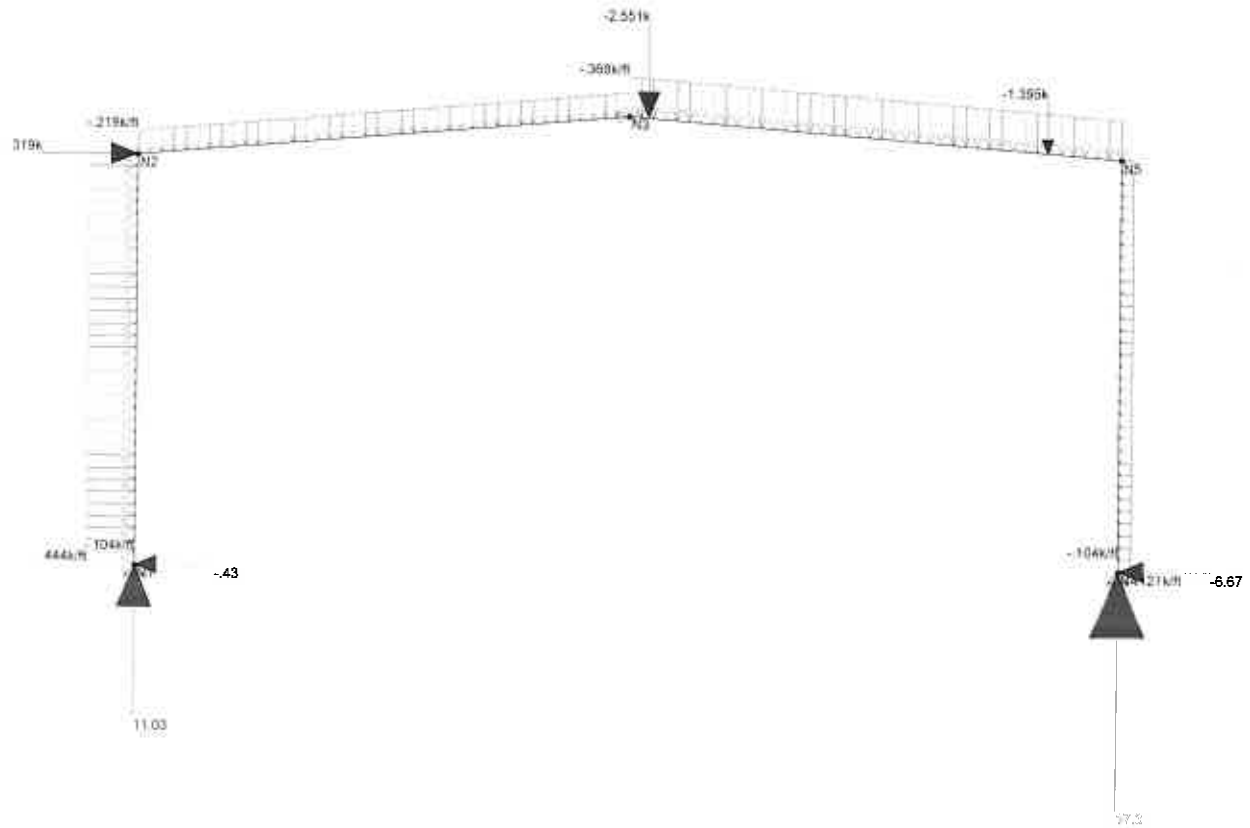

Loads: LC 37, 0.9DL max 1 + 1.0W2 roof and wall
Results for LC 37, 0.9DL max 1 + 1.0W2 roof and wall
Z-moment Reaction units are k and k-ft

ARCADIS	Topok Workshop Building	SK - 13
Matt Ltoycz		Jan 7, 2015 at 2:51 PM
		Typical Frame.r2d

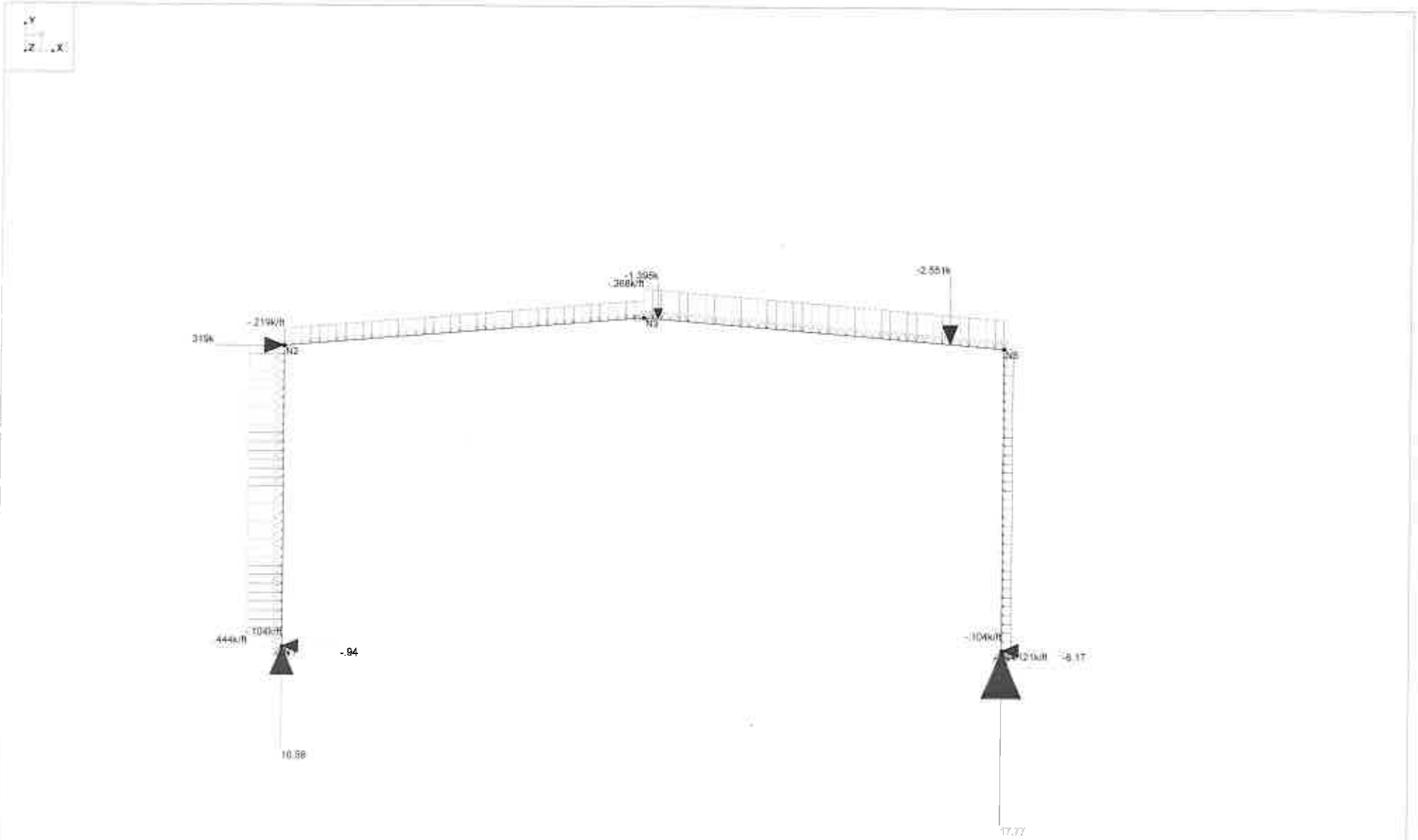

Loads: LC 38, 0.9DL max 2 + 1.0W2 roof and wall
Results for LC 38, 0.9DL max 2 + 1.0W2 roof and wall
Z-moment Reaction units are k and k-ft

ARCADIS	Topok Workshop Building	SK - 14
Matt Ltoycz		Jan 7, 2015 at 2:51 PM
		Typical Frame.r2d

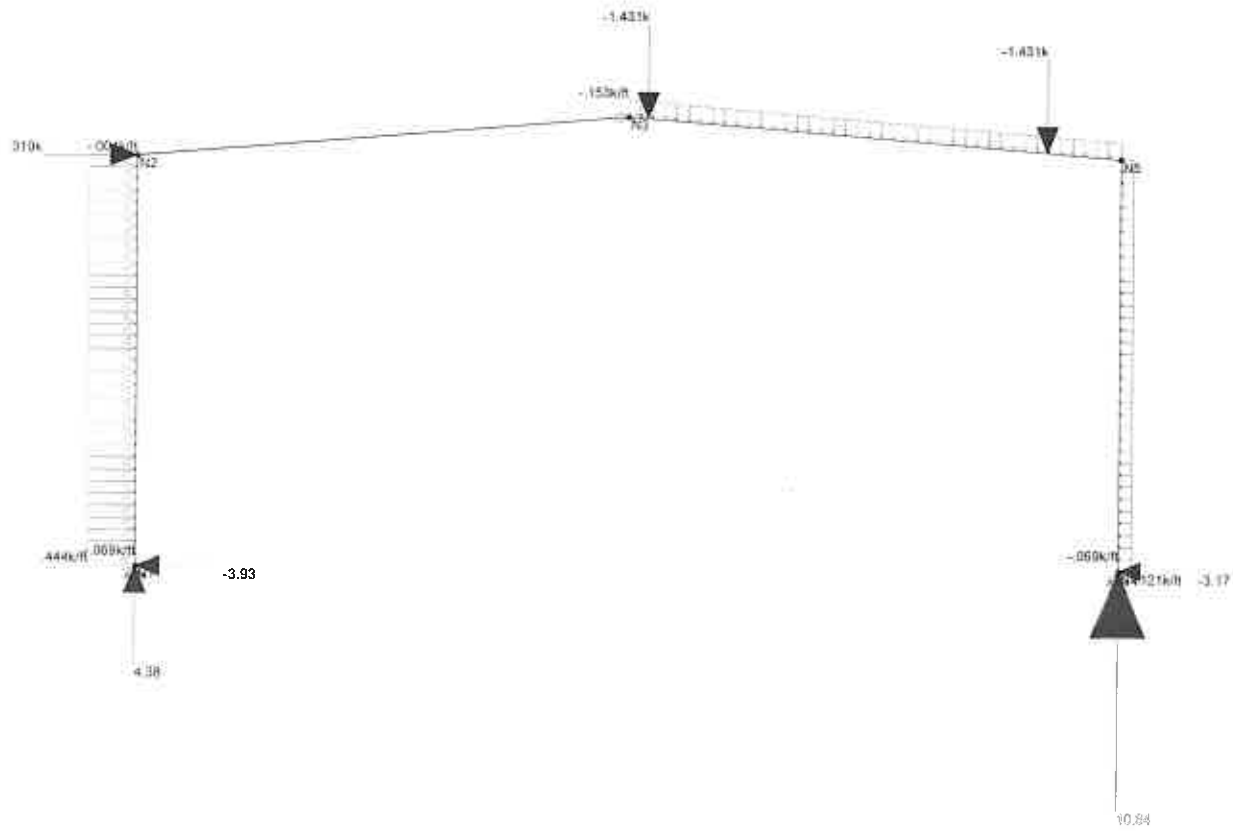

Loads: LC 39, 0.9DL min 1 + 1.0W2 roof and wall
Results for LC 39, 0.9DL min 1 + 1.0W2 roof and wall
Z-moment Reaction units are k and k-ft

ARCADIS		SK - 15
Matt Ltoycz	Topok Workshop Building	Jan 7, 2015 at 2:51 PM
		Typical Frame.r2d

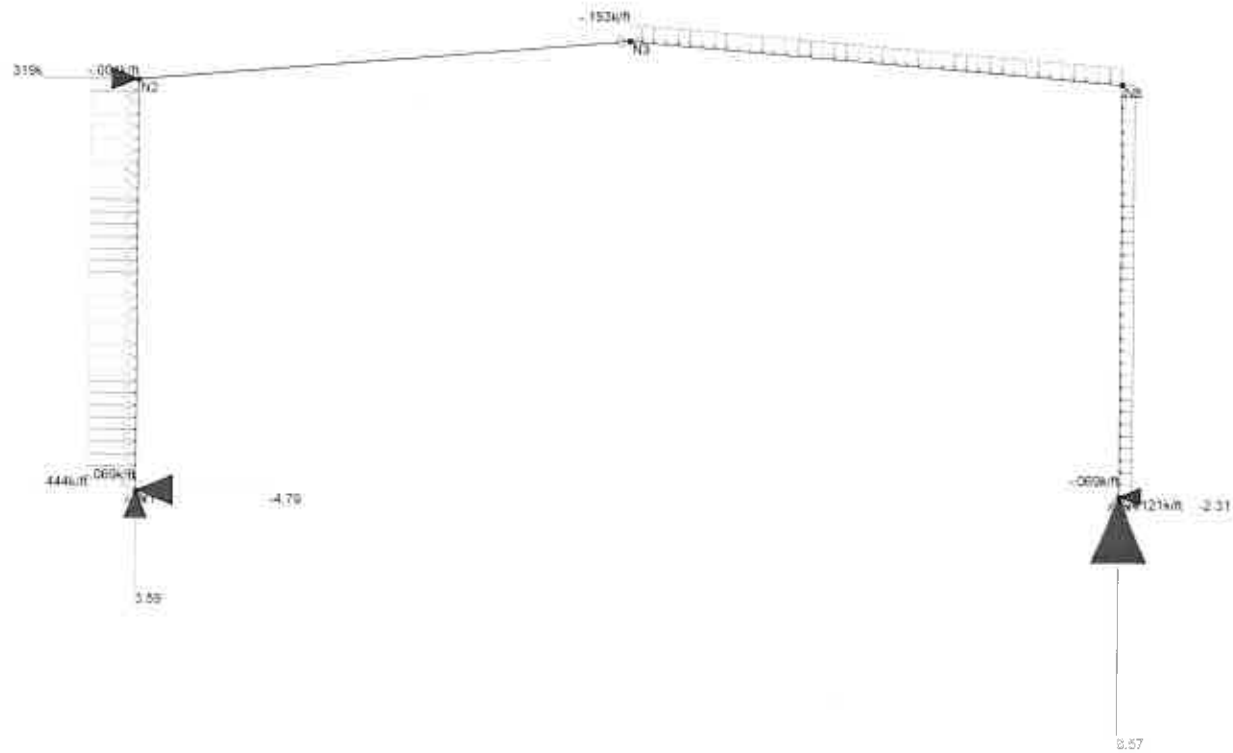

Loads: LC 40, 0.9DL min 2 + 1.0W2 roof and wall
Results for LC 40, 0.9DL min 2 + 1.0W2 roof and wall
Z-moment Reaction units are k and k-ft

ARCADIS		SK - 16
Matt Ltoycz	Topok Workshop Building	Jan 7, 2015 at 2:52 PM
		Typical Frame.r2d

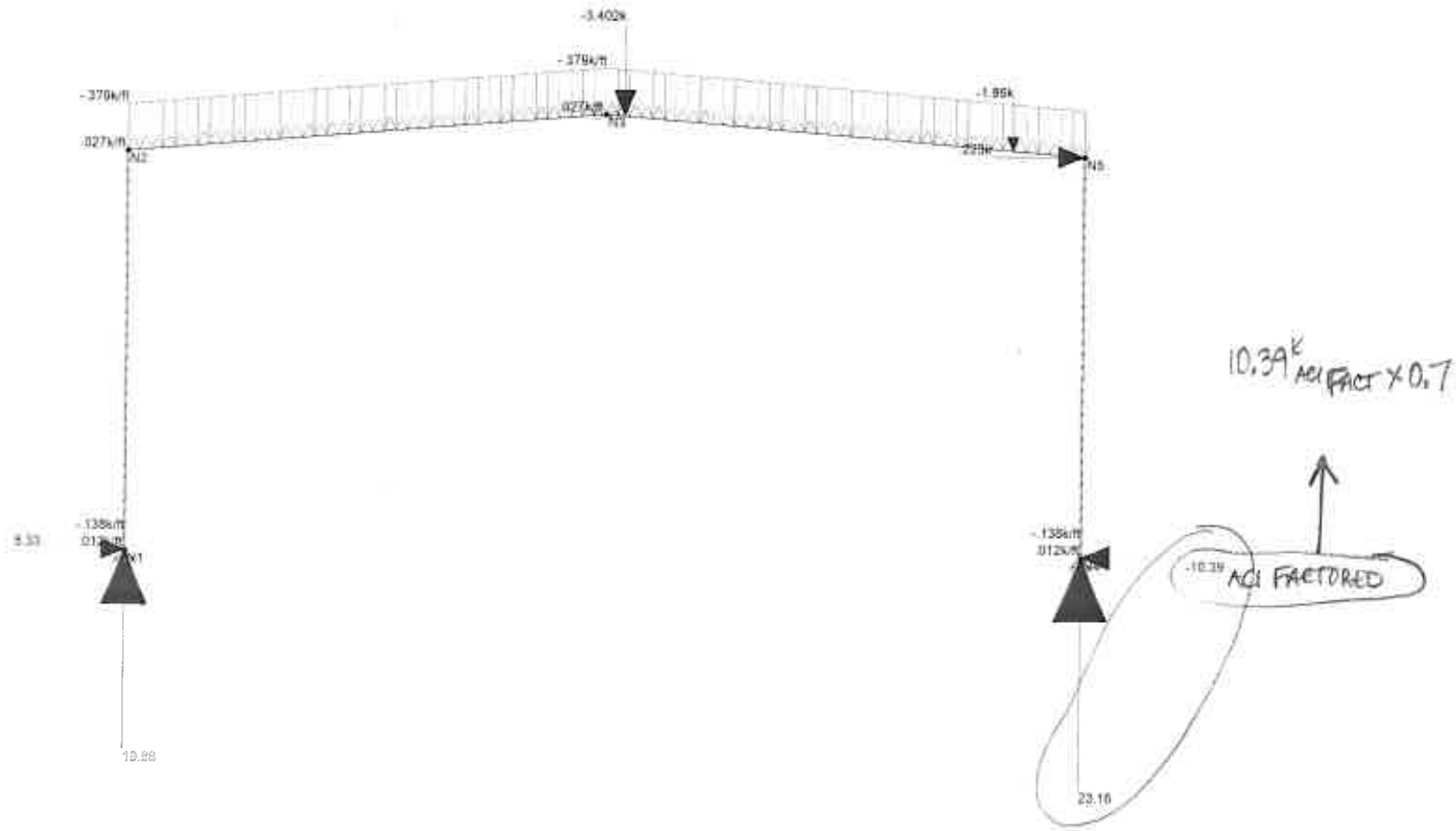

Loads: LC 41, 1.2DL max 1 + 1.0E
Results for LC 41, 1.2DL max 1 + 1.0E
Z-moment Reaction units are k and k/ft

ARCADIS		SK - 17
Matt Ltoycz	Topok Workshop Building	Jan 7, 2015 at 3:13 PM
		Typical Frame.r2d

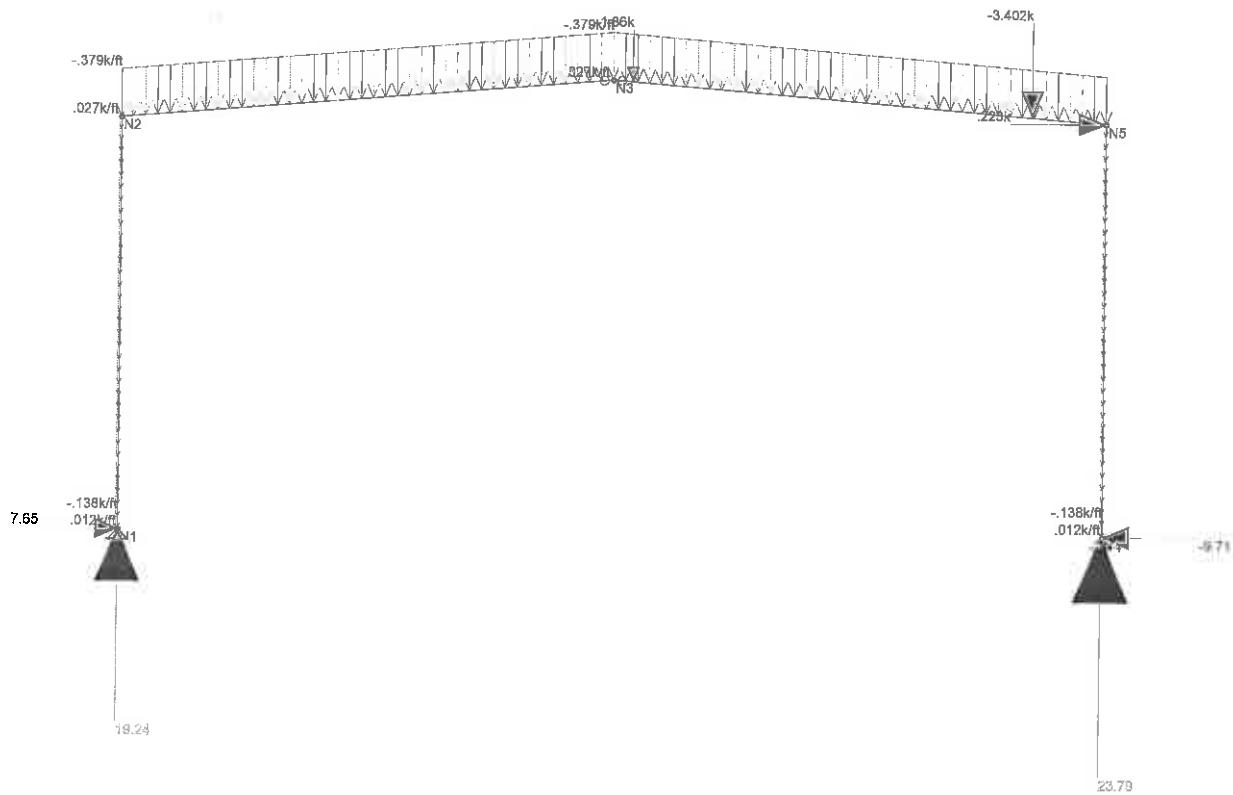

Loads: LC 42, 1.2DL max 2 + 1.0E
Results for LC 42, 1.2DL max 2 + 1.0E
Z-moment Reaction units are k and k-ft

ARCADIS	Topok Workshop Building	SK - 18
Matt Ltoycz		Jan 7, 2015 at 3:13 PM
		Typical Frame.r2d

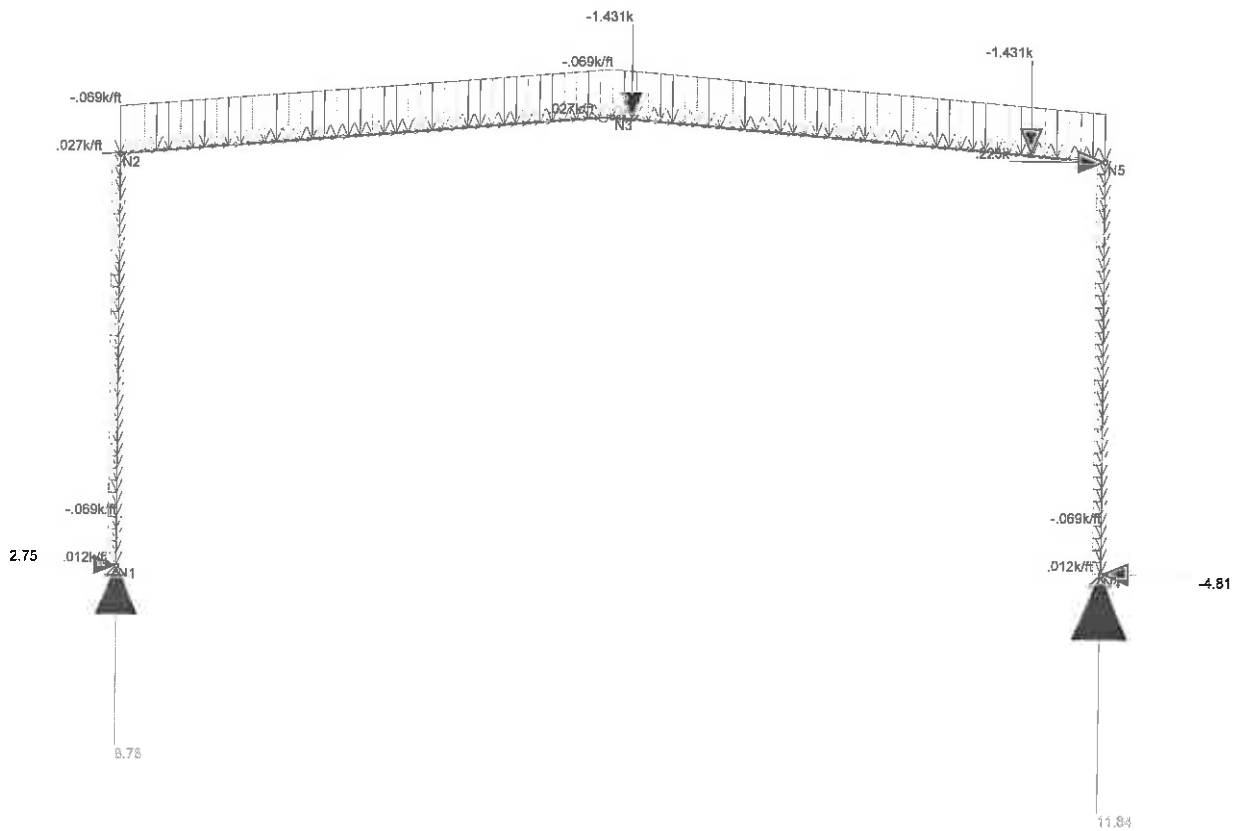

Loads: LC 43, 0.9DL min 1 + 1.0E
Results for LC 43, 0.9DL min 1 + 1.0E
Z-moment Reaction units are k and k-ft

ARCADIS		SK - 19
Matt Ltoycz	Topok Workshop Building	Jan 7, 2015 at 3:14 PM
		Typical Frame.r2d

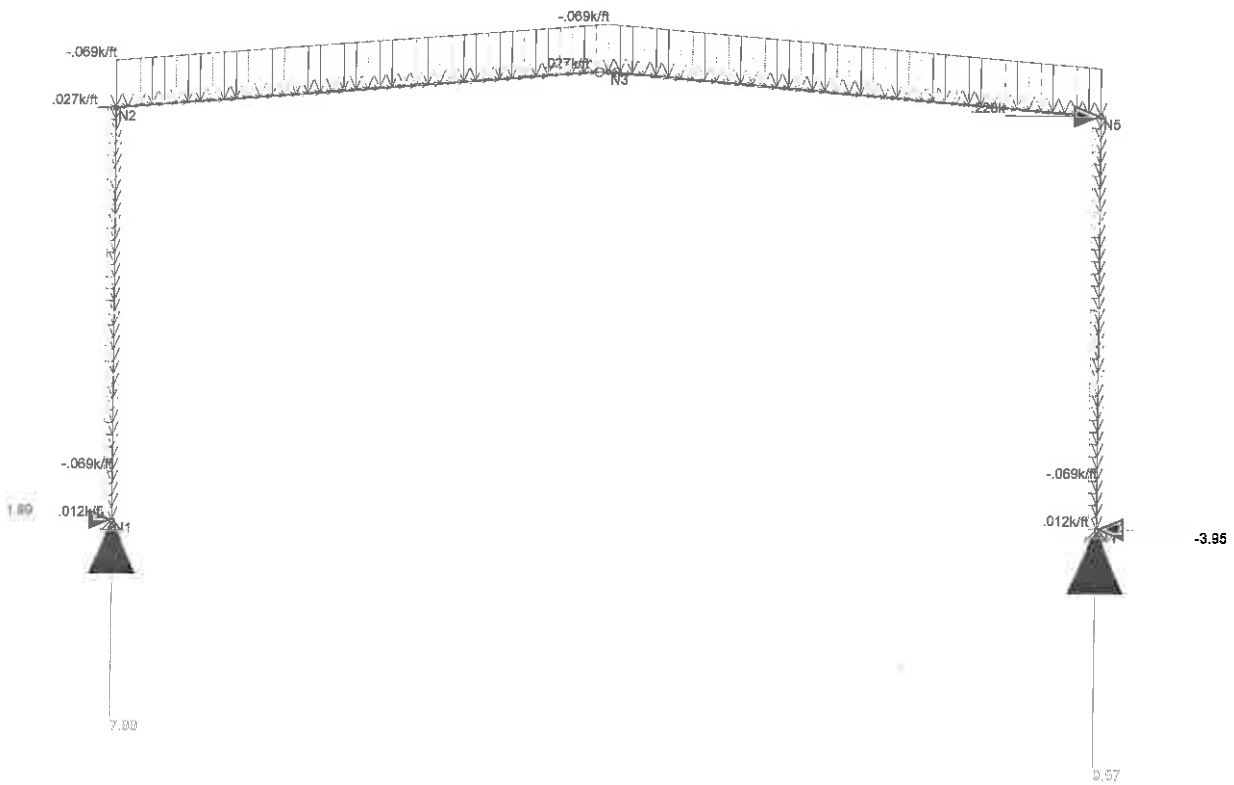

Loads: LC 44, 0.9DL min 2 + 1.0E
Results for LC 44, 0.9DL min 2 + 1.0E
Z-Moment Reaction units are k and k-ft

ARCADIS	Topok Workshop Building	SK - 20
Matt Ltoycz		Jan 7, 2015 at 3:14 PM
		Typical Frame r2d

TABLE OF CONTENTS

Table of Contents 1
Frame Column Base Reactions 1
Gable, Clear Span @ 30'-0" 2
Gable, Clear Span @ 40'-0" 2
Gable, Clear Span @ 50'-0" 3
Gable, Clear Span @ 60'-0" 4
Gable, Clear Span @ 70'-0" 5
Gable, Clear Span @ 80'-0" 6
Gable, Clear Span @ 100'-0" 7
Gable, Clear Span @ 120'-0" 8
Gable, Two Spans @ 40'-0" 9
Gable, Two Spans @ 40'-0" 10
Gable, Two Spans @ 50'-0" 11
Gable, Two Spans @ 50'-0" 12
Gable, Two Spans @ 60'-0" 13
Gable, Two Spans @ 60'-0" 14
Gable, Three Spans @ 40'-0" 15
Gable, Three Spans @ 40'-0" 16
Gable, Three Spans @ 50'-0" 17
Gable, Three Spans @ 50'-0" 18
Gable, Three Spans @ 60'-0" 19
Gable, Three Spans @ 60'-0" 20
Gable, Four Spans @ 40'-0" 21
Gable, Four Spans @ 40'-0" 22
Gable, Four Spans @ 50'-0" 23
Gable, Four Spans @ 50'-0" 24
Gable, Four Spans @ 60'-0" 25
Gable, Four Spans @ 60'-0" 26
..... 27

** ASSUME 30 FT BAY SPACING USED IN TABLE BELOW

GABLE, CLEAR SPAN @ 50'-0"

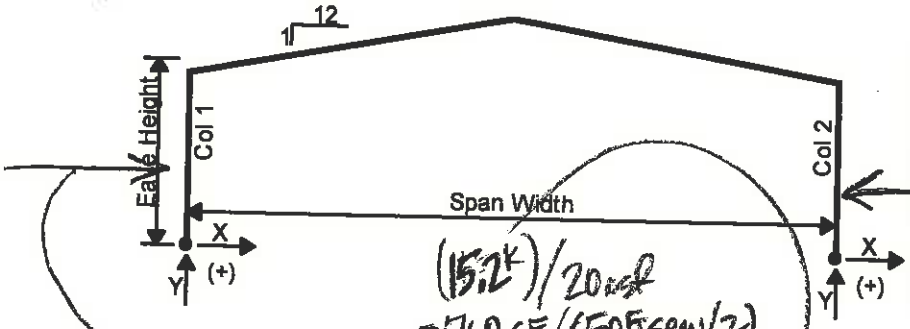

(15.2K)/20psf
=760 SF/(50FT SPAN/2)
=30.4FT C/C BAYS

Reactions are presented below by case to be used in any required combination. Abbreviations are defined as follows:

RDL => Roof Dead Load
RLL => Roof Live Load
W1L => Wind Load to Left
W1R => Wind Load to Right

* [# of Spans] @ [Span Width] x [Eave Height]
** [Width] x [Length] † [# of Bolts] @ [Bolt Dia.]

Frame Description*	Column	Column Base Reactions (kips) RDL X	RDL Y	RLL X	RLL Y	W1L X	W1L Y	W1R X	W1R Y	Base-plate Size**	Anchor Bolts†	
1@50' x 12'	COL 1	6.6	11.3	8.8	15.2	-0.7	-5.7	-8.6	-9.0	8"x10"	2 @ 3/4"	
RLL = 20 psf	COL 2	-6.6	11.3	-8.8	15.2	8.6	-9.0	0.7	-5.7	8"x10"	2 @ 3/4"	
1@50' x 12'	COL 1	6.8	11.5	13.1	21.8	-0.7	-5.5	-8.7	-8.9	8"x10"	2 @ 1"	
RLL = 30 psf	COL 2	-6.8	11.4	13.1	21.7	8.7	-8.9	0.7	-5.5	8"x10"	2 @ 1"	
1@50' x 12'	COL 1	7.2	11.6	17.8	28.3	-2.2	-9.7	14.5	-15.0	8"x10"	2 @ 1-1/4"	
RLL = 40 psf	COL 2	-7.2	11.6	17.8	28.3	14.5	-15.0	2.2	-9.7	8"x10"	2 @ 1-1/4"	
1@50' x 18'	COL 1	3.9	11.4	5.3	15.3	2.8	-4.3	-8.9	-10.1	8"x10"	2 @ 1"	****
RLL = 20 psf	COL 2	-3.9	11.4	-5.3	15.3	9.0	-10.1	-2.8	-4.3	8"x10"	2 @ 1"	****
1@50' x 18'	COL 1	3.9	11.6	7.5	21.9	3.0	-4.1	-9.0	-10.0	8"x10"	2 @ 1"	****
RLL = 30 psf	COL 2	-3.9	11.6	-7.5	21.9	9.0	-10.0	-3.0	-4.1	8"x10"	2 @ 1"	****
1@50' x 18'	COL 1	4.1	11.7	10.2	28.5	3.9	-7.7	14.4	-16.8	8"x10"	2 @ 1"	****
RLL = 40 psf	COL 2	-4.1	11.8	-10.2	28.5	14.6	-16.7	-4.1	-7.6	8"x10"	2 @ 1"	****
1@50' x 24'	COL 1	3.5	11.6	4.7	15.5	5.0	-2.7	11.2	-12.4	8"x10"	2 @ 1"	
RLL = 20 psf	COL 2	-3.5	11.6	-4.7	15.5	11.4	-12.3	-5.2	-2.6	8"x10"	2 @ 1"	
1@50' x 24'	COL 1	3.2	11.6	6.0	21.9	5.4	-2.6	11.0	-12.3	8"x10"	2 @ 1"	
RLL = 30 psf	COL 2	-3.2	11.6	-6.0	21.9	11.0	-12.3	-5.4	-2.6	8"x10"	2 @ 1"	
1@50' x 24'	COL 1	4.0	11.9	9.8	28.7	7.0	-5.5	18.4	-20.4	8"x10"	2 @ 1-1/4"	
RLL = 40 psf	COL 2	-4.0	11.9	-9.8	28.7	18.4	-20.4	-7.0	-5.5	8"x10"	2 @ 1-1/4"	
1@50' x 30'	COL 1	3.2	12.0	4.3	15.9	7.3	0.2	13.4	-14.3	8"x10"	2 @ 1"	
RLL = 20 psf	COL 2	-3.2	12.0	-4.3	15.9	13.4	-14.3	-7.3	0.2	8"x10"	2 @ 1"	
1@50' x 30'	COL 1	3.0	12.0	5.8	22.3	7.4	0.1	13.2	-14.2	8"x10"	2 @ 1"	
RLL = 30 psf	COL 2	-3.0	12.0	-5.8	22.3	13.2	-14.2	-7.4	0.1	8"x10"	2 @ 1"	
1@50' x 30'	COL 1	3.2	12.4	8.0	29.1	11.1	-1.1	21.4	-24.0	8"x10"	2 @ 1-1/4"	
RLL = 40 psf	COL 2	-3.2	12.4	-8.0	29.1	21.4	-24.0	11.1	-1.1	8"x10"	2 @ 1-1/4"	

**** *For 18' eave height, tapered beam frames, baseplate length = 12".*
**** *For 20' eave height, tapered beam frames, baseplate length = 14".*

28.3K/40psf = 707.5SF/(50FT SPAN/2)
28.3FT C/C BAY SPACING

ARCADIS

SUBJECT: TOPOK – WORKSHOP BLDG

JOB NO:

BY: MSL DATE: 1/6/15

CHKD: MSL DATE: 1/6/15

PAGE I-9

SHEET 1

(NUCOR LOADS CON'T)

1. • $D + L_r$
2. • $D + 0.75L_r + (0.6 \times 0.45/0.75)W_L$ (2A) ← W_{IR}
3. • $D + 0.6W_L$ (3A) ← W_{IR}
4. • $0.6D + 0.6W_L$ (4A) ← W_{IR}

COLUMN #1: 8.94K →, 0.15K ↑

COLUMN #2: 5.34K ←, 4.83K ↑

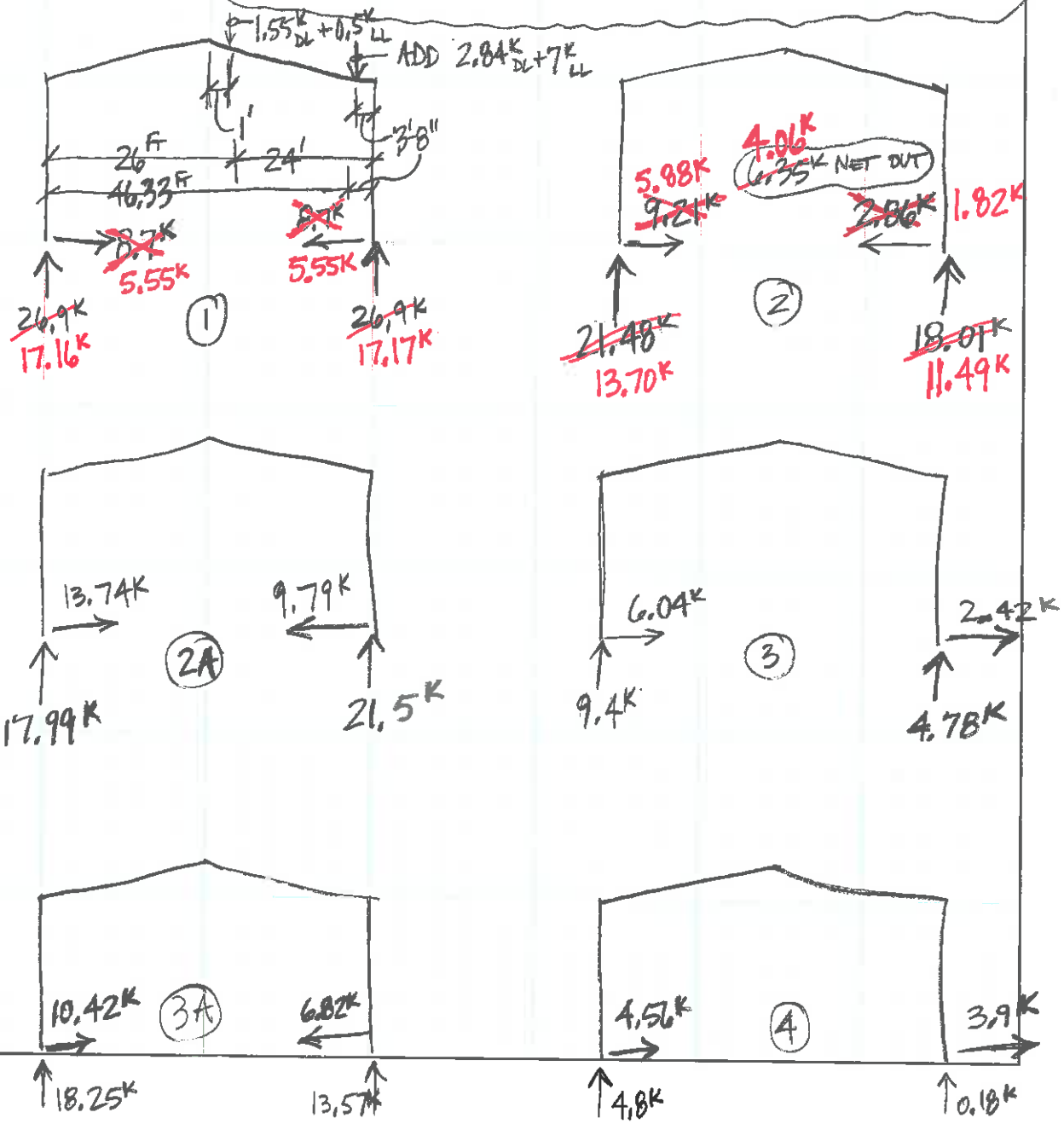

AGM Form 30 12-01

ARCADIS

SUBJECT: TOPOK – WORKSHOP BLDG

JOB NO:

BY: MSL DATE: 1/6/15

CHKD: MSL DATE: 1/6/15

PAGE I-10

SHEET 1

(NUCOR LOADS CON'T)

~ UPDATED LC#1 COLUMN #2 REACTION W/ CRANE LOAD

$$\Sigma \; \cancel{26.9^K}\,17.16^K \uparrow + \frac{P_a}{\ell_{50'}} + \frac{P_a}{\ell_{50'}} = \cancel{26.9^K}\,17.16^K + 1.066^K + 9.12^K$$

P_a: 2.05K, 26'; 9.84K, 46.33'

$$= \cancel{37.09^K}\,27.35 \downarrow$$

AGM Form 30 12-01

ARCADIS

SUBJECT: TOPOK- WORKSHOP BLDG
FOUNDATION DESIGN

JOB NO:

BY: MSL DATE: 1/6/15

CHKD: DATE:

PAGE I-11

SHEET 1

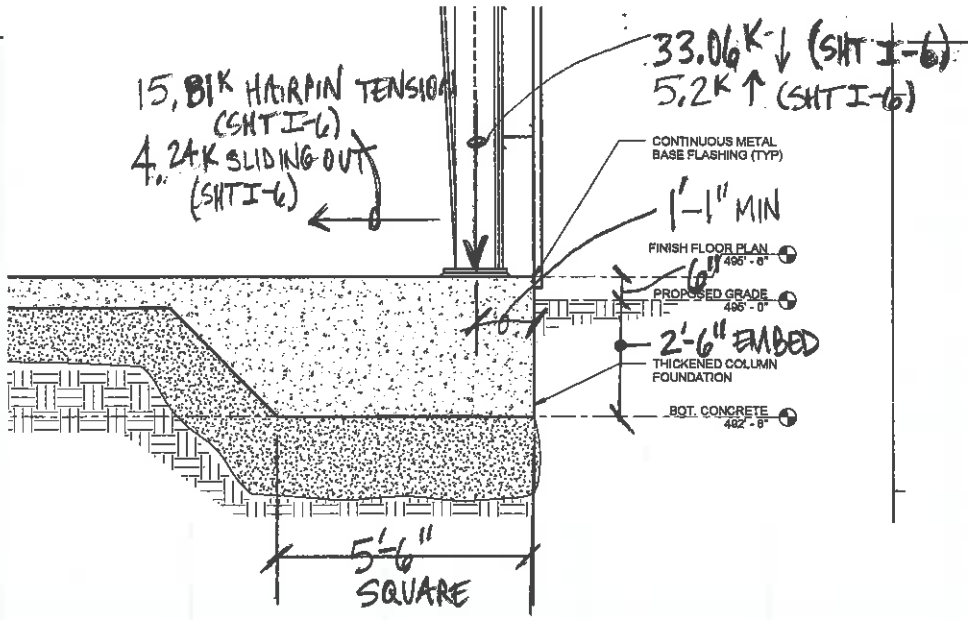

- NET ALLOWABLE BEARING PRESSURE = 2,000 psf.
- CHECK 5'-6" SQ FTG:
  - $\Sigma P = 33.06^K \downarrow + (5.5^{FT} \times 5.5^{FT} \times 3^{THICK} \times 150^{pcf})$ (13.61K)
    $= 46.67^K$
  - $A = 30.25^{FT^2}$, $y = 2.75^{FT}$, $I = \frac{bh^3}{12} = 76.26^{FT^4}$ (5.5FT)
  - $\circlearrowleft \Sigma M_{\mathcal{L}} = (33.06^K) \times (2.75^{FT} - 1.083') = 55.11^{K\cdot FT}$ 4.707' < 5.5
  - $q = P/A +/- My/I = 1.543^{KSF} +/- 1.987^{KSF}$ ← NO GOOD
  - $e = M/P = 1.181^{FT} \rightarrow f_p \times 0.5 \times 5.5^{FT} \times [3 \times (2.75' - 1.181')] = 46.67$
    $f_p = 3.61^{KSF} > 2^{KSF}$ ~ NO GOOD
- USE 5'-6" WIDE × 4'-6"
  - $\Sigma P = 46.61^K$, $A = 24.75^{FT^2}$, $y = 2.25'$, $I = 41.77^{FT^4}$, $\circlearrowleft M_{\mathcal{L}} = 41.39^{K\cdot FT}$
  - $q = P/A + My/I = 1.883^{KSF} +/- 2.29^{KSF}$ ~ NO GOOD
  - $e = M/P = 0.889^{FT} \rightarrow f_p \times 0.5 \times 5.5^{FT} \times [3 \times (2.25' - 1.083')] = 46.61^K$ (3.501K < 4.5FT)
    $f_p = 4.84^{KSF} > 2^{KSF}$ ~ NO GOOD

AGM Form 30 12-01

(FDN DESIGN CONT)

- LC#3 & 4 DL + Lr + Lrr IS TOO CONSERVATIVE FOR MAX GRAVITY LOADS
  - USE WORST CASE 1, 2, & 9 THRU 12
    - 30.2K ↓ (LC#12)
    - 13.79K (LC#11) → HAIRPIN TENSION

→ USE 5'-6" SQ FTG (EVEN IF FOOTING CENTERED UNDER COLUMN) = 43.81/2 KSF = √21.91 SF = 4.68 FT ✓ OK

- ΣP = 43.81K, A, y, & I ON SHT I-11
- ΣM_℄ = 50.34 K'FT
- q = P/A +/- My/I = 1.448 KSF +/- 1.815 KSF ~ NO GOOD 4.803' < 5.5'
- e = M/P = 1.149 FT → fp × 0.5 × 5.5' × [3 × (2.75' − 1.149')] = 43.81K

  fp = 3.317 KSF > 2 KSF NO GOOD

→ TRY 6'-0" SQ FTG

- ΣP = 46.4K, A = 36 SF, y = 3', I = 108 FT⁴, ΣM_℄ = 57.89 K'FT
- q = P/A +/- My/I = 1.289 KSF +/- 1.608 KSF 5.256 FT < 6 FT
- e = M/P = 1.248 FT → fp × 6' × 0.5 × [3 × (3' − 1.248')] = 46.4K

  fp = 2.943 KSF > 2 KSF NO GOOD

→ TRY 6'-6" SQ FTG

- ΣP = 49.21K, A = 42.25 FT, y = 3.25 FT, I = 148.76 FT⁴, ΣM_℄ = 65.05 K'
- q = P/A +/- My/I = 1.165 KSF +/- 1.421 KSF ~ NO GOOD 5.78' < 6.5'
- e = M/P = 1.322 → fp × 6.5' × 0.5 × [3 × (3.25' − 1.322')] = 49.21K

  fp = 2.62 KSF > 2 KSF ← NO GOOD

ARCADIS

SUBJECT: TOPOK – WORKSHOP BLDG FDN DESIGN

JOB NO:

BY: MSL DATE: 1/7/15

CHKD: DATE:

PAGE I-13

SHEET 1

(FDN DESIGN CON'T)

→ USE 6'-0" ∥ TO SPAN × 8'-0" FTG ← INTERIOR FRAME COLUMNS

- $\Sigma P = 51.8^K$, $A = 48 FT^2$, $y = 3'$, $I = 144 FT^4$, $\Sigma M_{\mathbb{C}} = 57.55^{K'F}$
- $q = P/A +/- My/I = 1.079 KSF +/- 1.199 KSF$
- $e = M/P = 1.111 FT \rightarrow f_p \times 8' \times 0.5 \times [\overbrace{3 \times (3' - 1.111')}^{5.667'}] = 51.8^K$

$f_p = 2.29 KSF \approx 2 KSF$ NET ALLOWABLE
+ (2.5' OVERBURDEN × 110 pcf)
2.28 KSF ✓ OK

END FRAME

→ TRIB AREA = $\frac{\text{END FRAME}}{\text{INT FRAME}} = \frac{10.875'}{19.125'} = 0.569$

× $\frac{(51.2\% \uparrow \text{ IN LAST 5 FEET END FRAME}) + [(10.875' - 5') \times 1.0]}{10.875'} = 1.23$

× 25.8^K (LC#1) ← i.e. minimal bridge crane DL included

$= 18.17^K \downarrow$ ← CONSERVATIVE B/C MID-SPAN COLUMN SHOULD TAKE SOME DEAD LOAD

→ USE 4'-6" ∥ TO SPAN × 4'-6" FTG

- $\Sigma P = 27.28^K$, $A = 20.25 FT^2$, $y = 2'-3"$, $I = 34.17 FT^4$, $\Sigma M_{CL} = 21.20^{K'}$
- $q = P/A - My/I = 1.347 KSF +/- 1.396 KSF$ ← NO GOOD
- $e = M/P = 0.777' \rightarrow f_p \times 4.5' \times 0.5' \times [\underbrace{3 \times (2.25' - 0.777')}_{4.42' < 4.5'}] = 27.28^K$

$f_p = 2.74 KSF > 2.28 KSF$ ~ NO GOOD

→ TRY 5'-0" SQ ← USE 5'-3" SQ

- $\Sigma P = 29.42^K$, $A = 25 FT^2$, $y = 2.5'$, $I = 52.08 FT^4$, $\Sigma M_{\mathbb{C}} = 25.75^{K'F}$
- $q = 1.177 KSF +/- 1.236 KSF$ ~ NO GOOD
- $e = M/P = 0.875' \rightarrow f_p \times 5' \times 0.5 \times [\overbrace{3 \times (2.5' - 0.875')}^{4.875' < 5'}] = 29.42^K$

$f_p = 2.41 KSF \approx 2.28 KSF$

ARCADIS

SUBJECT: TOPOK – WORKSHOP BLDG
FDN DESIGN

JOB NO:

BY: MSL DATE: 1/7/15

CHKD: DATE:

PAGE I-14

SHEET 1

(FDN DESIGN CON'T)

SLIDING RESISTANCE

- SLIDING OUT = 4.24^{K}_{UNF} (SHT I-6)
- SLIDING RESISTANCE =

→ 688 psf × 0.5 × 2.5' × 8' WIDE FTG = 6.88K PASSIVE SOIL RESISTANCE

(110 pcf) × (3 − 0.5) × 2.5' EMBED = 688 psf

= DL FRICTION → $(21.6^{K}_{FDN\ DL} - 5.2^{K}_{UPLIFT}) \times 0.3\mu \times 0.6DL = 2.95^{K}$

→ $9.83^{K} > 4.24^{K}_{SLIDING}$ ~ FS = 2.31 > 1.5 ✓OK

UPLIFT RESISTANCE

- MAX UPLIFT = 5.2^{K}_{UNF} (SHT I-6)
- 6' × 8' INT FRAME FDN DL = 6' × 8' × 3' THICK × 150 pcf × 0.6DL = 12.96K
  - FS = 2.49 > 1.5 ✓OK
- MAX END FRAME UPLIFT = 5.2K × 0.569 (TRIB AREA) × 1.2381 (END FRAME INCREASE) = 3.67K↑
- 5'-3" SQ FDN END FRAME DL = 5'-3" SQ × 3' THICK × 150 pcf × 0.6DL = 7.44K
  - FS = 2.028 > 1.5 ✓OK

TENSION RESISTANCE

- MAX TENSION = 15.81^{K}_{UNF} (SHT I-6)
- HAIRPIN SIZE REQ'D = $A_s = \frac{T}{\phi F_y} = \frac{15.81^{K} \times 1.6_{ACI}}{0.9 \times 60_{ksi}} = 0.47\ in^2/ft$

  20.54K
  LC#27 1.2DL + 1.6L_r + 1.0L_r + 0.5W2
  CONSERVATIVE LOAD CASE

→ #6 HAIRPIN USED ($A_s = 0.44\ in^2/ft$) ✓OK ≈

AGM Form 30 12-01

FDN PRESTEEL DESIGN

- SINCE 6'x8' INTERIOR FRAME IS HEAVIEST LOADED & LARGEST FTG SIZE, WILL BASE PRESTEEL DESIGN BASED ON THAT

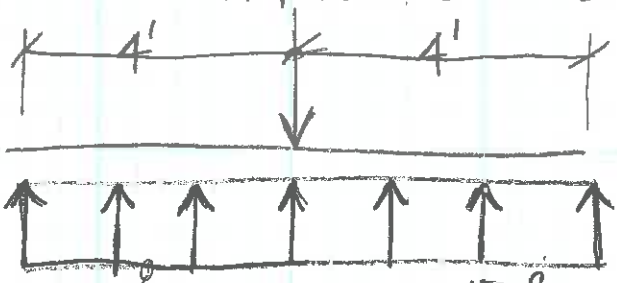

$2.29\,KSF_{GROSS} - (3' \times 150\,pcf)_{UNF} = 1.84\,KSF_{UNF}$ (450 psf)

~ BOT STL

- $M_{ACI} = \frac{wl^2}{2} = \frac{(1.84\,KSF_{UNF} \times 1.6_{ACI}) \times 4_{FT}^2}{2} = 23.55^{K'FT}$
- $V_{ACI} = wl = 11.78^K$
- $\phi V_c = 2\phi\sqrt{f'_c}\,bd = 2(0.75)(\sqrt{4500})(12)(31.5^{IN}) = 35.86^K > V_{ACI}$ ✓OK
  ~ $d = 36'' - 3''$ COVER $- 8/8'' - 8/16'' = 31.5''$
- $R = M_U/\phi bd^2 = 26.37 \rightarrow \rho = 0.00045 \rightarrow A_s = 4/3\,\rho bd = 0.23\,IN^2/FT$
  → USE #6@11"o/c ($A_s = 0.47\,IN^2/FT$) > ✓OK

~ TOP STL

- $M_{ACI} = \frac{wl^2}{2} = \frac{(3' \times 150\,pcf)_{UNF} \times 1.6_{ACI} \times 4_{FT}^2}{2} = 5.76^{K'FT}$
- $V_{ACI} = wl = 2.88^K << \phi V_c$ ✓OK
  ~ $d = 36'' - 2''$ COVER $- 8/8'' - 8/16'' = 32.5''$
- $R = 6.06 \rightarrow \rho = 0.0001 \rightarrow A_s = 4/3\,\rho bd = 0.053\,IN^2/FT <<$

I-16

Company:	ARCADIS	Page:	1
Specifier:	Matt Lotycz	Project:	Topok Workshop Bldg
Address:		Sub-Project I Pos. No.:	Interior Frame Column
Phone I Fax:		Date:	1/7/2015
E-Mail:			

Specifier's comments: Base Plate Anchorage - Worst Case ACI Factored Shear

1 Input data

Anchor type and diameter:	**Heavy Hex Head ASTM F 1554 GR. 36 1**
Effective embedment depth:	h_{ef} = 24.000 in.
Material:	ASTM F 1554
Proof:	design method ACI 318-11 / CIP
Stand-off installation:	e_b = 0.000 in. (no stand-off); t = 0.500 in.
Anchor plate:	l_x x i_y x t = 9.000 in. x 12.000 in. x 0.500 in.; (Recommended plate thickness: not calculated)
Profile:	W shape (AISC); (L x W x T x FT) = 10.100 in. x 8.020 in. x 0.350 in. x 0.620 in.
Base material:	cracked concrete, 4000, f_c' = 4000 psi; h = 36.000 in.
Reinforcement:	tension: condition B, shear: condition B;
	edge reinforcement: > No. 4 bar

(LC#27) FACTORED (SHT I-7)
MAX SHEAR
1.2DL + 1.6Lr + 1.0 Lr CRANE + 0.5W

Geometry [in.] & Loading [lb, in.lb]

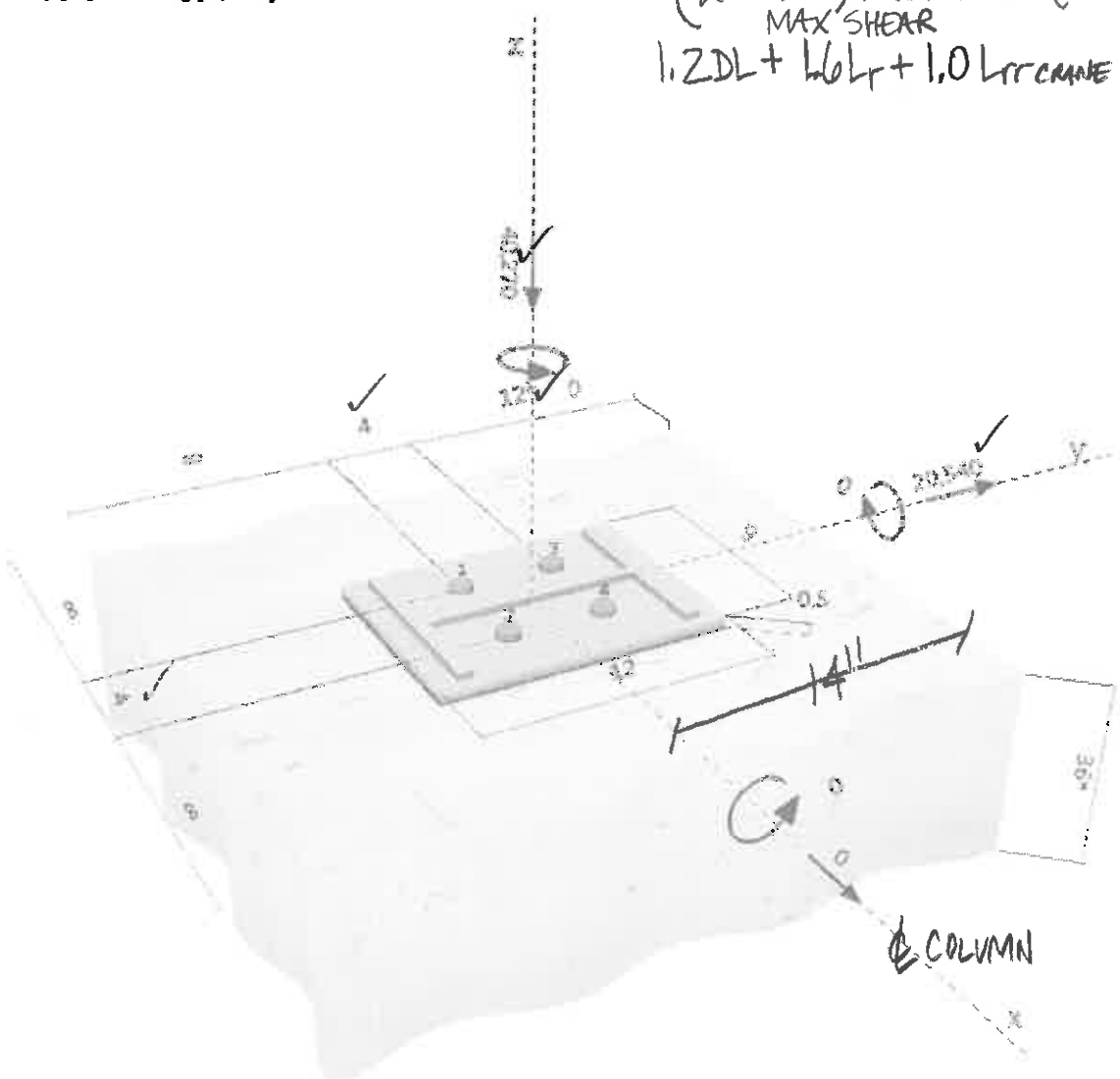

PROFIS Anchor (c) 2003-2009 Hilti AG, FL-9494 Schaan Hilti is a registered Trademark of Hilti AG, Schaan

Company:	ARCADIS	Page:	2
Specifier:	Matt Lotycz	Project:	Topok Workshop Bldg
Address:		Sub-Project I Pos. No.:	Interior Frame Column
Phone I Fax:		Date:	1/7/2015
E-Mail:			

2 Load case/Resulting anchor forces

Load case: Design loads

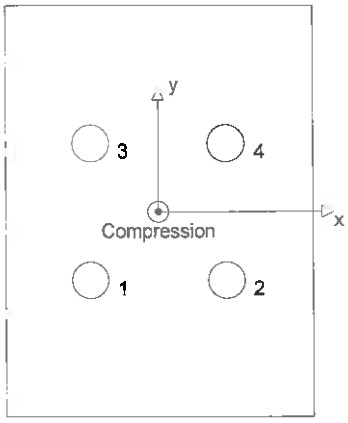

Anchor reactions [lb]
Tension force: (+Tension, -Compression)

Anchor	Tension force	Shear force	Shear force x	Shear force y
1	0	5135	0	5135
2	0	5135	0	5135
3	0	5135	0	5135
4	0	5135	0	5135

max. concrete compressive strain: 0.09 [‰]
max. concrete compressive stress: 373 [psi]
resulting tension force in (x/y)=(0.000/0.000): 0 [lb]
resulting compression force in (x/y)=(0.000/0.000): 40270 [lb]

3 Tension load

	Load N_{ua} [lb]	Capacity ϕN_n [lb]	Utilization $\beta_N = N_{ua}/\phi N_n$	Status
Steel Strength*	N/A	N/A	N/A	N/A
Pullout Strength*	N/A	N/A	N/A	N/A
Concrete Breakout Strength**	N/A	N/A	N/A	N/A
Concrete Side-Face Blowout, direction **	N/A	N/A	N/A	N/A

* anchor having the highest loading **anchor group (anchors in tension)

PROFIS Anchor (c) 2003-2009 Hilti AG, FL-9494 Schaan Hilti is a registered Trademark of Hilti AG, Schaan

4 Shear load

	Load V_{ua} [lb]	Capacity ϕV_n [lb]	Utilization $\beta_V = V_{ua}/\phi V_n$	Status
Steel Strength*	5135	13708	38	OK
Steel failure (with lever arm)*	N/A	N/A	N/A	N/A
Pryout Strength**	20540	172533	12	OK
Concrete edge failure in direction y+**	20540	22084	94	OK

* anchor having the highest loading **anchor group (relevant anchors)

4.1 Steel Strength

$V_{sa} = n\ 0.6\ A_{se,V}\ f_{uta}$ ACI 318-11 Eq. (D-29)

$\phi\ V_{steel} \geq V_{ua}$ ACI 318-11 Table D.4.1.1

Variables

n	$A_{se,V}$ [in.^{2}]	f_{uta} [psi]
1	0.61	58000

Calculations

V_{sa} [lb]
21089

Results

V_{sa} [lb]	ϕ_{steel}	$\phi\ V_{sa}$ [lb]	V_{ua} [lb]
21089	0.650	13708	5135

4.2 Pryout Strength

$V_{cpg} = k_{cp}\left[\left(\frac{A_{Nc}}{A_{Nc0}}\right)\psi_{ec,N}\ \psi_{ed,N}\ \psi_{c,N}\ \psi_{cp,N}\ N_b\right]$ ACI 318-11 Eq. (D-41)

$\phi\ V_{cpg} \geq V_{ua}$ ACI 318-11 Table D.4.1.1

A_{Nc} see ACI 318-11, Part D.5.2.1, Fig. RD.5.2.1(b)

$A_{Nc0} = 9\ h_{ef}^2$ ACI 318-11 Eq. (D-5)

$\psi_{ec,N} = \left(\frac{1}{1 + \frac{2\ e_N}{3\ h_{ef}}}\right) \leq 1.0$ ACI 318-11 Eq. (D-8)

$\psi_{ed,N} = 0.7 + 0.3\left(\frac{c_{a,min}}{1.5h_{ef}}\right) \leq 1.0$ ACI 318-11 Eq. (D-10)

$\psi_{cp,N} = \text{MAX}\left(\frac{c_{a,min}}{c_{ac}}, \frac{1.5h_{ef}}{c_{ac}}\right) \leq 1.0$ ACI 318-11 Eq. (D-12)

$N_b = 16\ \lambda_a \sqrt{f'_c}\ h_{ef}^{5/3}$ ACI 318-11 Eq. (D-7)

Variables

k_{cp}	h_{ef} [in.]	$e_{c1,N}$ [in.]	$e_{c2,N}$ [in.]	$c_{a,min}$ [in.]
2	24.000	0.000	0.000	12.000

$\psi_{c,N}$	c_{ac} [in.]	k_c	λ_a	f'_c [psi]
1.000	-	16	1.000	4000

Calculations

A_{Nc} [in.^{2}]	A_{Nc0} [in.^{2}]	$\psi_{ec1,N}$	$\psi_{ec2,N}$	$\psi_{ed,N}$	$\psi_{cp,N}$	N_b [lb]
3952.00	5184.00	1.000	1.000	0.800	1.000	202070

Results

V_{cpg} [lb]	$\phi_{concrete}$	$\phi\ V_{cpg}$ [lb]	V_{ua} [lb]
246475	0.700	172533	20540

PROFIS Anchor (c) 2003-2009 Hilti AG, FL-9494 Schaan Hilti is a registered Trademark of Hilti AG, Schaan

4.3 Concrete edge failure in direction y+

$V_{cbg} = \left(\frac{A_{Vc}}{A_{Vc0}}\right) \psi_{ec,V}\ \psi_{ed,V}\ \psi_{c,V}\ \psi_{h,V}\ \psi_{parallel,V}\ V_b$ — ACI 318-11 Eq. (D-31)

$\phi\ V_{cbg} \geq V_{ua}$ — ACI 318-11 Table D.4.1.1

A_{Vc} see ACI 318-11, Part D.6.2.1, Fig. RD.6.2.1(b)

$A_{Vc0} = 4.5\ c_{a1}^2$ — ACI 318-11 Eq. (D-32)

$\psi_{ec,V} = \left(\frac{1}{1 + \frac{2e_v}{3c_{a1}}}\right) \leq 1.0$ — ACI 318-11 Eq. (D-36)

$\psi_{ed,V} = 0.7 + 0.3\left(\frac{c_{a2}}{1.5c_{a1}}\right) \leq 1.0$ — ACI 318-11 Eq. (D-38)

$\psi_{h,V} = \sqrt{\frac{1.5c_{a1}}{h_a}} \geq 1.0$ — ACI 318-11 Eq. (D-39)

$V_b = 9\ \lambda_a \sqrt{f'_c}\ c_{a1}^{1.5}$ — ACI 318-11 Eq. (D-34)

Variables

c_{a1} [in.]	c_{a2} [in.]	e_{cV} [in.]	$\psi_{c,V}$	h_a [in.]
12.000	-	0.000	1.200	36.000

l_e [in.]	λ_a	d_a [in.]	f'_c [psi]	$\psi_{parallel,V}$
8.000	1.000	1.000	4000	1.000

Calculations

A_{Vc} [in.^{2}]	A_{Vc0} [in.^{2}]	$\psi_{ec,V}$	$\psi_{ed,V}$	$\psi_{h,V}$	V_b [lb]
720.00	648.00	1.000	1.000	1.000	23662

Results

V_{cbg} [lb]	$\phi_{concrete}$	$\phi\ V_{cbg}$ [lb]	V_{ua} [lb]
31549	0.700	22084	20540

5 Warnings

- Load re-distributions on the anchors due to elastic deformations of the anchor plate are not considered. The anchor plate is assumed to be sufficiently stiff, in order not to be deformed when subjected to the loading!
- Condition A applies when supplementary reinforcement is used. The Φ factor is increased for non-steel Design Strengths except Pullout Strength and Pryout strength. Condition B applies when supplementary reinforcement is not used and for Pullout Strength and Pryout Strength. Refer to your local standard.
- Checking the transfer of loads into the base material and the shear resistance are required in accordance with ACI 318 or the relevant standard!

Fastening meets the design criteria! ✓

PROFIS Anchor (c) 2003-2009 Hilti AG, FL-9494 Schaan Hilti is a registered Trademark of Hilti AG, Schaan

6 Installation data

Anchor plate, steel: -
Profile: W shape (AISC); 10.100 x 8.020 x 0.350 x 0.620 in.
Hole diameter in the fixture: d_f = 1.063 in.
Plate thickness (input): 0.500 in.
Recommended plate thickness: not calculated
Cleaning: No cleaning of the drilled hole is required

Anchor type and diameter: Heavy Hex Head ASTM F 1554 GR. 36 1
Installation torque: -0.009 in.lb
Hole diameter in the base material: - in.
Hole depth in the base material: 24.000 in.
Minimum thickness of the base material: 26.172 in.

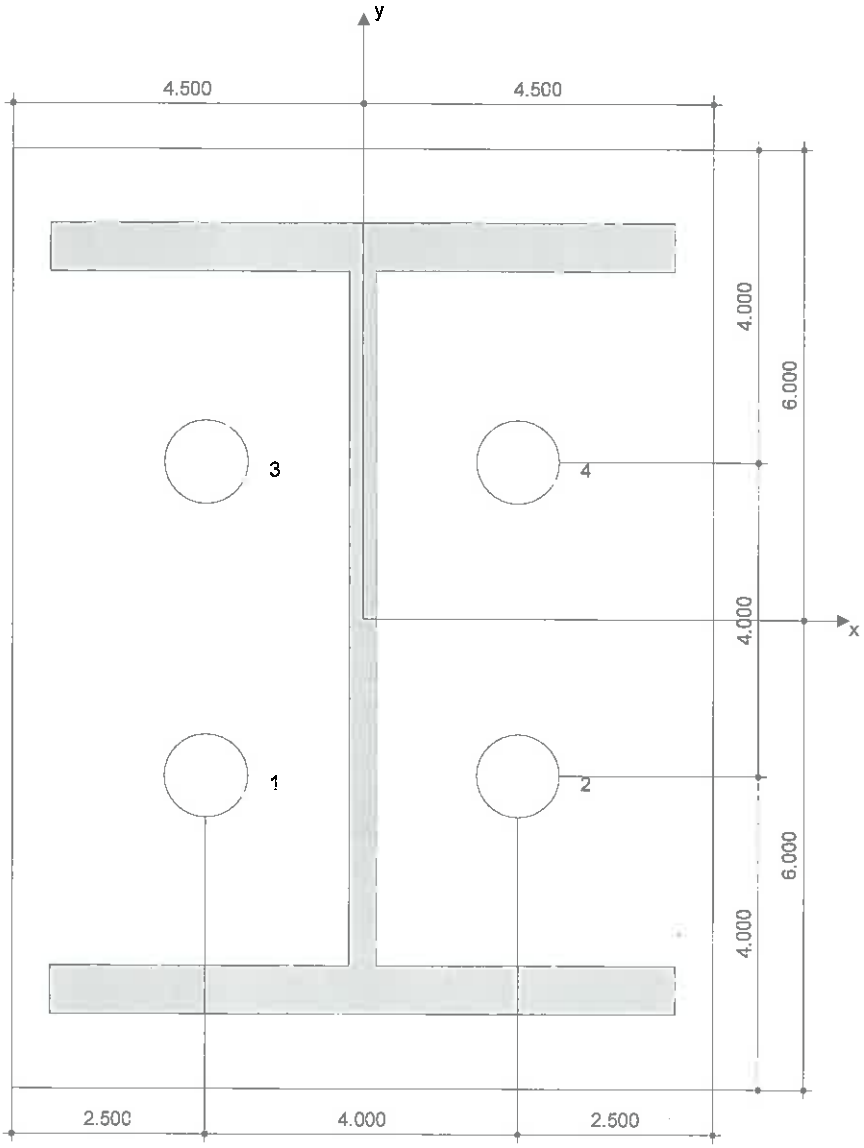

Coordinates Anchor in.

Anchor	x	y	c_{-x}	c_{+x}	c_{-y}	c_{+y}
1	-2.000	-2.000	-	-	-	16.000
2	2.000	-2.000	-	-	-	16.000
3	-2.000	2.000	-	-	-	12.000
4	2.000	2.000	-	-	-	12.000

PROFIS Anchor (c) 2003-2009 Hilti AG, FL-9494 Schaan Hilti is a registered Trademark of Hilti AG, Schaan

7 Remarks; Your Cooperation Duties

- Any and all information and data contained in the Software concern solely the use of Hilti products and are based on the principles, formulas and security regulations in accordance with Hilti's technical directions and operating, mounting and assembly instructions, etc., that must be strictly complied with by the user. All figures contained therein are average figures, and therefore use-specific tests are to be conducted prior to using the relevant Hilti product. The results of the calculations carried out by means of the Software are based essentially on the data you put in. Therefore, you bear the sole responsibility for the absence of errors, the completeness and the relevance of the data to be put in by you. Moreover, you bear sole responsibility for having the results of the calculation checked and cleared by an expert, particularly with regard to compliance with applicable norms and permits, prior to using them for your specific facility. The Software serves only as an aid to interpret norms and permits without any guarantee as to the absence of errors, the correctness and the relevance of the results or suitability for a specific application.
- You must take all necessary and reasonable steps to prevent or limit damage caused by the Software. In particular, you must arrange for the regular backup of programs and data and, if applicable, carry out the updates of the Software offered by Hilti on a regular basis. If you do not use the AutoUpdate function of the Software, you must ensure that you are using the current and thus up-to-date version of the Software in each case by carrying out manual updates via the Hilti Website. Hilti will not be liable for consequences, such as the recovery of lost or damaged data or programs, arising from a culpable breach of duty by you.

PROFIS Anchor (c) 2003-2009 Hilti AG, FL-9494 Schaan Hilti is a registered Trademark of Hilti AG, Schaan

I-17

www.hilti.us

Profis Anchor 2.4.8

Company:	ARCADIS	Page:	1
Specifier:	Matt Lotycz	Project:	Topok Workshop Bldg
Address:		Sub-Project I Pos. No.:	Interior Frame Column
Phone I Fax:	I	Date:	1/7/2015
E-Mail:			

Specifier's comments: Base Plate Anchorage - Worst Case ACI Uplift with associated Shear

1 Input data

Anchor type and diameter:	**Heavy Hex Head ASTM F 1554 GR. 36 1**
Effective embedment depth:	h_{ef} = 24.000 in.
Material:	ASTM F 1554
Proof:	design method ACI 318-11 / CIP
Stand-off installation:	e_b = 0.000 in. (no stand-off); t = 0.500 in.
Anchor plate:	l_x x l_y x t = 9.000 in. x 12.000 in. x 0.500 in.; (Recommended plate thickness: not calculated)
Profile:	W shape (AISC); (L x W x T x FT) = 10.100 in. x 8.020 in. x 0.350 in. x 0.620 in.
Base material:	cracked concrete, 4000, f'_c = 4000 psi; h = 36.000 in.
Reinforcement:	tension: condition B, shear: condition B; edge reinforcement: > No. 4 bar

LC# 36 FACTORED (SHT I-7)
MAX UPLIFT
0.9 DL + 1.0W

Geometry [in.] & Loading [lb, in.lb]

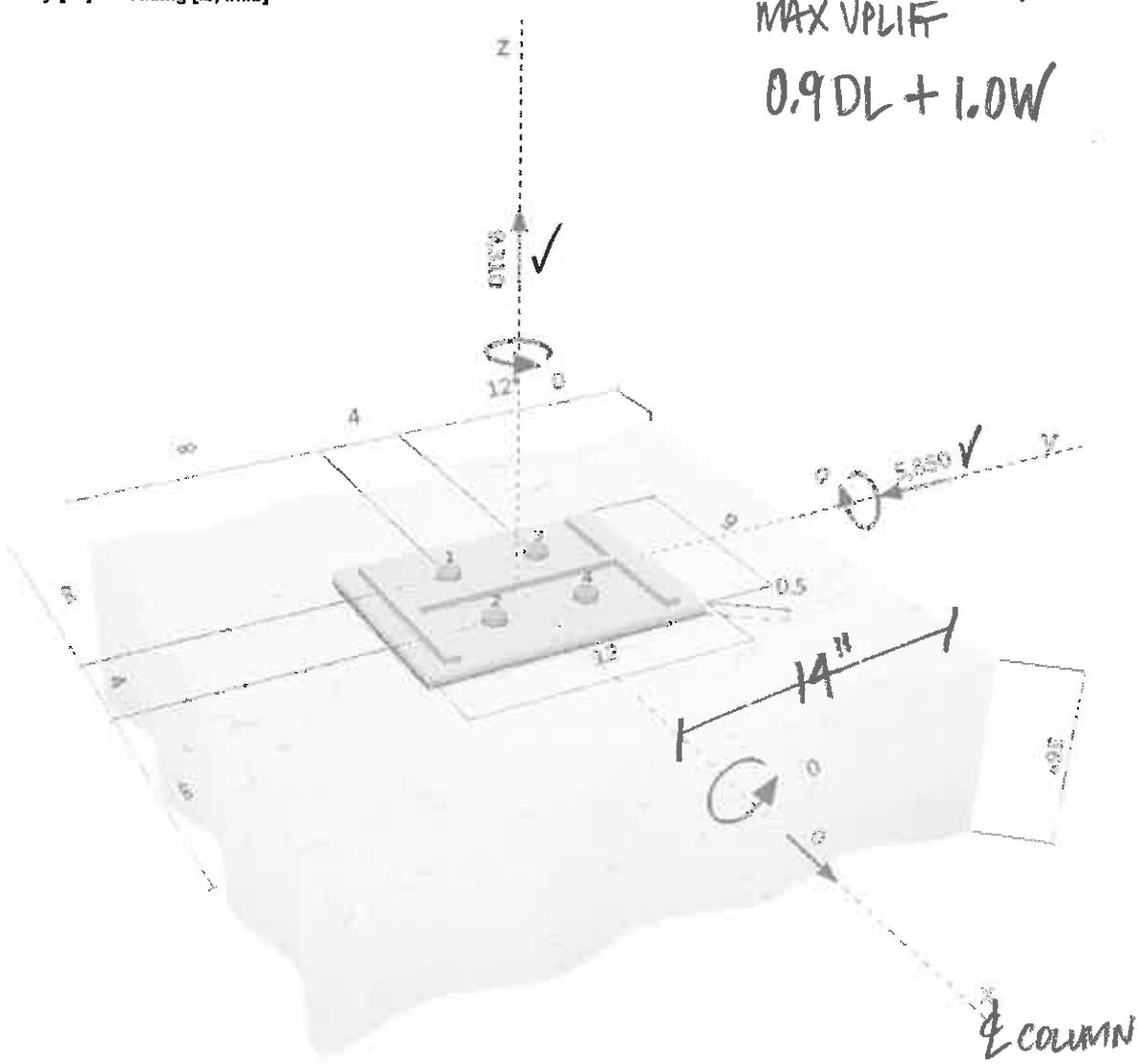

PROFIS Anchor (c) 2003-2009 Hilti AG, FL-9494 Schaan Hilti is a registered Trademark of Hilti AG, Schaan

Company:	ARCADIS	Page:	2
Specifier:	Matt Lotycz	Project:	Topok Workshop Bldg
Address:		Sub-Project I Pos. No.:	Interior Frame Column
Phone I Fax:		Date:	1/7/2015
E-Mail:			

2 Load case/Resulting anchor forces

Load case: Design loads

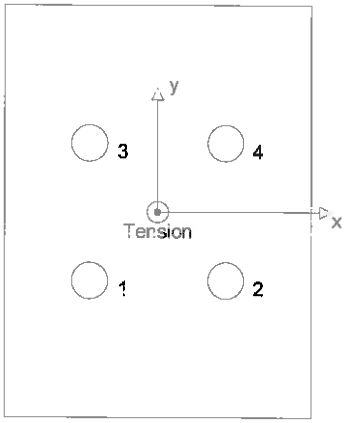

Anchor reactions [lb]

Tension force: (+Tension, -Compression)

Anchor	Tension force	Shear force	Shear force x	Shear force y
1	2328	1463	0	-1463
2	2328	1463	0	-1463
3	2328	1463	0	-1463
4	2328	1463	0	-1463

max. concrete compressive strain: - [‰]
max. concrete compressive stress: - [psi]
resulting tension force in (x/y)=(0.000/0.000): 9310 [lb]
resulting compression force in (x/y)=(0.000/0.000): 0 [lb]

3 Tension load

	Load N_{ua} [lb]	Capacity ϕN_n [lb]	Utilization $\beta_N = N_{ua}/\phi N_n$	Status
Steel Strength*	2328	26361	9	OK
Pullout Strength*	2328	33622	7	OK
Concrete Breakout Strength**	9310	86266	11	OK
Concrete Side-Face Blowout, direction **	N/A	N/A	N/A	N/A

* anchor having the highest loading **anchor group (anchors in tension)

3.1 Steel Strength

$N_{sa} = n\, A_{se,N}\, f_{uta}$ ACI 318-11 Eq. (D-2)
$\phi\, N_{steel} \geq N_{ua}$ ACI 318-11 Table D.4.1.1

Variables

n	$A_{se,N}$ [in.^{2}]	f_{uta} [psi]
1	0.61	58000

Calculations

N_{sa} [lb]
35148

Results

N_{sa} [lb]	ϕ_{steel}	$\phi\, N_{sa}$ [lb]	N_{ua} [lb]
35148	0.750	26361	2328

3.2 Pullout Strength

$N_{pN} = \psi_{c,p}\, N_p$ ACI 318-11 Eq. (D-13)
$N_p = 8\, A_{brg}\, f'_c$ ACI 318-11 Eq. (D-14)
$\phi\, N_{pN} \geq N_{ua}$ ACI 318-11 Table D.4.1.1

Variables

$\psi_{c,p}$	A_{brg} [in.^{2}]	λ_a	f'_c [psi]
1.000	1.50	1.000	4000

Calculations

N_p [lb]
48032

Results

N_{pn} [lb]	$\phi_{concrete}$	$\phi\, N_{pn}$ [lb]	N_{ua} [lb]
48032	0.700	33622	2328

PROFIS Anchor (c) 2003-2009 Hilti AG, FL-9494 Schaan Hilti is a registered Trademark of Hilti AG, Schaan

Company:	ARCADIS	Page:	3
Specifier:	Matt Lotycz	Project:	Topok Workshop Bldg
Address:		Sub-Project I Pos. No.:	Interior Frame Column
Phone I Fax:	|	Date:	1/7/2015
E-Mail:			

3.3 Concrete Breakout Strength

$N_{cbg} = \left(\frac{A_{Nc}}{A_{Nc0}}\right) \psi_{ec,N}\, \psi_{ed,N}\, \psi_{c,N}\, \psi_{cp,N}\, N_b$ — ACI 318-11 Eq. (D-4)

$\phi\, N_{cbg} \geq N_{ua}$ — ACI 318-11 Table D.4.1.1

A_{Nc} see ACI 318-11, Part D.5.2.1, Fig. RD.5.2.1(b)

$A_{Nc0} = 9\, h_{ef}^2$ — ACI 318-11 Eq. (D-5)

$\psi_{ec,N} = \left(\frac{1}{1 + \frac{2\, e_N}{3\, h_{ef}}}\right) \leq 1.0$ — ACI 318-11 Eq. (D-8)

$\psi_{ed,N} = 0.7 + 0.3 \left(\frac{c_{a,min}}{1.5 h_{ef}}\right) \leq 1.0$ — ACI 318-11 Eq. (D-10)

$\psi_{cp,N} = \mathrm{MAX}\left(\frac{c_{a,min}}{c_{ac}}, \frac{1.5 h_{ef}}{c_{ac}}\right) \leq 1.0$ — ACI 318-11 Eq. (D-12)

$N_b = 16\, \lambda_a \sqrt{f'_c}\, h_{ef}^{5/3}$ — ACI 318-11 Eq. (D-7)

Variables

h_{ef} [in.]	$e_{c1,N}$ [in.]	$e_{c2,N}$ [in.]	$c_{a,min}$ [in.]	$\psi_{c,N}$
24.000	0.000	0.000	12.000	1.000

c_{ac} [in.]	k_c	λ_a	f'_c [psi]
-	16	1.000	4000

Calculations

A_{Nc} [in.^{2}]	A_{Nc0} [in.^{2}]	$\psi_{ec1,N}$	$\psi_{ec2,N}$	$\psi_{ed,N}$	$\psi_{cp,N}$	N_b [lb]
3952.00	5184.00	1.000	1.000	0.800	1.000	202070

Results

N_{cbg} [lb]	$\phi_{concrete}$	$\phi\, N_{cbg}$ [lb]	N_{ua} [lb]
123238	0.700	86266	9310

PROFIS Anchor (c) 2003-2009 Hilti AG, FL-9494 Schaan Hilti is a registered Trademark of Hilti AG, Schaan

4 Shear load

	Load V_{ua} [lb]	Capacity ϕV_n [lb]	Utilization $\beta_V = V_{ua}/\phi V_n$	Status
Steel Strength*	1463	13708	11	OK
Steel failure (with lever arm)*	N/A	N/A	N/A	N/A
Pryout Strength**	5850	172533	4	OK
Concrete edge failure in direction **	N/A	N/A	N/A	N/A

* anchor having the highest loading **anchor group (relevant anchors)

4.1 Steel Strength

$V_{sa} = n\ 0.6\ A_{se,V}\ f_{uta}$ ACI 318-11 Eq. (D-29)

$\phi\ V_{steel} \geq V_{ua}$ ACI 318-11 Table D.4.1.1

Variables

n	$A_{se,V}$ [in.^{2}]	f_{uta} [psi]
1	0.61	58000

Calculations

V_{sa} [lb]
21089

Results

V_{sa} [lb]	ϕ_{steel}	$\phi\ V_{sa}$ [lb]	V_{ua} [lb]
21089	0.650	13708	1463

4.2 Pryout Strength

$V_{cpg} = k_{cp} \left[\left(\frac{A_{Nc}}{A_{Nc0}} \right) \psi_{ec,N}\ \psi_{ed,N}\ \psi_{c,N}\ \psi_{cp,N}\ N_b \right]$ ACI 318-11 Eq. (D-41)

$\phi\ V_{cpg} \geq V_{ua}$ ACI 318-11 Table D.4.1.1

A_{Nc} see ACI 318-11, Part D.5.2.1, Fig. RD.5.2.1(b)

$A_{Nc0} = 9\ h_{ef}^2$ ACI 318-11 Eq. (D-5)

$\psi_{ec,N} = \left(\frac{1}{1 + \frac{2\ e_N}{3\ h_{ef}}} \right) \leq 1.0$ ACI 318-11 Eq. (D-8)

$\psi_{ed,N} = 0.7 + 0.3 \left(\frac{c_{a,min}}{1.5 h_{ef}} \right) \leq 1.0$ ACI 318-11 Eq. (D-10)

$\psi_{cp,N} = \text{MAX} \left(\frac{c_{a,min}}{c_{ac}}, \frac{1.5 h_{ef}}{c_{ac}} \right) \leq 1.0$ ACI 318-11 Eq. (D-12)

$N_b = 16\ \lambda_a \sqrt{f'_c}\ h_{ef}^{5/3}$ ACI 318-11 Eq. (D-7)

Variables

k_{cp}	h_{ef} [in.]	$e_{c1,N}$ [in.]	$e_{c2,N}$ [in.]	$c_{a,min}$ [in.]
2	24.000	0.000	0.000	12.000

$\psi_{c,N}$	c_{ac} [in.]	k_c	λ_a	f'_c [psi]
1.000	-	16	1.000	4000

Calculations

A_{Nc} [in.^{2}]	A_{Nc0} [in.^{2}]	$\psi_{ec1,N}$	$\psi_{ec2,N}$	$\psi_{ed,N}$	$\psi_{cp,N}$	N_b [lb]
3952.00	5184.00	1.000	1.000	0.800	1.000	202070

Results

V_{cpg} [lb]	$\phi_{concrete}$	$\phi\ V_{cpg}$ [lb]	V_{ua} [lb]
246476	0.700	172533	5850

5 Combined tension and shear loads

β_N	β_V	ζ	Utilization $\beta_{N,V}$ [%]	Status
0.108	0.107	5/3	5	OK

$\beta_{NV} = \beta_N^\zeta + \beta_V^\zeta <= 1$

PROFIS Anchor (c) 2003-2009 Hilti AG, FL-9494 Schaan Hilti is a registered Trademark of Hilti AG, Schaan

Company: ARCADIS
Specifier: Matt Lotycz
Address:
Phone I Fax: |
E-Mail:

6 Warnings

- Load re-distributions on the anchors due to elastic deformations of the anchor plate are not considered. The anchor plate is assumed to be sufficiently stiff, in order not to be deformed when subjected to the loading!
- Condition A applies when supplementary reinforcement is used. The Φ factor is increased for non-steel Design Strengths except Pullout Strength and Pryout strength. Condition B applies when supplementary reinforcement is not used and for Pullout Strength and Pryout Strength. Refer to your local standard.
- Checking the transfer of loads into the base material and the shear resistance are required in accordance with ACI 318 or the relevant standard!

Fastening meets the design criteria!

PROFIS Anchor (c) 2003-2009 Hilti AG, FL-9494 Schaan Hilti is a registered Trademark of Hilti AG, Schaan

7 Installation data

Anchor plate, steel: -
Profile: W shape (AISC); 10.100 x 8.020 x 0.350 x 0.620 in.
Hole diameter in the fixture: d_f = 1.063 in.
Plate thickness (input): 0.500 in.
Recommended plate thickness: not calculated
Cleaning: No cleaning of the drilled hole is required

Anchor type and diameter: Heavy Hex Head ASTM F 1554 GR. 36 1
Installation torque: -0.009 in.lb
Hole diameter in the base material: - in.
Hole depth in the base material: 24.000 in.
Minimum thickness of the base material: 26.172 in.

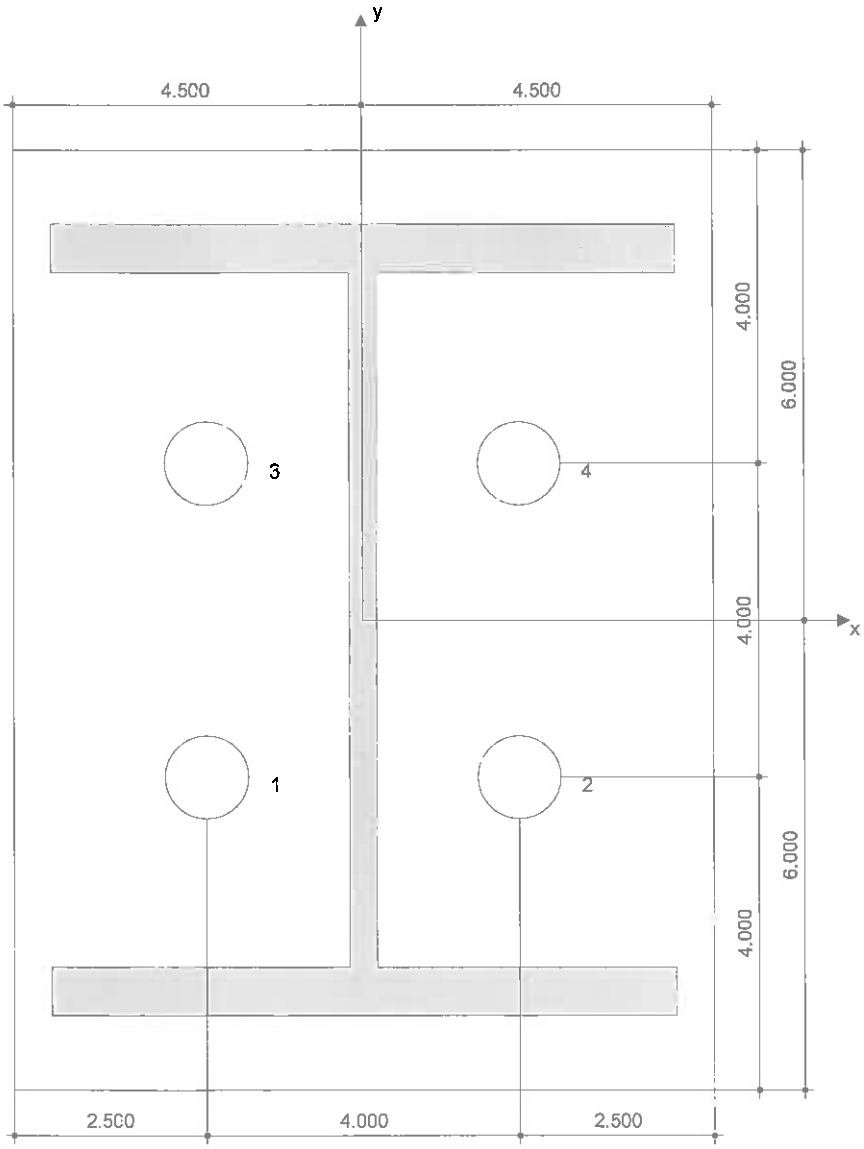

Coordinates Anchor in.

Anchor	x	y	c_{-x}	c_{+x}	c_{-y}	c_{+y}
1	-2.000	-2.000	-	-	-	16.000
2	2.000	-2.000	-	-	-	16.000
3	-2.000	2.000	-	-	-	12.000
4	2.000	2.000	-	-	-	12.000

PROFIS Anchor (c) 2003-2009 Hilti AG, FL-9494 Schaan Hilti is a registered Trademark of Hilti AG, Schaan

8 Remarks; Your Cooperation Duties

- Any and all information and data contained in the Software concern solely the use of Hilti products and are based on the principles, formulas and security regulations in accordance with Hilti's technical directions and operating, mounting and assembly instructions, etc., that must be strictly complied with by the user. All figures contained therein are average figures, and therefore use-specific tests are to be conducted prior to using the relevant Hilti product. The results of the calculations carried out by means of the Software are based essentially on the data you put in. Therefore, you bear the sole responsibility for the absence of errors, the completeness and the relevance of the data to be put in by you. Moreover, you bear sole responsibility for having the results of the calculation checked and cleared by an expert, particularly with regard to compliance with applicable norms and permits, prior to using them for your specific facility. The Software serves only as an aid to interpret norms and permits without any guarantee as to the absence of errors, the correctness and the relevance of the results or suitability for a specific application.
- You must take all necessary and reasonable steps to prevent or limit damage caused by the Software. In particular, you must arrange for the regular backup of programs and data and, if applicable, carry out the updates of the Software offered by Hilti on a regular basis. If you do not use the AutoUpdate function of the Software, you must ensure that you are using the current and thus up-to-date version of the Software in each case by carrying out manual updates via the Hilti Website. Hilti will not be liable for consequences, such as the recovery of lost or damaged data or programs, arising from a culpable breach of duty by you.

PROFIS Anchor (c) 2003-2009 Hilti AG, FL-9494 Schaan Hilti is a registered Trademark of Hilti AG, Schaan

I-18

Company:	ARCADIS	Page:	1
Specifier:	Matt Lotycz	Project:	Topok Workshop Bldg
Address:		Sub-Project I Pos. No.:	Interior Frame Column
Phone I Fax:		Date:	1/7/2015
E-Mail:			

Specifier's comments: Base Plate Anchorage - Worst Case Seismic Shear with 2.5 Overstrength

1 Input data

Anchor type and diameter:	**Heavy Hex Head ASTM F 1554 GR. 36 1**
Effective embedment depth:	h_{ef} = 24.000 in.
Material:	ASTM F 1554
Proof:	design method ACI 318-11 / CIP
Stand-off installation:	e_b = 0.000 in. (no stand-off); t = 0.500 in.
Anchor plate:	l_x x l_y x t = 9.000 in. x 12.000 in. x 0.500 in.; (Recommended plate thickness: not calculated)
Profile:	W shape (AISC); (L x W x T x FT) = 10.100 in. x 8.020 in. x 0.350 in. x 0.620 in.
Base material:	cracked concrete, 4000; f_c' = 4000 psi; h = 36.000 in.
Reinforcement:	tension: condition B; shear: condition B;
	edge reinforcement: > No. 4 bar
Seismic loads (cat. C, D, E, or F)	Tension load: yes (D.3.3.4.3 (a))
	Shear load: yes (D.3.3.5.3 (c))

LC#41

Geometry [in.] & Loading [lb, in.lb]

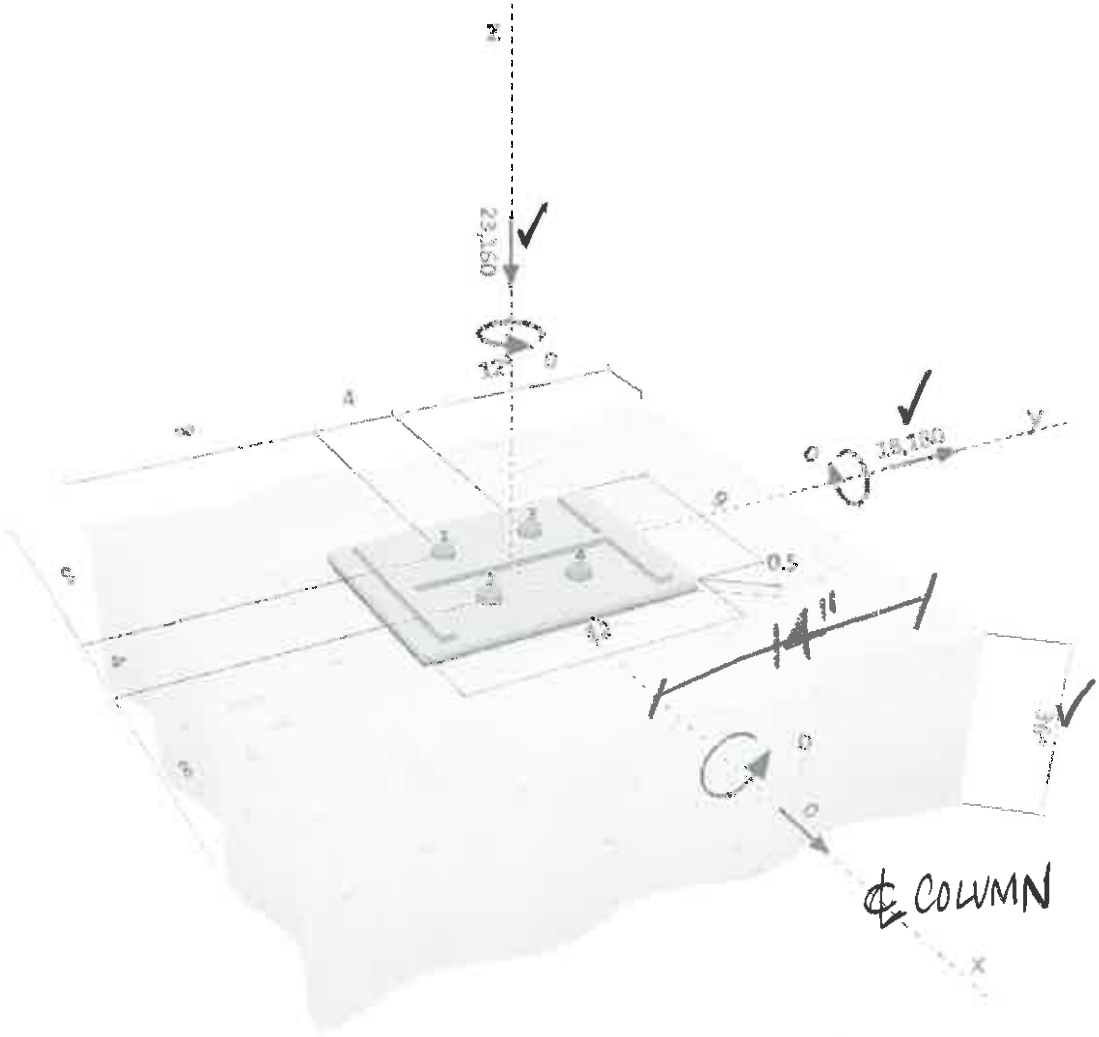

PROFIS Anchor (c) 2003-2009 Hilti AG, FL-9494 Schaan Hilti is a registered Trademark of Hilti AG, Schaan

Company: ARCADIS
Specifier: Matt Lotycz
Address:
Phone I Fax:
E-Mail:

2 Load case/Resulting anchor forces

Load case: Design loads

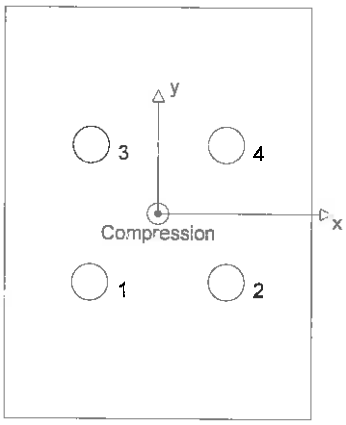

Anchor reactions [lb]
Tension force: (+Tension, -Compression)

Anchor	Tension force	Shear force	Shear force x	Shear force y
1	0	4545	0	4545
2	0	4545	0	4545
3	0	4545	0	4545
4	0	4545	0	4545

max. concrete compressive strain: 0.05 [‰]
max. concrete compressive stress: 214 [psi]
resulting tension force in (x/y)=(0.000/0.000): 0 [lb]
resulting compression force in (x/y)=(0.000/0.000): 23160 [lb]

3 Tension load

	Load N_{ua} [lb]	Capacity ϕN_n [lb]	Utilization $\beta_N = N_{ua}/\phi N_n$	Status
Steel Strength*	N/A	N/A	N/A	N/A
Pullout Strength*	N/A	N/A	N/A	N/A
Concrete Breakout Strength**	N/A	N/A	N/A	N/A
Concrete Side-Face Blowout, direction **	N/A	N/A	N/A	N/A

* anchor having the highest loading **anchor group (anchors in tension)

PROFIS Anchor (c) 2003-2009 Hilti AG, FL-9494 Schaan Hilti is a registered Trademark of Hilti AG, Schaan

4 Shear load

	Load V_{ua} [lb]	Capacity ϕV_n [lb]	Utilization $\beta_V = V_{ua}/\phi V_n$	Status
Steel Strength*	4545	13708	34	OK
Steel failure (with lever arm)*	N/A	N/A	N/A	N/A
Pryout Strength**	18180	172533	11	OK
Concrete edge failure in direction y+**	18180	22084	83	OK

* anchor having the highest loading **anchor group (relevant anchors)

4.1 Steel Strength

$V_{sa} = n\ 0.6\ A_{se,V}\ f_{uta}$ ACI 318-11 Eq. (D-29)

$\phi\ V_{steel} \geq V_{ua}$ ACI 318-11 Table D.4.1.1

Variables

n	$A_{se,V}$ [in.^{2}]	f_{uta} [psi]
1	0.61	58000

Calculations

V_{sa} [lb]
21089

Results

V_{sa} [lb]	ϕ_{steel}	$\phi\ V_{sa}$ [lb]	V_{ua} [lb]
21089	0.650	13708	4545

4.2 Pryout Strength

$V_{cpg} = k_{cp}\left[\left(\frac{A_{Nc}}{A_{Nc0}}\right)\psi_{ec,N}\,\psi_{ed,N}\,\psi_{c,N}\,\psi_{cp,N}\,N_b\right]$ ACI 318-11 Eq. (D-41)

$\phi\ V_{cpg} \geq V_{ua}$ ACI 318-11 Table D.4.1.1

A_{Nc} see ACI 318-11, Part D.5.2.1, Fig. RD.5.2.1(b)

$A_{Nc0} = 9\ h_{ef}^2$ ACI 318-11 Eq. (D-5)

$\psi_{ec,N} = \left(\frac{1}{1+\frac{2\ e_N}{3\ h_{ef}}}\right) \leq 1.0$ ACI 318-11 Eq. (D-8)

$\psi_{ed,N} = 0.7 + 0.3\left(\frac{c_{a,min}}{1.5h_{ef}}\right) \leq 1.0$ ACI 318-11 Eq. (D-10)

$\psi_{cp,N} = \text{MAX}\left(\frac{c_{a,min}}{c_{ac}}, \frac{1.5h_{ef}}{c_{ac}}\right) \leq 1.0$ ACI 318-11 Eq. (D-12)

$N_b = 16\ \lambda_a \sqrt{f'_c}\ h_{ef}^{5/3}$ ACI 318-11 Eq. (D-7)

Variables

k_{cp}	h_{ef} [in.]	$e_{c1,N}$ [in.]	$e_{c2,N}$ [in.]	$c_{a,min}$ [in.]
2	24.000	0.000	0.000	12.000

$\psi_{c,N}$	c_{ac} [in.]	k_c	λ_a	f'_c [psi]
1.000	-	16	1.000	4000

Calculations

A_{Nc} [in.^{2}]	A_{Nc0} [in.^{2}]	$\psi_{ec1,N}$	$\psi_{ec2,N}$	$\psi_{ed,N}$	$\psi_{cp,N}$	N_b [lb]
3952.00	5184.00	1.000	1.000	0.800	1.000	202070

Results

V_{cpg} [lb]	$\phi_{concrete}$	$\phi_{seismic}$	$\phi_{nonductile}$	$\phi\ V_{cpg}$ [lb]	V_{ua} [lb]
246476	0.700	1.000	1.000	172533	18180

PROFIS Anchor (c) 2003-2009 Hilti AG, FL-9494 Schaan Hilti is a registered Trademark of Hilti AG, Schaan

4.3 Concrete edge failure in direction y+

$V_{cbg} = \left(\frac{A_{Vc}}{A_{Vc0}}\right) \psi_{ec,V}\, \psi_{ed,V}\, \psi_{c,V}\, \psi_{h,V}\, \psi_{parallel,V}\, V_b$ — ACI 318-11 Eq. (D-31)

$\phi\, V_{cbg} \geq V_{ua}$ — ACI 318-11 Table D.4.1.1

A_{Vc} see ACI 318-11, Part D.6.2.1, Fig. RD.6.2.1(b)

$A_{Vc0} = 4.5\, c_{a1}^2$ — ACI 318-11 Eq. (D-32)

$\psi_{ec,V} = \left(\frac{1}{1 + \frac{2e_V'}{3c_{a1}}}\right) \leq 1.0$ — ACI 318-11 Eq. (D-36)

$\psi_{ed,V} = 0.7 + 0.3\left(\frac{c_{a2}}{1.5c_{a1}}\right) \leq 1.0$ — ACI 318-11 Eq. (D-38)

$\psi_{h,V} = \sqrt{\frac{1.5c_{a1}}{h_a}} \geq 1.0$ — ACI 318-11 Eq. (D-39)

$V_b = 9\, \lambda_a \sqrt{f_c'}\, c_{a1}^{1.5}$ — ACI 318-11 Eq. (D-34)

Variables

c_{a1} [in.]	c_{a2} [in.]	e_{cV} [in.]	$\psi_{c,V}$	h_a [in.]
12.000	-	0.000	1.200	36.000

l_e [in.]	λ_a	d_a [in.]	f_c' [psi]	$\psi_{parallel,V}$
8.000	1.000	1.000	4000	1.000

Calculations

A_{Vc} [in.^{2}]	A_{Vc0} [in.^{2}]	$\psi_{ec,V}$	$\psi_{ed,V}$	$\psi_{h,V}$	V_b [lb]
720.00	648.00	1.000	1.000	1.000	23662

Results

V_{cbg} [lb]	$\phi_{concrete}$	$\phi_{seismic}$	$\phi_{nonductile}$	$\phi\, V_{cbg}$ [lb]	V_{ua} [lb]
31549	0.700	1.000	1.000	22084	18180

5 Warnings

- Load re-distributions on the anchors due to elastic deformations of the anchor plate are not considered. The anchor plate is assumed to be sufficiently stiff, in order not to be deformed when subjected to the loading!
- Condition A applies when supplementary reinforcement is used. The Φ factor is increased for non-steel Design Strengths except Pullout Strength and Pryout strength. Condition B applies when supplementary reinforcement is not used and for Pullout Strength and Pryout Strength. Refer to your local standard.
- Checking the transfer of loads into the base material and the shear resistance are required in accordance with ACI 318 or the relevant standard!
- An anchor design approach for structures assigned to Seismic Design Category C, D, E or F is given in ACI 318-11 Appendix D, Part D.3.3.4.3 (a) that requires the governing design strength of an anchor or group of anchors be limited by ductile steel failure. If this is NOT the case, the connection design (tension) shall satisfy the provisions of Part D.3.3.4.3 (b), Part D.3.3.4.3 (c), or Part D.3.3.4.3 (d). The connection design (shear) shall satisfy the provisions of Part D.3.3.5.3 (a), Part D.3.3.5.3 (b), or Part D.3.3.5.3 (c).
- Part D.3.3.4.3 (b) / part D.3.3.5.3 (a) requires that the attachment the anchors are connecting to the structure be designed to undergo ductile yielding at a load level corresponding to anchor forces no greater than the controlling design strength. Part D.3.3.4.3 (c) / part D.3.3.5.3 (b) waives the ductility requirements and requires that the anchors shall be designed for the maximum tension / shear that can be transmitted to the anchors by a non-yielding attachment. Part D.3.3.4.3 (d) / part D.3.3.5.3 (c) waives the ductility requirements and requires the design strength of the anchors to equal or exceed the maximum tension / shear obtained from design load combinations that include E, with E increased by Ω_0.

Fastening meets the design criteria!

PROFIS Anchor (c) 2003-2009 Hilti AG, FL-9494 Schaan Hilti is a registered Trademark of Hilti AG, Schaan

Company: ARCADIS
Specifier: Matt Lotycz
Address:
Phone I Fax: |
E-Mail:

6 Installation data

Anchor plate, steel: -
Profile: W shape (AISC); 10.100 x 8.020 x 0.350 x 0.620 in.
Hole diameter in the fixture: d_f = 1.063 in.
Plate thickness (input): 0.500 in.
Recommended plate thickness: not calculated
Cleaning: No cleaning of the drilled hole is required

Anchor type and diameter: Heavy Hex Head ASTM F 1554 GR. 36 1
Installation torque: -0.009 in.lb
Hole diameter in the base material: - in.
Hole depth in the base material: 24.000 in.
Minimum thickness of the base material: 26.172 in.

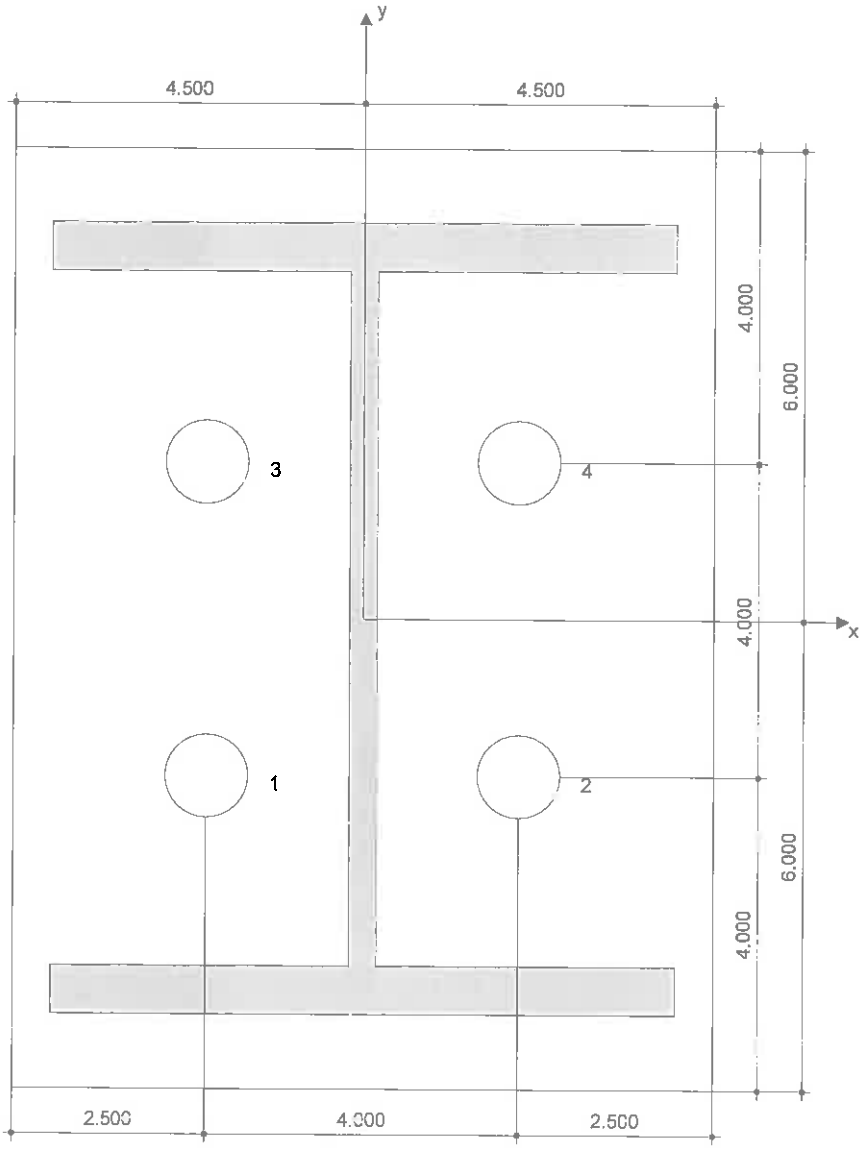

Coordinates Anchor in.

Anchor	x	y	c_{-x}	c_{+x}	c_{-y}	c_{+y}
1	-2.000	-2.000	-	-	-	16.000
2	2.000	-2.000	-	-	-	16.000
3	-2.000	2.000	-	-	-	12.000
4	2.000	2.000	-	-	-	12.000

PROFIS Anchor (c) 2003-2009 Hilti AG, FL-9494 Schaan Hilti is a registered Trademark of Hilti AG, Schaan

7 Remarks; Your Cooperation Duties

- Any and all information and data contained in the Software concern solely the use of Hilti products and are based on the principles, formulas and security regulations in accordance with Hilti's technical directions and operating, mounting and assembly instructions, etc., that must be strictly complied with by the user. All figures contained therein are average figures, and therefore use-specific tests are to be conducted prior to using the relevant Hilti product. The results of the calculations carried out by means of the Software are based essentially on the data you put in. Therefore, you bear the sole responsibility for the absence of errors, the completeness and the relevance of the data to be put in by you. Moreover, you bear sole responsibility for having the results of the calculation checked and cleared by an expert, particularly with regard to compliance with applicable norms and permits, prior to using them for your specific facility. The Software serves only as an aid to interpret norms and permits without any guarantee as to the absence of errors, the correctness and the relevance of the results or suitability for a specific application.
- You must take all necessary and reasonable steps to prevent or limit damage caused by the Software. In particular, you must arrange for the regular backup of programs and data and, if applicable, carry out the updates of the Software offered by Hilti on a regular basis. If you do not use the AutoUpdate function of the Software, you must ensure that you are using the current and thus up-to-date version of the Software in each case by carrying out manual updates via the Hilti Website. Hilti will not be liable for consequences, such as the recovery of lost or damaged data or programs, arising from a culpable breach of duty by you.

PROFIS Anchor (c) 2003-2009 Hilti AG, FL-9494 Schaan Hilti is a registered Trademark of Hilti AG, Schaan

ARCADIS

SUBJECT: TOPOK-WORKSHOP BLDG
SLAB-ON-GRADE

JOB NO:

BY: MSL DATE: 1/8/15

CHKD: DATE:

PAGE I-19

SHEET 1

SLAB-ON-GRADE DESIGN

- MODULUS OF SUBGRADE REACTION = 100 kcf ← CONSERVATIVE SINCE (kcf) LOOSE SAND 30-100, MEDIUM SAND 60-50, SAND W/SILT 150-3
- NET ALLOWABLE SOIL BEARING PRESSURE = 2,000 psf (GEOTECH REPORT)
- Refer to Sht I-20 thru I-25 FOR SLAB-ON-GRADE DESIGN

~I-20~ 3 TON FORKLIFT

~I-21~ HS-20 WHEEL LOAD – 32,000# AXLE → 16,000# WHEEL LOAD @ 100 kcf

~I-22~ " " " – 32,000# × 1.25 IMPACT = 40,000# AXLE

130 kcf @ 20,000# WHEEL LOAD

~I-23~ & I-24 WALL LOAD = $\left[\left(\frac{10.75^{ft}\ \%\ \text{OF WALLS}}{2}\right) \times (50\,psf_{LL} + 10\,psf_{DL})\right]$

$+ [10^{ft}\ \text{HIGH} \times 10\,psf]$

$= 423\#/ft \rightarrow$ USE $450\#/ft$

~I-25~ HS 20 WHEEL LOAD

↳ 32,000# AXLE × 1.25 IMPACT = 40,000# / 3.5 ft @ DISTRIBUTION (CONSERVATIVE)

= 11,429# IN 1 ft SLAB SECTION

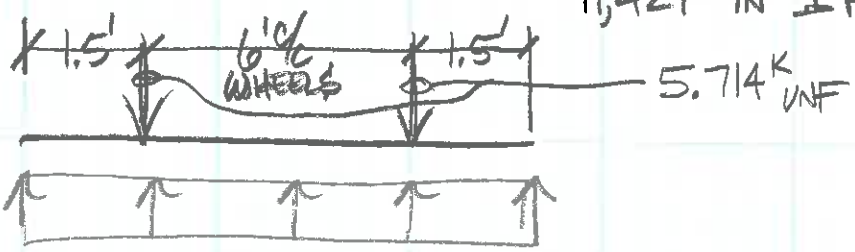

→ $M_{UNF} = 3.75^{K\cdot ft} \times 1.6_{ACI} = 6^{K\cdot ft}_{ACI}$

$V_{UNF} = 3.6^{K} \times 1.6_{ACI} = 5.76^{K}_{ACI}$ ← TOO CONSERVATIVE = 4.60K (3.6K/1.25 IMPACT) × 1.6 ACI

– 8" SOG w/ #6 @ 11" c/c CENTERED ~ $d = 8''/2 - 6/16'' = 3.62^{IN}$

4500 psi

- $\phi V_c = 2\phi\sqrt{f'_c}\,bd = 4.37^{K} \approx 4.6^{K}$ ✓OK B/C 3.5 ft @ SLAB DISTRIBUTION IS CONSERVATIVE
- $R = M_u/\phi bd^2 = 508.7 \rightarrow \rho = 0.0086 \rightarrow A_s = \rho bd = 0.37\ in^2/ft$

#6 @ 11" c/c CENTERED / $A_s = 0.48\ in^2/ft$ > ✓OK

AGM Form 30 12-01

"GRDSLAB.xls" Program
Version 1.6

CONCRETE SLAB ON GRADE ANALYSIS

For Slab Subjected to Interior Concentrated Post or Wheel Loading
Assuming ACI-360 "Type B" Design - Reinforced for Shrinkage and Temperature Only

Job Name:	Topok - Workshop Building	Subject:	Slab-on-Grade		
Job Number:	RC000753.0008	Originator:	MSL	Checker:	

3 TON FORKLIFT ≈ 6,000# x 1.25 = 7,500#

Input Data:

Slab Thickness, t =	8.000	in.
Concrete Strength, f 'c =	4000	psi
Conc. Unit Weight, wc =	150	pcf
Reinforcing Yield, fy =	60000	psi
Subgrade Modulus, k =	100	pci
Concentrated Load, P =	7750.00	lbs.
Contact Area, Ac =	72.00	in.^2
Factor of Safety, FS =	2.00	
Dowel Bar Dia., db =	0.750	in.
Dowel Bar Spacing, s =	11.000	in.
Const. Joint Width, z =	0.1250	in.
Joint Spacing, L =	15.000	ft.
Temperature Range, ΔT =	50.00	deg.
Increase for 2nd Wheel, i =	15	%

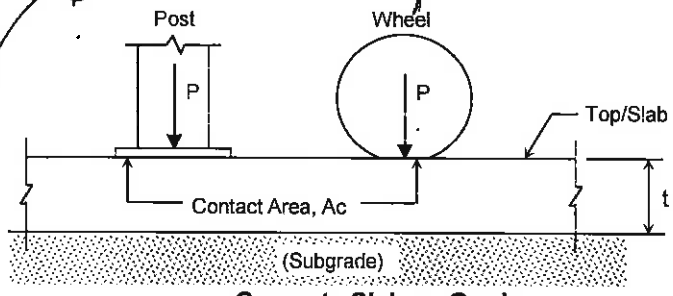

Concrete Slab on Grade

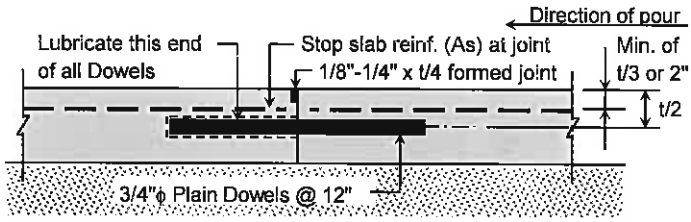

Typical Construction Joint for Load Transfer

Results:

Check Slab Flexural Stress: (assuming unreinforced slab with interior load condition)

Effective Load Radius, a =	4.787	in.	a = SQRT(Ac/π)
Modulus of Elasticity, Ec =	3834254	psi	Ec = 33*wc^1.5*SQRT(f 'c)
Modulus of Rupture, MR =	569.21	psi	MR = 9*SQRT(f 'c)
Cracking Moment, Mr =	6.07	ft-k/ft.	Mr = MR*(12*t^2/6)/12000 (per 1' = 12" width)
Poisson's Ratio, μ =	0.15		μ = 0.15 (assumed for concrete)
Radius of Stiffness, Lr =	35.968	in.	Lr = (Ec*t^3/(12*(1-μ^2)*k))^0.25
Equivalent Radius, b =	4.633	in.	b = SQRT(1.6*a^2+t^2)-0.675*t , for a < 1.724*t
1 Load: fb1(actual) =	177.21	psi	fb1(actual) = 3*P*(1+μ)/(2*π*t^2)*(LN(Lr/b)+0.6159) (Ref. 1)
2 Loads: fb2(actual) =	203.79	psi	fb2(actual) = fb1(actual)*(1+i/100)
Fb(allow) =	284.60	psi >	Fb(allow) = MR/FS **Fb(allow) >= fb(actual), O.K.** ✓

Check Slab Bearing Stress: (assuming working stress) (Ref. 4)

fp(actual) =	107.64	psi	fp(actual) = P/Ac
Fp(allow) =	2390.68	psi	Fp(allow) = 4.2*MR **Fp(allow) >= fp(actual), O.K.** ✓

Check Slab Punching Shear Stress: (assuming working stress) (Ref. 4)

bo =	33.941	in.	bo = 4*SQRT(Ac) (assumed shear perimeter)
fv(actual) =	14.69	psi	fv(actual) = P/(t*(bo+4*t))
Fv(allow) =	153.69	psi	Fv(allow) = 0.27*MR **Fv(allow) >= fv(actual), O.K.** ✓

Shrinkage and Temperature Reinf.: (assuming subgrade drag method) (Ref. 3)

Friction Factor, F =	1.50		F = 1.5 (assumed friction factor between subgrade and slab)
Slab Weight, W =	100.00	psf	W = wc*(t/12)
Reinf. Allow. Stress, fs =	45000	psi	fs = 0.75*fy
As =	0.025	in.^2/ft.	As = F*L*W/(2*fs)

(continued)

< #6@11"c/c (As = 0.48 in²/ft)

Determine Estimated Crack Width: (assuming no use of stabilized or granular subbase)

Slab-base Frict. Adjust., C =	1.00		C = 1.0 (assumed value for no subbase)
Thermal Expansion, α =	0.0000055	in./in./deg	α = 5.5x10^(-6) (assumed thermal expansion coefficient)
Shrinkage Coefficient, ε =	0.00035	in./in.	ε = 3.5x10^(-4) (assumed coefficient of shrinkage)
Est. Crack Width, ΔL =	0.1125	in.	ΔL = C*L*12*(α*ΔT+ε) (Ref. 5)

Check Bearing Stress on Dowels at Construction Joints with Load Transfer: (Ref. 2)

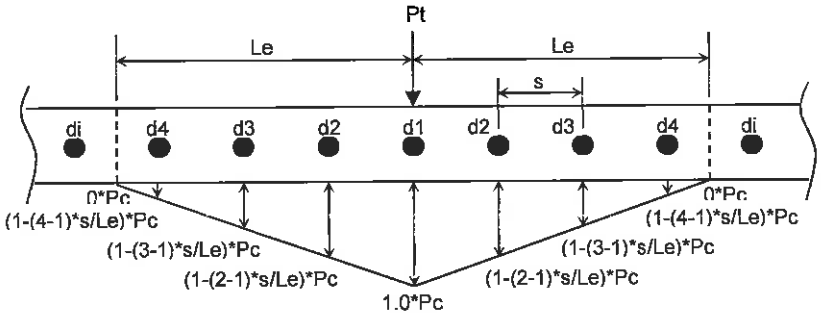

Assumed Load Transfer Distribution for Dowels at Construction Joint

Le =	35.968	in.	Le = 1.0*Lr = applicable dist. each side of critical dowel
Effective Dowels, Ne =	3.33	bars	Ne = 1.0+2*Σ(1-d(n-1)*s/Le) (where: n = dowel #)
Joint Load, Pt =	3875.00	lbs.	Pt = 0.50*P (assumed load transferred across joint)
Critical Dowel Load, Pc =	1163.65	lbs.	Pc = Pt/Ne
Mod. of Dowel Suppt., kc =	1500000	psi	kc = 1.5x10^6 (assumed for concrete)
Mod. of Elasticity, Eb =	29000000	psi	Eb = 29x10^6 (assumed for steel dowels)
Inertia/Dowel Bar, Ib =	0.0155	in.^4	Ib = π*db^4/64
Relative Bar Stiffness, β =	0.889		β = (kc*db/(4*Eb*Ib))^(1/4)
fd(actual) =	2911.67	psi	fd(actual) = kc*(Pc*(2+β*z)/(4*β^3*Eb*Ib))
Fd(allow) =	4333.33	psi	Fd(allow) = (4-db)/3*f 'c **Fd(allow) >= fd(actual), O.K.**

References:

1. "Load Testing of Instumented Pavement Sections - Improved Techniques for Appling the Finite Element Method to Strain Predition in PCC Pavement Structures" - by University of Minnesota, Department of Civil Engineering (submitted to MN/DOT, March 24, 2002)
2. "Dowel Bar Opimization: Phases I and II - Final Report" - by Max L. Porter (Iowa State University, 2001)
3. "Design of Slabs-on-Ground" - ACI 360R-06 - by American Concrete Institute (2006)
4. "Slab Thickness Design for Industrial Concrete Floors on Grade" (IS195.01D) - by Robert G. Packard (Portland Cement Association, 1976)
5. "Streses and Stains in Rigid Pavements" (Lecture Notes 3) - by Charles Nunoo, Ph.D., P.E. (Florida International University, Miami FL - Fall 2002)

Comments:

I-21

"GRDSLAB.xls" Program
Version 1.6

CONCRETE SLAB ON GRADE THICKNESS ANALYSIS

For Slab Subjected to Single Wheel Loading from Vehicles with Pneumatic Tires
Per PCA "Slab Thickness Design for Industrial Concrete Floors on Grade" - Figure 3, page 5

Job Name:	Topok - Workshop Building	Subject:	Slab-on-Grade		
Job Number:	RC000753.0008	Originator:	MSL	Checker:	

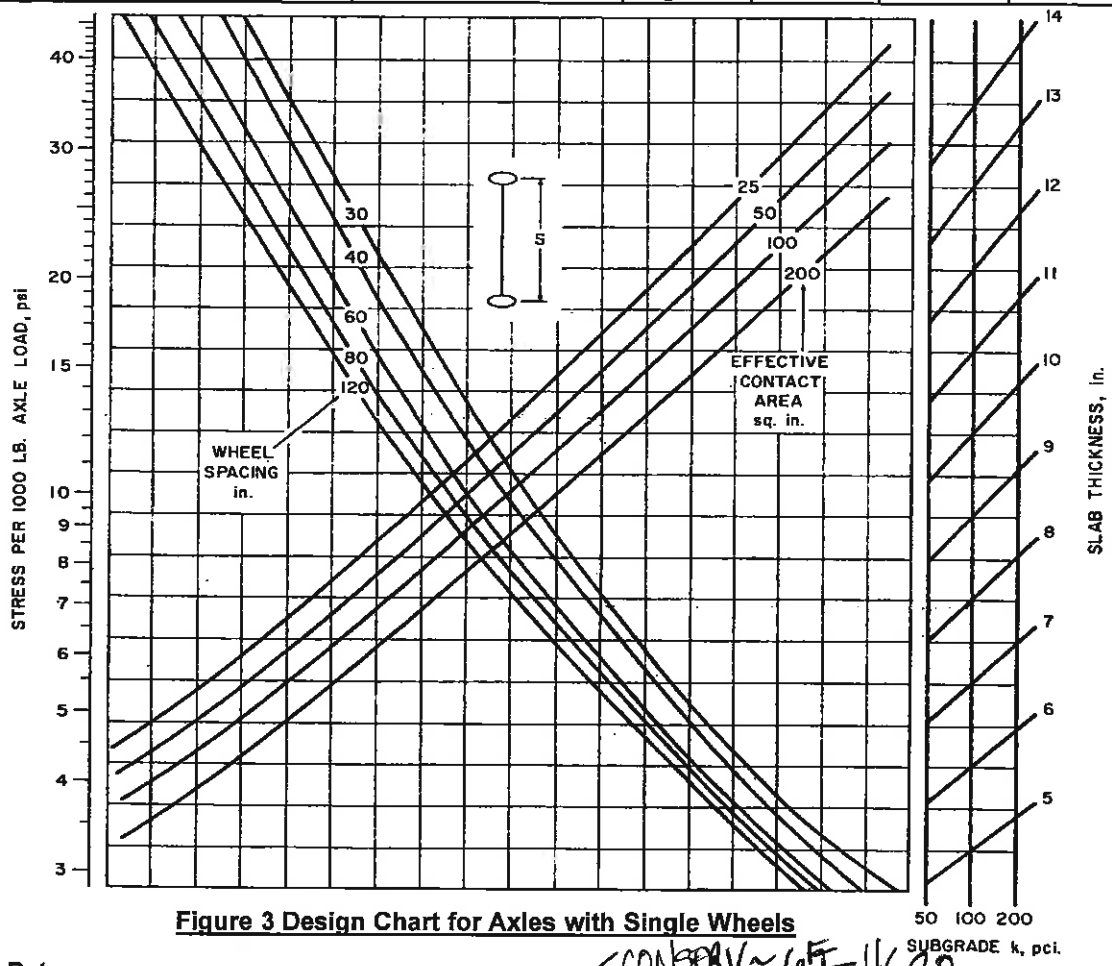

Figure 3 Design Chart for Axles with Single Wheels

CONSERV ~ 6FT - 1520

Input Data:

Concrete Strength, f 'c =	4000	psi
Subgrade Modulus, k =	100.00	pci
Axle Load, Pa =	32000.00	lbs.
Wheel Spacing, S =	37.00	in.
Tire Inflation Pressure, Ip =	110.00	psi
Factor of Safety, FS =	2.00	

Instructions for Use of Figure 3:

1. *Enter chart with slab stress = 8.89*
2. *Move to right to eff. contact area = 145.45*
3. *Move up/down to wheel spacing = 37*
4. *Move to right to subgrade modulus = 100*
5. *Read required slab thickness, t*

Results:

Wheel Load, Pw =	16000.00	lbs.	Pw = Pa/2 (1/2 of axle load for 2 wheels/axle)
Tire Contact Area, Ac =	145.45	in.^2	Ac = Pw/Ip
Effective Contact Area, Ac(eff) =	145.45	in.^2	Ac(eff) = determined from Figure 5, page 6
Concrete Flexual Strength, MR =	569.21	psi	MR = 9*SQRT(f 'c) (Modulus of Rupture)
Concrete Working Stress, WS =	284.60	psi	WS = MR/FS
Slab Stress/1000 lb. Axle Load =	8.89	psi	Ss = WS/(Pa/1000)
Slab Thickness, t =	7.900	in. < 8 IN	t = determined from Figure 3 above

√OK

1/8/2015 8:52 AM

I-22

"GRDSLAB.xls" Program
Version 1.6

CONCRETE SLAB ON GRADE THICKNESS ANALYSIS

For Slab Subjected to Single Wheel Loading from Vehicles with Pneumatic Tires
Per PCA "Slab Thickness Design for Industrial Concrete Floors on Grade" - Figure 3, page 5

Job Name:	Topok - Workshop Building	Subject:	Slab-on-Grade		
Job Number:	RC000753.0008	Originator:	MSL	Checker:	

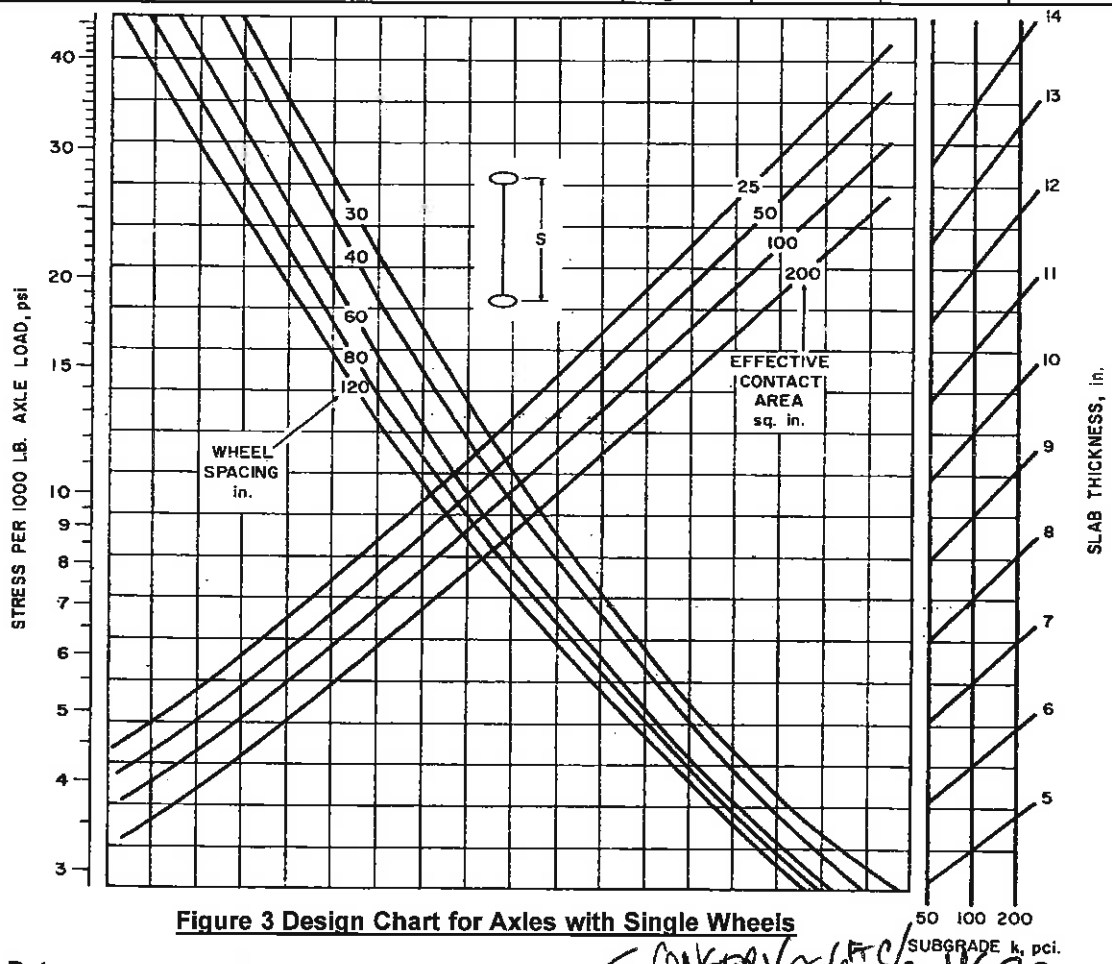

Figure 3 Design Chart for Axles with Single Wheels

CONSERV ~ 6FT C/C HS20

Input Data:

Concrete Strength, f 'c =	4000	psi
Subgrade Modulus, k =	130.00	pci
Axle Load, Pa =	40000.00	lbs.
Wheel Spacing, S =	37.00	in.
Tire Inflation Pressure, Ip =	110.00	psi
Factor of Safety, FS =	2.00	

Instructions for Use of Figure 3:

1. *Enter chart with slab stress = 7.12*
2. *Move to right to eff. contact area = 181.82*
3. *Move up/down to wheel spacing = 37*
4. *Move to right to subgrade modulus = 130*
5. *Read required slab thickness, t*

Results:

Wheel Load, Pw =	20000.00	lbs.	Pw = Pa/2 (1/2 of axle load for 2 wheels/axle)
Tire Contact Area, Ac =	181.82	in.^2	Ac = Pw/Ip
Effective Contact Area, Ac(eff) =	181.82	in.^2	Ac(eff) = determined from Figure 5, page 6
Concrete Flexual Strength, MR =	569.21	psi	MR = 9*SQRT(f 'c) (Modulus of Rupture)
Concrete Working Stress, WS =	284.60	psi	WS = MR/FS
Slab Stress/1000 lb. Axle Load =	7.12	psi	Ss = WS/(Pa/1000)
Slab Thickness, t =	7.900	in. < 8IN	t = determined from Figure 3 above

OK

1/8/2015 8:51 AM

"GRDSLAB.xls" Program
Version 1.6

CONCRETE SLAB ON GRADE ANALYSIS

For Slab Subjected to Continuous Line Loading from Wall

Job Name:	Topok - Workshop Building	Subject:	Slab-on-Grade		
Job Number:	RC000753.0008	Originator:	MSL	Checker:	

Input Data:

Slab Thickness, t =	8.000	in.
Concrete Strength, f 'c =	4000	psi
Subgrade Modulus, k =	100	pci
Wall Load, P =	450.00	lb./ft.

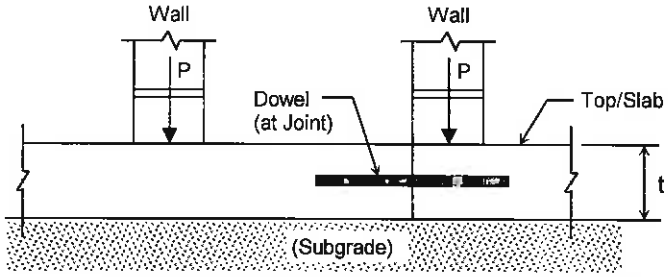

Concrete Slab Loaded Near Center or at Joint

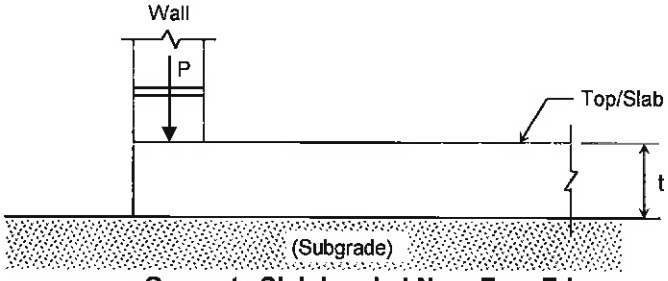

Concrete Slab Loaded Near Free Edge

Results:

Design Parameters:

Modulus of Rupture, MR =	569.21	psi	MR = 9*SQRT(f 'c)
Allow. Bending Stress, Fb =	101.19	psi	Fb = 1.6*SQRT(f 'c) (as recommended in reference below)
Factor of Safety, FS =	5.625		FS = MR/Fb
Section Modulus, S =	128.00	in.^3/ft.	S = b*t^2/6
Modulus of Elasticity, Ec =	3604997	psi	Ec = 57000*SQRT(f 'c)
Width, b =	12.00	in.	b = 12" (assumed)
Moment of Inertia, I =	512.00	in.^4	I = b*t^3/12
Stiffness Factor, λ =	0.0201		λ = (k*b/(4*Ec*I))^(0.25)
Coefficient, Bλx =	0.3224		Bλx = coefficient from "*Beams on Elastic Foundations*" by M. Hetenyi

Wall Load Near Center of Slab or Keyed/Doweled Joints:

Allowable Wall Load, Pc = 1040.30 lb./ft.

Pc = 4*Fb*S*λ
= 12.8*SQRT(f 'c)*t^2*(k/(19000*SQRT(f 'c)*t^3))^(0.25)

Pc(allow) >= P, O.K. ✓

Wall Load Near Free Edge of Slab:

Allowable Wall Load, Pe = 806.68 lb./ft.

Pe = Fb*S*λ/Bλx
= 9.9256*SQRT(f 'c)*t^2*(k/(19000*SQRT(f 'c)*t^3))^(0.25)

Pe(allow) >= P, O.K. ✓

Reference:

"Concrete Floor Slabs on Grade Subjected to Heavy Loads"
Army Technical Manual TM 5-809-12, Air Force Manual AFM 88-3, Chapter 15 (1987)

Comments:

"GRDSLAB.xls" Program
Version 1.6

CONCRETE SLAB ON GRADE ANALYSIS

For Slab Subjected to Stationary Uniformly Distributed Live Loads

Job Name:	Topok - Workshop Building	Subject:	Slab-on-Grade		
Job Number:	RC000753.0008	Originator:	MSL	Checker:	

Input Data:

Slab Thickness, t =	8.000	in.
Concrete Strength, f 'c =	4000	psi
Subgrade Modulus, k =	100	pci
Factor of Safety, FS =	2.000	
Uniform Live Load, wLL =	450.00	psf

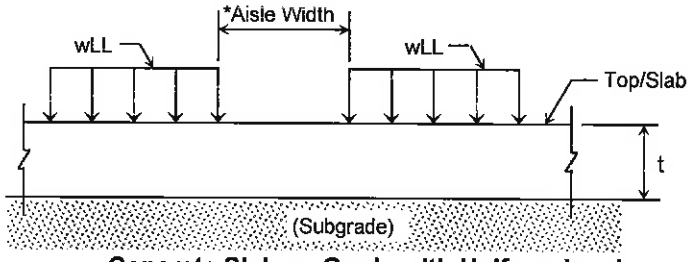

Concrete Slab on Grade with Uniform Loads

*Note: In an unjointed aisleway between uniformly distributed load areas, negative bending moment in slab may be up to twice as great as positive moment in slab beneath loaded area. Allowable uniform load determined below is based on critical aisle width and as a result, there are no restrictions on load layout configuration or uniformity of loading.

Results:

Design Parameters:

Modulus of Rupture, MR =	569.21	psi	MR = 9*SQRT(f 'c)
Allow. Bending Stress, Fb =	284.60	psi	Fb = MR/FS
Modulus of Elasticity, Ec =	3604997		Ec = 57000*SQRT(f 'c)
Poisson's Ratio, μ =	0.15		μ = 0.15 (assumed for concrete)
Radius of Stiffness, Lr =	35.42	in.	Lr = (Ec*t^3/(12*(1-μ^2)*k))^0.25
Critical Aisle Width, Wcr =	6.52	ft.	Wcr = (2.209*Lr)/12 (Ref. 3, Appendix 2 page 64) (presented for information only)

Stationary Uniformly Distributed Live Loads:

Per Ref. #1: wLL(allow) = 1093.32 psf — wLL(allow) = 257.876*Fb*SQRT(k*t/Ec)

wLL(allow) >= wLL, O.K. ✓

Per Ref. #2: wLL(allow) = 990.13 psf — wLL(allow) = 0.123*Fb*SQRT(k*t)

wLL(allow) >= wLL, O.K. ✓

Reference:

1. "Concrete Floor Slabs on Grade Subjected to Heavy Loads"
   Army Technical Manual TM 5-809-12, Air Force Manual AFM 88-3, Chapter 15 (1987)
2. "Slab Thickness Design for Industrial Concrete Floors on Grade" (IS195.01D)
   by Robert G. Packard (Portland Cement Association, 1976)
3. "Design of Slabs-on-Ground" - ACI 360R-06 - by American Concrete Institute

Comments:

"BOEF.xls" Program
Version 1.4

BEAM ON ELASTIC FOUNDATION ANALYSIS

For Soil Supported Beam, Combined Footing, Slab Strip or Mat Strip of Assumed Finite Length with Both Ends Free

Job Name:	Topok - Workshop Building	Subject:	Slab-on-Grade		
Job Number:	RC000753.0008	Originator:	MSL	Checker:	

Input Data:

Beam Data:

Length, L =	9.0000	ft.
Width, B =	1.0000	ft.
Thickness, T =	0.6667	ft.
Modulus, E =	3600	ksi
Subgrade, K =	100	pci

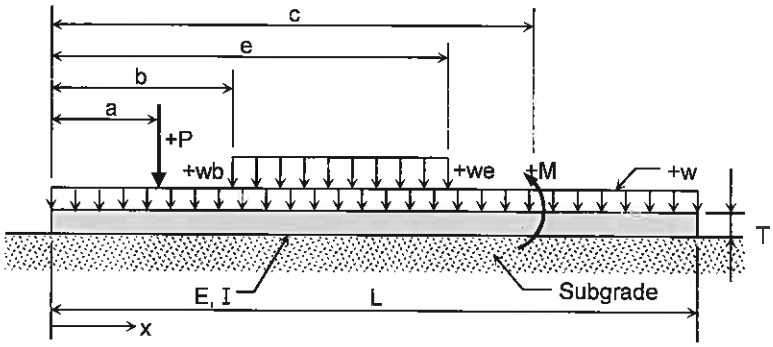

Nomenclature

Beam Loadings:

Full Uniform:

w = 0.1000 kips/ft.

Distributed:	Start b (ft.)	Start Wb (kips/ft.)	End e (ft.)	End We (kips/ft.)
#1:				
#2:				
#3:				
#4:				
#5:				
#6:				

Point Loads:	a (ft.)	P (kips)
#1:	1.5000	5.71
#2:	7.5000	5.71
#3:		
#4:		
#5:		
#6:		
#7:		
#8:		
#9:		
#10:		
#11:		
#12:		

Moments:	c (ft.)	M (ft-kips)
#1:		
#2:		
#3:		
#4:		

Results:

Beam Flexiblity Criteria:

for $\beta^*L <= \pi/4$	beam is rigid
for $\pi/4 < \beta^*L < \pi$	beam is semi-rigid
for $\beta^*L >= \pi$	beam is flexible
for $\beta^*L >= 6$	beam is semi-infinite long

Inertia, I =	0.0247	ft.^4	I = B*T^3/12
β =	0.241		β = ((K*B)/(4*E*I))^(1/4)
β*L =	2.169		β*L = Flexibility Factor

Beam is semi-rigid

Max. Shears and Locations:

+V(max) =	3.64	k	@ x =	7.50	ft.
-V(max) =	-3.64	k	@ x =	1.50	ft.

Max. Moments and Locations:

+M(max) =	1.57	ft-k	@ x =	1.50	ft.
-M(max) =	-3.75	ft-k	@ x =	4.50	ft.

Max. Deflection and Location:

Δ(max) =	-0.107	in.	@ x =	0.00	ft.

Max. Soil Pressure and Location:

Q(max) =	1.534	ksf	@ x =	0.00	ft.

Comments:

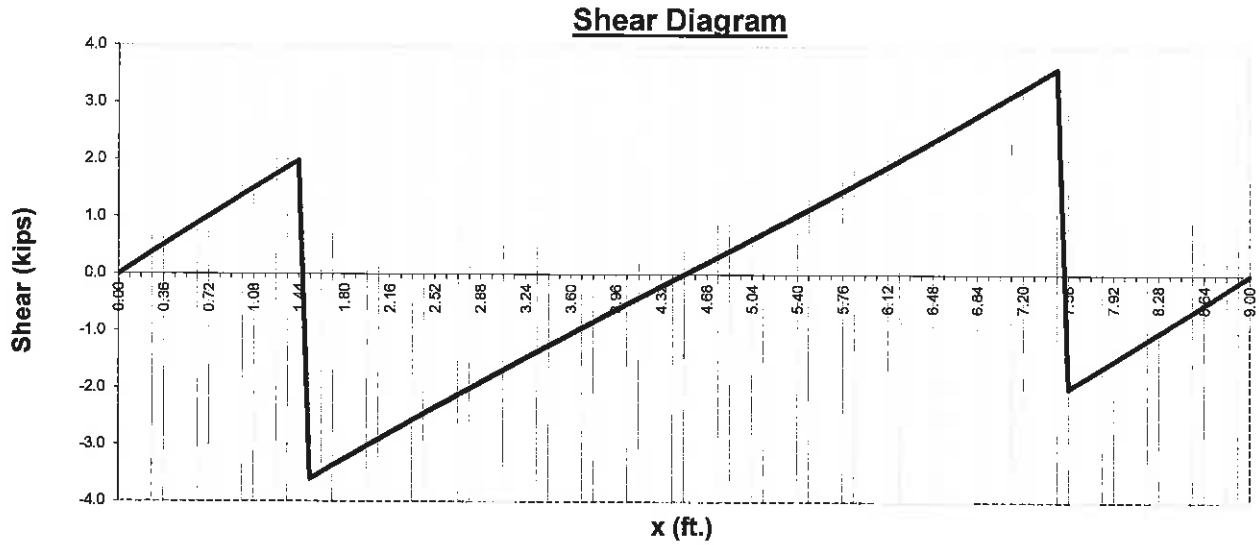
Shear Diagram
Shear (kips)
4.0
3.0
2.0
1.0
0.0
-1.0
-2.0
-3.0
-4.0
0.00
0.36
0.72
1.08
1.44
1.80
2.16
2.52
2.88
3.24
3.60
3.96
4.32
4.68
5.04
5.40
5.76
6.12
6.48
6.84
7.20
7.56
7.92
8.28
8.64
9.00
x (ft.)

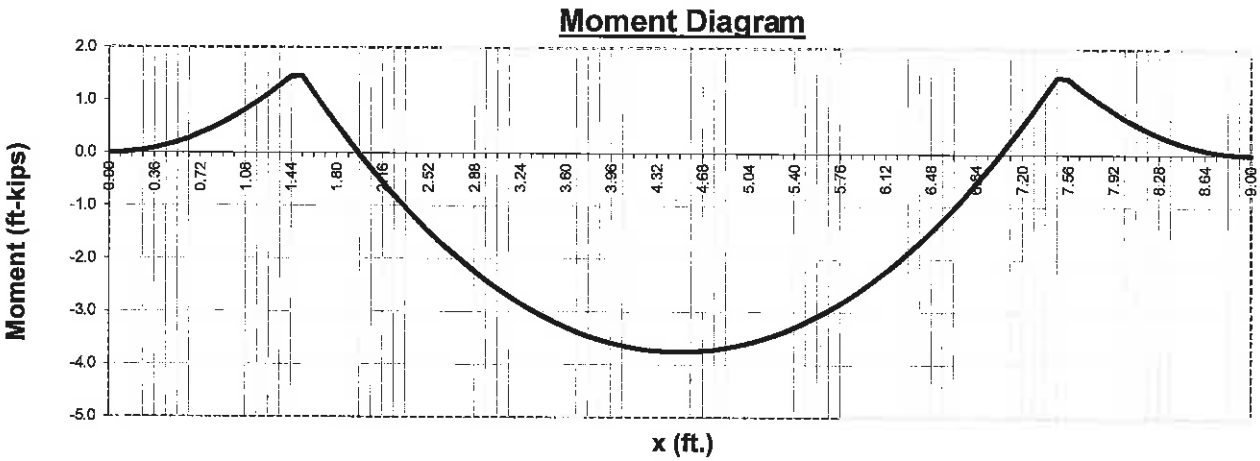
Moment Diagram
Moment (ft-kips)
2.0
1.0
0.0
-1.0
-2.0
-3.0
-4.0
-5.0
0.00
0.36
0.72
1.08
1.44
1.80
2.16
2.52
2.88
3.24
3.60
3.96
4.32
4.68
5.04
5.40
5.76
6.12
6.48
6.84
7.20
7.56
7.92
8.28
8.64
9.00
x (ft.)

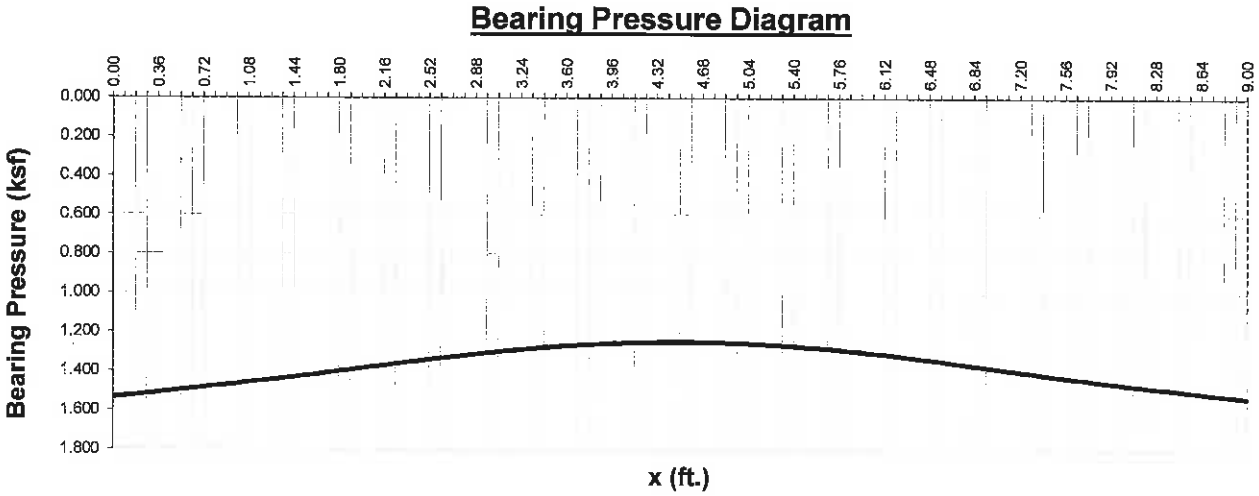
Bearing Pressure Diagram
Bearing Pressure (ksf)
0.000
0.200
0.400
0.600
0.800
1.000
1.200
1.400
1.600
1.800
0.00
0.36
0.72
1.08
1.44
1.80
2.16
2.52
2.88
3.24
3.60
3.96
4.32
4.68
5.04
5.40
5.76
6.12
6.48
6.84
7.20
7.56
7.92
8.28
8.64
9.00
x (ft.)

ARCADIS

SUBJECT: TOPOK-WORKSHOP BLDG
STAIR DESIGN

JOB NO:

BY: MSL DATE: 1/8/15

CHKD: DATE:

PAGE I-26

SHEET 1

STAIR DESIGN

- LIVE LOAD = 100 psf (BASIS OF DESIGN)
- REF SHT I-27 FOR STAIR PLAN LAYOUT
- GRATING DESIGN
  - STAIR ~ 3'-0" IN/IN STRINGERS
  - OHIO GRATING (SHT I-28) ~ 19-W-4 ~ LIGHT-DUTY WELDED STEEL BAR GRATING

3/4" x 3/16 →
- 306 psf > 300 psf UNIFORM ✓OK
- 402# ≈ 450# CONC ✓OK

~ USE 1" x 3/16" LIGHT DUTY WELDED STEEL BAR GRATING (19-W-4) W/ SERRATED TOP SURFACE

- STAIR STRINGER DESIGN
  - LOAD = (7.04 psf GRATING DL + 100 psf LL) x (3 FT IN/IN / 2)
    = 160.6 #/FT + 20 #/FT STRINGER DEAD LOAD + 10 #/FT RAILING DL
    = 191 #/FT
  - SPAN = 15'-7" + 3'-6" = 19.08 FT
  - $M_{UNF} = \frac{wl^2}{8} = 8.69^{KIFT}$ (STRONG AXIS)
  - $V_{UNF} = \frac{wl}{2} = 1.82^{K}$

(41 #/FT DL) x (1 + 0.14 S_{DS}) x C_S = 0.07
= 2.97 #/FT
= MIN 16 psf INTERIOR ULTIMATE WIND x 0.6
= 10 psf x (10" + 3")

WEAK AXIS 11 #/FT
- $M_{UNF} = \frac{wl^2}{8} = 0.50^{KIFT}$
- $V_{UNF} = \frac{wl}{2} = 105^{\#}$

I-27

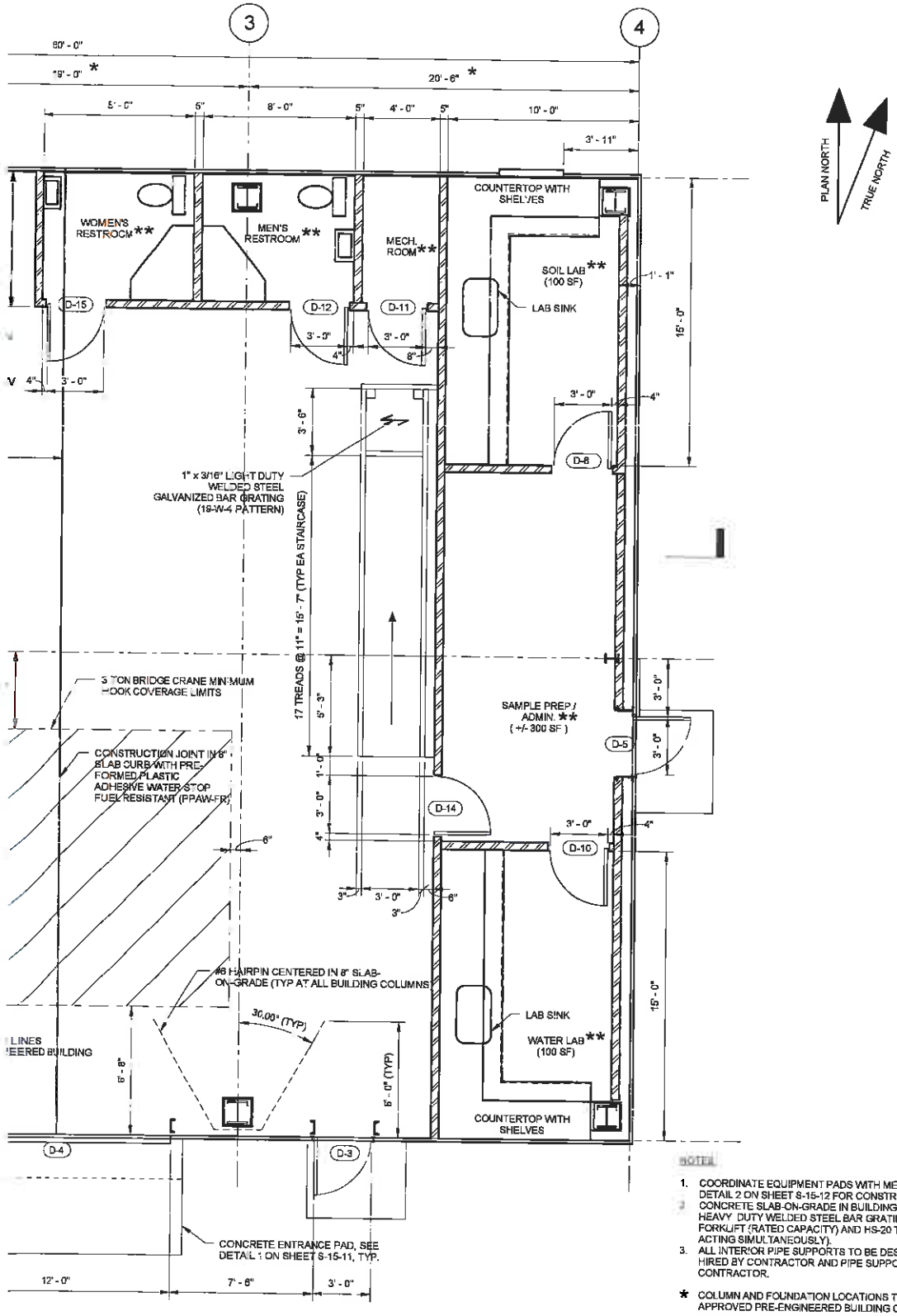

SH FLOOR PLAN
= 1'-0"

NOTES

1. COORDINATE EQUIPMENT PADS WITH MECHANICAL DRAWINGS. SEE DETAIL 2 ON SHEET S-15-12 FOR CONSTRUCTION REQUIREMENTS.
2. CONCRETE SLAB-ON-GRADE IN BUILDING, CONCRETE RAMPS, AND HEAVY DUTY WELDED STEEL BAR GRATING IS DESIGNED FOR 3 TON FORKLIFT (RATED CAPACITY) AND HS-20 TRAFFIC LOADS (LOADS NOT ACTING SIMULTANEOUSLY).
3. ALL INTERIOR PIPE SUPPORTS TO BE DESIGNED BY CALIFORNIA P.E. HIRED BY CONTRACTOR AND PIPE SUPPORTS TO BE PORVIDED BY CONTRACTOR.

* COLUMN AND FOUNDATION LOCATIONS TO BE VERIFIED PER APPROVED PRE-ENGINEERED BUILDING COLUMN LOCATIONS.

** 1/2" PLYWOOD SHEATHING FASTENED TO TOP OF METAL ROOF DECK (1.5B DECK 22 GA) w/ 6" METAL STUD JOISTS AT 16" C/C (TYP ALL INTERIOR ROOMS) (MAX LIVE LOAD RATING = 50 PSF)

- DRAFT -
NOT FOR CONSTRUCTION

No.	Date	DESCRIPTION	GM/SPEC	DWN	CHKD	SUPV	APVD BY
0	12/30/14	SUPPLEMENTAL PRE-FINAL (90%) DESIGN SUBMITTAL	CMW	MSL	JB	RAK	

REVISIONS

APPROVED BY: SO
SUPV: JB
DSGN: MSL
DWN: CMW
CHKD: MSL
GM: RAK
DATE: 12/30/14
SCALES: NONE or AS SHOWN

TOPOCK GROUNDWATER REMEDIATION PROJECT

WORKSHOP BUILDING FINISH FLOOR PLAN

GAS TRANSMISSION & DISTRIBUTION
PACIFIC GAS AND ELECTRIC COMPANY
SAN FRANCISCO, CALIFORNIA

MICROFILM
BILL OF MATL
DWG LIST
SUPSDS
SUPSD BY
SHEET NO. of SHEETS
S-15-06
REV

I-28

OHIO GRATINGS, INC.

Architectural & Industrial Metal Grating Solutions

Light Duty Steel Grating Resources & Links

Light Duty Dove Tail Steel

Light Duty Riveted Steel

Light Duty Swaged Steel

Grating Data

Benefits of Light Duty Steel

Light Duty Steel Design Criteria

Steel Grating Frames

Grating Ordering Information

Distributor Locator

Request A Quote

PDF's

Product Catalog

LIGHT DUTY STEEL GRATING

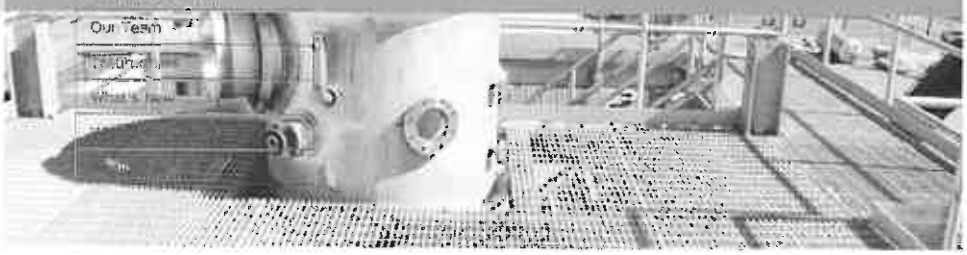

W Series

ADA compliant light duty steel grating is the workhorse of the industrial flooring market and is used for many different types of pedestrian (walking) applications. The open grid construction provides maximum passage for light, air circulation and drainage. Electro-forging, a machine process combining hydraulic pressure and heat fusion, is readily available and an economical method for manufacturing steel grating panels. The bearing bar surface can be ordered smooth or with a serrated surface for maximum skid resistance. Also available in Stainless Steel, type 304 or 316, upon request. ***Serrated surfaces also available.***

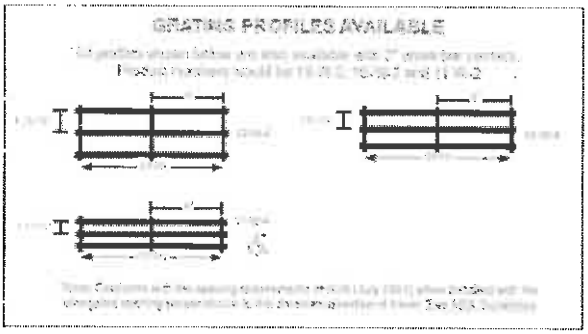

3-Part Specifications

- 19-W-4
- 15-W-4
- 11-W-4

Load Tables

- 19 Space
- 15 Space
- 11 Space

YouTube Video

- Light Duty Welded Steel

Applications for this product include:

- Bridge Walkway Areas
- Vault Covers
- Machinery Safety Guards
- Access to Public/Government Buildings
- Sidewalk Grates
- Stair Treads
- Stage Flooring
- Tree & Pole Guards
- Machine & Motor Bases
- Entranceways to Buildings
- Commercial Entranceways
- Trench Grating

Copyright© 2011 Ohio Gratings Inc.
All Rights Reserved.

info@ohiogratings.com • P: 800-321-9300 • F: 330-477-7872 • 5299 Southway St. SW, Canton Ohio 44706
Programmed & Maintained by OGI Business Applications Development

2'-8" CLEAR — L2X2 STAIR TREAD SUPPORTS!

SERRATED

USE

Bar Size, Inches	Bar Spacing, Inches	Wt. Lbs. Sq. Ft.	Sq. Prop. Sq. In. Sq. In.		Clear Span 2'-0"	2'-6"	3'-0"	3'-6"	4'-0"	4'-6"	5'-0"	5'-6"	6'-0"	6'-6"	7'-0"	7'-6"
3/4 x 3/16	48	5.43	3.170	U	972	541	312	174	99							
				D	0.000	0.166	0.224	0.268	0.300							
			3.097	C	931	518	299	167	96							
				D	0.075	0.124	0.170	0.215	0.261							
1 x 1/8	51	4.69	0.211	U	5,327	2,963	1,711	956	544	314						
				D	0.000	0.112	0.160	0.208	0.256	0.304						
			0.195	C	4,922	2,737	1,581	883	502	291						
				D	0.000	0.093	0.134	0.183	0.229	0.275						
1 x 3/16	57	7.04	0.316	U	8,142	4,526	2,614	1,461	831	481	282					
				D	0.000	0.116	0.166	0.224	0.278	0.331	0.382					
			0.196	C	7,457	4,146	2,394	1,338	761	440	258					
				D	0.000	0.093	0.134	0.180	0.224	0.267	0.307					
1-1/4 x 1/8	61	5.85	0.328	U	9,967	5,541	3,200	1,788	1,017	589	345	130				
				D	0.000	0.083	0.124	0.167	0.209	0.251	0.293	0.346				
			0.206	C	9,167	5,095	2,942	1,644	935	542	317	192				
				D	0.049	0.074	0.107	0.145	0.181	0.218	0.258	0.301				
1-1/4 x 3/16	67	8.54	0.493	U	12,451	6,917	3,993	2,231	1,270	732	431	192	104			
				D	0.000	0.000	0.124	0.162	0.208	0.251	0.293	0.337	0.376			
			0.306	C	11,450	6,362	3,672	2,091	1,190	677	398	236	143			
				D	0.049	0.074	0.107	0.145	0.181	0.218	0.258	0.301	0.341			
1-1/2 x 1/8	76	7.04	0.474	U	14,431	8,018	4,628	2,634	1,497	851	484	276	156			
				D	0.000	0.078	0.112	0.150	0.188	0.226	0.263	0.300	0.338			
			0.355	C	13,221	7,347	4,241	2,413	1,372	781	444	253	144			
				D	0.049	0.069	0.099	0.132	0.167	0.201	0.238	0.281	0.320			
1-1/2 x 3/16	77	10.25	0.711	U	21,172	11,764	6,791	3,866	2,200	1,252	712	405	232			
				D	0.000	0.078	0.112	0.150	0.188	0.225	0.263	0.300	0.338	0.375		
			0.532	C	19,132	10,631	6,139	3,494	1,988	1,131	643	366	208	119		
				D	0.049	0.069	0.099	0.132	0.167	0.201	0.238	0.281	0.320	0.358		
1-3/4 x 3/16	87	11.97	0.967	U	28,811	16,007	9,236	5,257	2,991	1,702	968	551	314	179	102	
				D	0.000	0.067	0.096	0.132	0.167	0.201	0.236	0.272	0.307	0.342	0.377	
			0.848	C	26,011	14,451	8,340	4,746	2,701	1,537	875	498	283	161	92	
				D	0.049	0.063	0.091	0.124	0.157	0.191	0.224	0.257	0.291	0.324	0.357	
2 x 3/16	95	13.49	1.260	U	37,598	20,887	12,054	6,859	3,904	2,222	1,264	719	409	233	133	76
				D	0.000	0.058	0.084	0.114	0.145	0.169	0.201	0.230	0.256	0.284	0.309	0.338
			1.232	C	33,938	18,857	10,880	6,191	3,523	2,005	1,141	649	369	210	120	68
				D	0.030	0.047	0.067	0.091	0.113	0.141	0.168	0.195	0.225	0.255	0.285	0.317
2-1/4 x 3/16	105	15.05	1.598	U	47,798	26,559	15,322	8,719	4,962	2,824	1,607	914	520	296	169	96
				D	0.000	0.052	0.074	0.101	0.132	0.156	0.187	0.207	0.230	0.254	0.280	0.308
			1.738	C	43,104	23,947	13,817	7,861	4,474	2,546	1,448	824	469	267	152	86
				D	0.026	0.041	0.060	0.081	0.105	0.134	0.165	0.200	0.239	0.280	0.324	0.371
2-1/2 x 3/16	113	16.30	1.974	U	58,271	32,373	18,675	10,627	6,047	3,441	1,958	1,114	634	361	205	117
				D	0.000	0.047	0.067	0.091	0.119	0.151	0.186	0.225	0.268	0.315	0.365	0.417
			2.492	C	52,521	29,177	16,832	9,577	5,450	3,102	1,765	1,004	572	325	185	105
				D	0.024	0.037	0.054	0.073	0.095	0.121	0.149	0.180	0.215	0.252	0.292	0.334

*Based on 10.195 bearing of grating width. Bearing bars 1-3/16" o.c. Area of Bearing Bars for 19-SGCS-4. Note: Grating for spans to the left of the heavy line have a deflection less than 1/4" for uniform loads of 100 lbs./sq. ft. This is the maximum deflection to avoid pedestrian comfort, and can be exceeded for other loads or use at the discretion of the engineer. The actual Pedestrian Span under this condition is shown above for each size of grating. When serrated grating is specified, the depth of grating required for a specific load will be 1/8" greater than that shown in these tables. 3/4" x 3/16" serrated grating is not available.

Panel Width Chart (in.) - 19-W-4, 19-W-2, 19-DT-4, 19-DT-2, 19-SGCS-4 & 19-SGCS-2

Dimensions Are Out-to-Out of Bearing Bars**

No. of Bars	2	3	4	5	6	7	8	9	10	11	12	13	14	15	16
3/16" Bars	1-3/8	2-5/16	3-3/4	4-15/16	6-1/2	7-5/16	8-1/2	9-11/16	10-7/8	12-1/16	13-1/4	14-7/16	15-5/8	16-13/16	18
No. of Bars	17	18	19	20	21	22	23	24	25	26	27	28	29	30	31
3/16" Bars	19-3/16	20-3/4	21-9/16	22-3/4	23-13/16	25-1/8	26-3/16	27-1/2	28-11/16	29-7/8	31-1/16	32-3/4	33-7/16	34-5/8	35-13/16

*Use 1-3/16 based on Bearing Bars. 19-W-2, 19-DT-2 Bearing Bars Spaced 2-3/8" o.c. Width Is Half Of 19-W-4

(STAIR CON'T) ~ TRY C10×15.3 ($I_y = 2.27\,IN^4$, $S_y = 1.15\,IN^3$) ($I_x = 67.3\,IN^4$, $S_x = 13.5\,IN^3$)

• STRONG AXIS

• $L_b = 1^{FT}$ c/c

• $M_{CAP} = 0.66 F_y S_x = 0.66(36\,KSI)(13.5\,IN^3)$
$= 26.73^{K\cdot FT} > M_{UNF} = 8.69^{K\cdot FT}$ ✓OK

• $V_{CAP} = 0.4 F_y A_w (0.9) = 69.98^K > V_{UNF} = 1.82^K$

• $\Delta_{DES} = \frac{5wl^4}{384EI} = 0.29^{IN} \approx l/784 << l/240$ & 1^{IN} ✓OK

• COMBINED STRESSES $= \left(\frac{8.69}{26.73}\right)^{K\cdot FT} + \left(\frac{0.5}{3.11}\right)^{K\cdot FT} = 0.49 < 1.0$ ✓OK

WEAK AXIS

• $M_{CAP} = 0.9 F_y S_y = 3.11^{K\cdot FT} > M_{UN} = 0.5^{K\cdot FT}$ ✓OK

• $V_{CAP} = 0.4 F_y (A_{f_{x2}}) 0.9 = 29.38^K > V_{UNF}$ ✓OK

• $\Delta_{DES} = 0.50^{IN} \approx l/457 << l/240$ OR $1''$

CONSERVATIVE, BOTH STRINGERS RESISTING LATERAL LOAD

COLUMN DESIGN

• $R_{UNF} = 1.82^K + 0.2^K$ HARDWARE $+ (12.18^{\#}/FT \times 10^{FT}) = 2.14^K$

• $Kl = 1.0(10^{FT}) = 10$

• AISC 13TH ED ~ TABLE 4-4 → R_{UNF} CAPACITY $= 66.1^K > R_{UNF}$ ✓OK
HSS 4×4×1/4

~ COLUMN @ BASE OF STAIR IS CLIP ANGLE ATTACHED TO SLAB-ON-GRADE & C10×15.3 FRAMING INTO TOP OF INTERIOR ROOM WALLS

~ BASE PL DESIGN ~ NO MOMENT, JUST VERTICAL LOAD

• $M = N = \frac{10'' - (0.95 \times 4'')}{2} = 3.1^{IN}$, $n = 1'' \rightarrow M$ CONTROLS $= 363^{\#}$ ($X = 0.036 \rightarrow l = 0.19$)

• $t_{MIN} = l\sqrt{\frac{3.33 P_a}{F_y BN}} = 0.138'' \rightarrow$ USE $3/8''$ THICK $T_{UNF} = \left(\frac{300^{\#}\,\text{MAX} \times 18^{IN}}{7/8 \times 8.5^{IN}}\right)/2$ ANC

~ NO UPLIFT OR SHEAR IN ANCHOR BOLTS, BY INSPECTION (4) 1/2" ϕ EXPANSION ANCHOR BOLTS @ 7" c/c SPACING w/ 4" EMBED IS SUFFICIENT FOR 363# TENSION

ARCADIS

SUBJECT: TOPOK-WORKSHOP BLDG
STAIR DESIGN

JOB NO:

BY: MSL DATE: 1/8/15

CHKD: DATE:

PAGE I-30

SHEET 1

COLUMN/STRINGER CONNECTION

- $R_{UNF} = 2.02^K$
- AISC 13TH ED – TABLE 7-1

  (2)-3/4"ϕ BOLTS = $10.6^K \times 2$ BOLTS $= 21.2^K > R_{UNF}$ ✓ OK

ARCADIS

SUBJECT: TOPOK – WORKSHOP BLDG
INTERIOR ROOM CEILING

JOB NO:

BY: MSL DATE: 1/8/15

CHKD: DATE:

PAGE I-31

SHEET 1

INTERIOR ROOM CEILING

- LIVE LOAD = 50psf (SIGNAGE POSTED & LISTED ON DRAWINGS)
- DEAD LOAD = 3psf 3/4" PLYWOOD + 5psf MECH/ELE
  58psf SUPERIMPOSED LOAD
- REF VULCRAFT 1.5B METAL DECK – 22GA ~ MAX SPAN FOR LOAD = 7'-0" c/c
  (SHT I-32)
  MAX SPAN FM GLOBAL = 6'-0" c/c ← MAX
  MAX SPAN FOR CONSTRUCTION LOADS = 6'-6" c/c

→ USE 36/5 PATTERN SINCE NOT A TRUE DIAGRAPHM FOR BUILDING LATERAL RESTRAINT w/ 4 SIDELAP FASTENERS ~ #12 TEK SUPPORT FASTENERS
#10 TEK SIDELAP FASTENERS

(249#/FT DIAPHRAGM SHEAR STRENGTH
> 196#/FT MIN SEISMIC ATTACHMENTS (280#/FT × 0.7E)
← 280#/FT × 0.7

- REF SHT I-33 & 34 FOR METAL DECK SECTION CALLOUTS & NOTES

AGM Form 30 12-01

I-32

1.5 B, BI, BA, BIA, BSV

Maximum Sheet Length 42'-0
Extra charge for lengths under 6'-0
ICC ER-3415
FM Global Approved[2]

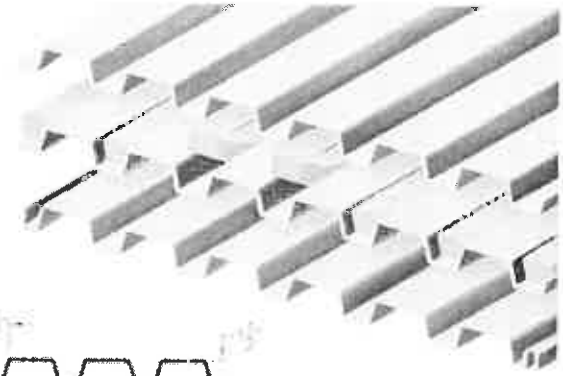

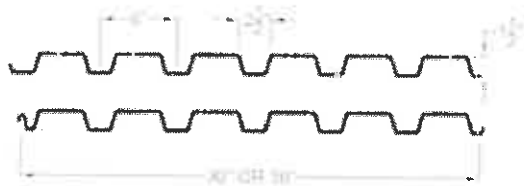

Interlocking side lap is not drawn to show actual detail.

SECTION PROPERTIES

Deck type	Design thickness in.	W psf	Section Properties I_p in^4/ft	S_p in^3/ft	I_n in^4/ft	S_n in^3/ft	V_a lbs/ft	F_y ksi
B24	0.0239	1.46	0.107	0.120	0.135	0.131	2634	60
B22	0.0295	1.78	0.155	0.186	0.183	0.192	1818	33
B20	0.0358	2.14	0.201	0.234	0.222	0.247	2193	33
B19	0.0418	2.49	0.246	0.277	0.260	0.289	2546	33
B18	0.0474	2.82	0.289	0.318	0.295	0.327	2870	33
B16	0.0598	3.54	0.373	0.408	0.373	0.411	3578	33

ACOUSTICAL INFORMATION

Deck Type	Absorption Coefficient 125	250	500	1000	2000	4000	Noise Reduction Coefficient[1]
1.5BA, 1.5BIA	.11	.18	.66	1.02	0.61	0.33	0.60

[1] Source: Riverbank Acoustical Laboratories. Test was conducted with 1.50 pcf fiberglass batts and 2 inch polyisocyanurate foam insulation for the SDI.

Type B (wide rib) deck provides excellent structural load carrying capacity per pound of steel utilized, and its nestable design eliminates the need for die-set ends.

1" or more rigid insulation is required for Type B deck.

Acoustical deck (Type BA, BIA) is particularly suitable in structures such as auditoriums, schools, and theatres where sound control is desirable. Acoustic perforations are located in the vertical webs where the load carrying properties are negligibly affected (less than 5%).

Inert, non-organic glass fiber sound absorbing batts are placed in the rib openings to absorb up to 60% of the sound striking the deck.

Batts are field installed and may require separation.

VERTICAL LOADS FOR TYPE 1.5B

No. of Spans	Deck Type	Max. SDI Const. Span	Allowable Total (PSF) / Load Causing Deflection of L/240 or 1 inch (PSF) — Span (ft.-in.) ctr to ctr of supports: 5-0	5-6	6-0	6-6	7-0	7-6	8-0	8-6	9-0	9-6	10-0
1	B24	4'-8	115 / 56	95 / 42	80 / 32	68 / 26	59 / 20	51 / 17	45 / 14	40 / 11	35 / 10	32 / 8	29 / 7
	B22	5'-7	98 / 81	81 / 61	68 / 47	58 / 37	50 / 30	44 / 24	38 / 20	34 / 17	30 / 14	27 / 12	25 / 10
	B20	6'-5	123 / 105	102 / 79	86 / 61	73 / 48	63 / 38	55 / 31	48 / 26	43 / 21	38 / 18	34 / 15	31 / 13
	B19	7'-1	146 / 129	121 / 97	101 / 75	86 / 59	74 / 47	65 / 38	57 / 31	51 / 26	45 / 22	40 / 19	36 / 16
	B18	7'-8	168 / 152	138 / 114	116 / 88	99 / 69	85 / 55	74 / 45	65 / 37	58 / 31	52 / 26	46 / 22	42 / 19
	B16	8'-8	215 / 196	178 / 147	149 / 113	127 / 89	110 / 71	96 / 58	84 / 48	74 / 40	66 / 34	60 / 29	54 / 24
2	B24	5'-10	124 / 153	103 / 115	86 / 88	74 / 70	64 / 56	56 / 45	49 / 37	43 / 31	39 / 26	35 / 22	31 / 19
	B22	6'-11	100 / 213	83 / 160	70 / 124	59 / 97	51 / 78	45 / 63	39 / 52	35 / 43	31 / 37	28 / 31	25 / 27
	B20	7'-9	128 / 267	106 / 201	89 / 155	76 / 122	66 / 97	57 / 79	51 / 65	45 / 54	40 / 46	36 / 39	32 / 33
	B19	8'-5	150 / 320	124 / 240	104 / 185	89 / 145	77 / 116	67 / 95	59 / 78	52 / 65	47 / 55	42 / 47	38 / 40
	B18	9'-1	169 / 369	140 / 277	118 / 213	101 / 168	87 / 134	76 / 109	67 / 90	59 / 75	53 / 63	48 / 54	43 / 46
	B16	10'-3	213 / 471	176 / 354	149 / 273	127 / 214	110 / 172	95 / 140	84 / 115	74 / 96	66 / 81	60 / 69	54 / 59
3	B24	5'-10	154 / 120	128 / 90	108 / 69	92 / 55	79 / 44	69 / 36	61 / 29	54 / 24	48 / 21	43 / 17	39 / 15
	B22	6'-11	124 / 167	103 / 126	87 / 97	74 / 76	64 / 61	56 / 50	49 / 41	43 / 34	39 / 29	35 / 24	31 / 21
	B20	7'-9	159 / 209	132 / 157	111 / 121	95 / 95	82 / 76	72 / 62	63 / 51	56 / 43	50 / 36	45 / 31	40 / 26
	B19	8'-5	186 / 250	154 / 188	130 / 145	111 / 114	96 / 91	84 / 74	74 / 61	65 / 51	58 / 43	52 / 37	47 / 31
	B18	9'-1	210 / 289	174 / 217	147 / 167	126 / 132	108 / 105	95 / 86	83 / 71	74 / 59	66 / 50	59 / 42	54 / 36
	B16	10'-3	264 / 369	219 / 277	185 / 214	158 / 168	136 / 135	119 / 109	105 / 90	93 / 75	83 / 63	74 / 54	67 / 46

Notes: 1. Minimum exterior bearing length required is 1.50 inches. Minimum interior bearing length required is 3.00 inches. If these minimum lengths are not provided, web crippling must be checked.
2. FM Global approved numbers and spans available on page 21.

TECHNICAL PRODUCT INFORMATION

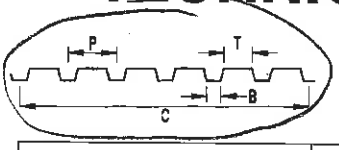

	Deck Type	Gauge	Approximate Dimensions in Inches																			
			Indiana				Nebraska				South Carolina				Texas				Alabama / New York			
			C	P	T	B	C	P	T	B	C	P	T	B	C	P	T	B	C	P	T	B
ROOF	1.5B, 1.5BI, 1.5BA, 1.5BIA 1.5BSV	24 22 20 19 18 16	NA 36 36 36 36 36	6.00	3.50	1.75	30 36 36 36 36 36	6.00	3.50	1.75	36 36 36 36 36 36	6.00	3.50	1.75	NA 36 36 36 36 36	6.00	3.50	1.75	36 36 36 36 36 36	6.00	3.50	1.75
ROOF	1.5F	22 20 18	30	6.00	4.25	0.50	36	6.00	4.25	0.50	36	6.00	4.25	0.50	36	6.00	4.25	0.50	36	6.00	4.25	0.50
ROOF	1.5A	22 20 18	36	6.00	5.00	0.38	36	6.00	5.00	0.38	36	6.00	5.00	0.38	NA	-	-	-	NA	-	-	-
ROOF	3N, 3NI, 3NA, 3NIA	22 20 18 16	24	8.00	5.38	1.88	24	8.00	5.38	1.88	24	8.00	5.38	1.88	24	8.00	5.38	1.88	24	8.00	5.38	1.88
ROOF	1.0E	26 24 22 20	36	4.00	1.13	1.13	32	4.00	1.01	1.25	33	3.67	0.90	0.90	33	3.67	1.00	1.00	36	4.00	1.13	1.13
NON-COMPOSITE	0.6C and 0.6CSV	28 26 24 22	NA 30 30 NA	2.50	0.62	0.62	NA 36 36 36	3.04	0.63	0.63	35 35 35 35	2.50	0.75	0.75	30 35 35 35	2.50	0.62	0.62	30 30 30 30	2.50	0.75	0.75
NON-COMPOSITE	1.0C and 1.0CSV	26 24 22 20	36	4.00	1.13	1.13	32	4.00	1.25	1.01	33	3.67	0.90	0.90	33	3.67	1.00	1.00	36	4.00	1.13	1.13
NON-COMPOSITE	1.3C and 1.3CSV	26 24 22 20	NA	-	-	-	NA	-	-	-	NA	-	-	-	32	4.57	1.06	1.06	NA	-	-	-
NON-COMPOSITE	1.5C	24 22 20 18	NA 36 36 36	6.00	1.75	3.50	30 36 36 36	6.00	1.75	3.50	36 36 36 36	6.00	1.75	3.50	30 36 36 36	6.00	1.75	3.50	36 36 36 36	6.00	1.75	3.50
NON-COMPOSITE	2C	22 20 18 16	36	12.0	5.00	5.00	36	12.0	5.00	5.00	36	12.0	5.00	5.00	36	12.0	5.00	5.00	36	12.0	5.00	5.00
NON-COMPOSITE	3C	22 20 18 16	36	12.0	4.75	4.75	36	12.0	4.75	4.75	36	12.0	4.75	4.75	36	12.0	4.75	4.75	36	12.0	4.75	4.75
COMPOSITE	1.5VL and 1.5VLI	22 20 19 18 16	36	6.00	3.50	1.75	36	6.00	3.50	1.75	36	6.00	3.50	1.75	36	6.00	3.50	1.75	36	6.0	3.50	1.75
COMPOSITE	1.5VLR	22 20 19 18 16	36	6.00	1.75	3.50	36	6.00	1.75	3.50	36	6.00	1.75	3.50	36	6.00	1.75	3.50	36	6.0	1.75	3.50
COMPOSITE	2VLI	22 20 19 18 16	36	12.0	5.00	5.00	36	12.0	5.00	5.00	36	12.0	5.00	5.00	36	12.0	5.00	5.00	36	12.0	5.00	5.00
COMPOSITE	3VLI	22 20 19 18 16	36	12.0	4.75	4.75	36	12.0	4.75	4.75	36	12.0	4.75	4.75	36	12.0	4.75	4.75	36	12.0	4.75	4.75

Vulcraft Steel Deck — FM Global Approved Spans

Maximum Vulcraft deck spans approved for use in FM Global constructions are shown below. The Engineer of Record must investigate the design as published by FM Global for the required attachment of the steel deck to the supporting structure, deck-to-deck fastening, attachment of insulation to the roof deck, etc. Reference shall be made to: https://roofnav.fmglobal.com

Roof Deck

	FM Span / Profile					
Gauge	1.5B, 1.5BI	1.5BA, 1.5 BIA	1.5F	1.5A	3N, 3NI	3NA, 3NIA
22	6' - 0"	5' - 9"	4' - 11"	4' - 0"	12' - 0"	12' - 7"
20	6' - 6"	6' - 4"	5' - 5"	5' - 3"	13' - 5"	13' - 11"
18	7' - 5"	7' - 3"	6' - 3"	6' - 0"	15' - 10"	16' - 1"
16	9' - 4"	7' - 11"	—	—	18' - 1"	18' - 3"

Cellular Deck

	FM Span / Profile	
Gauges	1.5BP, 1.5BPA	3NP, 3NPA
20/20	6' - 6"	13' - 5"
20/18	6' - 6"	13' - 5"
18/20	7' - 5"	15' - 10"
18/18	7' - 5"	15' - 10"
18/16	7' - 5"	15' - 10"
16/18	9' - 4"	18' - 1"
16/16	9' - 4"	18' - 1"

Steel Roof Deck

RECOMMENDED MAXIMUM SPANS FOR CONSTRUCTION AND MAINTENANCE LOADS STANDARD FOR 1½ INCH AND 3 INCH ROOF DECK						
	TYPE	SPAN CONDITION	SPAN		MAX. RECOMMENDED SPANS ROOF DECK CANTILEVER	
			FT.-IN.	METERS	FT.-IN.	METERS
NARROW RIB DECK	NR22	1	3′-10″	1.15 m	1′-0″	.30 m
	NR22	2 or more	4′-9″	1.45 m		
	NR20	1	4′-10″	1.45 m	1′-2″	.35 m
	NR20	2 or more	5′-11″	1.80 m		
	NR18	1	5′-11″	1.80 m	1′-7″	.45 m
	NR18	2 or more	6′-11″	2.10 m		
INTERMEDIATE RIB DECK	IR22	1	4′-6″	1.35 m	1′-2″	.35 m
	IR22	2 or more	5′-6″	1.65 m		
	IR20	1	5′-3″	1.60 m	1′-5″	.40 m
	IR20	2 or more	6′-3″	1.90 m		
WIDE RIB DECK	WR22	1	5′-6″	1.65 m	1′-11″	.55 m
	WR22	2 or more	6′-6″	1.75 m		
	WR20	1	6′-3″	1.90 m	2′-4″	.70 m
	WR20	2 or more	7′-5″	2.25 m		
	WR18	1	7′-6″	2.30 m	2′-10″	.85 m
	WR18	2 or more	8′-10″	2.70 m		
DEEP RIB DECK	3DR22	1	11′-0″	3.35 m	3′-5″	1.05 m
	3DR22	2 or more	13′-0″	3.95 m		
	3DR20	1	12′-6″	3.80 m	3′-11″	1.20 m
	3DR20	2 or more	14′-8″	4.45 m		
	3DR18	1	15′-0″	4.55 m	4′-9″	1.45 m
	3DR18	2 or more	17′-8″	5.40 m		

CANTILEVER DESIGN

STEEL DECK CANTILEVER
EXAMPLE: WR22

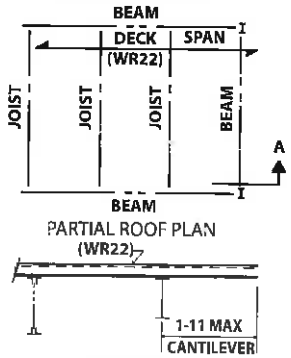

SECTION A

Notes:

1. Adjacent span: Limited to those spans determined in Section 2.4 of Roof Deck Standards. In those instances where the adjacent span is less than 3 times the cantilever span, the individual manufacturer should be consulted for the appropriate cantilever span.
2. Sidelaps must be attached at end of cantilever and at a maximum of 12 inches (300 mm) on center from end.
3. No permanent suspended loads are to be supported by the steel deck.
4. The deck must be completely attached to the supports and at the sidelaps before any load is applied to the cantilever.
5. Service loads may be more severe than indicated in section 2.4.A.7.

TYPICAL FASTENER LAYOUT

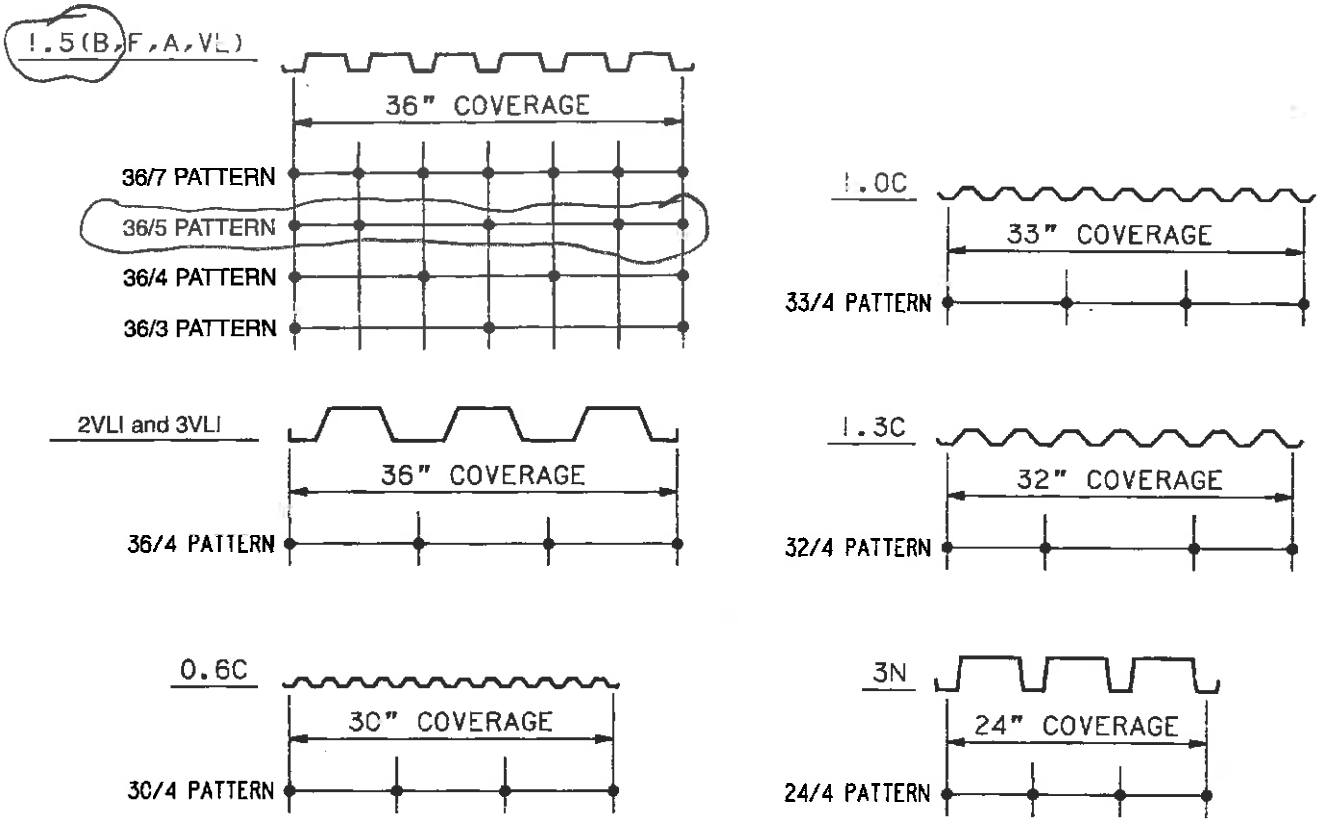

DIAPHRAGM SHEAR STRENGTH AND STIFFNESS DESIGN EXAMPLE

For roof plan shown, calculate the deflection of diaphragm ($\Delta_{\mathbb{C}L}$ center line).

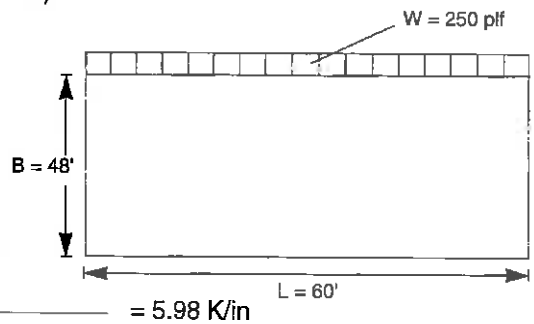

Joist spacing = 5'-0"
Deck: 1.5B 22 (WR) in 15'-0" panels
(3 span condition)
Fasteners: Support – 36/3 pattern
W/ 5/8" puddle welds
Sidelap – 1 #10 TEK

From diaphragm strength tables: $K_1 = 0.617$, $D_B = 2209$, and $K_2 = 870$

$$G' = \frac{K_2}{3.78 + \frac{0.3D_B}{\text{Span}} + 3K_1\,\text{Span}} = \frac{870}{3.78 + \frac{0.3(2209)}{5} + 3(0.617)\,(5)} = 5.98\ \text{K/in}$$

$$\Delta_{\mathbb{C}L} = \frac{WL^2}{8xBxG'} = \frac{0.250\,(60)^2}{8\,(48)\,(5.98)} = 0.39\ \text{in}$$

Strength Check

$$R = WL/2 = \frac{250\,(60)}{2} = 7500\ \text{lbs} \qquad S = \frac{7500}{48} = 156\ \text{plf} < 224\ \text{plf (from page 86) OK}$$

1.5 (B, BI) 22 ALLOWABLE DIAPHRAGM SHEAR STRENGTH (PLF)
SUPPORT FASTENERS: 3/4" puddle welds
SIDELAP FASTENERS: welded[1]

Factor of safety = 2.35

	# OF SIDELAP FASTENERS	DIAPHRAGM SHEAR STRENGTH (PLF) DECK SPAN (FT.-IN.) 3.00	3.50	4.00	4.50	5.00	5.50	6.00	6.50	7.00	7.50	8.00	8.50	9.00	9.50	10.00	K1
	0	585	509	443	391	350	316	288	264	244	226	210	197	186	177	168	0.486
	1	734	643	572	514	461	417	380									0.287
	2	856	766	685	619	563	517	473	435	402	374	349	328	310			0.204
	3	982	877	790	717	656	603	558	519	481	448	419	384	343	308	278	0.158
	4	1083	977	886	808	742	685	635	592	554	494	434	384	343	308	278	0.129
36/7	5	1169	1064	972	892	823	762	709	657	567	494	434	384	343	308	278	0.109
	6	1244	1142	1050	969	898	835	771	657	567	494	434	384	343	308	278	0.094
	7	1308	1210	1120	1039	967	902	771	657	567	494	434	384	343	308	278	0.083
	8	1362	1269	1182	1103	1030	918	771	657	567	494	434	384	343	308	278	0.074
	9	1409	1321	1238	1160	1088	918	771	657	567	494	434	384	343	308	278	0.067
	10	1450	1367	1287	1212	1111	918	771	657	567	494	434	384	343	308	278	0.061

D_B = 129 K2= 870

	0	518	455	405	361	323	292	266	244	225	208	194	182	172	163	155	0.583
	1	641	572	514	466	426	392	358									0.319
	2	741	670	609	557	512	473	439	410	383	356	333	312	295			0.219
	3	821	752	691	637	590	548	511	478	449	423	399	378	343	308	278	0.167
	4	884	820	760	707	658	615	576	541	510	481	434	384	343	308	278	0.135
36/5	5	934	875	819	767	719	675	635	599	566	494	434	384	343	308	278	0.113
	6	974	920	868	818	772	728	688	652	567	494	434	384	343	308	278	0.098
	7	1006	957	909	862	818	775	736	657	567	494	434	384	343	308	278	0.086
	8	1032	988	944	900	858	817	771	657	567	494	434	384	343	308	278	0.076
	9	1054	1014	973	933	893	854	771	657	567	494	434	384	343	308	278	0.069
	10	1071	1035	998	960	923	886	771	657	567	494	434	384	343	308	278	0.063

D_B = 758 K2= 870

	0	396	349	310	273	244	219	199	182	168	155	144	135	127	121	115	0.728
	1	514	461	416	379	347	320	292									0.358
	2	602	550	504	463	428	397	370	346	324	303	283	266	251			0.237
	3	666	618	574	534	497	465	436	409	386	364	345	328	312	296	278	0.177
	4	714	671	630	592	556	523	493	466	441	418	397	378	343	308	278	0.142
36/4	5	749	712	674	639	605	573	543	516	490	467	434	384	343	308	278	0.118
	6	776	743	710	677	645	615	586	559	534	494	434	384	343	308	278	0.101
	7	796	767	738	708	679	651	623	597	567	494	434	384	343	308	278	0.088
	8	812	787	761	734	707	681	655	630	567	494	434	384	343	308	278	0.078
	9	824	802	779	755	731	706	682	657	567	494	434	384	343	308	278	0.071
	10	834	815	794	773	750	728	706	657	567	494	434	384	343	308	278	0.064

D_B = 1072 K2= 870

	0	331	296	267	242	217	195	177	162	149	137	128	119	113	107	101	0.971
	1	417	383	353	326	302	281	262									0.408
	2	471	442	414	389	365	343	323	305	288	273	259	247	235			0.258
	3	506	482	458	435	413	392	372	354	337	321	307	293	280	269	258	0.189
	4	529	509	489	469	449	430	412	394	378	362	347	333	320	308	278	0.149
36/3	5	544	528	512	494	477	460	443	427	411	396	382	368	343	308	278	0.123
	6	555	542	528	513	498	483	468	453	439	424	411	384	343	308	278	0.105
	7	563	552	540	528	515	501	488	474	461	448	434	384	343	308	278	0.091
	8	569	560	550	539	527	515	504	492	479	467	434	384	343	308	278	0.081
	9	573	566	557	548	538	527	517	506	495	484	434	384	343	308	278	0.072
	10	577	570	563	555	546	537	527	517	507	494	434	384	343	308	278	0.066

D_B = 2209 K2= 870

1 The shaded values do not comply with the minimum spacing requirements for sidelap connections and shall not be used except with properly spaced button-punched sidelaps with 1.5BI deck.

$$G' = \frac{K_2}{3.78 + \frac{0.3 * D_B}{SPAN} + 3 * K_1 * SPAN}, \text{ Kips/inch}$$

SPAN is in feet

1.5 (B, BI, F, A) 22 ALLOWABLE DIAPHRAGM SHEAR STRENGTH (PLF)
SUPPORT FASTENERS: 5/8" puddle welds[1]
SIDELAP FASTENERS: welded[2]

Factor of safety = 2.35

	# OF SIDELAP FASTENERS	DIAPHRAGM SHEAR STRENGTH (PLF) DECK SPAN (FT.-IN.) 3.00	3.50	4.00	4.50	5.00	5.50	6.00	6.50	7.00	7.50	8.00	8.50	9.00	9.50	10.00	K1
	0	484	420	366	323	289	261	238	218	201	187	174	163	154	146	139	0.486
	1	630	554	493	443	400	362	330									0.287
	2	757	673	604	546	498	457	423	389	360	335	313	283	252			0.204
	3	865	778	704	641	587	542	502	467	417	363	319	283	252	226	204	0.158
	4	956	869	793	727	670	620	568	484	417	363	319	283	252	226	204	0.129
36/7	5	1031	947	871	804	745	676	568	484	417	363	319	283	252	226	204	0.109
	6	1093	1013	940	873	813	676	568	484	417	363	319	283	252	226	204	0.094
	7	1145	1070	999	934	818	676	568	484	417	363	319	283	252	226	204	0.083
	8	1188	1118	1051	988	818	676	568	484	417	363	319	283	252	226	204	0.074
	9	1224	1160	1097	1009	818	676	568	484	417	363	319	283	252	226	204	0.067
	10	1254	1195	1136	1009	818	676	568	484	417	363	319	283	252	226	204	0.061

D_B = 129 D_F = 226 D_A = 356 K2= 870

>280#/F MIN X 0.7 = 196#/F

	0	428	376	335	299	267	241	220	201	186	172	160	150	142	134	128	0.583
	1	549	491	443	402	368	338	312									0.319
	2	642	584	533	486	451	418	388	363	340	320	299	281	252			0.219
	3	713	658	608	564	524	488	457	428	403	363	319	283	252	226	204	0.167
	4	766	716	670	626	586	550	517	484	417	363	319	283	252	226	204	0.135
36/5	5	807	762	719	678	640	604	568	484	417	363	319	283	252	226	204	0.113
	6	838	798	759	721	685	650	568	484	417	363	319	283	252	226	204	0.098
	7	862	827	792	757	723	676	568	484	417	363	319	283	252	226	204	0.086
	8	881	850	819	787	755	676	568	484	417	363	319	283	252	226	204	0.076
	9	896	869	841	812	782	676	568	484	417	363	319	283	252	226	204	0.069
	10	908	884	859	832	806	676	568	484	417	363	319	283	252	226	204	0.063

D_B = 758 D_F = 886 D_A = 974 K2= 870

	0	328	288	256	226	201	181	165	151	139	128	119	112	105	100	95	0.728
	1	442	398	361	329	302	278	257									0.358
	2	522	480	442	409	379	353	329	309	290	273	258	242	226			0.237
	3	577	540	505	472	443	415	391	368	348	330	313	283	252	226	204	0.177
	4	615	583	552	522	494	467	443	420	399	363	319	283	252	226	204	0.142
36/4	5	642	615	588	561	535	510	486	464	417	363	319	283	252	226	204	0.118
	6	662	639	615	591	568	545	522	484	417	363	319	283	252	226	204	0.101
	7	676	657	636	615	594	573	552	484	417	363	319	283	252	226	204	0.088
	8	687	670	653	634	615	596	568	484	417	363	319	283	252	226	204	0.078
	9	695	681	666	649	633	615	568	484	417	363	319	283	252	226	204	0.071
	10	702	690	676	662	647	631	568	484	417	363	319	283	252	226	204	0.064

D_B = 1072 D_F = 1216 D_A = 1282 K2= 870

	0	274	245	221	200	179	161	147	134	123	114	105	99	93	88	84	0.971
	1	356	329	304	281	261	244	228									0.408
	2	403	381	359	339	320	302	285	270	256	243	231	221	211			0.258
	3	431	413	396	378	361	345	329	314	300	287	275	264	252	226	204	0.189
	4	448	434	420	406	391	377	363	349	336	323	311	283	252	226	204	0.149
36/3	5	459	448	437	425	413	400	388	375	363	352	319	283	252	226	204	0.123
	6	467	458	449	439	428	418	407	395	385	363	319	283	252	226	204	0.105
	7	472	465	457	449	440	431	422	412	403	363	319	283	252	226	204	0.091
	8	476	470	464	457	449	441	433	425	416	363	319	283	252	226	204	0.081
	9	479	474	469	463	456	449	442	435	417	363	319	283	252	226	204	0.072
	10	481	477	472	467	462	456	449	443	417	363	319	283	252	226	204	0.066

D_B = 2209 D_F = 2428 D_A = 2442 K2= 870

[1] A 3/8" x 1-1/4" arc seam weld shall be used with F deck or A deck.

[2] The shaded values do not comply with the minimum spacing requirements for sidelap connections and shall not be used except with properly spaced button-punched sidelaps with 1.5BI deck.

$$G' = \frac{K_2}{3.78 + \frac{0.3 * D_X}{SPAN} + 3 * K_1 * SPAN}$$, Kips/inch

SPAN is in feet

Substitute D_B, D_F, or D_A for D_X

DIAPHRAGM

1.5 (B, F, A) 22 ALLOWABLE DIAPHRAGM SHEAR STRENGTH (PLF)
SUPPORT FASTENERS: 5/8" puddle welds[1]
SIDELAP FASTENERS: #10 TEK screws

Factor of safety = 2.35

	# OF SIDELAP FASTENERS	DIAPHRAGM SHEAR STRENGTH (PLF) DECK SPAN (FT.-IN.) 3.00	3.50	4.00	4.50	5.00	5.50	6.00	6.50	7.00	7.50	8.00	8.50	9.00	9.50	10.00	K1
	0	484	420	366	323	289											0.486
	1	557	487	432	383	343	310	283									0.377
	2	626	550	489	440	397	359	328	301	278	259	241	227	214			0.308
	3	691	610	545	491	447	408	373	343	317	295	275	258	244	226	204	0.261
	4	751	667	598	541	493	452	418	384	355	330	309	283	252	226	204	0.226
36/7	5	806	720	648	588	537	494	457	425	394	363	319	283	252	226	204	0.199
	6	857	769	696	633	580	534	495	461	417	363	319	283	252	226	204	0.178
	7	903	816	741	676	621	574	532	484	417	363	319	283	252	226	204	0.161
	8	946	859	783	717	661	611	568	484	417	363	319	283	252	226	204	0.147
	9	985	899	823	757	698	648	568	484	417	363	319	283	252	226	204	0.135
	10	1021	936	860	794	735	676	568	484	417	363	319	283	252	226	204	0.125

D_B = 129 D_F = 226 D_A = 356 K2= 870

>280#/F x 0.7 = 196#/F

	0	428	376	335	299	267											0.583
	1	490	435	389	352	321	290	265									0.433
	2	546	488	440	399	365	336	309	284	263	244	228	214	202			0.345
	3	594	536	486	443	407	376	348	325	301	280	261	245	232	220	204	0.286
	4	637	579	529	485	446	413	384	359	336	316	295	277	252	226	204	0.245
36/5	5	675	618	567	523	483	449	419	392	368	346	319	283	252	226	204	0.214
	6	707	652	602	558	518	483	451	423	398	363	319	283	252	226	204	0.190
	7	736	683	634	590	550	514	482	453	417	363	319	283	252	226	204	0.171
	8	761	710	663	619	580	544	511	481	417	363	319	283	252	226	204	0.155
	9	782	735	689	647	607	571	538	484	417	363	319	283	252	226	204	0.142
	10	801	756	713	671	633	597	564	484	417	363	319	283	252	226	204	0.131

D_B = 758 D_F = 886 D_A = 974 K2= 870

	0	328	288	256	226	201											0.728
	1	388	345	310	281	255	230	210									0.509
	2	439	395	358	326	299	276	255	234	216	200	186	175	165			0.391
	3	482	438	400	367	339	314	292	272	254	236	220	207	195	185	176	0.318
	4	518	476	438	405	375	349	325	305	286	270	254	238	225	213	203	0.267
36/4	5	548	508	471	438	408	381	357	335	316	298	282	268	252	226	204	0.231
	6	573	535	500	467	438	411	386	364	343	325	308	283	252	226	204	0.203
	7	594	559	525	494	464	437	413	390	369	350	319	283	252	226	204	0.181
	8	611	579	547	517	489	462	437	415	394	363	319	283	252	226	204	0.164
	9	626	596	567	538	510	484	460	437	416	363	319	283	252	226	204	0.149
	10	639	611	583	556	530	504	481	458	417	363	319	283	252	226	204	0.137

D_B = 1072 D_F = 1216 D_A = 1282 K2= 870

	0	274	245	221	200	179											0.971
	1	319	290	265	243	224	207	191									0.617
	2	354	327	302	279	260	242	226	212	199	185	173	162	153			0.452
	3	381	356	332	310	290	272	256	241	228	215	204	194	183	173	165	0.356
	4	401	378	357	336	317	299	282	267	253	240	229	218	208	199	190	0.294
36/3	5	417	397	377	358	339	322	306	290	276	263	251	240	230	220	204	0.251
	6	429	411	393	375	358	342	326	311	297	284	272	260	250	226	204	0.218
	7	439	423	407	390	374	359	344	329	316	303	290	279	252	226	204	0.193
	8	446	432	418	403	388	373	359	345	332	319	307	283	252	226	204	0.173
	9	453	440	427	414	400	386	373	360	347	334	319	283	252	226	204	0.157
	10	458	447	435	423	410	397	385	372	360	348	319	283	252	226	204	0.144

D_B = 2209 D_F = 2428 D_A = 2442 K2= 870

[1] A 3/8" x 1-1/4" arc seam weld shall be used with F deck or A deck.

$$G' = \frac{K_2}{3.78 + \frac{0.3 * D_X}{SPAN} + 3 * K_1 * SPAN}, \text{ Kips/inch}$$

SPAN is in feet

Substitute D_B, D_F, or D_A for D_X

1.5 (B, F, A) 22 ALLOWABLE DIAPHRAGM SHEAR STRENGTH (PLF)
SUPPORT FASTENERS: #12 TEK screws
SIDELAP FASTENERS: #10 TEK screws

Factor of safety = 2.35

	# OF SIDELAP FASTENERS	DIAPHRAGM SHEAR STRENGTH (PLF) DECK SPAN (FT.-IN.) 3.00	3.50	4.00	4.50	5.00	5.50	6.00	6.50	7.00	7.50	8.00	8.50	9.00	9.50	10.00	K1
36/7	0	283	246	214	189	169											0.549
	1	355	311	276	248	223	202	184									0.414
	2	419	371	332	299	273	250	229	210	195	181	169	159	150			0.333
	3	475	424	382	347	317	292	270	251	233	217	203	190	180	170	162	0.278
	4	524	473	429	391	359	332	308	287	268	252	236	222	210	199	189	0.239
	5	566	515	471	432	398	369	343	321	301	283	267	253	240	226	204	0.209
	6	602	553	508	469	435	404	377	353	332	313	295	280	252	226	204	0.186
	7	633	585	542	503	468	437	409	384	361	341	319	283	252	226	204	0.168
	8	659	614	572	534	499	467	439	413	389	363	319	283	252	226	204	0.152
	9	682	639	599	562	527	495	466	440	416	363	319	283	252	226	204	0.140
	10	701	661	623	587	553	521	492	466	417	363	319	283	252	226	204	0.129

D_B = 129 D_F = 226 D_A = 356 K2= 870

>1910#/FT MIN SHEAR

36/5	0	250	220	196	175	156											0.659
	1	310	276	249	225	206	189	173									0.474
	2	358	324	295	269	248	229	213	198	185	172	161	151	143			0.370
	3	397	364	334	308	285	265	247	231	217	205	193	183	173	164	155	0.304
	4	427	396	368	342	319	298	279	262	247	233	221	209	199	190	181	0.257
	5	452	423	396	371	348	327	307	290	274	260	246	234	223	213	204	0.223
	6	471	445	420	396	373	352	333	315	299	284	270	258	246	226	204	0.197
	7	486	463	440	417	396	375	356	339	322	307	293	280	252	226	204	0.177
	8	499	478	456	435	415	395	377	359	343	328	314	283	252	226	204	0.160
	9	509	490	471	451	432	413	395	378	362	347	319	283	252	226	204	0.146
	10	518	500	483	464	446	429	412	395	379	363	319	283	252	226	204	0.134

D_B = 758 D_F = 886 D_A = 974 K2= 870

36/4	0	191	169	150	132	118											0.823
	1	248	223	201	183	168	155	141									0.554
	2	291	266	244	224	207	192	179	167	157	147	137	129	121			0.417
	3	322	299	278	258	241	225	211	198	187	176	167	159	151	143	136	0.334
	4	345	325	305	286	269	253	239	226	214	202	192	183	175	167	160	0.279
	5	362	344	326	309	293	277	263	250	237	226	215	206	197	188	181	0.240
	6	375	359	343	328	312	298	284	271	259	247	236	226	217	208	200	0.210
	7	385	371	357	343	329	315	302	289	277	266	255	245	235	226	204	0.187
	8	392	380	368	355	342	329	317	305	293	282	272	262	252	226	204	0.168
	9	398	388	377	365	353	342	330	319	308	297	287	277	252	226	204	0.153
	10	403	394	384	373	363	352	341	331	320	310	300	283	252	226	204	0.140

D_B = 1072 D_F = 1216 D_A = 1282 K2= 870

36/3	0	160	143	129	117	105											1.098
	1	202	185	171	157	146	136	127									0.665
	2	228	214	200	188	176	166	156	147	139	132	126	119	114			0.477
	3	245	233	222	210	200	190	180	171	163	156	148	142	136	130	125	0.372
	4	255	246	236	227	217	208	199	191	183	175	168	161	155	149	143	0.305
	5	263	255	247	239	231	222	214	207	199	192	185	178	172	166	160	0.258
	6	268	262	255	248	241	234	226	219	212	205	199	192	186	180	175	0.224
	7	272	267	261	255	249	242	236	229	223	217	210	204	198	193	187	0.198
	8	275	270	266	260	255	249	244	238	232	226	220	215	209	204	198	0.177
	9	277	273	269	265	260	255	250	245	239	234	229	223	218	213	204	0.160
	10	279	275	272	268	264	259	255	250	245	240	236	231	226	221	204	0.146

D_B = 2209 D_F = 2428 D_A = 2442 K2= 870

$$G' = \frac{K_2}{3.78 + \frac{0.3 * D_X}{SPAN} + 3 * K_1 * SPAN}$$, Kips/inch

SPAN is in feet

Substitute D_B, D_F, or D_A for D_X

DIAPHRAGM

6 7 8 9 10 I-33

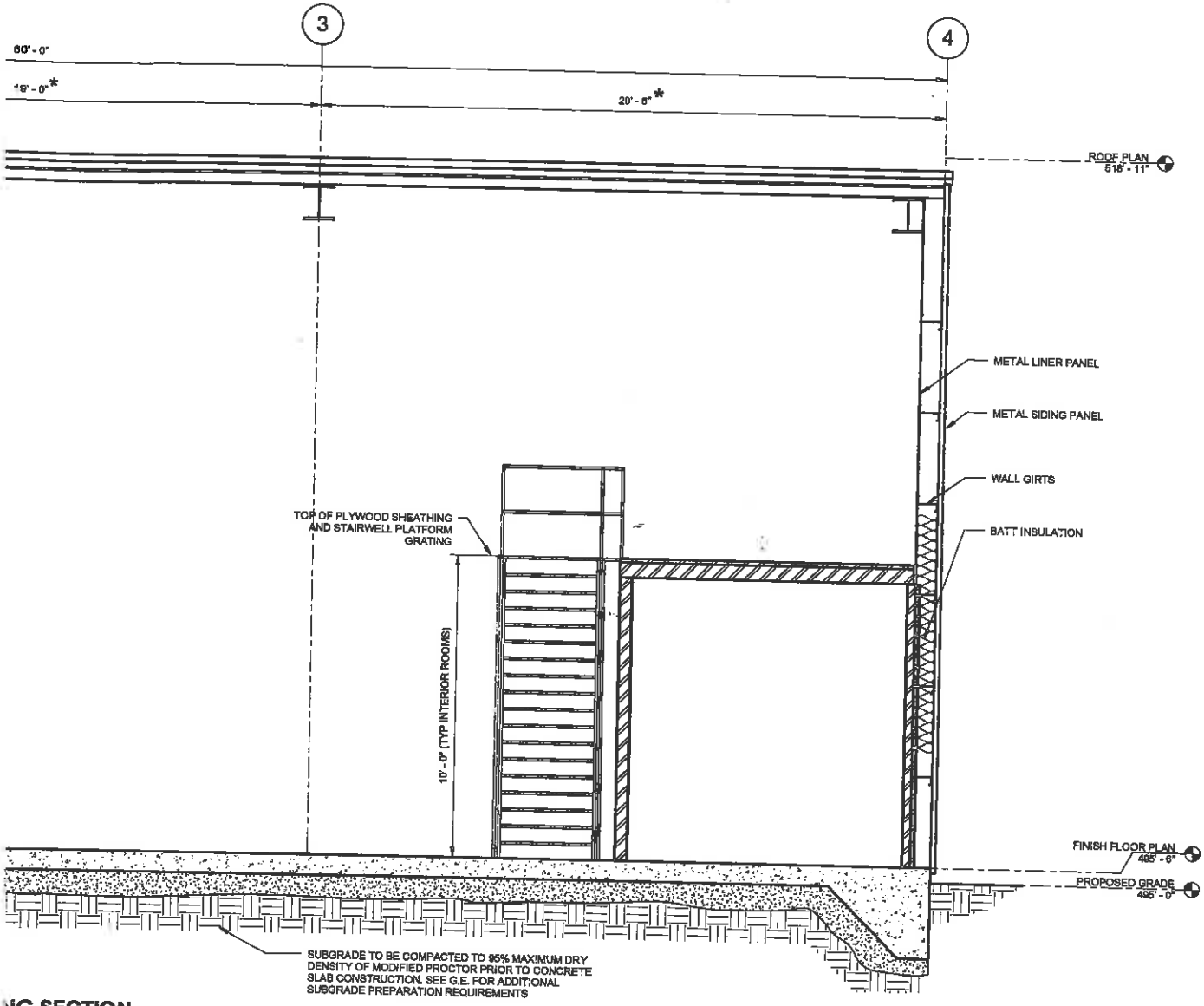

NG SECTION

NOTES:

1. PHOTOVOLTAIC MODULES NOT SHOWN FOR CLARITY.

* COLUMN AND FOUNDATION LOCATIONS TO BE VERIFIED PER APPROVED PRE-ENGINEERED BUILDING COLUMN LOCATIONS.

- DRAFT - NOT FOR CONSTRUCTION

No. / Date	DESCRIPTION	GM/SPEC	DWN	CHKD	SUPV	APVD BY
C 12/30/14	SUPPLEMENTAL PRE-FINAL (60%) DESIGN SUBMITTAL		CMW	MSL	JB	RAK

REVISIONS

APPROVED BY

SO	
SUPV	JB
DSGN	MSL
DWN	CMW
CHKD	MSL
OK	RAK
DATE	12/30/14
SCALES	NONE or AS SHOWN

TOPOCK GROUNDWATER REMEDIATION PROJECT

WORKSHOP BUILDING SECTION

GAS TRANSMISSION & DISTRIBUTION
PACIFIC GAS AND ELECTRIC COMPANY
SAN FRANCISCO, CALIFORNIA

MICROFILM	
BILL OF MATL	
DWG LIST	
SUPSDS	
SUPSD BY	
SHEET NO.	of SHEETS
S-15-09	REV

IND GUST) V=110 MPH - ULTIMATE, OR MINIMUM NET
Z - Iw = 1.0, WIND PRESSURE, Pnet = 20 PSF WHICHEVER IS GREATER

NCLOSED.
FICIENT - ±0.55.
DING SHALL BE DESIGNED FOR THE CONDITIONS OF
RESSURES.

OR - Is=1.0.

3.5 COLUMN 10 KIPS

NSE ACCELERATIONS - Ss=0.230, S1=0.120.
FICIENTS - Sds=0.245, Sd1=0.186.
SYSTEMS:
ORDINARY STEEL MOMENT FRAMES
BASE SHEAR: V=1.79 KIPS (TO BE VERIFIED BY METAL BUILDING MFR)
ORDINARY STEEL CONCENTRICALLY BRACED FRAMES
GE SHEAR: V=1.69 KIPS (TO BER VERIFIED BY METAL BUILDING MFR)
UIVALENT LATERAL FORCE.
ME (ALONG COLUMN LINE 2&3)
S HAVE BEEN DESIGNED FOR THE FOLLOWING MAXIMUM
THE METAL BUILDING MANUFACTURER SHALL
SUCH THAT THE ACTUAL REACTIONS DO NOT EXCEED
L REACTIONS EXCEED THOSE LISTED, THE CONTRACTOR
E-DESIGNING THE FOUNDATIONS TO THE SATISFACTION
DDITIONAL COST TO THE OWNER.

AR

ATION NOTES:

L OR GEOTECHNICAL ENGINEER DETERMINES THAT EXPANSIVE SOILS
SUES OF CONCERN MAY BE PRESENT, THEN HE/SHE MAY REQUIRE THAT
MADE TO THE FOUNDATION DESIGN TO SAFEGUARD AGAINST DAMAGE
NESS OR OTHER GEOLOGIC ISSUES. IF THIS BECOMES THE SITUATION THEN
RUCTION MUST BE HALTED AND THE GEOTECHNICAL ENGINEER SHALL PROVIDE
T WITH RECOMMENDATIONS IN CONSIDERATION OF THE CONDITIONS.

NOTES AND STRUCTURAL SPECIFICATIONS FOR ADDTIONAL REQUIREMENTS.

RIAL: TO BE CRUSHED GRAVEL MEETING THE FOLLOWING GRADATION AND COMPACTED
ENSITY OF MODIFIED PROCTOR.

TAL PERCENT PASSING

100
70 TO 100
50 TO 90
30 TO 60
8 TO 33
0 TO 8

C. CONCRETE NOTES:

1. DETAILS, WORKMANSHIP, AND GENERAL PROCEDURE SHALL CONFORM TO ACI 318, ACI 315, ACI 301, ACI SP66 DETAILING MANUAL, AND CRSI MANUAL OF STANDARD PRACTICE, UNLESS OTHERWISE NOTED.
2. MINIMUM COMPRESSIVE STRENGTH AT 28 DAYS - 4,500 PSI.
3. BAR REINFORCING - ASTM A615 GRADE 60.
4. WELDED WIRE FABRIC REINFORCING - ASTM A185.
5. ALL LAP SPLICES SHALL BE CLASS B OR AS SHOWN.
6. CONCRETE COVER OVER REINFORCING:
   3" FOR CONCRETE CAST AGAINST EARTH.
   2" OTHERWISE.
   SLABS ON GRADE - AS SHOWN.
7. PLACE, SUPPORT AND SECURE REINFORCEMENT AGAINST DISPLACEMENT. DO NOT DEVIATE FROM REQUIRED POSITION.
8. ELASTOMERIC SEALANT FOR JOINTS SHALL BE SIKAFLEX -2C SL OR EQUAL.
9. PREFORMED PLASTIC ADHESIVE WATERSTOP (PPAWS FR)
   SINGLE COMPONENT SELF-SEALING PLASTIC ADHESIVE TYPE EXTRUDED ROPE FORM BETWEEN TWO PROTECTIVE SILICONE TREATED PAPERS, 1/2" X 1-1/8" SQUARE CROSS SECTION. 1 INCH LAP SPLICE FURNISH WITH PRIMER HENRY COMPANY PRODUCTS SF312-SYNKO-FLEX WATERSTOP FR OR AS APPROVED.

(FOR INTERIOR ROOM CEILING)

D. METAL DECK NOTES:

CLASS 280

TYPE	DEPTH (IN)	PANEL WIDTH (IN)	DESIGN THICKNESS (IN)	MIN. YIELD STREIGNTH Fy (KSI)	MIN. (+) S (IN3/FT)	MIN. (+) I (IN4/FT)	MIN. DIAPHRAGM SHEAR CAPACITY (LBS/FT)	FINISH
ROOF DECK	1-1/2	36	0.0295	33 (ASTM A653)	0.186	0.155	400	GALVANIZED*

* GALVANIZING SHALL CONFORM TO ASTM A924 WITH COATING CLASS OF G90 AS DEFINED IN ASTM A653.

1. DECK UNIT ANCHORAGE TO STEEL SUPPORTING MEMBERS UTILIZING ARC SPOT PUDDLE WELDS OR MECHANICAL FASTENERS BASED ON THE FOLLOWING MIMINUMS:
   A. ARC SPOT WELDS SHALL BE 5/8" MINIMUM VISIBLE DIAMETER OR
   B. #12 TEKS (SELF-DRILLING FASTENERS BY ITW BUILDEX) WITH THE ATTACHMENT PATTERN OF 36/7 36/5
2. MINIMUM SIDE LAP ATTACHMENT SHALL BE 6 FASTENERS PER SPAN AND SHALL BE ARC SPOT PUDDLE WELDS OR MECHANICAL FASTENERS: 4
   A. ARC SPOT PUDDLE WELDS SHALL BE 5/8" MINIMUM VISIBLE DIAMETER OR
   B. #10 TEK SCREW
3. MINIMUM EDGE ATTACHMENT SHALL BE 6" AND SHALL BE 5/8" MINIMUM VISIBLE DIAMETER.
4. DECKING SHALL BE INSTALLED CONTINUOUS OVER A MINIMUM OF 3 SPANS.

THE EXTERIOR BUILDING FRAME COLUMN (ALONG COLUMN LINE 1&4) FOUNDATIONS HAVE BEEN DESIGNED FOR 60% OF DOWNWARD & UPLIFT REACTIONS LISTED ABOVE FOR INTERIOR BUILDING FRAME COLUMN FOUNDATIONS

5. ALL STRUCTURAL STEEL & METAL DECK TO BE PRIMED PROPERLY AND FINISH PAINTED PER SPECIFICATION 09 90 00.

- DRAFT -
NOT FOR CONSTRUCTION

No.	Date	DESCRIPTION	GM/SPEC	DWN	CHKD	SUPV	APVD BY
0	12/30/14	SUPPLEMENTAL PRE-FINAL (90%) DESIGN SUBMITTAL		CMW	MSL	JB	RAK

REVISIONS

APPROVED BY
SO
SUPV JB
DSGN MSL
DWN CMW
CHKD MSL
OK RAK
DATE 12/30/14
SCALES NONE or AS SHOWN

TOPOCK GROUNDWATER REMEDIATION PROJECT
WORKSHOP BUILDING
GENERAL NOTES
GAS TRANSMISSION & DISTRIBUTION
PACIFIC GAS AND ELECTRIC COMPANY
SAN FRANCISCO, CALIFORNIA

MICROFILM
BILL OF MATL
DWG LIST
SUP3DS
SUPSD BY
SHEET NO. of SHEETS
S-15-01
REV

ARCADIS

SUBJECT: TOPOK-WORKSHOP BLDG
INTERIOR ROOM CEILING

JOB NO:

BY: MSL DATE: 1/8/15

CHKD: DATE:

PAGE I-35

SHEET 1

CEILING FRAMING

- LIVE LOAD = 50 psf
- DEAD LOAD = 3 psf 3/4" PLYWOOD + 1.78 #/FT METAL DECK + 5 psf MECH/ELEC = 9.78 psf

  TOTAL = 59.8 psf ≈ 60 psf × $\frac{10.33 \text{ FT C/C}}{2}$ = 310 #/FT ROOF LL & DL

  258 #/FT LL (1.0)
  52 #/FT DL (1.0)

- WALL DEAD LOAD = 4 psf × 2 = 8 psf
  1" GYPSUM

  = 8 psf × 10 FT TALL = 80 #/FT DL (1.0)

- SPAN = 11'-0" − (1'-1") + 5" STUD = 10.33 FT C/C
- REF SHT I-36 FOR TSN METAL STUD & JOIST INFORMATION

  ~ USE 600S162-54 (50 KSI) FLOOR JOIST STUDS

  → 6", 54 mil, 1 5/8" FLANGE WIDTH

  → 11'-2" MAX SPAN w/ l/480 DEFLECTION > 10.33 FT C/C SPAN & l/240 REQ'D ✓ OK

Light Steel Framing Members

SSMA Sections

September 2005

I-36

The Steel Network, Inc.

Your Link To The Steel Industry

Load Bearing Studs

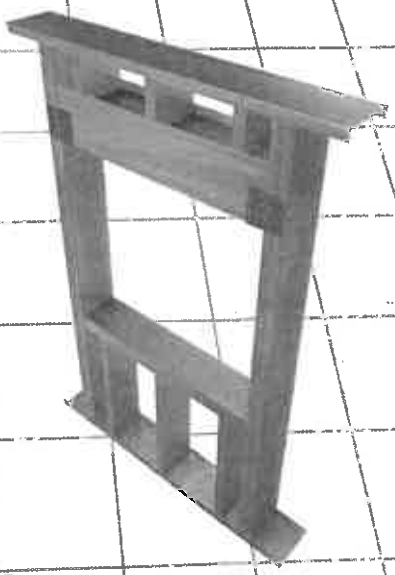

Curtain Wall Studs

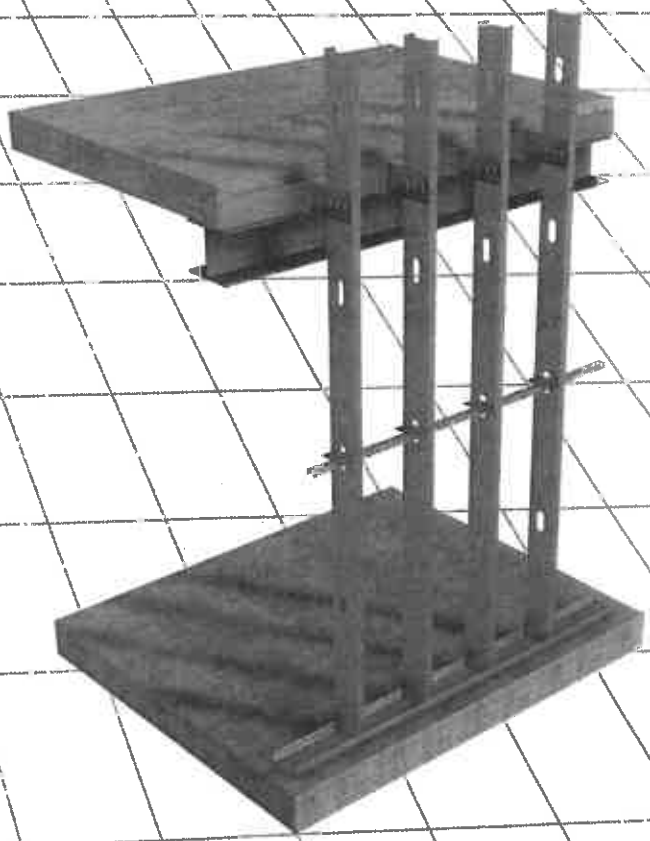

Bridging

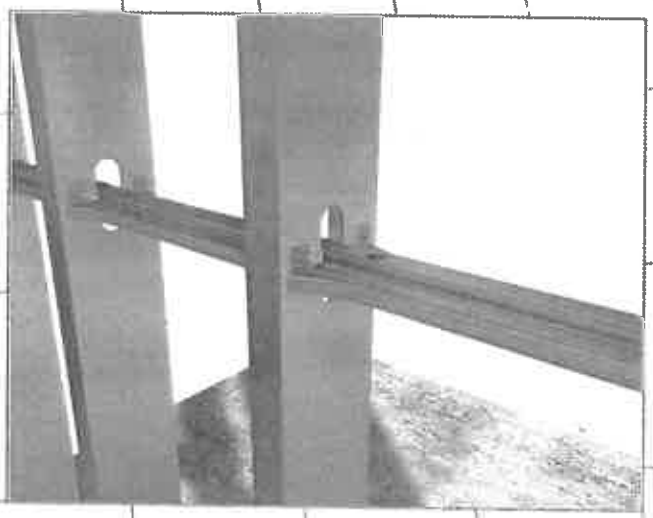

Joist

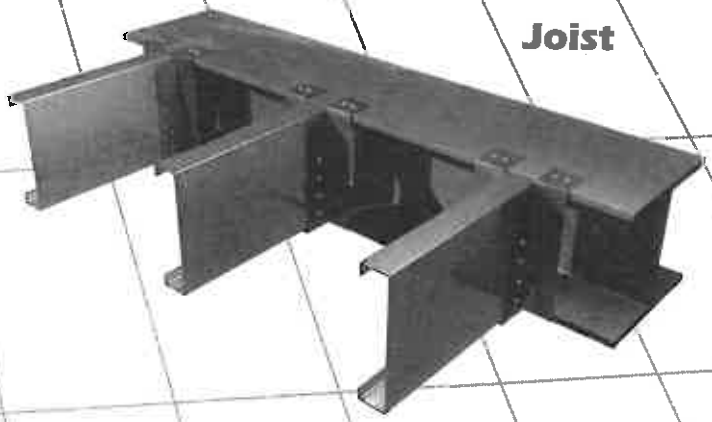

TSN
The Steel Network

www.steelnetwork.com • 888-474-4876

SSMA℠ (S) STUD SECTION

600S162-54

Member Depth:
(Example: 6" = 600 x 1/100 inches)
All member depths are taken in 1/100 inches. For all "T" sections, member depth is inside to inside dimension.

Material Thickness:
(Example: 0.054 in. = 54 mils; 1 mil = 1/1000 in.)
Material thickness is the minimum base metal thickness in mils. Minimum base metal thickness represents 95% of the design thickness.

Flange Width:
(Example: 1 5/8" = 1.625" ≈ 162 x 1/100 inches)
All flange widths are taken in 1/100 inches.

Style:
(Example: Stud or Joist section = S)
The four alpha characters utilized by the designator system are:
S = Stud or Joist Sections
T = Track Sections
U = Channel Sections
F = Furring Channel Sections

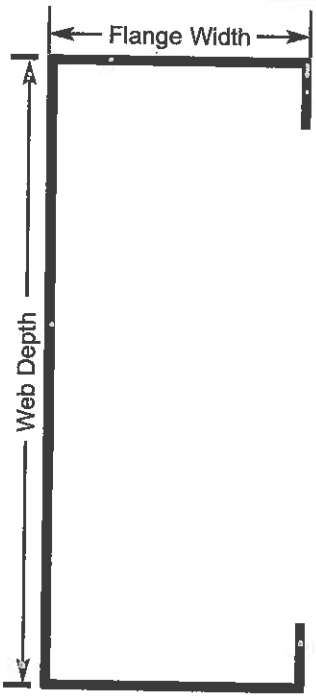

SSMA℠

CODE APPROVAL

Products manufactured by the members recognized by ICC (ICBO) Evaluation Service of the Steel Stud Manufacturers Association (SSMA) comply with the Uniform Building Code. See *ICC ES Legacy Report No. ER-4943P*. The Steel Network, Inc. is a Member Manufacturer of the SSMA.

MATERIAL SPECIFICATIONS

Products manufactured by SSMA members are formed from steel with a minimum yield stress of 33 ksi or 50 ksi. All products listed in this catalog are engineered to meet the 2001 Edition of the American Iron and Steel Institute (AISI) North American *Specification for the Design of Cold-Formed Steel Structural Members*. Material specification meets ASTM Standards A1003 and A653. The structural properties included in this brochure were computed based on Allowable Stress Design to conform with the same AISI standard.

LIGHT STEEL FRAMING VALUE

The increased use of light steel framing as a building component reflects upon its inherent benefits:

- High strength-to-weight ratio
- Lightweight for ease in handling
- Strength allows for longer clear-spans
- Longer clear spans provide design flexibility
- Uses for structural and non-structural applications
- Steel is a recyclable product

The Steel Network, the industry leader for light steel framing connection solutions, also delivers industry standard SSMA members, in addition to SigmaStud®, the revolutionary load bearing wall stud solution.

SigmaStud®
Page 4 Load Bearing Wall Systems Catalog

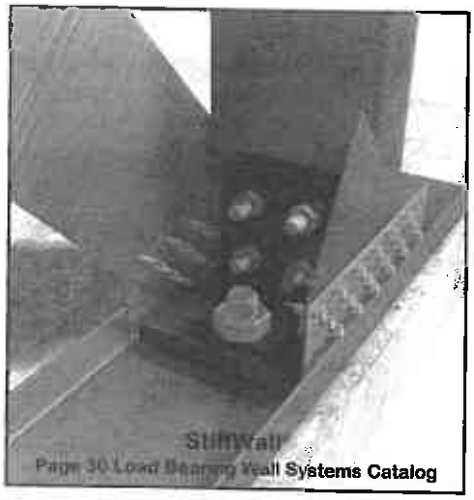
StiffWall
Page 30 Load Bearing Wall Systems Catalog

BuckleBridge
Page 39 Light Steel Framing Members Catalog

AVAILABLE SECTIONS

Members are available in many common web depths. Section properties and allowable load charts begin on page 5.

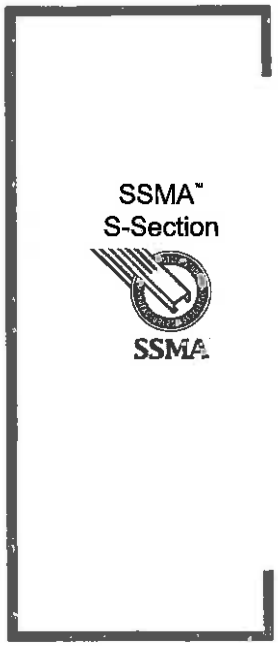

Each section is available in the following minimum delivered thicknesses:
33 mil – 20ga
43 mil – 18ga
54 mil – 16ga
68 mil – 14ga
97 mil – 12ga
118 mil – 10ga

Minimum Thickness[1] (mils)	Design Thickness (in)	Inside Corner Radii (in)	Reference Gauge No.
18	0.0188	0.0843	25
27	0.0283	0.0796	22
30	0.0312	0.0781	20 - Drywall
33	0.0346	0.0764	20 - Structural
43	0.0451	0.0712	18
54	0.0566	0.0849	16
68	0.0713	0.1069	14
97	0.1017	0.1525	12

[1] Minimum Thickness represents 95% of the design thickness and is the minimum acceptable thickness delivered to the job site based on Section A3.4 of the *AISI Specification*.

AVAILABLE STUD/JOIST/TRACK DEPTHS:

162,250, 350, 362, 400, 550, 600, 800, 1000, 1200, 1400, 1600

AVAILABLE FLANGE DEPTHS:

125, 137, 162, 200, 250

Section	Flange Width	Stiffening Lip Length (in)
S125	1.25"	0.188
S137	1.375"	0.375
S162	1.625"	0.500
S200	2"	0.625
S250	2.5"	0.625

General Notes for All Tables

1. The strength increase due to cold-work of forming was incorporated for flexural strength as applicable per *AISI A7.2*.
2. The moment of inertia for deflection is calculated at a stress which results in an effective section modulus such that the stress multiplied by that section modulus is equal to the allowable moment. This follows Procedure 1 of the *AISI Specification*.
3. The yield stress (33ksi or 50ksi) used to calculate the tabulated values are indicated in the tables.
4. When provided, factory punchouts will be located along the centerline of the webs of the members and will have a minimum center-to-center spacing of 24". Punchouts will have a maximum width equal to half the member depth (d/2) or 2 1/2", whichever is less, and a maximum length which equals 4 1/2". The minimum distance between the end of the member and the near edge of the web punchout equals 10".
5. For those steels that have both 33 and 50 ksi listings, if the design is based upon 50ksi, the 50ksi steel needs to be specified by the contractor/purchaser (Example: 362S137-54 [50ksi]).

Symbol Definitions for Section Properties:

Gross Properties:

Ixx: Moment of inertia of the gross section about the X-X axis (strong axis). √
Rx: Radius of gyration of the gross section about the X-X axis.
Iyy: Moment of inertia of the gross section about the Y-Y axis (weak axis). √
Ry: Radius of gyration of the gross section about the Y-Y axis.

Effective Properties:

Ixx: Moment of inertia for deflection calculations based on "Procedure 1 for Deflection Determination" of the 2001 *AISI Specification*.
Sxx: Effective section modulus about the X-X axis (strong axis) Stress = Fy. √
Ma: Allowable Bending Moment - Based on the effective section modulus and the allowable stress including the strength increase from cold-work of forming (*AISI 7.2*) where applicable.
Va: Allowable Shear Load
Ycg: Maximum distance from the outside of the compression flange to the center of gravity of the effective section

Torsional Properties:

J: St. Venant torsional constant.
Cw: Torsional warping constant.
Xo: Distance from the shear center to the centroid along the principal X-axis.
Ro: Polar radius of gyration about the centroidal principal axis.
β: $1 - (Xo/Ro)^2$

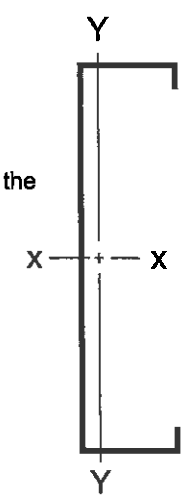

Structural (S) Stud Section Properties

Section	Design Thickness (in)	Gross Area (in²)	Gross Weight (lb/ft)	Gross Ixx (in⁴)	Gross Sxx (in³)	Gross Rx (in)	Gross Iyy (in⁴)	Gross Ry (in)	Effective - 33ksi Ixx (in⁴)	Effective - 33ksi Sxx (in³)	Effective - 33ksi Ma (in-k)	Effective - 33ksi Va (lb)	Effective - 33ksi Ycg (in)	Effective - 50ksi Ixx (in⁴)	Effective - 50ksi Sxx (in³)	Effective - 50ksi Ma (in-k)	Effective - 50ksi Va (lb)	Effective - 50ksi Ycg (in)	Torsional Jx1000 (in⁴)	Torsional Cw (in⁶)	Torsional Xo (in)	Torsional Ro (in)	
250S137-33	0.0346	0.197	0.67	0.203	0.163	1.015	0.052	0.515	0.203	0.156	3.09	1040	1.272						0.079	0.075	-1.170	1.633	0.486
250S137-43	0.0451	0.255	0.87	0.261	0.208	1.010	0.067	0.511	0.261	0.205	4.53	1350	1.260						0.173	0.094	-1.158	1.620	0.489
250S137-54	0.0566	0.316	1.07	0.318	0.255	1.004	0.080	0.504	0.318	0.255	5.76	1656	1.250	0.318	0.244	8.220	2510	1.274	0.337	0.113	-1.150	1.608	0.488
250S137-68	0.0713	0.390	1.33	0.386	0.309	0.994	0.095	0.495	0.386	0.309	7.19	2017	1.250	0.386	0.308	10.65	3057	1.251	0.661	0.134	-1.142	1.593	0.486
250S162-33	0.0346	0.223	0.76	0.335	0.180	1.027	0.080	0.624	0.335	0.160	3.55	1040	1.272						0.089	0.144	-1.501	1.923	[illegible]
250S162-43	0.0451	0.289	0.98	0.392	0.242	1.022	0.111	0.620	0.392	0.240	5.22	1350	1.253						0.196	0.182	-1.489	1.909	0.390
250S162-54	0.0566	0.358	1.22	0.370	0.296	1.016	0.135	0.613	0.370	0.296	6.57	1656	1.250	0.370	0.298	8.42	2510	1.267	0.383	0.219	-1.482	1.894	0.391
250S162-68	0.0713	0.443	1.51	0.450	0.360	1.002	0.162	0.605	0.450	0.360	8.27	2017	1.250	0.450	0.357	12.10	3057	1.258	0.742	0.262	-1.474	1.885	[illegible]
350S162-33	0.0346	0.258	0.88	0.508	0.290	1.404	0.098	0.617	0.508	0.279	6.50	1046	1.779						0.103	0.273	-1.351	2.044	0.563
350S162-43	0.0451	0.334	1.14	0.654	0.374	1.400	0.125	0.612	0.654	0.372	8.08	1777	1.755						0.227	0.345	-1.339	2.031	0.565
350S162-54	0.0566	0.415	1.41	0.804	0.460	1.392	0.152	0.606	0.804	0.460	10.20	2403	1.750	0.804	0.447	13.37	3446	1.773	0.443	0.418	-1.331	2.019	0.566
350S162-68	0.0713	0.515	1.75	0.985	0.563	1.383	0.184	0.597	0.985	0.557	12.83	2959	1.750	0.985	0.557	16.89	4483	1.758	0.872	0.503	-1.321	2.004	0.565
362S137-33	0.0346	0.226	0.80	0.479	0.264	1.424	0.055	0.501	0.479	0.254	5.02	1039	1.842						0.094	0.162	-1.025	1.625	0.594
362S137-43	0.0451	0.306	1.04	0.616	0.340	1.419	0.075	0.497	0.616	0.334	7.38	1777	1.826						0.207	0.204	-1.015	1.614	[illegible]
362S137-54	0.0566	0.379	1.29	0.756	0.417	1.411	0.091	0.490	0.756	0.412	9.43	2497	1.812	0.756	0.450	13.47	3445	1.844	0.405	0.245	-1.006	1.801	[illegible]
362S137-68	0.0713	0.470	1.60	0.922	0.509	1.401	0.109	0.480	0.922	0.509	11.87	3016	1.812	0.922	0.508	17.56	4661	1.814	0.797	0.294	-0.996	1.784	[illegible]
362S162-33	0.0346	0.262	0.89	0.551	0.304	1.450	0.099	0.616	0.551	0.292	5.77	1039	1.843						0.105	0.293	-1.335	2.085	0.582
362S162-43	0.0451	0.340	1.16	0.710	0.392	1.445	0.127	0.610	0.710	0.389	8.46	1777	1.818						0.230	0.371	-1.323	2.052	0.585
362S162-54	0.0566	0.422	1.44	0.873	0.481	1.438	0.154	0.604	0.873	0.481	10.69	2497	1.812	0.873	0.468	14.00	3446	1.836	0.451	0.449	-1.314	2.040	0.585
362S162-68	0.0713	0.524	1.78	1.069	0.590	1.429	0.186	0.596	1.069	0.590	13.44	3076	1.812	1.069	0.584	19.80	4661	1.820	0.887	0.540	-1.305	2.024	0.585
362S200-33	0.0346	0.297	1.01	0.646	0.356	1.476	0.177	0.772	0.643	0.318	6.25	1039	1.888						0.119	0.571	-1.775	2.432	0.473
362S200-43	0.0451	0.385	1.31	0.836	0.461	1.474	0.227	0.767	0.836	0.448	8.85	1777	1.854						0.261	0.720	-1.758	2.419	0.472
362S200-54	0.0566	0.478	1.62	1.030	0.568	1.467	0.272	0.761	1.030	0.568	12.36	2497	1.812	1.030	0.509	15.25	3446	1.898	0.511	0.884	-1.750	2.407	0.471
362S200-68	0.0713	0.593	2.02	1.265	0.698	1.458	0.337	0.753	1.265	0.698	15.54	3026	1.812	1.265	0.673	22.34	4661	1.844	1.006	1.070	-1.741	2.390	0.470
400S137-33	0.0346	0.249	0.85	0.603	0.301	1.556	0.061	0.496	0.603	0.290	5.74	936	2.031						0.099	0.200	-0.987	1.908	0.732
400S137-43	0.0451	0.323	1.10	0.776	0.388	1.551	0.078	0.491	0.776	0.382	8.43	1777	2.014						0.219	0.253	-0.976	1.897	0.735
400S137-54	0.0566	0.401	1.36	0.953	0.477	1.542	0.094	0.484	0.953	0.477	10.78	2777	2.000	0.953	0.457	15.40	3446	2.034	0.428	0.305	-0.967	1.884	0.737
400S137-68	0.0713	0.497	1.69	1.165	0.582	1.531	0.112	0.475	1.165	0.582	13.58	3429	2.000	1.165	0.581	20.10	5196	2.002	0.842	0.365	-0.956	1.866	0.738
400S162-33	0.0346	0.275	0.94	0.692	0.346	1.586	0.103	0.611	0.692	0.332	6.57	936	2.032						0.110	0.358	-1.288	2.133	0.635
400S162-43	0.0451	0.357	1.21	0.892	0.446	1.581	0.131	0.606	0.892	0.441	8.61	1777	2.006						0.242	0.453	-1.276	2.121	0.636
400S162-54	0.0566	0.442	1.51	1.098	0.549	1.574	0.159	0.600	1.098	0.477	10.78	2777	2.000	1.098	0.533	15.98	3446	2.026	0.473	0.590	-1.266	2.108	0.638
400S162-68	0.0713	0.550	1.87	1.346	0.673	1.564	0.192	0.591	1.348	0.673	16.34	3429	2.000	1.346	0.666	22.50	5196	2.009	0.933	0.683	-1.256	2.092	0.639
400S200-33	0.0346	0.310	1.05	0.812	0.406	1.619	0.183	0.769	0.805	0.362	7.16	936	2.091						0.124	0.689	-1.715	2.481	0.522
400S200-43	0.0451	0.402	1.37	1.047	0.524	1.615	0.235	0.764	1.047	0.509	10.06	1777	2.023						0.272	0.876	-1.703	2.468	0.524
400S200-54	0.0566	0.500	1.70	1.292	0.646	1.608	0.287	0.758	1.292	0.646	14.06	2777	2.000	1.292	0.580	17.36	3446	2.091	0.534	1.068	-1.695	2.456	0.524
400S200-68	0.0713	0.622	2.12	1.589	0.795	1.599	0.349	0.750	1.589	0.795	17.68	3429	2.000	1.589	0.766	25.41	5195	2.035	1.054	1.295	-1.686	2.441	0.523
550S162-33	0.0346	0.327	1.11	1.458	0.530	2.112	0.113	0.588	1.458	0.512	10.11	670	2.787						0.135	0.704	-1.134	2.468	0.789
550S162-43	0.0451	0.424	1.44	1.883	0.685	2.107	0.145	0.584	1.883	0.680	14.76	1487	2.751						0.288	0.894	-1.123	2.458	0.791
550S162-54	0.0566	0.528	1.80	2.324	0.845	2.098	0.176	0.577	2.324	0.845	18.78	2709	2.750	2.324	0.821	24.58	2961	2.782	0.564	1.080	-1.114	2.445	0.792
550S162-68	0.0713	0.657	2.24	2.861	1.040	2.086	0.212	0.568	2.861	1.040	23.72	4442	2.750	2.861	1.031	34.04	5468	2.761	1.114	1.316	-1.100	2.427	0.793
600S137-33	0.0346	0.318	1.08	1.582	0.527	2.229	0.069	0.464	1.582	0.510	10.07	612	3.039						0.127	0.493	-0.823	2.421	0.884
600S137-43	0.0451	0.413	1.41	2.042	0.681	2.223	0.087	0.459	2.042	0.670	14.80	1358	3.018						0.280	0.625	-0.313	2.411	0.886
600S137-54	0.0566	0.514	1.75	2.518	0.839	2.213	0.105	0.452	2.518	0.839	18.98	2708	3.000	2.518	0.809	27.23	2708	3.042	0.549	0.757	-0.804	2.398	0.888
600S137-68	0.0713	0.640	2.18	3.094	1.031	2.200	0.125	0.443	3.094	1.031	24.05	4442	3.000	3.094	1.029	35.60	5468	3.002	1.084	0.911	-0.793	2.380	0.889
600S137-97	0.1017	0.889	3.03	4.188	1.396	2.170	0.159	0.422	4.188	1.396	34.48	7372	3.000	4.188	1.396	50.80	11124	3.000	3.066	1.179	-0.770	2.341	0.892
600S162-33	0.0346	0.344	1.17	1.793	0.598	2.282	0.116	0.581	1.793	0.577	11.41	612	3.035						0.137	0.853	-1.097	2.595	0.821
600S162-43	0.0451	0.447	1.52	2.316	0.772	2.276	0.148	0.576	2.316	0.767	16.66	1358	3.007						0.303	1.082	-1.081	2.585	0.825
600S162-54	0.0566	0.588	1.89	2.860	0.953	2.267	0.180	0.570	2.860	0.953	21.17	2708	3.000	2.860	0.927	27.75	2708	3.034	0.549	0.787	-0.804	2.398	0.888
600S162-68	0.0713	0.693	2.36	3.525	1.175	2.255	0.218	0.560	3.525	1.175	28.74	4442	3.000	3.525	1.164	39.46	5468	3.011	1.174	1.595	-1.072	2.572	0.826
600S162-97	0.1017	0.968	3.29	4.797	1.599	2.229	0.280	0.541	4.797	1.599	38.37	7372	3.000	4.797	1.599	56.73	11124	3.000	3.329	2.093	-1.038	2.516	0.830
600S200-33	0.0346	0.379	1.29	2.075	0.692	2.340	0.209	0.743	2.059	0.617	12.20	612	3.135						0.151	1.577	-1.479	2.866	0.734
600S200-43	0.0451	0.492	1.67	2.683	0.894	2.335	0.268	0.739	2.683	0.873	17.24	1358	3.028						0.334	2.012	-1.468	2.855	0.736
600S200-54	0.0566	0.613	2.09	3.319	1.106	2.327	0.328	0.732	3.319	1.106	24.07	2708	3.000	3.319	1.002	30.01	2708	3.117	0.655	2.461	-1.459	2.842	0.737
600S200-68	0.0713	0.764	2.60	4.101	1.367	2.316	0.400	0.723	4.101	1.367	30.42	4442	3.000	4.101	1.317	43.71	5468	3.047	1.295	2.997	-1.448	2.826	0.737
600S200-97	0.1017	1.087	3.63	5.612	1.871	2.293	0.530	0.705	5.612	1.871	43.49	7372	3.000	4.101	1.871	64.53	11124	3.000	3.679	3.981	-1.427	2.791	0.739
600S250-43	0.0451	0.537	1.83	3.082	1.027	2.396	0.456	0.923	3.082	0.918	18.34	1358	3.124						0.364	3.379	-1.896	3.163	0.647
600S250-54	0.0566	0.670	2.28	3.819	1.273	2.388	0.552	0.917	3.819	1.151	22.80	2708	3.115	3.790	1.069	32.00	2708	3.207	0.715	4.188	-1.888	3.150	0.647
600S250-68	0.0713	0.836	2.84	4.727	1.576	2.376	0.686	0.906	4.727	1.522	30.06	4442	3.046	4.727	1.342	40.18	5468	3.191	1.410	5.071	-1.876	3.164	0.647
600S250-97	0.1017	1.160	3.95	6.496	2.165	2.357	0.923	0.889	6.496	2.100	48.88	7372	3.000	6.496	2.093	64.36	11124	3.052	4.030	6.790	-1.861	3.130	0.648

[1] Web-height to thickness ratio exceeds 200. Web stiffeners are required at all support points and concentrated loads.
Gross properties are based on full-unreduced cross section, away from punchouts.

Raleigh, NC : Phone (919) 845-1025
Las Vegas, NV : Phone (702) 643-4330
Toll Free Nationwide Phone (888) 474-4876
www.steelnetwork.com

I-38

COMBINED AXIAL AND LATERAL LOAD TABLE NOTES

- Allowable loads are based on specified weak axis and torsional bracing at 48" o.c. maximum for axial load calculation and continuous support of each flange for flexural calculation.
- Sections are punched with a standard punchout 1.5" wide, located on the centerline of the web 24" o.c.
- Allowable loads are based on a punched section for axial load calculation, and an unpunched section for flexural calculation as per *ICC-ES AC46-Appendix B.*
- Weak axis and torsional bracing should have sufficient stiffness and strength to resist axial load.
- Lateral load is multiplied by 0.75 for strength determination and by 0.70 for deflection determination. Axial load is not multiplied by any factor (Load factor = 1.0)
- Strength increase due to cold forming is incorporated in calculating allowable loads as per *AISI Specification Sec. A7.2.*
- Check lateral end reactions for web crippling if applicable.
- Loads in tables are in kips/stud.

TABLE BACKGROUND AND EXAMPLE

1. Basis for Tables:

The combined axial and lateral load tables in this catalog cover the following basic load combinations for the Allowable Stress Design (ASD) Method (IBC2003 and ASCE 7-02):

- D + L (Strength determination)
- D + 0.75L + 0.75W_{MWFRS}* (Strength determination)
- 0.70$W_{C\&C}$** (Deflection determination)

* MWFRS: Main Wind Force Resisting System
** C&C: Component and Cladding

2. Design Example:

Given:

Service (Un-factored) Loads:

Axial Dead Load	= ~~1.6 kips~~ 0.204K
Axial Live Load	= ~~3.2 kips~~ 0.359K
Wind Pressure (MWFRS)	= ~~30~~ psf 15 psf
Wind Pressure (C&C)	= ~~40~~ psf 15 psf
Wall Width	= ~~6.0"~~ 4"
Stud Height	= ~~12.0 ft.~~ 10 ft
Stud Spacing	= 16" o.c. ✓
Specified Deflection Limit	= L/600 ✓

Bridging (Lateral Bracing) at maximum vertical spacing of 48" o.c. ✓

Calculations:

a) Use the D + L load combination to get the first estimate of the stud.

Combination total axial load = ~~1.6 + 3.2~~
= ~~4.8 kips~~ 0.563K

From the "No Lateral Load" table with a ~~12.0'~~ 10' wall height, choose ~~600~~S162-~~54~~ (~~50~~ksi) with an axial resistance of ~~5.62~~ 2.64K kips > ~~4.8~~ 0.563K kips OK ✓ 362 43 33

b) Check the D + 0.75L + 0.75W_{MWFRS} load combination for strength.

Combination total axial load = ~~1.6 + 0.75(3.2)~~
= ~~4.0 kips~~ 0.473K

Go to the "Lateral Load = ~~30~~ 15 psf" table with a ~~12.0'~~ 10' wall height and 16" stud spacing. The axial resistance for ~~600~~S162-~~54~~ (~~50~~ksi) is ~~4.44~~ 1.73K kips > ~~4.0~~ 0.473K kips OK ✓ 362 43 33

c) Check the 0.70$W_{C\&C}$ load combination for deflection. The specified limit is L/600.

Go to the "Lateral Load = ~~40~~ 15 psf" table with a ~~12.0'~~ 10' wall height and 16" stud spacing. The deflection parameter for 600S162-54 (50ksi) is ~~X~~ Nothing which means that deflection ~~exceeds~~ is less than L/720 < L/600 OK ✓

Conclusion: 362 43 33

Use ~~600~~S162-54 (50ksi) (with design thickness = 0.0566" and Fy = 50 ksi) spaced at 16" o.c. with 2 lines of bridging arranged so that the maximum spacing does not exceed 48" (4 ft.). ✓

3. Extra Design Considerations:

a) Check lateral end reaction of the stud for web crippling using the Web Crippling Load Tables included in this catalog.

b) If the specified axial dead load acting on the stud is significantly larger than the specified axial live load, the following extra basic load combination needs to be checked as well:

- D + $W_{C\&C}$ (Strength determination)

There are no special tables for this load combination. However, you can still use the same tables by scaling up the $W_{C\&C}$ wind pressure value (use the table that corresponds to the scaled-up wind pressure) and then compare the table's axial resistance to the specified dead load.

NO LATERAL LOAD FOR LOAD COMBINATION 1.0(D+L)

Wall Height (ft.)	Spacing (in.) o.c.	350S162-(mils)				362S137-(mils)				362S162-(mils)				362SG200-(mils)			
		33 ksi		50 ksi		33 ksi		50 ksi		33 ksi		50 ksi		33 ksi		50 ksi	
		33	43	54	68	33	43	54	68	33	43	54	68	33	43	54	68
8	12	2.03	2.76	4.11	5.19	1.67	2.31	3.39	4.41	2.08	2.85	4.26	5.50	2.49	3.51	5.34	6.87
	16	2.03	2.76	4.11	5.19	1.67	2.31	3.39	4.41	2.08	2.85	4.26	5.50	2.49	3.51	5.34	6.87
	24	2.03	2.76	4.11	5.19	1.67	2.31	3.39	4.41	2.08	2.85	4.26	5.50	2.49	3.51	5.34	6.87
9	12	1.95	2.66	3.84	4.84	1.63	2.25	3.25	4.17	2.01	2.75	4.04	5.16	2.41	3.37	5.03	6.41
	16	1.95	2.66	3.84	4.84	1.63	2.25	3.25	4.17	2.01	2.75	4.04	5.16	2.41	3.37	5.03	6.41
	24	1.95	2.66	3.84	4.84	1.63	2.25	3.25	4.17	2.01	2.75	4.04	5.16	2.41	3.37	5.03	6.41
10	12	1.87	2.54	3.53	4.43	1.57	2.17	3.05	3.89	1.93	2.64	3.79	4.77	2.32	3.22	4.68	5.90
	16	1.87	2.54	3.53	4.43	1.57	2.17	3.05	3.89	1.93	2.64	3.79	4.77	2.32	3.22	4.68	5.90
	24	1.87	2.54	3.53	4.43	1.57	2.17	3.05	3.89	1.93	2.64	3.79	4.77	2.32	3.22	4.68	5.90
12	12	1.66	2.26	2.93	3.65	1.43	1.97	2.61	3.30	1.74	2.37	3.17	3.95	2.12	2.88	3.90	4.84
	16	1.66	2.26	2.93	3.65	1.43	1.97	2.61	3.30	1.74	2.37	3.17	3.95	2.12	2.88	3.90	4.84
	24	1.66	2.26	2.93	3.65	1.43	1.97	2.61	3.30	1.74	2.37	3.17	3.95	2.12	2.88	3.90	4.84
14	12	1.44	1.94	2.41	2.98	1.26	1.74	2.19	2.73	1.52	2.07	2.61	3.24	1.85	2.50	3.18	3.93
	16	1.44	1.94	2.41	2.98	1.26	1.74	2.19	2.73	1.52	2.07	2.61	3.24	1.85	2.50	3.18	3.93
	24	1.44	1.94	2.41	2.98	1.26	1.74	2.19	2.73	1.52	2.07	2.61	3.24	1.85	2.50	3.18	3.93
16	12	1.21	1.60	1.98	2.45	1.08	1.47	1.82	2.25	1.29	1.74	2.16	2.66	1.57	2.11	2.61	3.22
	16	1.21	1.60	1.98	2.45	1.08	1.47	1.82	2.25	1.29	1.74	2.16	2.66	1.57	2.11	2.61	3.22
	24	1.21	1.60	1.98	2.45	1.08	1.47	1.82	2.25	1.29	1.74	2.16	2.66	1.57	2.11	2.61	3.22

NO LATERAL LOAD FOR LOAD COMBINATION 1.0(D+L)

Wall Height (ft.)	Spacing (in.) o.c.	400S137-(mils)				400S162-(mils)				400S200-(mils)				550S162-(mils)			
		33 ksi		50 ksi		33 ksi		50 ksi		33 ksi		50 ksi		33 ksi		50 ksi	
		33	43	54	68	33	43	54	68	33	43	54	68	33	43	54	68
8	12	1.78	2.47	3.73	5.02	2.22	3.05	4.72	6.23	2.63	3.76	5.92	7.72	2.52	3.48	5.70	7.59
	16	1.78	2.47	3.73	5.02	2.22	3.05	4.72	6.23	2.63	3.76	5.92	7.72	2.52	3.48	5.70	7.59
	24	1.78	2.47	3.73	5.02	2.22	3.05	4.72	6.23	2.63	3.76	5.92	7.72	2.52	3.48	5.70	7.59
9	12	1.74	2.42	3.61	4.89	2.17	2.97	4.53	5.98	2.57	3.65	5.65	7.36	2.50	3.46	5.63	7.53
	16	1.74	2.42	3.61	4.89	2.17	2.97	4.53	5.98	2.57	3.65	5.65	7.36	2.50	3.46	5.63	7.53
	24	1.74	2.42	3.61	4.89	2.17	2.97	4.53	5.98	2.57	3.65	5.65	7.36	2.50	3.46	5.63	7.53
10	12	1.70	2.36	3.48	4.66	2.10	2.88	4.32	5.68	2.49	3.52	5.35	6.96	2.47	3.42	5.54	7.41
	16	1.70	2.36	3.48	4.66	2.10	2.88	4.32	5.68	2.49	3.52	5.35	6.96	2.47	3.42	5.54	7.41
	24	1.70	2.36	3.48	4.66	2.10	2.88	4.32	5.68	2.49	3.52	5.35	6.96	2.47	3.42	5.54	7.41
12	12	1.59	2.21	3.11	4.06	1.93	2.65	3.81	4.93	2.32	3.22	4.66	6.03	2.40	3.32	5.30	7.08
	16	1.59	2.21	3.11	4.06	1.93	2.65	3.81	4.93	2.32	3.22	4.66	6.03	2.40	3.32	5.30	7.08
	24	1.59	2.21	3.11	4.06	1.93	2.65	3.81	4.93	2.32	3.22	4.66	6.03	2.40	3.32	5.30	7.08
14	12	1.44	2.00	2.70	3.43	1.74	2.38	3.23	4.08	2.11	2.88	3.92	4.95	2.29	3.17	4.95	6.61
	16	1.44	2.00	2.70	3.43	1.74	2.38	3.23	4.08	2.11	2.88	3.92	4.95	2.29	3.17	4.95	6.61
	24	1.44	2.00	2.70	3.43	1.74	2.38	3.23	4.08	2.11	2.88	3.92	4.95	2.29	3.17	4.95	6.61
16	12	1.27	1.76	2.30	2.86	1.52	2.09	2.73	3.37	1.85	2.51	3.28	4.07	2.15	2.98	4.50	6.02
	16	1.27	1.76	2.30	2.86	1.52	2.09	2.73	3.37	1.85	2.51	3.28	4.07	2.15	2.98	4.50	6.02
	24	1.27	1.76	2.30	2.86	1.52	2.09	2.73	3.37	1.85	2.51	3.28	4.07	2.15	2.98	4.50	6.02

1 = Deflection Exceeds L/120
2 = Deflection Exceeds L/240
3 = Deflection Exceeds L/360
6 = Deflection Exceeds L/600
7 = Deflection Exceeds L/720
If not noted, deflection is less than L/720

Important Notes:

- Allowable loads are based on specified weak axis and torsional bracing at 48" o.c. maximum for axial load calculation and continuous support of each flange for flexural calculation.
- Sections are punched with a standard punchout 1.5" wide, located on the centerline of the web 24" o.c.
- Allowable loads are based on a punched section for axial load calculation, and an unpunched section for flexural calculation as per *ICC-ES AC46-Appendix B*.
- Weak axis and torsional bracing should have sufficient stiffness and strength to resist axial load.
- Lateral load is multiplied by 0.75 for strength determination and by 0.70 for deflection determination. Axial load is not multiplied by any factor (Load factor = 1.0)
- Strength increase due to cold forming is incorporated in calculating allowable loads as per *AISI Specification Sec. A7.2.*
- Check lateral end reactions for web crippling if applicable.
- Loads in tables are in kips/stud.

LATERAL LOAD = 15 PSF (MULTIPLIED BY 0.75 FOR STRENGTH & BY 0.70 FOR DEFLECTION DETERMINATIONS)

Wall Height (ft.)	Spacing (in.) o.c.	350S162-(mils)				362S137-(mils)				362S162-(mils)				362S200-(mils)			
		33 ksi		50 ksi		33 ksi		50 ksi		33 ksi		50 ksi		33 ksi		50 ksi	
		33	43	54	68	33	43	54	68	33	43	54	68	33	43	54	68
8	12	1.55	2.30	3.71	4.78	1.29	1.90	3.05	4.04	1.62	2.39	3.87	5.09	1.98	2.97	4.86	6.41
	16	1.40	2.15	3.58	4.64	1.18	1.77	2.94	3.92	1.47	2.25	3.74	4.95	1.81	2.80	4.70	6.26
	24	1.12	1.87	3.33	4.39	0.95[7]	1.52	2.72	3.69	1.20	1.97	3.50	4.69	1.51	2.48	4.41	5.98
9	12	1.36	2.07	3.34	4.32	1.15	1.73	2.81	3.71	1.43	2.17	3.54	4.64	1.76	2.70	4.42	5.83
	16	1.18	1.89	3.19	4.16	1.01	1.57	2.67	3.58	1.26	2.00	3.39	4.47	1.57	2.49	4.23	5.65
	24	0.86[7]	1.56	2.89	3.85	0.74[7]	1.27	2.41	3.28	0.93[7]	1.67	3.09	4.16	1.20[7]	2.10	3.87	5.30
10	12	1.15	1.83	2.94	3.82	1.00[7]	1.53	2.52	3.33	1.23	1.93	3.18	4.14	1.54	2.40	3.95	5.21
	16	0.96[6]	1.62	2.77	3.64	0.83[6]	1.35[7]	2.36	3.16	1.03[7]	1.73	3.00	3.95	1.31	2.16	3.73	5.00
	24	0.60[6]	1.25[6]	2.44[7]	3.29	0.53[6]	1.01[6]	2.06[6]	2.84[7]	0.67[6]	1.35[6]	2.66[7]	3.60	0.90[6]	1.72[7]	3.32	4.61
12	12	0.76[1]	1.33[1]	2.26[1]	2.89[1]	0.66[1]	1.12[1]	1.93[1]	2.57[1]	0.84[1]	1.44[1]	2.41[1]	3.16[1]	1.06[1]	1.79[1]	2.98[1]	3.97[1]
	16	0.54[1]	1.09[1]	2.00[1]	2.68[1]	0.49[1]	0.90[1]	1.74[1]	2.37[1]	0.61[1]	1.20[1]	2.20[1]	2.94[1]	0.82[1]	1.51[1]	2.73[1]	3.73[1]
	24	0.15[1]	0.67[1]	1.64[1]	2.30[1]	0.15[1]	0.51[1]	1.40[1]	2.00[1]	0.21[1]	0.77[1]	1.83[1]	2.54[1]	0.36[1]	1.01[1]	2.28[1]	3.29[1]
14	12	0.43[1]	0.89[3]	1.59[6]	2.13[6]	0.40[1]	0.75[3]	1.41[6]	1.91[6]	0.49[2]	0.99[6]	1.76[6]	2.35[6]	0.67[1]	1.24[6]	2.16[6]	2.97[7]
	16	0.21[1]	0.65[3]	1.39[2]	1.92[6]	0.20[2]	0.52[3]	1.21[3]	1.70[6]	0.26[2]	0.74[3]	1.55[4]	2.12[6]	0.40[1]	0.95[3]	1.91[6]	2.71[6]
	24		0.23[2]	1.03[2]	1.53[3]		0.12[2]	0.87[2]	1.33[3]		0.30[2]	1.17[2]	1.72[3]		0.45[2]	1.47[3]	2.27[3]
16	12	0.18[1]	0.54[1]	1.14[1]	1.56[1]	0.18	0.44[1]	1.00[1]	1.39[1]	0.23	0.62[1]	1.27[1]	1.73[1]	0.35[1]	0.80[1]	1.58[1]	2.21[1]
	16		0.31[1]	0.94[1]	1.36[1]		0.22[1]	0.81[1]	1.19[1]		0.38[1]	1.06[1]	1.51[1]	0.09[1]	0.52[1]	1.31[1]	1.96[1]
	24			0.60[1]	0.98[1]			0.48[1]	0.83[1]			0.70[1]	1.12[1]		0.04[1]	0.89[1]	1.53[1]

LATERAL LOAD = 15 PSF (MULTIPLIED BY 0.75 FOR STRENGTH & BY 0.70 FOR DEFLECTION DETERMINATIONS)

Wall Height (ft.)	Spacing (in.) o.c.	400S137-(mils)				400S162-(mils)				400S200-(mils)				550S162-(mils)			
		33 ksi		50 ksi		33 ksi		50 ksi		33 ksi		50 ksi		33 ksi		50 ksi	
		33	43	54	68	33	43	54	68	33	43	54	68	33	43	54	68
8	12	1.43	2.10	3.41	4.66	1.80	2.63	4.35	5.83	2.17	3.27	5.47	7.28	2.23	3.20	5.44	7.31
	16	1.32	1.98	3.30	4.54	1.66	2.50	4.23	5.70	2.02	3.11	5.32	7.14	2.13	3.10	5.35	7.22
	24	1.11	1.74	3.10	4.32	1.40	2.24	3.99	5.44	1.73	2.81	5.03	6.87	1.94	2.92	5.18	7.04
9	12	1.31	1.94	3.20	4.43	1.63	2.44	4.06	5.46	1.98	3.02	5.07	6.80	2.12	3.09	5.29	7.17
	16	1.17	1.79	3.07	4.28	1.46	2.28	3.91	5.30	1.79	2.83	4.89	6.62	2.00	2.97	5.18	7.05
	24	0.91[7]	1.51	2.82	3.99	1.15[7]	1.96	3.62	4.96	1.45	2.46	4.54	6.27	1.76	2.73	4.97	6.81
10	12	1.16	1.77	2.96	4.08	1.44	2.22	3.73	5.04	1.77	2.75	4.63	6.26	2.01	2.96	5.12	6.95
	16	1.00[7]	1.59	2.80	3.90	1.25	2.03	3.55	4.84	1.55	2.52	4.42	6.04	1.86	2.81	4.98	6.80
	24	0.71[6]	1.25[6]	2.50[7]	3.56	0.89[6]	1.66[7]	3.21	4.46	1.15[7]	2.09	4.01	5.63	1.57	2.52	4.71	6.50
12	12	0.88[1]	1.38[1]	2.40[1]	3.28[1]	1.05[1]	1.75[1]	3.01[1]	4.05[1]	1.32[1]	2.16[1]	3.70[1]	5.07[1]	1.72[1]	2.65[1]	4.67[1]	6.39[1]
	16	0.69[1]	1.15[1]	2.20[1]	3.05[1]	0.82[1]	1.50[1]	2.78[1]	3.80[1]	1.08[1]	1.88[1]	3.43[1]	4.80[1]	1.52[1]	2.44[1]	4.47[1]	6.16[1]
	24	0.31[1]	0.75[1]	1.83[1]	2.65[1]	0.40[1]	1.06[1]	2.37[1]	3.35[1]	0.59[1]	1.36[1]	2.94[1]	4.30[1]	1.13[1]	2.04[1]	4.09[1]	5.74[1]
14	12	0.56[1]	0.99[6]	1.84[6]	2.51[7]	0.69[1]	1.28[6]	2.29[6]	3.08	0.90[3]	1.59[6]	2.80[7]	3.85	1.40	2.26	4.09	5.65
	16	0.35[1]	0.74[3]	1.62[6]	2.27[6]	0.44[1]	1.01[6]	2.05[6]	2.81[6]	0.62[2]	1.28[6]	2.51[6]	3.56[7]	1.14[6]	2.00	3.83	5.36
	24		0.31[2]	1.23[3]	1.84[3]		0.53[3]	1.62[3]	2.34[3]	0.12[2]	0.73[3]	2.00[3]	3.05[6]	0.67[6]	1.50[6]	3.35[7]	4.82
16	12	0.31[1]	0.64[1]	1.36[1]	1.87[1]	0.38[1]	0.87[1]	1.70[1]	2.30[1]	0.54[1]	1.10[1]	2.08[1]	2.90[1]	1.06[1]	1.85[1]	3.44[1]	4.80[1]
	18	0.09[1]	0.39[1]	1.14[1]	1.63[1]	0.13[1]	0.60[1]	1.46[1]	2.04[1]	0.25[1]	0.78[1]	1.79[1]	2.62[1]	0.77[1]	1.54[1]	3.14[1]	4.46[1]
	24			0.76[1]	1.21[1]		0.13[1]	1.04[1]	1.59[1]		0.24[1]	1.30[1]	2.12[1]	0.25[1]	0.98[1]	2.60[1]	3.84[1]

1 = Deflection Exceeds L/120
2 = Deflection Exceeds L/240
3 = Deflection Exceeds L/360
6 = Deflection Exceeds L/600
7 = Deflection Exceeds L/720
If not noted, deflection is less than L/720

Important Notes:

- Allowable loads are based on specified weak axis and torsional bracing at 48" o.c. maximum for axial load calculation and continuous support of each flange for flexural calculation.
- Sections are punched with a standard punchout 1.5" wide, located on the centerline of the web 24" o.c.
- Allowable loads are based on a punched section for axial load calculation, and an unpunched section for flexural calculation as per *ICC-ES AC46-Appendix B*.
- Weak axis and torsional bracing should have sufficient stiffness and strength to resist axial load.
- Lateral load is multiplied by 0.75 for strength determination and by 0.70 for deflection determination. Axial load is not multiplied by any factor (Load factor = 1.0)
- Strength increase due to cold forming is incorporated in calculating allowable loads as per *AISI Specification Sec. A7.2*.
- Check lateral end reactions for web crippling if applicable.
- Loads in tables are in kips/stud.

LATERAL LOAD = 15 PSF (MULTIPLIED BY 0.75 FOR STRENGTH & BY 0.70 FOR DEFLECTION DETERMINATIONS)

Wall Height (ft.)	Spacing (in.) o.c.	600S137-(mils)					600S162-(mils)					600S200-(mils)				
		33 ksi		50 ksi			33 ksi		50 ksi			33 ksi		50 ksi		
		33	43	54	68	97	33	43	54	68	97	33	43	54	68	97
8	12	1.65	2.38	3.72	4.95	7.45	2.30	3.27	5.50	7.32	11.25	2.71	4.13	7.24	9.70	15.18
	16	1.58	2.31	3.65	4.88	7.39	2.21	3.19	5.43	7.25	11.17	2.61	4.03	7.15	9.61	15.07
	24	1.43	2.15	3.53	4.75	7.27	2.04	3.02	5.28	7.09	10.99	2.43	3.83	6.96	9.42	14.86
9	12	1.58	2.32	3.66	4.89	7.40	2.22	3.20	5.43	7.25	11.17	2.61	4.01	7.08	9.49	14.88
	16	1.49	2.21	3.58	4.80	7.32	2.11	3.09	5.34	7.15	11.06	2.49	3.88	6.94	9.37	14.74
	24	1.30	2.02	3.41	4.63	7.16	1.90	2.88	5.15	6.94	10.83	2.25	3.63	6.69	9.13	14.47
10	12	1.51	2.24	3.59	4.82	7.33	2.12	3.10	5.35	7.16	11.07	2.49	3.86	6.84	9.23	14.51
	16	1.39	2.11	3.49	4.71	7.23	1.98	2.97	5.23	7.03	10.92	2.34	3.70	6.69	9.08	14.34
	24	1.16	1.87	3.29	4.50	7.02	1.72	2.71	4.99	6.77	10.63	2.05	3.39	6.38	8.78	14.00
12	12	1.34	2.05	3.43	4.64	7.16	1.87	2.83	5.00	6.84	10.80	2.22	3.51	6.28	8.56	13.55
	16	1.16	1.87	3.27	4.48	7.00	1.66	2.64	4.82	6.64	10.57	2.01	3.26	6.06	8.34	13.29
	24	0.83[1]	1.52	2.97	4.17	6.69	1.32	2.28	4.47	6.26	10.12	1.61	2.85	5.63	7.91	12.79
14	12	1.12	1.82	3.21	4.41	6.92	1.58	2.50	4.52	6.23	10.14	1.89	3.08	5.59	7.71	12.29
	16	0.90[1]	1.57	3.00	4.18	6.69	1.34	2.25	4.28	5.96	9.81	1.62	2.78	5.29	7.42	11.94
	24	0.47[6]	1.12[8]	2.59[7]	3.75	6.26	0.89[6]	1.78[7]	3.82	5.45	9.19	1.12[6]	2.23	4.74	6.85	11.26
16	12	0.58[1]	1.55	2.95	4.11	6.60	1.26[1]	2.12	3.83	5.47	8.97	1.53	2.60	4.80	6.73	10.81
	16	0.51[1]	1.24[1]	2.67[1]	3.81	6.28	0.98[1]	1.82[1]	3.64	5.14	8.66	1.21[1]	2.25	4.45	6.37	10.37
	24	0.11[1]	0.69[1]	2.16[1]	3.25[1]	5.70	0.46[1]	1.27[1]	3.10[1]	4.53	7.80	0.84[1]	1.81[1]	3.81[1]	5.70	9.56

LATERAL LOAD = 15 PSF (MULTIPLIED BY 0.75 FOR STRENGTH & BY 0.70 FOR DEFLECTION DETERMINATIONS)

Wall Height (ft.)	Spacing (in.) o.c.	600S250-(mils)					800S137-(mils)					800S162-(mils)				
		33ksi		50 ksi			33 ksi		50 ksi			33 ksi		50 ksi		
		43	54	68	97		33	43	54	68	97	33	43	54	68	97
8	12	4.58	8.10	11.52	17.84		1.64	2.35	3.51	4.68	7.18	2.29	3.25	5.35	7.16	11.19
	16	4.48	8.00	11.41	17.73		1.59	2.29	3.47	4.64	7.14	2.23	3.19	5.30	7.10	11.14
	24	4.27	7.80	11.19	17.52		1.48	2.19	3.39	4.56	7.07	2.10	3.06	5.19	6.99	11.03
9	12	4.45	7.90	11.23	17.45		1.59	2.30	3.47	4.66	7.15	2.24	3.20	5.31	7.11	11.14
	16	4.32	7.77	11.08	17.31		1.53	2.24	3.42	4.60	7.10	2.16	3.12	5.24	7.04	11.07
	24	4.06	7.52	10.80	17.03		1.40	2.10	3.32	4.49	7.01	1.99	2.96	5.09	6.90	10.94
10	12	4.30	7.67	10.88	16.98		1.55	2.25	3.44	4.61	7.11	2.18	3.14	5.25	7.06	11.09
	16	4.14	7.51	10.70	16.80		1.46	2.17	3.37	4.54	7.05	2.07	3.04	5.16	6.97	11.00
	24	3.82	7.19	10.35	16.45		1.30	2.01	3.24	4.41	6.94	1.87	2.84	4.99	6.79	10.84
12	12	3.94	7.10	10.03	15.79		1.43	2.14	3.34	4.51	7.02	2.03	2.99	5.12	6.92	10.96
	16	3.71	6.87	9.77	15.53		1.31	2.02	3.25	4.42	6.94	1.88	2.84	4.99	6.79	10.83
	24	3.26	6.41	9.26	15.01		1.06	1.78	3.06	4.22	6.77	1.58	2.55	4.73	6.52	10.58
14	12	3.51	6.41	8.99	14.32		1.29	1.99	3.23	4.39	6.92	1.85	2.81	4.95	6.75	10.79
	16	3.20	6.10	8.64	13.95		1.13	1.83	3.09	4.26	6.79	1.65	2.61	4.77	6.56	10.61
	24	2.62	5.50	7.98	13.25		0.82	1.51	2.83	3.99	6.55	1.25	2.21	4.41	6.18	10.25
16	12	3.02	5.64	7.85	12.84		1.13	1.83	3.09	4.25	6.78	1.64	2.60	4.75	6.52	10.57
	18	2.65	5.26	7.41	12.18		0.93	1.61	2.91	4.07	6.62	1.38	2.33	4.50	6.27	10.32
	24	1.96[1]	4.55[1]	6.63	11.33		0.53[1]	1.20	2.57	3.71	6.29	0.88[1]	1.82	4.03	5.77	9.82

1 = Deflection Exceeds L/120
2 = Deflection Exceeds L/240
3 = Deflection Exceeds L/360
6 = Deflection Exceeds L/600
7 = Deflection Exceeds L/720
If not noted, deflection is less than L/720

Important Notes:

- Allowable loads are based on specified weak axis and torsional bracing at 48" o.c. maximum for axial load calculation and continuous support of each flange for flexural calculation.
- Sections are punched with a standard punchout 1.5" wide, located on the centerline of the web 24" o.c.
- Allowable loads are based on a punched section for axial load calculation, and an unpunched section for flexural calculation as per *ICC-ES AC46-Appendix B.*
- Weak axis and torsional bracing should have sufficient stiffness and strength to resist axial load.
- Lateral load is multiplied by 0.75 for strength determination and by 0.70 for deflection determination. Axial load is not multiplied by any factor (Load factor = 1.0)
- Strength increase due to cold forming is incorporated in calculating allowable loads as per *AISI Specification Sec. A7.2.*
- Check lateral end reactions for web crippling if applicable.
- Loads in tables are in kips/stud.

LATERAL LOAD = 15 PSF (X 0.75 FOR STRENGTH & BY 0.70 FOR DEFLECTION DETERMINATIONS)

Wall Height (ft.)	Spacing (in.) o.c.	800S200-(mils) 33 ksi 33	43	54	68	97	800S250-(mils) 33 ksi 43	54	68	97
		50 ksi 33	43	54	68	97	50 ksi 43	54	68	97
8	12	2.86	4.38	7.66	10.20	15.87	4.90	8.76	12.54	19.75
	16	2.78	4.31	7.60	10.14	15.81	4.83	8.69	12.46	19.67
	24	2.64	4.18	7.47	10.02	15.67	4.69	8.55	12.31	19.52
9	12	2.80	4.32	7.61	10.15	15.82	4.83	8.66	12.41	19.57
	16	2.70	4.24	7.52	10.07	15.73	4.74	8.57	12.32	19.47
	24	2.52	4.06	7.35	9.91	15.56	4.55	8.39	12.12	19.28
10	12	2.73	4.26	7.54	10.09	15.75	4.74	8.54	12.27	19.34
	16	2.61	4.15	7.44	9.99	15.64	4.62	8.43	12.15	19.22
	24	2.39	3.94	7.24	9.79	15.42	4.40	8.21	11.90	18.98
12	12	2.56	4.10	7.38	9.93	15.57	4.52	8.23	11.89	18.75
	16	2.40	3.94	7.23	9.78	15.40	4.36	8.07	11.71	18.57
	24	2.07	3.63	6.93	9.49	15.07	4.03	7.74	11.35	18.21
14	12	2.33	3.84	7.02	9.57	15.29	4.25	7.82	11.29	17.92
	16	2.11	3.62	6.81	9.36	15.05	4.02	7.59	11.04	17.67
	24	1.68	3.20	6.40	8.95	14.57	3.58	7.15	10.55	17.17
16	12	2.07	3.52	6.54	8.99	14.46	3.92	7.30	10.52	16.85
	16	1.79	3.25	6.26	8.72	14.14	3.62	7.00	10.19	16.52
	24	1.25	2.72	5.73	8.18	13.51	3.06	6.44	9.55	15.86

LATERAL LOAD = 20 PSF

Wall Height (ft.)	Spacing (in.) o.c.	350S162-(mils) 33 ksi 33	43	54	68	362S137-(mils) 33 ksi 33	43	54	68
		50 ksi 33	43	54	68	50 ksi 33	43	54	68
8	12	1.40	2.15	3.58	4.64	1.18	1.77	2.94	3.92
	16	1.21	1.96	3.42	4.47	1.03	1.60	2.79	3.77
	24	0.86[6]	1.60[7]	3.10	4.14	0.74[6]	1.29[7]	2.52	3.47
9	12	1.18	1.89	3.19	4.16	1.01	1.57	2.67	3.56
	16	0.96[7]	1.67	2.99	3.95	0.83[7]	1.36	2.49	3.37
	24	0.56[7]	1.25[7]	2.62[7]	3.56	0.49[7]	0.99[7]	2.16[7]	3.02[7]
10	12	0.96[6]	1.62	2.77	3.64	0.83[6]	1.35[7]	2.36	3.16
	16	0.71[6]	1.37[6]	2.55[7]	3.40	0.63[6]	1.12[6]	2.16[7]	2.94
	24	0.27[3]	0.91[6]	2.14[3]	2.97[3]	0.26[2]	0.69[3]	1.79[6]	2.54[6]
12	12	0.54[1]	1.09[2]	2.00[1]	2.68	0.49[1]	0.90[1]	1.74	2.37[1]
	16	0.27[1]	0.81[1]	1.75[1]	2.42[1]	0.26[2]	0.64[1]	1.51[1]	2.12[1]
	24		0.31[1]	1.32[1]	1.95[1]		0.17[1]	1.10[1]	1.68[1]
14	12	0.21[1]	0.65[1]	1.39[5]	1.92[6]	0.20[2]	0.52[1]	1.21[3]	1.70[6]
	16		0.36[1]	1.15[3]	1.65[5]		0.24[1]	0.98[2]	1.45[5]
	24			0.72[2]	1.20[2]			0.57[2]	1.00[2]
16	12		0.31[1]	0.94[1]	1.35[1]		0.22[1]	0.81[1]	1.19[1]
	16		0.04[1]	0.71[1]	1.10[1]			0.59[1]	0.94[1]
	24			0.31[1]	0.86[1]			0.20[1]	0.52[1]

LATERAL LOAD = 20 PSF (MULTIPLIED BY 0.75 FOR STRENGTH & BY 0.70 FOR DEFLECTION DETERMINATIONS)

Wall Height (ft.)	Spacing (in.) o.c.	362S162-(mils) 33 ksi 33	43	54	68	362S200-(mils) 33 ksi 33	43	54	68	400S137-(mils) 33 ksi 33	43	54	68	400S162-(mils) 33 ksi 33	43	54	68
		50 ksi 33	43	54	68	50 ksi 33	43	54	68	50 ksi 33	43	54	68	50 ksi 33	43	54	68
8	12	1.47	2.25	3.74	4.95	1.81	2.80	4.70	6.26	1.32	1.98	3.30	4.54	1.66	2.50	4.23	5.70
	16	1.29	2.06	3.58	4.78	1.61	2.59	4.50	6.07	1.18	1.82	3.17	4.39	1.49	2.33	4.07	5.53
	24	0.94[7]	1.71	3.27	4.44	1.22[7]	2.17	4.12	5.70	0.91[7]	1.52	2.90	4.10	1.15	1.99	3.77	5.20
9	12	1.25	2.00	3.39	4.47	1.57	2.49	4.23	5.65	1.17	1.79	3.07	4.28	1.46	2.28	3.91	5.30
	16	1.04[7]	1.77	3.19	4.26	1.32	2.23	3.99	5.42	1.00[7]	1.60	2.90	4.09	1.25	2.06	3.72	5.08
	24	0.63[6]	1.36[7]	2.81[7]	3.86	0.87[6]	1.74	3.53	4.97	0.67[6]	1.23[7]	2.57	3.72	0.88[6]	1.66[7]	3.35	4.66
10	12	1.03[7]	1.73	3.00	3.95	1.31	2.16	3.73	5.00	1.00[7]	1.59	2.80	3.90	1.25	2.03	3.55	4.84
	16	0.79[6]	1.48[6]	2.77	3.71	1.03[3]	1.86[7]	3.46	4.73	0.80[6]	1.36[7]	2.60	3.67	1.01[6]	1.78	3.32	4.59
	24	0.35[3]	1.01[6]	2.35[6]	3.27[7]	0.53[6]	1.32[6]	2.95[6]	4.24[7]	0.43[3]	0.94[6]	2.22[3]	3.24[7]	0.56[3]	1.31[6]	2.89[7]	4.11
12	12	0.61[1]	1.20[2]	2.20[1]	2.94[1]	0.82[1]	1.51[1]	2.73[1]	3.73	0.66[1]	1.15[2]	2.20[1]	3.05	0.82[1]	1.50[1]	2.78[1]	3.80
	16	0.34[1]	0.91[1]	1.95[1]	2.67[1]	0.51[1]	1.17[1]	2.42[1]	3.43	0.42[1]	0.88[1]	1.95[1]	2.78[1]	0.53[1]	1.20[1]	2.50[1]	3.50[1]
	24		0.39[1]	1.48[1]	2.18[1]		0.57[1]	1.88[1]	2.89[1]		0.39[1]	1.50[1]	2.28[1]	0.03[1]	0.66[1]	2.00[1]	2.94[1]
14	12	0.26[1]	0.74[1]	1.55[3]	2.12[6]	0.40[1]	0.95[1]	1.91[6]	2.71[6]	0.35[1]	0.74[1]	1.62[6]	2.27[6]	0.44[1]	1.01[6]	2.05[6]	2.81[6]
	16		0.44[1]	1.29[3]	1.85[3]	0.08[1]	0.61[1]	1.61[3]	2.41[6]	0.09[1]	0.44[1]	1.36[2]	1.97[5]	0.14[1]	0.68[3]	1.75[3]	2.49[6]
	24			0.84[2]	1.36[2]		0.01[2]	1.08[2]	1.88[5]			0.89[2]	1.46[2]		0.12[2]	1.24[1]	1.93[1]
16	12		0.38[1]	1.06[1]	1.51[1]	0.09[1]	0.52[1]	1.31[1]	1.96[1]	0.09[1]	0.39[1]	1.14[1]	1.63[1]	0.13[1]	0.60[1]	1.48[1]	2.04[1]
	16		0.09[1]	0.81[1]	1.24[1]		0.19[1]	1.02[1]	1.67[1]		0.10[1]	0.88[1]	1.34[1]		0.28[1]	1.17[1]	1.73[1]
	24			0.39[1]	0.78[1]			0.52[1]	1.16[1]			0.42[1]	0.86[1]			0.88[1]	1.19[1]

1 = Deflection Exceeds L/120
2 = Deflection Exceeds L/240
3 = Deflection Exceeds L/360
6 = Deflection Exceeds L/600
7 = Deflection Exceeds L/720
If not noted, deflection is less than L/720

Important Notes:

- Allowable loads are based on specified weak axis and torsional bracing at 48" o.c. maximum for axial load calculation and continuous support of each flange for flexural calculation.
- Sections are punched with a standard punchout 1.5" wide, located on the centerline of the web 24" o.c.
- Allowable loads are based on a punched section for axial load calculation, and an unpunched section for flexural calculation as per *ICC-ES AC46-Appendix B*.
- Weak axis and torsional bracing should have sufficient stiffness and strength to resist axial load.
- Lateral load is multiplied by 0.75 for strength determination and by 0.70 for deflection determination. Axial load is not multiplied by any factor (Load factor = 1.0)
- Strength increase due to cold forming is incorporated in calculating allowable loads as per *AISI Specification Sec. A7.2.*
- Check lateral end reactions for web crippling if applicable.
- Loads in tables are in kips/stud.

LATERAL LOAD = 20 PSF (MULTIPLIED BY 0.75 FOR STRENGTH & BY 0.70 FOR DEFLECTION DETERMINATIONS)

Wall Height (ft.)	Spacing (in.) o.c.	400S200-(mils)				550S162-(mils)				600S137-(mils)				
		33 ksi		50 ksi		33 ksi		50 ksi		33 ksi		50 ksi		
		33	43	54	68	33	43	54	68	33	43	54	68	97
8	12	2.02	3.11	5.32	7.14	2.13	3.10	5.35	7.22	1.58	2.31	3.65	4.88	7.39
	16	1.83	2.91	5.13	6.96	2.00	2.98	5.24	7.10	1.48	2.20	3.57	4.79	7.31
	24	1.46	2.52	4.76	6.60	1.75	2.74	5.02	6.85	1.28	1.99	3.40	4.62	7.14
9	12	1.79	2.83	4.89	6.62	2.00	2.97	5.16	7.05	1.49	2.21	3.58	4.80	7.32
	16	1.56	2.58	4.65	6.39	1.84	2.81	5.04	6.89	1.36	2.08	3.47	4.69	7.21
	24	1.12	2.11	4.20	5.94	1.53	2.50	4.75	6.58	1.11	1.82	3.25	4.47	7.00
10	12	1.55	2.52	4.42	6.04	1.86	2.81	4.98	6.80	1.39	2.11	3.49	4.71	7.23
	16	1.28[7]	2.23	4.14	5.77	1.66	2.62	4.80	6.60	1.23	1.95	3.35	4.57	7.09
	24	0.78[5]	1.69[6]	3.62	5.24	1.29	2.24	4.45	6.21	0.93	1.62	3.09	4.29	6.82
12	12	1.06[1]	1.88[1]	3.43[1]	4.80[1]	1.52[1]	2.44[1]	4.47[1]	6.18[1]	1.18[1]	1.87[1]	3.27[1]	4.48[1]	7.00[1]
	16	0.74[4]	1.52[1]	3.10[1]	4.48[1]	1.25[1]	2.17[1]	4.21[1]	5.88[1]	0.94[1]	1.63[1]	3.07[1]	4.27[1]	6.79[1]
	24	0.17[1]	0.90[1]	2.50[1]	3.84[1]	0.76[1]	1.66[1]	3.72[1]	5.33[1]	0.52[4]	1.18[1]	2.68[1]	3.86[1]	6.39[1]
14	12	0.62[3]	1.28[6]	2.51[6]	3.56[7]	1.14[6]	2.00	3.83	5.36	0.90[7]	1.57	3.00	4.18	6.69
	16	0.27[1]	0.90[3]	2.16[6]	3.21[6]	0.82[6]	1.66[6]	3.51[7]	4.99	0.61[6]	1.26[7]	2.73	3.89	6.40
	24		0.25[2]	1.56[2]	2.59[3]	0.24[3]	1.05[6]	2.91[6]	4.32[6]	0.09[3]	0.69[6]	2.21[6]	3.33[7]	5.84
16	12	0.26[1]	0.78[1]	1.79[1]	2.62[1]	0.77[1]	1.54[1]	3.14[1]	4.46[1]	0.61[1]	1.24[1]	2.67[1]	3.81[1]	6.28[1]
	16		0.41[1]	1.45[1]	2.28[1]	0.42[1]	1.16[1]	2.77[1]	4.04[1]	0.27[1]	0.87[1]	2.32[1]	3.43[1]	5.89[1]
	24			0.87[1]	1.88[1]		0.48[1]	2.12[1]	3.29[1]		0.20[1]	1.69[1]	2.74[1]	5.16[1]

LATERAL LOAD = 20 PSF (MULTIPLIED BY 0.75 FOR STRENGTH & BY 0.70 FOR DEFLECTION DETERMINATIONS)

Wall Height (ft.)	Spacing (in.) o.c.	600S162-(mils)					600S200-(mils)					600S250-(mils)			
		33 ksi		50 ksi			33 ksi		50 ksi			33 ksi	50 ksi		
		33	43	54	68	97	33	43	54	68	97	43	54	68	97
8	12	2.21	3.19	5.43	7.25	11.17	2.61	4.03	7.15	9.61	15.07	4.48	8.00	11.41	17.73
	16	2.10	3.08	5.33	7.14	11.05	2.49	3.90	7.02	9.48	14.93	4.34	7.86	11.26	17.59
	24	1.87	2.86	5.13	6.93	10.82	2.24	3.64	6.77	9.24	14.66	4.07	7.60	10.97	17.30
9	12	2.11	3.09	5.34	7.15	11.08	2.49	3.88	6.94	9.37	14.74	4.32	7.77	11.08	17.31
	16	1.97	2.95	5.21	7.01	10.91	2.33	3.71	6.77	9.21	14.56	4.15	7.60	10.90	17.12
	24	1.68	2.67	4.96	6.74	10.61	2.02	3.38	6.45	8.89	14.20	3.81	7.27	10.52	16.75
10	12	1.98	2.97	5.23	7.03	10.92	2.34	3.70	6.69	9.08	14.34	4.14	7.51	10.70	16.80
	16	1.81	2.79	5.07	6.86	10.73	2.15	3.50	6.48	8.88	14.11	3.93	7.30	10.47	16.56
	24	1.46	2.45	4.75	6.52	10.35	1.77	3.09	6.08	8.49	13.66	3.51	6.88	10.00	16.10
12	12	1.68	2.64	4.82	6.64	10.57	2.01	3.28	6.06	8.34	13.29	3.71	6.87	9.77	15.53
	16	1.44	2.40	4.59	6.38	10.27	1.74	2.99	5.77	8.05	12.95	3.41	6.56	9.43	15.18
	24	0.98[3]	1.92	4.14	5.88	9.89	1.23[1]	2.43	5.21	7.49	12.30	2.82	5.97	8.77	14.50
14	12	1.34	2.25	4.28	5.96	9.81	1.62	2.78	5.29	7.42	11.94	3.20	6.10	8.64	13.95
	16	1.03[6]	1.93[7]	3.97	5.61	9.39	1.28[7]	2.41	4.92	7.04	11.48	2.81	5.70	8.20	13.48
	24	0.47[5]	1.34[3]	3.39[6]	4.97	8.60	0.66[6]	1.72[6]	4.22[7]	6.32	10.62	2.08[7]	4.94	7.36	12.59
16	12	0.98[1]	1.82[1]	3.64	5.14	8.56	1.21[1]	2.25	4.45	6.37	10.37	2.65	5.26	7.41	12.18
	16	0.82[1]	1.45[1]	3.27[1]	4.73	8.05	0.82[1]	1.82[1]	4.02	5.92	9.82	2.18	4.78	6.88	11.61
	24		0.77[1]	2.61[1]	3.97	7.11[1]	0.12[1]	1.03[1]	3.23[1]	5.09[1]	8.81	1.34[1]	3.90[1]	5.91[1]	10.55

1 = Deflection Exceeds L/120
2 = Deflection Exceeds L/240
3 = Deflection Exceeds L/360
6 = Deflection Exceeds L/600
7 = Deflection Exceeds L/720
If not noted, deflection is less than L/720

Important Notes:

- Allowable loads are based on specified weak axis and torsional bracing at 48" o.c. maximum for axial load calculation and continuous support of each flange for flexural calculation.
- Sections are punched with a standard punchout 1.5" wide, located on the centerline of the web 24" o.c.
- Allowable loads are based on a punched section for axial load calculation, and an unpunched section for flexural calculation as per *ICC-ES AC46-Appendix B.*
- Weak axis and torsional bracing should have sufficient stiffness and strength to resist axial load.
- Lateral load is multiplied by 0.75 for strength determination and by 0.70 for deflection determination. Axial load is not multiplied by any factor (Load factor = 1.0)
- Strength increase due to cold forming is incorporated in calculating allowable loads as per *AISI Specification Sec. A7.2.*
- Check lateral end reactions for web crippling if applicable.
- Loads in tables are in kips/stud.

Maximum Distance Between Anchorge Points of Wall Bridging (ft.)

Stud Designation (All Studs 50ksi)	Bridging Method	6' Wall Height 1 Bridging Row 16" o.c.	6' Wall Height 1 Bridging Row 24" o.c.	9' & 10' Wall Hgt 2 Bridging Rows 16" o.c.	9' & 10' Wall Hgt 2 Bridging Rows 24" o.c.	12' Wall Height 2 Bridging Rows 16" o.c.	12' Wall Height 2 Bridging Rows 24" o.c.
362SG200-33mil	BB150 (p.39) w/BC8 (p.40)	Anchorage at 18ft (max.)					
362SG250-33mil							
362SG200-43mil							
362SG250-43mil							
362SG200-54mil				Anchorage at 12ft (max.)			
362SG250-54mil			Anchorage at 8ft (max.)				
362SG200-68mil							
362SG250-68mil							
362SG200-97mil				Anchorage at 8ft (max.)			
362SG250-97mil							
600SG162-33mil	BB150 (p 39) w/BC600 (p 40)	Anchorage at 12ft. (max.)					
600SG162-43mil							
600SG200-33mil							
600SG250-33mil							
600SG200-43mil							
600SG250-43mil							
600SG200-54mil							
600SG250-54mil							
600SG200-68mil							
800SG162-33mil	BB150 (p.39) w/BC800 (p.40)						
800SG162-43mil							
800SG200-33mil							
800SG250-33mil							
800SG200-43mil							
800SG250-43mil							
800SG200-54mil							
800SG250-54mil							
600SG162-33mil	Buckle Bridge™ (p 39)	Anchorage at 18ft (max.)					
600SG162-43mil							
600SG200-33mil							
600SG250-33mil							
600SG200-43mil							
600SG250-43mil							
600SG200-54mil							
600SG250-54mil							
600SG200-68mil							
600SG250-68mil							
600SG200-97mil							
600SG250-97mil							
800SG162-33mil	Buckle Bridge™ (p.39)	Anchorage at 18ft (max.)					
800SG162-43mil							
800SG200-33mil							
800SG250-33mil							
800SG200-43mil							
800SG250-43mil				Anchorage at 12ft (max.)			
800SG200-54mil							
800SG250-54mil							
800SG200-68mil							
800SG250-68mil							
800SG200-97mil							
800SG250-97mil							

Table Key:

- = Anchorage @ 18ft (max)
- = Anchorage @ 12ft (max)
- = Anchorage @ 8ft (max)
- = Anchorage @ less than 8ft

Accumulative Lateral Bracing (Bridging) Force,
P_{Brace} = 0.02 x Single Stud Axial Load x (Wall Anchorage Spacing / Stud Spacing)

Important Notes:

- Lateral bracing (bridging) design is calculated according to the requirements of *AISI Wall Stud Design Standard 2004*.
- Bridging is located at 48" o.c. maximum spacing.
- The above table is applicable for load bearing walls having additional wind pressure up to 5 psf.
- For wind pressure higher than 5psf acting with axial loads, use the bridging design for the higher effect of the axial load or the wind load.

Removal of Accumulative Bridging Loads

Load Bearing Wall Bridging Row Anchored to Jamb Stud or End Column - Track Bracing Utilizing BuckleBridge

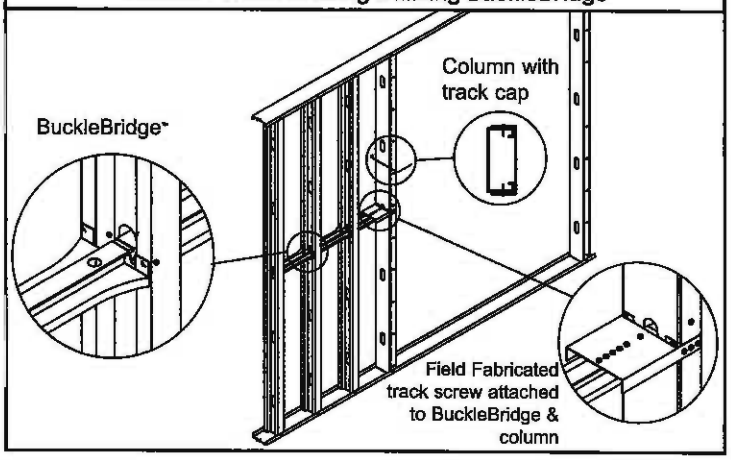

Removal of Accumulative Bridging Loads

Load Bearing Wall Bridging Row Anchored to Floor System Through Cross Bracing - Utilizing BridgeBar® 150 with BC600 / BC800

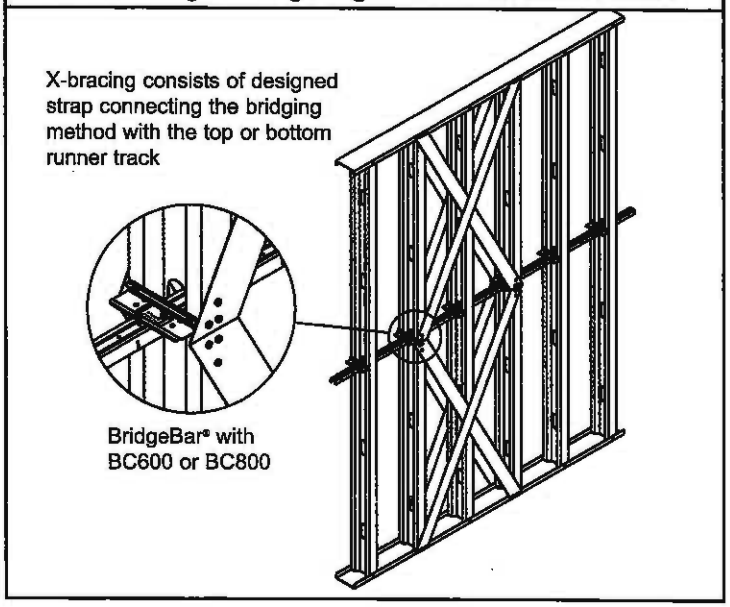

Important Notes:

1. Web punchouts were not considered for shear or web crippling. Shear and web crippling reduction factors required for web punchouts, per *ICC-ES Acceptance Criteria AC46, Appendix B.*
2. Spans are based on continuous lateral support of the compression flange.
3. For two equal spans, the listed span is the distance from either end support to the center support. Joists must be continuous over the center support.
4. Web crippling capacity is based on a 3.5" bearing length at end and interior supports.
5. Joists must be braced against rotation at all supports by track or blocking.
6. Joist spans are based on 50ksi for the 54, 68, and 97 mil thicknesses, and 33ksi for thinner members.
7. Total load deflection = L/240. Live load as noted.
8. Live load has been checked for unbalanced load conditions.

Floor joist bridging may be spaced as follows, except where member design requires or will accommodate an alternate spacing.

Span (ft)	Minimum Number of Rows
Up to 14ft	1 row at mid-span
14ft to 20ft	2 rows at one-third points
20ft to 26ft	3 rows at one-fourth points

10 PSF DEAD LOAD AND 20 PSF LIVE LOAD

Member	Live Load Deflection L/360						Live Load Deflection L/480					
	Single Span			Two Equal Spans			Single Span			Two Equal Spans		
	Spacing (in) o.c.			Spacing (in) o.c.			Spacing (in) o.c.			Spacing (in) o.c.		
	12	16	24	12	16	24	12	16	24	12	16	24
600S162-33	15' 9"	13' 9" e	11' 3" e	15' 11" i	13' 9" i	11' 3" a	14' 3"	13' 0" e	11' 3" e	15' 11" i	13' 9" i	11' 3" a
600S200-33	16' 5" e	14' 3" e	11' 7" e	16' 5" i	14' 3" i	11' 6" a	14' 11"	13' 7" e	11' 7" e	16' 5" i	14' 3" i	11' 6" a
600S162-43	17' 2"	15' 7"	13' 7"	19' 9" i	16' 8" i	13' 7" i	15' 7"	14' 2"	12' 4"	17' 6" i	15' 10" i	13' 7" i
600S200-43	18' 0"	16' 4"	13' 10"	19' 6" i	16' 11" i	13' 10" i	16' 4"	14' 10"	13' 0"	18' 4" i	16' 8" i	13' 10" i
600S250-43	18' 10"	17' 1"	14' 2"	20' 0" i	17' 4" i	14' 2" i	17' 1"	15' 7"	13' 7"	19' 3" i	17' 4" i	14' 2" i
600S162-54	18' 5"	16' 8"	14' 7"	20' 8"	18' 9" i	16' 4" i	16' 8"	15' 2"	13' 3"	18' 9"	17' 0"	14' 10" i
600S200-54	19' 4"	17' 7"	15' 4"	21' 8"	19' 8" i	17' 3" i	17' 7"	15' 11"	13' 11"	19' 8"	17' 11"	15' 8" i
600S250-54	20' 2"	18' 3"	16' 0"	22' 7"	20' 7" i	17' 11" i	18' 3"	16' 7"	14' 6"	20' 7"	18' 8"	16' 4" i
600S162-68	19' 8"	17' 11"	15' 8"	22' 2"	20' 11"	18' 7"	17' 11"	16' 3"	14' 2"	20' 3"	18' 9"	15' 11"
600S200-68	20' 6"	18' 10"	16' 5"	23' 3"	21' 7"	19' 6"	18' 10"	17' 1"	14' 11"	21' 2"	19' 5"	16' 9"
600S250-68	21' 5"	19' 9"	17' 3"	24' 5"	22' 2"	19' 4" i	19' 0"	17' 11"	15' 8"	22' 2"	20' 2"	17' 7"
600S162-97	21' 10"	19' 10"	17' 4"	24' 6"	22' 3"	19' 6"	19' 10"	18' 0"	15' 9"	22' 3"	20' 3"	17' 6"
600S200-97	23' 0"	20' 11"	18' 3"	25' 10"	23' 6"	20' 6"	20' 11"	19' 0"	16' 7"	23' 6"	21' 4"	18' 8"
600S250-97	24' 2"	21' 11"	19' 2"	27' 2"	24' 8"	21' 6"	21' 11"	19' 11"	17' 5"	24' 8"	22' 5"	19' 7"
800S162-33	18' 2" e	15' 9" e	12' 10" e	17' 9" a	14' 5" a	10' 8" a	16' 0" e	13' 9" e	12' 10" e	17' 6" a	14' 5" a	10' 8" a
800S200-33	18' 10" e	16' 4" e	13' 4" e	18' 1" a	14' 9" a	10' 10" a	16' 10" e	16' 4" e	13' 4" e	18' 1" a	14' 9" a	10' 10" a
800S162-43	21' 7"	19' 6"	15' 11" e	22' 6" i	19' 6" i	15' 11" i	19' 7"	17' 10"	15' 7" e	22' 0" i	19' 6" i	15' 11" i
800S200-43	22' 7"	20' 6" e	16' 10" e	23' 9" i	20' 7" i	16' 10" i	20' 6"	18' 8"	16' 3" e	23' 0" i	20' 7" i	16' 10" i
800S250-43	23' 7"	20' 9" e	16' 11" e	24' 0" i	20' 9" i	16' 11" i	21' 5"	19' 5"	16' 11" e	24' 0" i	20' 9" i	16' 11" i
800S162-54	22' 2"	21' 1"	18' 4"	26' 0" i	23' 8" i	20' 6" i	21' 1"	[illegible]				
800S200-54	24' 3"	22' 1"	19' 3"	27' 3" i	24' 9" i	21' 7" i	22' 1"	[illegible]				
800S250-54	25' 3"	22' 11"	20' 0"	28' 4" i	25' 9" i	22' 6" i	22' 11"	[illegible]				
800S162-68	24' 11"	22' 7"	19' 9"	27' 11"	25' 5"	22' 2" i	22' 7"	[illegible]				
800S200-68	26' 1"	23' 8"	20' 8"	29' 3"	26' 7"	23' 3" i	23' 8"	[illegible]				
800S250-68	27' 3"	24' 9"	21' 7"	30' 7"	27' 9" i	24' 3" i	24' 9"	[illegible]				
800S162-97	27' 8"	25' 1"	21' 11"	31' 1"	28' 2"	24' 6"	25' 1"	[illegible]				
800S200-97	29' 0"	26' 4"	23' 0"	32' 7"	29' 7"	25' 10"	26' 4"	[illegible]				
800S250-97	30' 4"	27' 6"	24' 1"	34' 0"	30' 11"	27' 0"	27' 6"	[illegible]				
1000S162-43	24' 11" e	21' 6" e	17' 7" e	24' 11" a	21' 6" a	16' 6" a	23' 7" e	21'				
1000S200-43	26' 4" e	22' 9" e	18' 7" e	26' 4" a	22' 8" a	17' 0" a	24' 7" e	22'				
1000S250-43	26' 7" e	23' 0" e	18' 10" e	26' 7" a	22' 10" a	17' 1" a	25' 6" e	23'				
1000S162-54	27' 10"	25' 4"	22' 11"	31' 4" i	28' 5" i	23' 10" i	25' 4"	[illegible]				
1000S200-54	29' 1"	26' 8"	23' 11"	32' 8" i	29' 8" i	24' 6" i	26' 5"	[illegible]				
1000S250-54	30' 2"	27' 5"	24' 0"	33' 11" i	30' 7" i	26' 0" i	27' 5"	[illegible]				
1000S162-68	29' 11"	27' 2"	23' 9"	33' 7"	30' 6" i	26' 8" i	27' 2"	[illegible]				
1000S200-68	31' 3"	28' 4"	24' 9"	35' 1"	31' 10" i	27' 10" i	28' 4"	[illegible]				
1000S250-68	32' 6"	29' 6"	25' 9"	36' 6" i	33' 2" i	28' 11" i	29' 6"	[illegible]				
1000S162-97	33' 4"	30' 3"	26' 5"	37' 5"	34' 0"	29' 8"	30' 3"	[illegible]				
1000S200-97	34' 9"	31' 7"	27' 7"	39' 1"	35' 8"	31' 0"	31' 7"	[illegible]				
1000S250-97	36' 3"	32' 11"	28' 9"	40' 8"	36' 11"	32' 3"	32' 11"	[illegible]				
1200S162-54	32' 6" e	29' 6" e	25' 9" e	36' 6" a	31' 9" a	25' 5" a	29' 6" e	26' 10" e	23' 5" e	33' 2" a	30' 1" a	25' 5" a
1200S200-54	33' 9" e	30' 8" e	26' 8" e	37' 9" a	32' 8" a	25' 10" a	30' 8" e	27' 10" e	24' 4" e	34' 5" a	31' 3" a	25' 10" a
1200S250-54	35' 0" e	31' 9" e	27' 3" e	38' 7" a	33' 5" a	26' 2" a	31' 9" e	28' 11" e	25' 3" e	35' 8" a	32' 5" a	26' 2" a
1200S162-68	34' 11"	31' 8"	27' 8"	39' 2" i	35' 7" i	31' 1" i	31' 8"	28' 10"	25' 2"	35' 7"	32' 4" i	28' 1" i
1200S200-68	36' 3"	33' 0"	28' 10"	40' 9" i	37' 0" i	32' 4" i	33' 0"	29' 11"	26' 2"	37' 0"	33' 8" i	29' 4" i
1200S250-68	37' 6"	34' 2"	29' 10"	42' 2" i	38' 5" i	32' 4" i	34' 2"	31' 1"	27' 2"	38' 5" i	34' 11" i	30' 6" i
1200S162-97	38' 10"	35' 4"	30' 10"	43' 8"	39' 8"	34' 8"	35' 4"	32' 1"	28' 0"	39' 8"	36' 0"	31' 6"
1200S200-97	40' 6"	36' 9"	32' 1"	45' 5"	41' 3"	36' 1"	36' 9"	33' 5"	29' 2"	41' 3"	37' 6"	32' 9"
1200S250-97	42' 0"	38' 2"	33' 4"	47' 2"	42' 10"	37' 5" i	38' 2"	34' 8"	30' 3"	42' 10"	38' 11"	34' 0"

"e" Requires web stiffeners at end supports. "i" Requires web stiffeners at interior supports. "a" Requires web stiffeners at all supports.

-BRIDGING EVERY SPAN
-NOTES 4, 5, 6 &

/ 10.33FT O/C SPAN = 0.34 IN = L/360 / 0.26 IN = L/480

10 PSF DEAD LOAD AND 50 PSF LIVE LOAD

Member	Live Load Deflection L/360						Live Load Deflection L/480					
	Single Span			Two Equal Spans			Single Span			Two Equal Spans		
	Spacing (in) o.c.			Spacing (in) o.c.			Spacing (in) o.c.			Spacing (in) o.c.		
	12	16	24	12	16	24	12	16	24	12	16	24
600S162-33	11' 3" e	9' 9" e	7' 11" e	11' 3" a	9' 3" a	6' 10" a	10' 6" e	9' 7" e	7' 11" e	11' 3" a	9' 3" a	6' 10" a
600S200-33	11' 7" e	10' 0" e	8' 2" e	11' 6" a	9' 5" a	7' 0" a	11' 0" e	10' 0" e	8' 2" e	11' 6" a	9' 5" a	7' 0" a
600S162-43	12' 7"	11' 5" e	9' 7" e	13' 7" i	11' 9" i	9' 7" i	11' 5"	10' 5"	9' 1" e	12' 10" i	11' 8" i	9' 7" i
600S200-43	13' 3"	11' 11" e	9' 9" e	13' 10" i	11' 11" i	9' 9" i	12' 0"	10' 11"	9' 6" e	13' 6" i	11' 11" i	9' 9" i
600S250-43	13' 10"	12' 3" e	10' 0" e	14' 2" i	12' 3" i	10' 0" a	12' 7"	11' 5" e	10' 0" e	14' 2" i	12' 3" i	10' 0" a
600S162-54	13' 6"	12' 3"	10' 9"	15' 2" i	13' 10" i	12' 1" i	12' 3"	11' 2"	9' 9"	13' 10"	12' 6" i	10' 11" i
600S200-54	14' 3"	12' 11"	11' 3"	16' 0" i	14' 6" i	12' 8" i	12' 11"	11' 9"	10' 3"	14' 6" i	13' 2" i	11' 6" i
600S250-54	14' 10"	13' 6"	11' 9"	16' 8" i	15' 1" i	13' 2" i	13' 6"	12' 3"	10' 8"	15' 1" i	13' 9" i	12' 0" i
600S162-68	14' 6"	13' 2"	11' 6"	18' 4"	14' 10"	12' 11" i	13' 2"	12' 0"	10' 5"	14' 10"	13' 5"	11' 9" i
600S200-68	15' 3"	13' 10"	12' 1"	17' 2"	15' 7"	13' 7" i	13' 10"	12' 7"	11' 0"	15' 7"	14' 2"	12' 4" i
600S250-68	16' 0"	14' 6"	12' 8"	18' 0"	16' 4" i	14' 3" i	14' 6"	13' 2"	11' 6"	16' 4"	14' 10"	12' 11" i
600S162-97	16' 1"	14' 7"	12' 9"	18' 1"	16' 5"	14' 4"	14' 7"	13' 3"	11' 7"	16' 5"	14' 11"	13' 0"
600S200-97	16' 11"	15' 5"	13' 5"	19' 0"	17' 3"	15' 1"	15' 5"	14' 0"	12' 3"	17' 3"	15' 8"	13' 9"
600S250-97	17' 10"	16' 2"	14' 1"	20' 0"	18' 2"	15' 10"	16' 2"	14' 8"	12' 10"	18' 2"	16' 6"	14' 5"
800S162-33	12' 10" e	11' 1" e	7' 6" e	10' 8" a	8' 7" a	6' 0" a	12' 10" e	11' 1" e	7' 6" e	10' 8" a	8' 7" a	6' 0" a
800S200-33	13' 4" e	11' 4" e	7' 6" e	10' 10" a	8' 8" a	6' 0" a	13' 4" e	11' 4" e	7' 6" e	10' 10" a	8' 8" a	6' 0" a
800S162-43	15' 11" e	13' 9" e	11' 3" e	15' 11" i	13' 9" a	10' 5" a	14' 5" e	13' 1" e	11' 3" e	15' 11" i	13' 9" a	10' 5" a
800S200-43	16' 8" e	14' 7" e	11' 10" e	16' 10" i	14' 4" a	10' 9" a	15' 1" e	13' 9" e	11' 10" e	16' 10" i	14' 4" a	10' 9" a
800S250-43	16' 11" e	14' 8" e	12' 0" e	16' 11" i	14' 5" a	10' 10" a	15' 9" e	14' 4" e	12' 0" e	16' 11" i	14' 5" a	10' 10" a
800S162-54	17' 1"	15' 6"	13' 7" e	19' 2" i	17' 5" i	15' 2" i	15' 6"	14' 1"	12' 4"	17' 5" i	15' 10" i	13' 10" i
800S200-54	17' 10"	16' 3"	14' 2" e	20' 1" i	18' 3" i	15' 7" i	16' 3"	14' 9"	12' 10"	18' 3" i	16' 7" i	14' 6" i
800S250-54	18' 7"	16' 10"	14' 9" e	20' 10" i	18' 11" i	15' 11" i	16' 10"	15' 4"	13' 5"	18' 11" i	17' 3" i	15' 0" i
800S162-68	18' 4"	16' 8"	14' 6"	20' 7"	18' 8" i	16' 4" i	16' 8"	15' 1"	13' 2"	18' 8"	17' 0" i	14' 10" i
800S200-68	19' 2"	17' 5"	15' 3"	21' 7" i	19' 7" i	17' 1" i	17' 5"	15' 10"	13' 10"	19' 7"	17' 9" i	15' 6" i
800S250-68	20' 0"	18' 2"	15' 11"	22' 6" i	20' 5"	17' 10" i	18' 2"	16' 6"	14' 5"	20' 5"	18' 7" i	16' 3" i
800S162-97	20' 4"	18' 6"	16' 2"	22' 10"	20' 9"	18' 2"	18' 6"	16' 10"	14' 8"	20' 9"	18' 10"	16' 6"
800S200-97	21' 4"	19' 5"	16' 11"	24' 0"	21' 5"	19' 0"	19' 5"	17' 7"	15' 5"	21' 9"	19' 9"	17' 3"
800S250-97	22' 4"	20' 3"	17' 8"	25' 1"	22' 9"	19' 11" i	20' 3"	18' 5"	16' 1"	22' 9"	20' 8"	18' 1"
1000S162-43	17' 7" e	15' 3" e	12' 5" e	16' 6" a	13' 4" a	9' 10" a	17' 4" e	15' 3" e	12' 5" e	16' 6" a	13' 4" a	9' 10" a
1000S200-43	18' 7" e	16' 1" e	13' 2" e	17' 0" a	13' 9" a	10' 1" a	18' 1" e	16' 1" e	13' 2" e	17' 0" a	13' 9" a	10' 1" a
1000S250-43	18' 10" e	16' 3" e	13' 3" e	17' 1" a	13' 10" a	10' 1" a	18' 10" e	16' 3" e	13' 3" e	17' 1" a	13' 10" a	10' 1" a
1000S162-54	20' 6"	18' 8" e	16' 3" e	23' 1" i	20' 8" i	16' 0" i	18' 8"	16' 11"	14' 9" e	20' 11" i	19' 0" i	16' 0" i
1000S200-54	21' 5"	19' 5" e	17' 0" e	24' 0" i	21' 2" i	18' 3" i	19' 5"	17' 8"	15' 5" e	21' 10" i	19' 10" i	16' 3" i
1000S250-54	22' 3"	20' 2" e	17' 8" e	25' 0" i	21' 7" i	16' 6" a	20' 2"	18' 4"	16' 0" e	22' 8" i	20' 7" i	16' 6" a
1000S162-68	22' 1"	20' 0"	17' 6"	24' 9" i	22' 6" i	19' 8" i	20' 0"	18' 2"	15' 11"	22' 6" i	20' 5" i	17' 10" i
1000S200-68	23' 0"	20' 11"	18' 3"	25' 10" i	23' 6" i	20' 6" i	20' 11"	19' 0"	16' 7"	23' 6" i	21' 4" i	18' 7" i
1000S250-68	23' 11"	21' 9"	19' 0"	26' 10" i	24' 5" i	21' 0" i	21' 9"	19' 9"	17' 3"	24' 5" i	22' 2" i	19' 4" i
1000S162-97	24' 8"	22' 3"	19' 6"	27' 7"	25' 0"	21' 10" i	22' 3"	20' 3"	17' 8"	25' 0"	22' 9"	19' 10"
1000S200-97	25' 7"	23' 3"	20' 4"	28' 9"	26' 2"	22' 10" i	23' 3"	21' 2"	18' 6"	26' 2"	23' 9"	20' 9"
1000S250-97	26' 8"	24' 3"	21' 2"	30' 0"	27' 3"	23' 9" i	24' 3"	22' 0"	19' 3"	27' 3"	24' 9"	21' 7" i
1200S162-54	23' 11" e	21' 9" e	18' 4" e	25' 5" a	20' 9" a	15' 5" a	21' 9" e	19' 9" e	17' 3" e	24' 5" a	20' 9" a	15' 5" a
1200S200-54	24' 10" e	22' 7" e	18' 10" e	25' 10" a	21' 1" a	15' 7" a	22' 7" e	20' 6" e	17' 11" e	25' 4" a	21' 1" a	15' 7" a
1200S250-54	25' 9" e	23' 5" e	19' 3" e	26' 2" a	21' 4" a	15' 9" a	23' 5" e	21' 3" e	18' 7" e	26' 2" a	21' 4" a	15' 9" a
1200S162-68	25' 6"	23' 4"	20' 5" e	28' 10" i	28' 3" i	22' 1" i	23' 4"	21' 3"	18' 6" e	28' 3" i	23' 10" i	20' 10" i
1200S200-68	26' 9"	24' 3"	21' 2" e	30' 0" i	27' 3" i	23' 3" i	24' 3"	22' 1"	19' 3" e	27' 3" i	24' 9" i	21' 8" i
1200S250-68	27' 9"	25' 2"	22' 0" e	31' 2" i	28' 0" i	22' 10" i	25' 2"	22' 11"	20' 0" e	28' 3" i	25' 8" i	22' 5" i
1200S162-97	28' 8"	26' 0"	22' 9"	32' 2"	29' 2"	25' 6" i	26' 0"	23' 8"	20' 8"	29' 2"	26' 6"	23' 2" i
1200S200-97	29' 10"	27' 1"	23' 8"	33' 6"	30' 5" i	26' 7" i	27' 1"	24' 7"	21' 6"	30' 5"	27' 7"	24' 1" i
1200S250-97	30' 11"	28' 1"	24' 7"	34' 9"	31' 7" i	27' 7" i	28' 1"	25' 6"	22' 4"	31' 7"	28' 8"	25' 0" i

"e" Requires web stiffeners at end supports.
"i" Requires web stiffeners at interior supports.
"a" Requires web stiffeners at all supports.

See page 43 for Allowable Floor Span Table Notes.

40 PSF DEAD LOAD AND 125 PSF LIVE LOAD

Member	Live Load Deflection L/360						Live Load Deflection L/480					
	Single Span			Two Equal Spans			Single Span			Two Equal Spans		
	Spacing (in) o.c.			Spacing (in) o.c.			Spacing (in) o.c.			Spacing (in) o.c.		
	12	16	24	12	16	24	12	16	24	12	16	24
600S162-33	6' 9" e	5' 6" e	3' 8" e	5' 5" a	4' 4" a	2' 11" a	6' 9" e	5' 6" e	3' 8" e	5' 5" a	4' 4" a	2' 11" a
600S200-33	7' 0" e	5' 6" e	3' 8" e	5' 6" a	4' 4" a	2' 11" a	7' 0" e	5' 6" e	3' 8" e	5' 6" a	4' 4" a	2' 11" a
600S162-43	8' 2" e	7' 1" e	5' 9" e	8' 2" a	7' 0" e	5' 3" a	8' 2" e	7' 1" e	5' 9" e	8' 2" a	7' 0" a	5' 3" a
600S200-43	8' 4" e	7' 2" e	5' 10" e	8' 4" a	7' 1" a	5' 3" a	8' 4" e	7' 2" e	5' 10" e	8' 4" a	7' 1" a	5' 3" a
600S250-43	8' 6" e	7' 4" e	6' 0" e	8' 6" a	7' 2" a	5' 4" a	8' 6" e	7' 4" e	6' 0" e	8' 6" a	7' 2" a	5' 4" a
600S162-54	10' 0"	9' 1" e	7' 5" e	10' 7"	9' 2"	7' 5" a	9' 1"	8' 3" e	7' 2" e	10' 2"	9' 2"	7' 5" a
600S200-54	10' 6"	9' 6" e	7' 9" e	11' 0"	9' 6"	7' 9" a	9' 6"	8' 8" e	7' 6" e	10' 8"	9' 6"	7' 9" a
600S250-54	10' 11" e	9' 10" e	8' 0" e	11' 4"	9' 10"	8' 0" a	9' 11"	9' 0" e	7' 10" e	11' 2"	9' 10"	8' 0" a
600S162-68	10' 8"	9' 8"	8' 6" e	12' 0"	10' 11"	8' 11"	9' 8"	8' 10"	7' 8"	10' 11"	9' 11"	8' 8"
600S200-68	11' 3"	10' 2"	8' 11" e	12' 7"	11' 6"	9' 4"	10' 2"	9' 3"	8' 1"	11' 6"	10' 5"	9' 1"
600S250-68	11' 9"	10' 8"	9' 0" e	12' 8"	11' 0"	9' 0"	10' 6"	9' 9"	8' 6" e	12' 0"	10' 11"	9' 0"
600S162-97	11' 10"	10' 9"	9' 5"	13' 4"	12' 1"	10' 7"	10' 9"	9' 9"	8' 6"	12' 1"	11' 0"	9' 7"
600S200-97	12' 6"	11' 4"	9' 11"	14' 0"	12' 9"	11' 1"	11' 4"	10' 4"	9' 0"	12' 9"	11' 7"	10' 1"
600S250-97	13' 1"	11' 11"	10' 5"	14' 9"	13' 4"	11' 8"	11' 11"	10' 10"	9' 5"	13' 4"	12' 2"	10' 7"
800S162-33	5' 6" e	4' 1" e	2' 9" e	4' 4" a	3' 3" a	2' 2" a	5' 6" e	4' 1" e	2' 9" e	4' 4" a	3' 3" a	2' 2" a
800S200-33	5' 8" e	4' 1" e	2' 9" e	4' 4" a	3' 3" a	2' 2" a	5' 6" e	4' 1" e	2' 9" e	4' 4" a	3' 3" a	2' 2" a
800S162-43	9' 7" e	8' 3" e	6' 1" e	8' 3" a	6' 8" a	4' 10" a	9' 7" e	8' 3" e	6' 1" e	8' 3" a	6' 8" a	4' 10" a
800S200-43	10' 1" e	8' 9" e	6' 1" e	8' 6" a	6' 10" a	4' 10" a	10' 1" e	8' 9" e	6' 1" e	8' 6" a	6' 10" a	4' 10" a
800S250-43	10' 2" e	8' 10" e	6' 1" e	8' 7" a	6' 10" a	4' 10" a	10' 2" e	8' 10" e	6' 1" e	8' 7" a	6' 10" a	4' 10" a
800S162-54	12' 7" e	11' 3" e	9' 2" e	13' 0"	10' 10" a	8' 1" a	11' 5" e	10' 4" e	9' 1" e	12' 10"	10' 10" a	8' 1" a
800S200-54	13' 2" e	11' 6" e	9' 5" e	13' 4" a	11' 0" a	8' 2" a	11' 11" e	10' 10" e	9' 5" e	13' 4" a	11' 0" a	8' 2" a
800S250-54	13' 6" e	11' 9" e	9' 7" e	13' 6" a	11' 1" a	8' 3" a	12' 5" e	11' 3" e	9' 7" e	13' 6" a	11' 1" a	8' 3" a
800S162-68	13' 6"	12' 3" e	10' 8" e	15' 2"	13' 5"	10' 11" a	12' 3"	11' 2"	9' 9" e	13' 9"	12' 6"	10' 11" a
800S200-68	14' 2"	12' 10" e	11' 2" e	15' 10"	14' 0"	11' 5" a	12' 10"	11' 8" e	10' 2" e	14' 5"	13' 1"	11' 5" a
800S250-68	14' 9"	13' 5" e	11' 0" e	15' 6"	13' 5"	11' 0" a	13' 5"	12' 2" e	10' 8" e	15' 1"	13' 5"	11' 0" a
800S162-97	15' 0"	13' 7"	11' 11"	16' 10"	15' 3"	13' 2"	13' 7"	12' 4"	10' 10"	16' 3"	13' 11"	12' 2"
800S200-97	15' 9"	14' 3"	12' 6"	17' 8"	16' 0"	13' 11"	14' 3"	13' 0"	11' 4"	16' 0"	14' 7"	12' 9"
800S250-97	16' 5"	14' 11"	13' 0"	18' 5"	16' 9"	14' 4"	14' 11"	13' 7"	11' 10"	16' 9"	15' 3"	13' 4"
1000S162-43	9' 8" e	7' 3" e	4' 10" e	7' 8" a	5' 9" a	3' 10" a	9' 8" e	7' 3" e	4' 10" e	7' 8" a	5' 9" a	3' 10" a
1000S200-43	9' 8" e	7' 3" e	4' 10" e	7' 9" a	5' 9" a	3' 10" a	9' 8" e	7' 3" e	4' 10" e	7' 9" a	5' 9" a	3' 10" a
1000S250-43	9' 8" e	7' 3" e	4' 10" e	7' 9" a	5' 9" a	3' 10" a	9' 8" e	7' 3" e	4' 10" e	7' 9" a	5' 9" a	3' 10" a
1000S162-54	14' 4" e	12' 5" e	9' 7" e	12' 9" a	10' 3" a	7' 6" a	13' 0" e	12' 5" e	9' 7" e	12' 9" a	10' 3" a	7' 6" a
1000S200-54	14' 9" e	12' 9" e	9' 7" e	12' 11" a	10' 5" a	7' 7" a	14' 4" e	12' 9" e	9' 7" e	12' 11" a	10' 5" a	7' 7" a
1000S250-54	15' 0" e	13' 0" e	9' 7" e	13' 1" a	10' 6" a	7' 7" a	14' 11" e	13' 0" e	9' 7" e	13' 1" a	10' 6" a	7' 7" a
1000S162-68	16' 3" e	14' 9" e	12' 2" e	17' 3"	14' 11" a	11' 8" a	14' 9" e	13' 5" e	11' 8" e	16' 7"	14' 11" a	11' 8" a
1000S200-68	16' 11" e	15' 5" e	12' 10" e	18' 2"	15' 9" a	12' 0" a	15' 5" e	14' 0" e	12' 2" e	17' 3"	15' 8" a	12' 0" a
1000S250-68	17' 7" e	15' 6" e	12' 8" e	17' 11"	15' 6" a	11' 11" a	16' 0" e	14' 6" e	12' 8" e	17' 11"	15' 6" a	11' 11" a
1000S162-97	18' 1"	16' 5"	14' 4"	20' 3"	16' 5"	15' 7"	16' 5"	14' 11"	13' 0"	16' 5"	16' 5"	14' 7"
1000S200-97	18' 10"	17' 2"	15' 0" e	21' 2"	19' 3"	16' 5"	17' 2"	15' 7"	13' 7"	19' 3"	17' 6"	15' 3"
1000S250-97	19' 8"	17' 10"	15' 7" e	22' 1"	20' 1"	16' 10"	17' 10"	16' 3"	14' 2"	20' 1"	18' 2"	15' 11"
1200S162-54	15' 7" e	12' 0" e	8' 0" e	12' 0" a	9' 7" a	6' 4" a	15' 7" e	12' 0" e	8' 0" e	12' 0" a	9' 7" a	6' 4" a
1200S200-54	16' 0" e	12' 0" e	8' 0" e	12' 2" a	9' 7" a	6' 4" a	16' 0" e	12' 0" e	8' 0" e	12' 2" a	9' 7" a	6' 4" a
1200S250-54	16' 0" e	12' 0" e	8' 0" e	12' 4" a	9' 7" a	6' 4" a	16' 0" e	12' 0" e	8' 0" e	12' 4" a	9' 7" a	6' 4" a
1200S162-68	18' 10" e	16' 4" e	13' 4" e	18' 8" a	15' 2" a	11' 3" a	17' 2" e	15' 7" e	13' 4" e	18' 8" a	15' 2" a	11' 3" a
1200S200-68	19' 8" e	17' 2" e	14' 0" e	19' 1" a	15' 7" a	11' 6" a	17' 11" e	16' 3" e	14' 0" e	19' 1" a	15' 7" a	11' 6" a
1200S250-68	19' 6" e	18' 10" e	13' 9" e	18' 11" a	15' 5" a	11' 5" a	18' 7" e	16' 10" e	13' 9" e	18' 11" a	15' 5" a	11' 5" a
1200S162-97	21' 1"	19' 2"	16' 9" e	23' 8" i	21' 6" i	21' 6" i	17' 11" i	19' 2"	17' 5"	15' 2" e	21' 6" i	17' 1" i
1200S200-97	21' 11"	19' 11"	17' 5" e	24' 8" i	22' 5" i	22' 5" i	18' 9" a	19' 11"	18' 1"	15' 10" e	22' 5" i	17' 9" i
1200S250-97	22' 9"	20' 8"	18' 1" e	25' 7" i	23' 3" i	23' 3" i	19' 2" a	20' 8"	18' 10"	16' 5" e	23' 3" i	18' 5" i

"e" Requires web stiffeners at end supports.
"i" Requires web stiffeners at interior supports.
"a" Requires web stiffeners at all supports.

See page 43 for Allowable Floor Span Table Notes.

HEADER LOAD TABLE NOTES

1. Deflection limit is L/360.
2. Allowable loads have not been modified for wind or earthquake loading.
3. Headers are made from two "boxed" or back-to-back members.
4. Allowable moment, shear and web crippling are based on twice the capacity of a single member. The moment of inertia is based on twice the value of the single member.
5. Bearing length for web crippling = 1" minimum.
6. Values are for unpunched members.
7. Members are assumed to be adequately braced to resist bending.
8. Allowable loads are for simply supported headers with uniform bending loads only.

HEADER ALLOWABLE UNIFORM LOADS (LBS/FT)

Section	Yield Strength (ksi)	SPAN						
		3 (ft)	4 (ft)	5 (ft)	6 (ft)	8 (ft)	10 (ft)	12 (ft)
550S162-33	33	893 e	670 e	536 e	374 e	210 e	127 e	73 e
550S162-43	33	1982 e	1232 e	789 e	547 e	308 e	164 e	95
550S162-54	33	2779 e	1563 e	1000 e	694 c	390 e	203	117
550S162-54	50	3643 e	2049 e	1311 e	910 e	396 e	203	117
550S162-68	33	3514 e	1976 e	1265 e	878 e	488 e	250	144
550S162-68	50	5176 e	2911 e	1863 e	1157 e	488	250	144
600S137-33	33	816 e	612 e	489 e	375 e	209 e	134 e	80 e
600S162-33	33	816 e	612 e	489 e	406 e	237 e	152 e	90 e
600S200-33	33	816 e	612 e	489 e	406 e	254 e	162 e	104 e
600S137-43	33	1810 e	1233 e	789 e	548 e	308 e	178 e	103
600S162-43	33	1810 e	1357 e	889 e	617 e	347 e	202 e	117 e
600S200-43	33	1810 e	1357 e	919 e	638 e	359 e	229 e	135 e
600S250-43	33	1810 e	1357 e	967 e	671 e	377 e	241 e	155 e
600S137-54	33	2812 e	1581 e	1012 e	703 e	395 e	220 e	127
600S162-54	33	3135 e	1783 e	1126 e	783 e	440 e	250 e	144
600S200-54	33	3586 e	2006 e	1283 e	891 e	501 e	290 e	167
600S250-54	33	3392 e	1908 e	1221 e	848 e	477 e	305 e	193 e
600S137-54	50	3610 e	2269 e	1452 e	1008 e	429 e	220	127
600S162-54	50	3610 e	2313 e	1480 e	1028 e	488 e	250	144
600S200-54	50	3610 e	2500 e	1600 e	1111 e	566 e	290 e	167
600S250-54	50	3610 e	2666 e	1706 e	1185 e	641 e	328 e	190
600S137-68	33	3562 e	2004 e	1282 e	890 e	501 e	270	156
600S162-68	33	3968 e	2232 e	1428 e	992 e	558 e	308	178
600S200-68	33	4508 e	2534 e	1622 e	1126 e	633 e	358 e	207
600S250-68	33	4458 e	2506 e	1604 e	1114 e	626 e	401 e	239
600S137-68	50	5274 e	2966 e	1898 e	1252 e	528 e	270	156
600S162-68	50	5846 e	3288 e	2104 e	1426 e	601 e	308	178
600S200-68	50	6475 e	3642 e	2331 e	1618 e	700 e	358	207
600S250-68	50	5954 e	3349 e	2143 e	1488 e	807 e	413 e	239
600S137-97	33	5108 e	2873 e	1839 e	1277 e	715	366	211
600S162-97	33	5685 e	3197 e	2046 e	1421 e	799	419	242
600S200-97	33	6443 e	3624 e	2319 e	1610 e	906 e	490	283
600S250-97	33	7229 e	4066 e	2602 e	1807 e	1016 e	567	328
600S137-97	50	7526 e	4233 e	2709 e	1694 e	715	366	211
600S162-97	50	8403 e	4727 e	3025 e	1941 e	819	419	242
600S200-97	50	9560 e	5377 e	3441 e	2270 e	958	490	283
600S250-97	50	10277 e	5781 e	3700 e	2569 e	1109 e	567	328

"e" Web stiffeners required at supports.

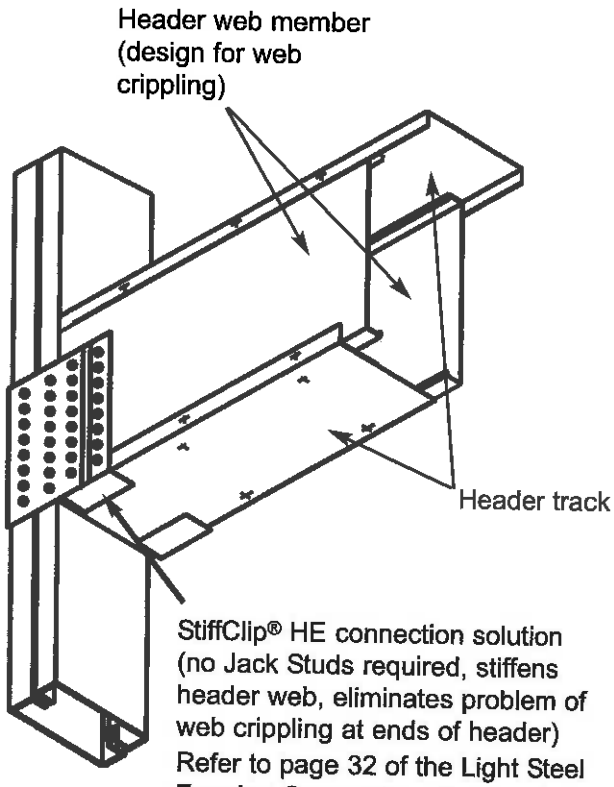

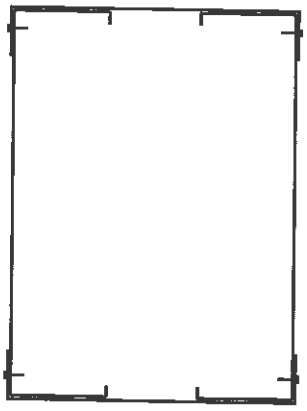

Box Header consists of two stud sections oriented horizontally and capped at top and bottom with tracks connected through track flanges with required fasteners at designed spacing.

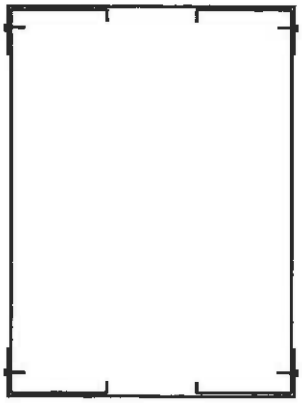

Box Header consists of two stud sections oriented horizontally and capped at top and bottom with tracks connected through track flanges with required fasteners at designed spacing.

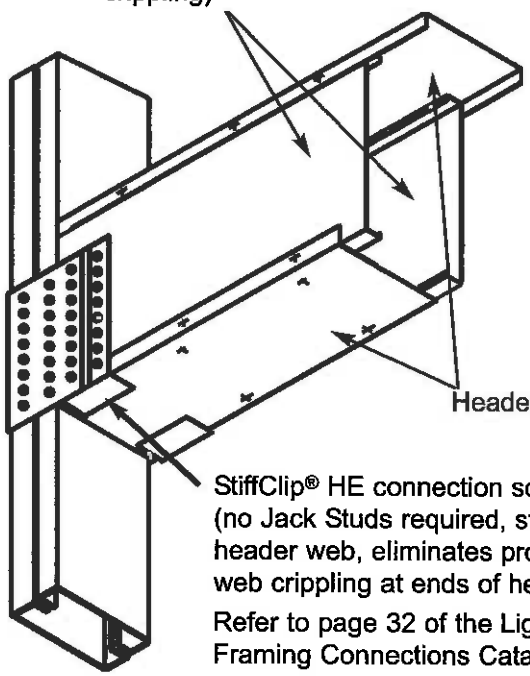

StiffClip® HE connection solution (no Jack Studs required, stiffens header web, eliminates problem of web crippling at ends of header)

Refer to page 32 of the Light Steel Framing Connections Catalog for more information.

HEADER ALLOWABLE UNIFORM LOADS (LBS/FT)

Section	Yield Strength (ksi)	SPAN 3 (ft)	4 (ft)	5 (ft)	6 (ft)	8 (ft)	10 (ft)	12 (ft)
800S137-33	33	606 e	454 e	363 e	303 e	227 e	174 e	121 e
800S162-33	33	606 e	454 e	363 e	303 e	227 e	181 e	138 e
800S200-33	33	606 e	454 e	363 e	303 e	227 e	181 e	148 e
800S137-43	33	1344 e	1008 e	806 e	672 e	425 e	272 e	186 e
800S162-43	33	1344 e	1008 e	806 e	672 e	476 e	305 e	211 e
800S200-43	33	1344 e	1008 e	806 e	672 e	504 e	349 e	238 e
800S250-43	33	1344 e	1008 e	806 e	672 e	504 e	346 e	240 e
800S137-54	33	2674 e	2005 e	1541 e	1070 e	602 e	385 e	258 e
800S162-54	33	2674 e	2005 e	1604 e	1178 e	663 e	424 e	290 e
800S200-54	33	2674 e	2005 e	1604 e	1324 e	744 e	476 e	331 e
800S250-54	33	2674 e	2005 e	1604 e	1252 e	704 e	451 e	313 e
800S137-54	50	2674 e	2005 e	1604 e	1337 e	778 e	446 e	258 e
800S162-54	50	2674 e	2005 e	1604 e	1337 e	871 e	501 e	290 e
800S200-54	50	2674 e	2005 e	1604 e	1337 e	919 e	574 e	332 e
800S250-54	50	2674 e	2005 e	1604 e	1337 e	851 e	508 e	373 e
800S137-68	33	5397 e	3061 e	1959 e	1360 e	765 e	489 e	318 e
800S162-68	33	5397 e	3367 e	2155 e	1496 e	841 e	538 e	358 e
800S200-68	33	5397 e	3774 e	2415 e	1677 e	943 e	603 e	411 e
800S250-68	33	5397 e	3688 e	2360 e	1639 e	922 e	590 e	409 e
800S137-68	50	5397 e	4048 e	2591 e	2014 e	1076 e	550 e	318
800S162-68	50	5397 e	4048 e	3177 e	2206 e	1210 e	619 e	358 e
800S200-68	50	5397 e	4048 e	3238 e	2415 e	1358 e	711 e	411 e
800S250-68	50	5397 e	4048 e	3197 e	2220 e	1249 e	799 e	408 e
800S137-97	33	7865 e	4424 e	2831 e	1966 e	1108 e	707 e	434
800S162-97	33	8632 e	4856 e	3107 e	2158 e	1214 e	777 e	491
800S200-97	33	9647 e	5426 e	3473 e	2411 e	1356 e	868 e	586 e
800S250-97	33	10675 e	6005 e	3843 e	2668 e	1501 e	960 e	646 e
800S137-97	50	11568 e	8516 e	4171 e	2897 e	1467 e	751	434
800S162-97	50	12761 e	7179 e	4594 e	3190 e	1659 e	849 e	491
800S200-97	50	14514 e	8052 e	5153 e	3578 e	1912 e	979 e	566
800S250-97	50	14632 e	8557 e	5477 e	3803 e	2135 e	1117 e	645
1000S162-43	33	1069 e	801 e	641 e	534 e	400 e	320 e	258 e
1000S200-43	33	1069 e	801 e	641 e	534 e	400 e	320 e	267 e
1000S250-43	33	1069 e	801 e	641 e	534 e	400 e	320 e	267 e
1000S162-54	33	2124 e	1593 e	1274 e	1062 e	796 e	624 e	364 e
1000S200-54	33	2124 e	1593 e	1274 e	1062 e	796 e	594 e	412 e
1000S250-54	33	2124 e	1593 e	1274 e	1062 e	796 e	599 e	416 e
1000S162-54	50	2124 e	1593 e	1274 e	1062 e	796 e	637 e	474 e
1000S200-54	50	2124 e	1593 e	1274 e	1062 e	796 e	637 e	500 e
1000S250-54	50	2124 e	1593 e	1274 e	1062 e	796 e	637 e	520 e
[illegible]	[illegible]	[illegible]	[illegible]	[illegible]	[illegible]	[illegible]	[illegible]	[illegible]

"e" Web stiffeners required at supports.

HEADER ALLOWABLE UNIFORM LOADS (LBS/FT)

Section	Yield Strength (ksi)	SPAN 3 (ft)	4 (ft)	5 (ft)	6 (ft)	8 (ft)	10 (ft)	12 (ft)
1000S200-68	33	4278 e	3208 e	2567 e	2139 e	1297 e	830 e	576 e
1000S250-68	33	4278 e	3208 e	2567 e	2139 e	1257 e	804 e	558 e
1000S162-68	50	4278 e	3208 e	2567 e	2139 e	1537 e	984 e	623 e
1000S200-68	50	4278 e	3208 e	2567 e	2139 e	1604 e	1085 e	701 e
1000S250-68	50	4278 e	3208 e	2567 e	2139 e	1604 e	1065 e	740 e
1000S162-97	33	12049 e	6785 e	4343 e	3016 e	1806 e	1085 e	754 e
1000S200-97	33	12049 e	7493 e	4795 e	3330 e	1873 e	1188 e	832 e
1000S250-97	33	12049 e	8199 e	5247 e	3644 e	2049 e	1311 e	911 e
1000S162-97	50	12614 e	9460 e	6420 e	4458 e	2507 e	1483 e	858 e
1000S200-97	50	12614 e	9460 e	7115 e	4941 e	2779 e	1690 e	978 e
1000S250-97	50	12614 e	9460 e	7500 e	5208 e	2929 e	1875 e	1104 e
1200S162-54	33	1761 e	1321 e	1056 e	880 e	660 e	528 e	427 e
1200S200-54	33	1761 e	1321 e	1056 e	880 e	660 e	528 e	440 e
1200S250-54	33	1761 e	1321 e	1056 e	880 e	660 e	528 e	440 e
1200S162-54	50	1761 e	1321 e	1056 e	880 e	660 e	528 e	440 e
1200S200-54	50	1761 e	1321 e	1056 e	880 e	660 e	528 e	440 e
1200S250-54	50	1761 e	1321 e	1056 e	880 e	660 e	528 e	440 e
1200S162-68	33	3543 e	2657 e	2126 e	1771 e	1328 e	857 e	595 e
1200S200-68	33	3543 e	2657 e	2126 e	1771 e	1328 e	1063 e	753 e
1200S250-68	33	3543 e	2657 e	2126 e	1771 e	1328 e	1044 e	726 e
1200S162-68	50	3543 e	2657 e	2126 e	1771 e	1328 e	1063 e	818 e
1200S200-68	50	3543 e	2657 e	2126 e	1771 e	1328 e	1063 e	865 e
1200S250-68	50	3543 e	2657 e	2126 e	1771 e	1328 e	1063 e	872 e
1200S162-97	33	10418 e	7814 e	5751 e	3994 e	2246 e	1438 e	998 e
1200S200-97	33	10418 e	7814 e	6251 e	4365 e	2455 e	1571 e	1091 e
1200S250-97	33	10418 e	7814 e	6251 e	4733 e	2662 e	1704 e	1183 e
1200S162-97	50	10418 e	7814 e	6251 e	5208 e	3321 e	2125 e	1364 e
1200S200-97	50	10418 e	7814 e	[illegible]	[illegible]	3643 e	2331 e	1538 e
1200S250-97	50	10418 e	7814 e	6251 e	5208 e	3815 e	2442 e	1695 e

"e" Web stiffeners required at supports.

WEB-CRIPPLING LOAD TABLE NOTES

1. Only members with stiffened flanges are considered.
2. For multiple members, multiply the listed capacity of a single member by the number of members in the assembly.
3. For back-to-back members table, listed web crippling values are for the total system of two members.
4. For back-to-back members, the distance between the web connectors and the flange shall be kept to a minimum.
5. Web punchouts are not considered for web crippling tables. A web crippling reduction factor is to be applied for web punchouts, per *ICC-ES Acceptance Criteria AC46, Appendix B.*

WEB CRIPPLING CONDITIONS

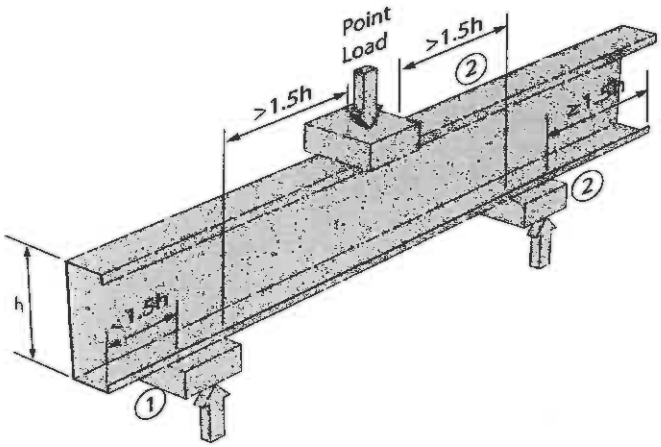

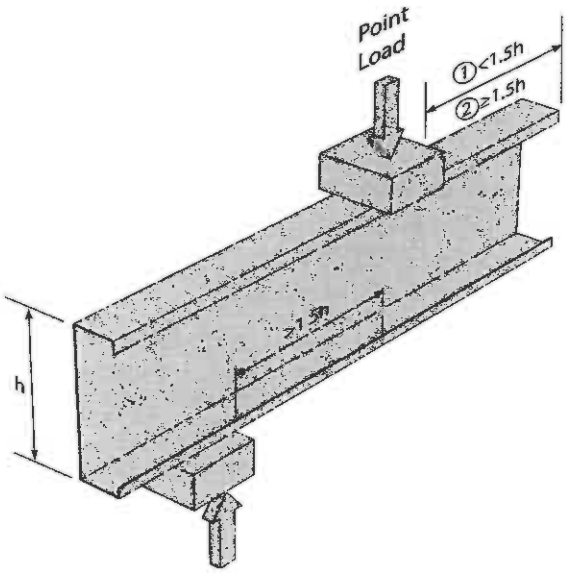

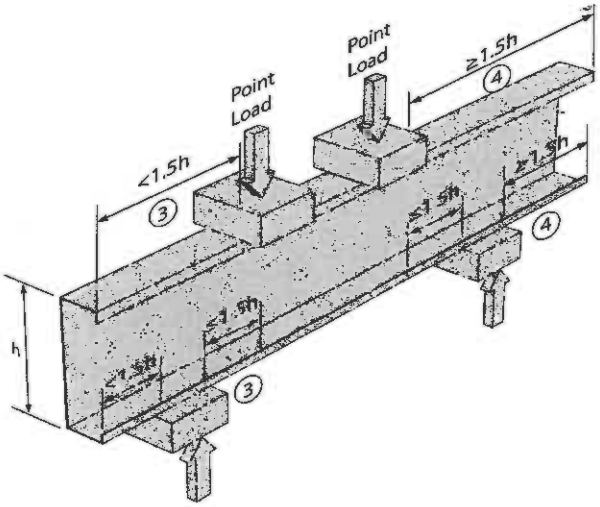

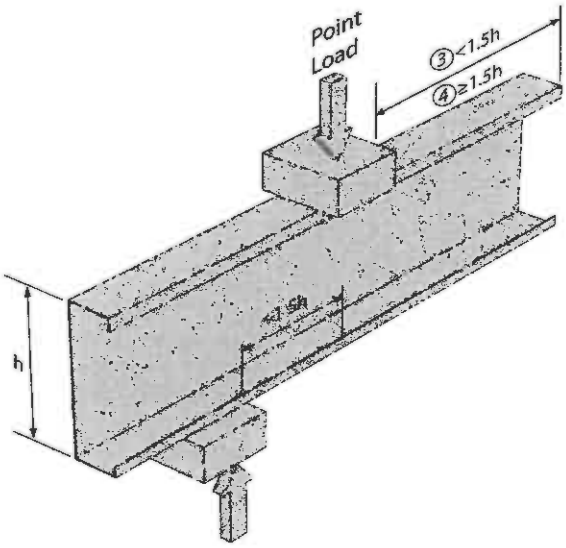

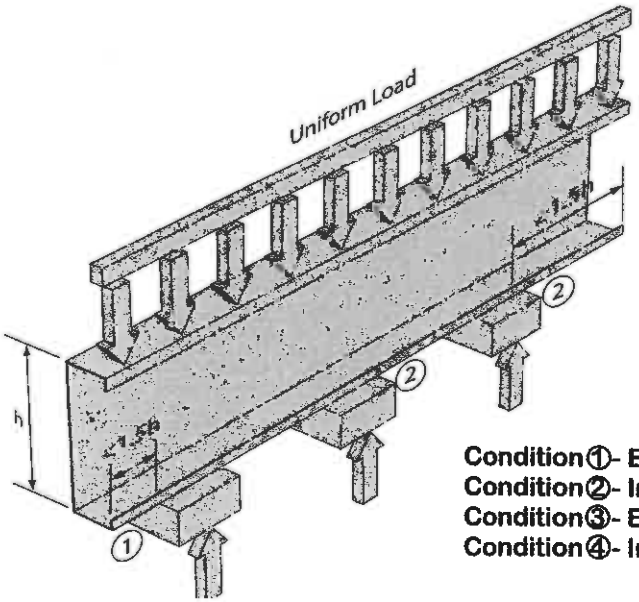

Condition①- End Reaction - One Flange (Point Load > 1.5h from other loads)
Condition②- Interior Reaction - One Flange (Point Load > 1.5h from other loads)
Condition③- End Reaction - Two Flanges (Point Loads ≤ 1.5h from each other)
Condition④- Interior Reaction - Two Flanges (Point Loads ≤ 1.5h from each other)

ALLOWABLE WEB CRIPPLING LOADS (LBS) - SINGLE MEMBER

Web Size	Design Thickness (in)	Thickness (mils)	Yield Strength (ksi)	Condition 1 Bearing Length (in) 1	2.5	4	6	Condition 2 Bearing Length (in) 1	2.5	4	6	Condition 3 Bearing Length (in) 1	2.5	4	6	Condition 4 Bearing Length (in) 1	2.5	4	6
162	0 0188	18	33	42	78	85	114	100	204	225	310	29	55	60	80	97	113	116	128
162	0 0283	27	33	128	212	229	296	241	408	446	596	92	152	164	212	266	295	301	324
162	0 0312	30	33	163	262	282	361	296	479	522	692	117	189	203	260	334	367	374	400
162	0 0346	33	33	209	326	350	444	367	568	616	810	151	235	252	320	423	461	469	500
250	0 0188	18	33	[illegible]	[illegible]	[illegible]	[illegible]	[illegible]	[illegible]	[illegible]	[illegible]	[illegible]	[illegible]	[illegible]	[illegible]	[illegible]	[illegible]	[illegible]	[illegible]
250	0 0283	27	33	[illegible]	199	214	277	280	[illegible]	[illegible]	[illegible]	[illegible]	140	161	[illegible]	238	264	[illegible]	[illegible]
250	0 0312	30	33	[illegible]	[illegible]	[illegible]	[illegible]	[illegible]	[illegible]	[illegible]	584	109	175	188	247	302	332	[illegible]	[illegible]
250	0 0346	33	33	[illegible]	[illegible]	332	[illegible]	[illegible]	547	[illegible]	790	[illegible]	[illegible]	[illegible]	[illegible]	387	423	[illegible]	[illegible]
250	0 0451	43	33	[illegible]	636	[illegible]	798	[illegible]	[illegible]	[illegible]	1178	[illegible]	[illegible]	[illegible]	[illegible]	716	[illegible]	778	[illegible]
250	0 0566	54	33	[illegible]	[illegible]	840	1013	[illegible]	[illegible]	[illegible]	[illegible]	[illegible]	[illegible]	606	[illegible]	[illegible]	[illegible]	[illegible]	[illegible]
250	0 0566	54	50	[illegible]	1091	[illegible]	1274	[illegible]	[illegible]	[illegible]	[illegible]	[illegible]	723	782	921	[illegible]	[illegible]	[illegible]	1952
250	0 0713	68	33	906	[illegible]	[illegible]	1464	[illegible]	1547	[illegible]	[illegible]	[illegible]	[illegible]	[illegible]	[illegible]	[illegible]	[illegible]	2017	[illegible]
250	0 0713	68	50	[illegible]	[illegible]	[illegible]	1841	[illegible]	[illegible]	[illegible]	[illegible]	[illegible]	[illegible]	[illegible]	[illegible]	[illegible]	[illegible]	2701	[illegible]
350	0 0188	18	33	33	61	67	90	85	173	191	263	21	39	43	58	61	70	72	80
350	0 0283	27	33	111	183	198	256	218	368	402	538	76	125	135	175	205	228	232	250
350	0 0312	30	33	144	231	248	318	270	437	476	631	99	159	171	219	266	293	298	319
350	0.0346	33	33	187	291	312	396	338	523	568	746	130	202	217	275	347	378	384	410
350	0 0451	43	33	352	511	543	671	594	824	887	1138	249	361	384	474	663	710	719	756
350	0 0566	54	33	559	768	810	978	936	1191	1272	1596	399	549	579	698	1104	1166	1179	1228
350	0 0566	54	50	702	966	1019	1230	1258	1601	1709	2144	502	690	727	878	1483	1567	1583	1650
350	0.0713	68	33	881	1152	1207	1424	1479	1810	1876	2257	634	829	868	1025	1822	1904	1920	1985
350	0 0713	68	50	1108	1449	1517	1790	1987	2432	2521	3033	798	1043	1092	1288	2448	2558	2580	2667
362	0 0188	18	33	[illegible]	[illegible]	[illegible]	[illegible]	[illegible]	[illegible]	[illegible]	[illegible]	[illegible]	[illegible]	[illegible]	[illegible]	[illegible]	68	[illegible]	[illegible]
362	0 0283	27	33	140	182	[illegible]	[illegible]	[illegible]	[illegible]	[illegible]	[illegible]	76	[illegible]	[illegible]	172	[illegible]	225	[illegible]	[illegible]
362	0 0312	30	33	142	220	[illegible]	315	[illegible]	434	[illegible]	[illegible]	[illegible]	[illegible]	[illegible]	[illegible]	[illegible]	288	293	[illegible]
362	0 0346	33	33	185	[illegible]	310	[illegible]	[illegible]	[illegible]	584	742	[illegible]	[illegible]	[illegible]	[illegible]	342	373	379	404
362	0 0451	43	33	350	[illegible]	[illegible]	[illegible]	[illegible]	[illegible]	[illegible]	1133	[illegible]	[illegible]	[illegible]	471	656	702	711	[illegible]
362	0 0566	54	33	[illegible]	[illegible]	[illegible]	973	[illegible]	[illegible]	[illegible]	1591	[illegible]	546	576	[illegible]	1096	1157	[illegible]	[illegible]
362	0 0566	54	50	[illegible]	962	[illegible]	[illegible]	[illegible]	[illegible]	[illegible]	2187	[illegible]	[illegible]	723	[illegible]	1472	[illegible]	1571	[illegible]
362	0 0713	68	33	[illegible]	[illegible]	[illegible]	[illegible]	1476	1805	1871	[illegible]	[illegible]	828	[illegible]	1030	[illegible]	[illegible]	[illegible]	[illegible]
362	0 0713	68	50	[illegible]	[illegible]	[illegible]	1794	[illegible]	[illegible]	[illegible]	[illegible]	[illegible]	[illegible]	[illegible]	[illegible]	2434	2543	2564	[illegible]
400	0 0283	27	33	106	176	190	245	211	358	390	522	72	118	128	165	189	210	214	231
400	0 0312	30	33	138	222	239	306	263	426	464	615	94	151	163	208	248	273	278	297
400	0 0346	33	33	181	282	302	383	330	511	555	729	124	194	208	263	326	356	362	386
400	0 0451	43	33	344	499	531	655	584	810	872	1119	241	350	372	460	636	680	689	725
400	0 0566	54	33	548	754	795	960	924	1176	1256	1575	389	536	565	682	1070	1130	1142	1190
400	0 0566	54	50	690	948	1000	1207	1241	1580	1687	2116	490	673	710	857	1437	1518	1534	1599
400	0 0713	68	33	869	1136	1190	1404	1464	1791	1857	2234	623	814	853	1006	1779	1859	1875	1939
400	0 0713	68	50	1093	1429	1496	1765	1967	2407	2495	3001	783	1024	1072	1265	2390	2497	2519	2604
400	0 1017	97	33	1761	2155	2234	2550	2971	3450	3545	3928	1275	1560	1617	1845	3809	3929	3953	4049
400	0 1017	97	50	2215	2710	2810	3206	3992	4634	4763	5277	1603	1962	2034	2321	5117	5278	5310	5440
550	0 0283	27	33	[illegible]	[illegible]	[illegible]	[illegible]	[illegible]	[illegible]	[illegible]	475	[illegible]	[illegible]	[illegible]	[illegible]	141	[illegible]	[illegible]	[illegible]
550	0 0312	30	33	123	[illegible]	212	[illegible]	242	392	427	[illegible]	78	128	137	176	194	213	217	232
550	0 0346	33	33	162	254	272	345	307	475	516	678	107	167	179	227	265	288	294	314
550	0 0451	43	33	319	[illegible]	492	[illegible]	554	[illegible]	827	1061	218	316	336	415	554	592	600	[illegible]
550	0 0566	54	33	518	712	751	907	887	1129	1205	1512	361	[illegible]	523	622	[illegible]	1021	[illegible]	1075
550	0 0566	54	50	651	[illegible]	945	1140	1191	[illegible]	[illegible]	[illegible]	454	624	658	795	[illegible]	1372	1388	1445
550	0 0713	68	33	832	1085	1139	1343	1419	1738	[illegible]	2185	588	786	805	950	1650	1724	1738	1796
550	0 0713	68	50	1046	1368	1432	1689	1906	2332	2417	2908	739	967	1012	1194	2217	2316	2336	2415
550	0 1017	97	33	1710	2093	2169	2476	2908	3376	3470	3844	1227	1502	1557	1776	[illegible]	3740	3763	3854
550	0 1017	97	50	[illegible]	[illegible]	[illegible]	[illegible]	3907	4538	[illegible]	[illegible]	[illegible]	[illegible]	1958	2254	4871	5024	5055	[illegible]
600	0 0312	30	33	117	188	203	260	235	381	415	550	74	120	129	165	176	193	197	211
600	0 0346	33	33	156	244	262	332	299	463	503	661	102	159	170	216	245	267	272	289
600	0 0451	43	33	310	451	479	592	544	755	812	1042	210	305	324	400	526	563	571	600
600	0.0566	54	33	508	698	736	889	874	1113	1189	1491	351	483	510	615	933	985	995	1037
600	0 0566	54	50	639	878	926	1118	1175	1495	1597	2003	442	608	641	774	1253	1323	1337	1394
600	0 0713	68	33	819	1071	1122	1323	1403	1717	1780	2141	576	754	789	931	1607	1679	1693	1751
600	0 0713	68	50	1031	1347	1411	1664	1885	2307	2391	2877	725	948	992	1171	2159	2256	2275	2352
600	0 1017	97	33	1693	2072	2148	2451	2887	3352	3445	3817	1211	1482	1536	1753	3565	3677	3700	3789
600	0 1017	97	50	2129	2606	2701	3082	3878	4503	4628	5127	1523	1864	1932	2205	4789	4940	4970	5091

See page 51 for Web Crippling Table Notes

JOIST

3 1/2" STUD

4" STUD

* ALL GREATER THAN 563# TOTAL LOAD = 1.0DL + 1.0LL

ALLOWABLE WEB CRIPPLING LOADS (LBS) - SINGLE MEMBERS

Web Size	Design Thickness (in)	Thickness (mils)	Yield Stress (ksi)	Condition 1 Bearing Length (in.)				Condition 2 Bearing Length (in.)				Condition 3 Bearing Length (in.)				Condition 4 Bearing Length (in.)			
				1	3.5	4	6	1	3.5	4	6	1	3.5	4	6	1	3.5	4	6
800	0.0451	43	33	277	403	428	529	503	699	752	964	179	260	276	341	417	446	452	475
800	0.0566	54	33	467	642	678	818	825	1050	1121	1407	313	431	455	549	795	840	849	885
800	0.0566	54	50	587	808	852	1028	1108	1411	1507	1890	394	542	572	690	1069	1129	1140	1188
800	0.0713	68	33	770	1007	1054	1243	1343	1643	1703	2049	530	693	726	856	1436	1499	1512	1564
800	0.0713	68	50	[illegible]	1766	1825	1964	1904	2277	2366	2762	867	872	913	1077	1926	2014	2031	2101
800	0.1017	97	33	1625	1989	2061	2257	2803	3254	3344	3705	1147	1404	1456	1661	3320	3425	3446	3530
800	0.1017	97	50	2043	2501	2592	2958	3765	4371	4492	4977	1443	1766	1831	2089	4461	4601	4630	4742
1000	0.0566	54	33	427	567	619	747	776	987	1054	1323	275	379	400	482	658	695	702	732
1000	0.0566	54	50	536	738	778	939	1042	1326	1416	1777	346	476	502	606	864	914	944	983
1000	0.0713	68	33	720	942	986	1163	1262	1606	1628	1956	464	633	662	781	1263	1320	1331	1376
1000	0.0713	68	50	[illegible]	[illegible]	[illegible]	[illegible]	1722	2107	2184	2628	608	796	833	983	1667	1773	1786	1849
1000	0.1017	97	33	[illegible]	[illegible]	[illegible]	[illegible]	2718	3156	3243	3593	1064	1396	1375	1565	3076	3173	3193	3270
1000	0.1017	97	50	1958	2396	2484	2834	3652	4240	4357	4828	1363	1668	1729	1973	4133	4263	4289	4394
1200	0.0713	68	33	671	877	918	1083	1221	1494	1549	1863	437	572	599	706	1091	1140	1150	1189
1200	0.0713	68	50	843	1103	1155	1362	1641	2007	2081	2503	550	719	753	888	1466	1531	1544	1597
1200	0.1017	97	33	1489	1822	1888	2155	2634	3058	3143	3482	1020	1248	1294	1477	2832	2922	2939	3011
1200	0.1017	97	50	1872	2291	2375	2710	3538	4108	4222	4678	1283	1570	1627	1857	3805	3925	3949	4045

See page 51 for Web Crippling Table Notes.

ALLOWABLE WEB CRIPPLING LOADS (LBS) - BACK TO BACK MEMBERS

Web Size	Design Thickness (in)	Thickness in mils	Yield Stress (ksi)	Condition 1 Bearing Length (in.)				Condition 2 Bearing Length (in.)				Condition 3 Bearing Length (in.)				Condition 4 Bearing Length (in.)			
				1	3.5	4	6	1	3.5	4	6	1	3.5	4	6	1	3.5	4	6
162	0.0188	18	33	246	348	362	416	394	604	636	744	142	202	210	242	382	586	616	720
162	0.0283	27	33	492	674	700	794	806	1200	1260	1464	322	442	458	520	796	1184	1242	1444
162	0.0312	30	33	582	792	822	930	958	1418	1486	1722	392	532	554	626	946	1400	1468	1702
162	0.0346	33	33	696	940	976	1102	1152	1692	1772	2050	482	652	676	764	1140	1676	1754	2030
250	0.0188	18	33	260	366	382	438	394	604	636	744	134	190	198	226	354	544	572	670
250	0.0283	27	33	510	700	728	826	806	1200	1260	1464	310	424	440	500	778	1160	1216	1412
250	0.0312	30	33	602	820	852	964	958	1418	1486	1722	378	514	534	604	936	1386	1454	1688
250	0.0346	33	33	716	970	1008	1138	1152	1692	1772	2050	468	632	656	740	1140	1676	1754	2030
250	0.0451	43	33	1138	1504	1560	1748	1860	2676	2798	3220	812	1074	1114	1248	1852	2666	2786	3206
250	0.0566	54	33	1696	2286	2382	2544	2824	3994	4168	4774	1318	1712	1770	1974	2828	4000	4174	4780
250	0.0566	54	50	2570	3342	3456	3854	3060	4332	4520	5176	1318	1712	1770	1974	2828	4000	4174	4780
250	0.0713	68	33	2562	3272	3378	3746	4350	6046	6298	7174	2176	2780	2870	3182	4388	6100	6352	7236
250	0.0713	68	50	3852	4660	5118	5576	4716	6556	6828	7778	2176	2780	2870	3182	4388	6100	6352	7236
350	0.0188	18	33	268	378	396	452	394	604	636	744	124	176	184	210	324	496	522	612
350	0.0283	27	33	532	730	758	860	806	1200	1260	1464	294	404	420	478	736	1096	1150	1336
350	0.0312	30	33	626	852	884	1002	958	1418	1486	1722	362	492	512	580	892	1320	1382	1604
350	0.0346	33	33	744	1004	1044	1178	1152	1692	1772	2050	450	608	632	712	1092	1604	1680	1944
350	0.0451	43	33	1170	1546	1602	1798	1860	2676	2798	3220	790	1044	1082	1214	1834	2642	2762	3178
350	0.0566	54	33	1734	2256	2332	2600	2824	3994	4168	4774	1288	1674	1732	1932	2828	4000	4174	4780
350	0.0566	54	50	2628	3416	3534	3940	3060	4332	4520	5176	1288	1674	1732	1932	2828	4000	4174	4780
350	0.0713	68	33	2608	3332	3440	3814	4350	6046	6298	7174	2138	2732	2820	3128	4388	6100	6352	7236
350	0.0713	68	50	3952	5048	5210	5778	4716	6556	6828	7778	2138	2732	2820	3128	4388	6100	6352	7236

See page 51 for Web Crippling Table Notes.

ALLOWABLE WEB CRIPPLING LOADS (LBS) - BACK TO BACK MEMBERS

Web Size	Design Thickness (in)	Thickness (mils)	Yield Stress (ksi)	Condition 1 Bearing Length (in)				Condition 2 Bearing Length (in)				Condition 3 Bearing Length (in)				Condition 4 Bearing Length (in)			
				1	3.5	4	8	1	3.5	4	8	1	3.5	4	8	1	3.5	4	8
362	0.0188	18	33	268	378	396	452	394	604	636	744	124	174	182	208	320	490	516	604
362	0.0283	27	33	534	734	762	866	806	1200	1260	1464	294	402	418	474	730	1088	1142	1326
362	0.0312	30	33	628	856	888	1006	958	1418	1486	1722	360	490	510	576	886	1310	1374	1594
362	0.0346	33	33	748	1008	1048	1182	1152	1692	1772	2050	448	604	628	710	1086	1594	1670	1934
362	0.0451	43	33	1174	1552	1608	1804	1860	2676	2798	3220	766	1040	1076	1216	1826	2680	2790	3164
362	0.0566	54	33	1740	2262	2338	2608	2824	3994	4168	4774	1284	1670	1728	1926	2828	4000	4174	4780
362	0.0566	54	50	3636	3426	3544	3952	3060	4332	4520	5176	1284	1670	1728	1926	2828	4000	4174	4780
362	0.0713	68	33	2614	3340	3446	3822	4350	6046	6298	7174	2134	2726	2814	3120	4388	6100	6352	7236
362	0.0713	68	50	3960	5060	5222	5790	4716	6556	6828	7778	2134	2726	2814	3120	4388	6100	6352	7236
400	0.0283	27	33	542	744	774	878	806	1200	1260	1464	288	394	410	465	714	1066	1118	1298
400	0.0312	30	33	638	868	902	1020	958	1418	1486	1722	354	482	502	568	868	1286	1348	1562
400	0.0346	33	33	756	1022	1060	1198	1152	1692	1772	2050	442	596	620	698	1068	1568	1642	1900
400	0.0451	43	33	1186	1568	1624	1822	1860	2676	2798	3220	778	1030	1066	1196	1804	2598	2714	3124
400	0.0566	54	33	1754	2280	2358	2630	2824	3994	4168	4774	1274	1656	1712	1910	2828	4000	4174	4780
400	0.0566	54	50	2658	3454	3572	3984	3060	4332	4520	5176	1274	1656	1712	1910	2828	4000	4174	4780
400	0.0713	68	33	2630	3362	3470	3846	4350	6046	6298	7174	2120	2708	2796	3100	4388	6100	6352	7236
400	0.0713	68	50	3986	5092	5258	5828	4716	6556	6828	7778	2120	2708	2796	3100	4388	6100	6352	7236
400	0.1017	97	33	4968	6186	6368	6996	8606	11638	12088	13654	4736	5898	6070	6670	8798	11898	12358	13958
400	0.1017	97	50	7528	9374	9648	10600	9332	12618	13106	14802	4736	5898	6070	6670	8798	11898	12358	13958
550	0.0283	27	33	552	768	798	894	806	1200	1260	1464	268	366	380	432	652	970	1018	1182
550	0.0312	30	33	658	896	932	1054	958	1418	1486	1722	330	450	468	530	800	1184	1242	1440
550	0.0346	33	33	792	1070	1112	1254	1152	1692	1772	2050	416	562	582	658	994	1456	1528	1768
550	0.0451	43	33	1232	1630	1688	1894	1860	2676	2798	3220	744	984	1020	1144	1712	2464	2576	2984
550	0.0566	54	33	1810	2354	2434	2714	2824	3994	4168	4774	1230	1600	1654	1846	2718	3846	4014	4596
550	0.0566	54	50	2744	3586	3688	4114	3060	4332	4520	5176	1230	1600	1654	1846	2718	3846	4014	4596
550	0.0713	68	33	2700	3450	3560	3946	4350	6046	6298	7174	2064	2638	2722	3018	4350	6046	6300	7174
550	0.0713	68	50	4090	5226	5398	5982	4716	6556	6828	7778	2064	2638	2722	3018	4350	6046	6300	7174
550	0.1017	97	33	5062	6304	6488	7128	8606	11638	12088	13654	4650	5792	5960	6550	8798	11898	12358	13958
550	0.1017	97	50	7670	9550	9830	10800	9332	12618	13106	14802	4650	5792	5960	6550	8798	11898	12358	13958
600	0.0312	30	33	658	896	932	1054	958	1418	1486	1722	324	440	456	518	778	1150	1206	1398
600	0.0346	33	33	792	1070	1112	1254	1152	1692	1772	2050	406	550	570	644	968	1422	1490	1724
600	0.0451	43	33	1248	1650	1710	1918	1860	2676	2798	3220	734	970	1004	1128	1680	2420	2530	2910
600	0.0566	54	33	1830	2378	2460	2744	2824	3994	4168	4774	1216	1582	1636	1824	2680	3794	3958	4532
600	0.0566	54	50	2772	3604	3728	4156	3060	4332	4520	5176	1216	1582	1636	1824	2680	3794	3958	4532
600	0.0713	68	33	2722	3478	3592	3982	4350	6046	6298	7174	2046	2614	2698	2990	4304	5984	6232	7098
600	0.0713	68	50	4126	5272	5442	6032	4716	6556	6828	7778	2046	2614	2698	2990	4304	5984	6232	7098
600	0.1017	97	33	5094	6342	6528	7172	8606	11638	12088	13654	4622	5756	5924	6508	8798	11898	12358	13958
600	0.1017	97	50	7716	9610	9890	10866	9332	12618	13106	14802	4622	5756	5924	6508	8798	11898	12358	13958
800	0.0451	43	33	1280	1692	1754	1966	1860	2676	2798	3220	688	910	944	1056	1556	2242	2344	2696
800	0.0566	54	33	1906	2476	2562	2856	2824	3994	4168	4774	1158	1506	1558	1738	2530	3580	3736	4278
800	0.0566	54	50	2888	3754	3882	4330	3060	4332	4520	5176	1158	1506	1558	1738	2530	3580	3736	4278
800	0.0713	68	33	2816	3596	3712	4116	4350	6046	6298	7174	1970	2516	2600	2882	4116	5726	5964	6794
800	0.0713	68	50	4266	5450	5626	6236	4716	6556	6828	7778	1970	2516	2600	2882	4116	5726	5964	6794
800	0.1017	97	33	5218	6498	6688	7346	8606	11638	12088	13654	4508	5614	5778	6346	8704	11770	12226	13808
800	0.1017	97	50	7906	9844	10132	11132	9332	12618	13106	14802	4508	5614	5778	6346	8704	11770	12226	13808
1000	0.0566	54	33	1936	2516	2602	2902	2824	3994	4168	4774	1102	1432	1480	1652	2380	3368	3514	4024
1000	0.0566	54	50	2932	3812	3942	4396	3060	4332	4520	5176	1102	1432	1480	1652	2380	3368	3514	4024
1000	0.0713	68	33	2908	3714	3834	4250	4350	6046	6298	7174	1896	2422	2500	2772	3934	5468	5696	6488
1000	0.0713	68	50	4404	5628	5810	6440	4716	6556	6828	7778	1896	2422	2500	2772	3934	5468	5696	6488
1000	0.1017	97	33	5342	6652	6846	7522	8606	11638	12088	13654	4394	5470	5630	6186	8444	11418	11860	13396
1000	0.1017	97	50	8094	10080	10374	11398	9332	12618	13106	14802	4394	5470	5630	6186	8444	11418	11860	13396
1200	0.0713	68	33	2956	3776	3898	4322	4350	6046	6298	7174	1822	2328	2402	2664	3748	5212	5428	6182
1200	0.0713	68	50	4478	5722	5908	6546	4716	6556	6828	7778	1822	2328	2402	2664	3748	5212	5428	6182
1200	0.1017	97	33	5466	6808	7008	7698	8606	11638	12088	13654	4278	5328	5484	6026	8184	11066	11484	12982
1200	0.1017	97	50	8282	10314	10616	11664	9332	12618	13106	14802	4278	5328	5484	6026	8184	11066	11484	12982

See page 51 for Web Crippling Table Notes.

CEILING SPAN TABLE NOTES

1. Values are for single spans.
2. Allowable ceiling span calculations based on 33ksi yield strength steel.
3. For fully-braced ceilings, use mid-span braced values.
4. End bearing length = 1" minimum.

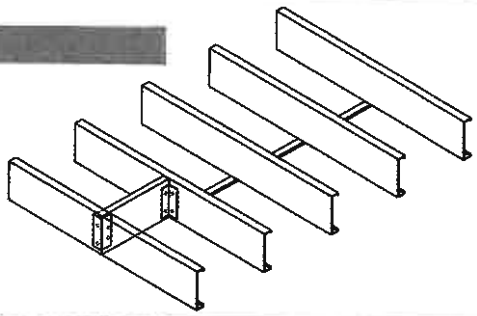

ALLOWABLE CEILING SPANS - DEFLECTION LIMIT L/240

Section	Thickness (mils)	4 psf Lateral Support of Compression Flange: Unsupported, Joist Spacing (in) o.c. 12	16	24	Midspan, Joist Spacing (in) o.c. 12	16	24	8 psf Lateral Support of Compression Flange: Unsupported, Joist Spacing (in) o.c. 12	16	24	Midspan, Joist Spacing (in) o.c. 12	16	24	13 psf Lateral Support of Compression Flange: Unsupported, Joist Spacing (in) o.c. 12	16	24	Midspan, Joist Spacing (in) o.c. 12	16	24
162S125	18	7' 2"	6' 6"	5' 11"	8' 2"	7' 5"	6' 6"	6' 5"	5' 11"	5' 2"	7' 2"	6' 6"	5' 8"	5' 0"	4' 6"	3' 10"e	5' 6"	5' 0"e	4' 1"e
	27	8' 7"	7' 11"	7' 1"	9' 7"	8' 9"	7' 7"	7' 8"	7' 1"	6' 2"	8' 5"	7' 7"	6' 8"	6' 0"	6' 5"	4' 8"	6' 6"	5' 11"	5' 1"
	30	9' 0"	8' 3"	7' 4"	9' 11"	9' 0"	7' 10"	8' 0"	7' 4"	6' 6"	8' 8"	7' 10"	6' 10"	6' 4"	5' 9"	4' 11"	6' 8"	6' 1"	5' 3"
	33	9' 6"	8' 8"	7' 8"	10' 3"	9' 4"	8' 1"	8' 4"	7' 8"	6' 10"	8' 11"	8' 1"	7' 1"	6' 8"	6' 1"	5' 3"	6' 11"	6' 3"	5' 6"
162S137	27	9' 11"	9' 2"	8' 0"	10' 7"	9' 1"	8' 0"	8' 10"	8' 0"	7' 3"	8' 10"	8' 0"	7' 0"	6' 9"	6' 2"	5' 5"	6' 9"	6' 2"	5' 5"
	33	10' 9"	9' 9"	8' 5"	10' 9"	9' 9"	8' 6"	9' 4"	8' 6"	7' 5"	9' 4"	8' 6"	7' 5"	7' 3"	6' 7"	5' 9"	7' 3"	6' 7"	5' 9"
250S125	18	8' 4"	7' 8"	6' 9"	11' 4"	10' 3"	9' 0"	7' 4"	6' 9"	6' 1"	9' 10"	9' 0"	7' 8"e	5' 11"e	5' 6"e	4' 9"e	7' 5"e	6' 6"e	5' 5"e
	27	9' 8"	8' 11"	7' 11"	13' 3"	12' 1"	10' 6"	8' 7"	7' 11"	7' 1"	11' 7"	10' 6"	9' 2"	6' 11"	6' 5"	5' 8"	8' 11"	7' 11"	6' 8"
	30	10' 0"	9' 3"	8' 3"	13' 9"	12' 5"	10' 11"	8' 11"	8' 3"	7' 4"	12' 0"	10' 11"	9' 6"	7' 2"	6' 8"	5' 11"	9' 3"	8' 4"	7' 0"
	33	10' 5"	9' 7"	8' 7"	14' 2"	12' 10"	11' 3"	9' 3"	8' 7"	7' 7"	12' 5"	11' 3"	9' 10"	7' 5"	6' 10"	6' 2"	9' 7"	8' 8"	7' 6"
	43	11' 9"	10' 3"	9' 6"	15' 5"	14' 0"	12' 3"	10' 5"	9' 6"	8' 5"	13' 6"	12' 3"	10' 8"	8' 3"	7' 7"	6' 9"	10' 5"	9' 5"	8' 3"
250S137	27	10' 11"	10' 1"	9' 1"	14' 5"	12' 8"	11' 1"	9' 10"	9' 1"	8' 2"	12' 2"	11' 1"	9' 8"	8' 0"	7' 5"	6' 7"	9' 5"	8' 7"	7' 6"
	33	11' 9"	10' 10"	9' 8"	14' 11"	13' 6"	11' 10"	10' 6"	9' 8"	8' 8"	13' 0"	11' 10"	10' 4"	8' 6"	7' 10"	7' 0"	10' 0"	9' 1"	8' 0"
	43	13' 2"	12' 1"	10' 6"	16' 2"	14' 8"	12' 10"	11' 8"	10' 9"	9' 7"	14' 2"	12' 10"	11' 2"	9' 4"	8' 7"	7' 8"	10' 11"	9' 11"	8' 8"
250S162	33	13' 5"	12' 5"	11' 1"	15' 8"	14' 2"	12' 5"	12' 0"	11' 1"	9' 11"	13' 8"	12' 5"	10' 10"	9' 9"	9' 0"	8' 0"	10' 7"	9' 7"	8' 4"
	43	14' 11"	13' 9"	12' 3"	17' 0"	15' 5"	13' 6"	13' 3"	12' 3"	10' 11"	14' 10"	13' 6"	11' 9"	10' 8"	9' 10"	8' 9"	11' 6"	10' 5"	9' 1"
350S125	18	9' 4"	8' 8"	7' 8"	13' 1"	12' 1"	10' 0"e	8' 4"	7' 8"	6' 10"e	11' 8"e	10' 8"e	9' 2"e	6' 8"e	6' 2"e	5' 8"e	8' 10"e	7' 10"e	6' 8"e
	27	10' 7"	9' 9"	8' 9"	15' 1"	14' 0"	12' 5"	9' 6"	8' 9"	7' 10"	13' 6"	12' 5"	10' 11"	7' 5"	7' 1"	6' 5"	10' 7"	9' 8"	8' 1"
	30	10' 11"	10' 1"	9' 0"	15' 6"	14' 4"	12' 11"	9' 9"	9' 0"	8' 1"	13' 11"	12' 11"	11' 5"	7' 11"	7' 4"	6' 7"	11' 1"	10' 0"	8' 5"
	33	11' 4"	10' 6"	9' 4"	16' 1"	14' 10"	13' 4"	10' 1"	9' 4"	8' 5"	14' 5"	13' 4"	11' 11"	8' 2"	7' 7"	6' 9"	11' 8"	10' 3"	9' 0"
	43	12' 7"	11' 7"	10' 4"	17' 8"	16' 3"	14' 5"	11' 2"	10' 4"	9' 2"	16' 9"	14' 6"	13' 0"	9' 0"	8' 3"	7' 5"	12' 8"	11' 8"	10' 2"
350S137	27	11' 11"	11' 1"	9' 11"	17' 3"	16' 0"	14' 4"	10' 9"	9' 11"	8' 11"	15' 6"	14' 4"	12' 6"	8' 9"	8' 2"	7' 4"	12' 2"	11' 0"	9' 4"e
	33	12' 9"	11' 10"	10' 7"	18' 3"	16' 11"	15' 2"	11' 5"	10' 7"	9' 6"	16' 5"	15' 2"	13' 4"	9' 4"	8' 7"	7' 9"	13' 0"	11' 10"	10' 3"
	43	14' 2"	13' 0"	11' 7"	19' 11"	18' 5"	16' 6"	12' 7"	11' 7"	10' 4"	17' 10"	16' 6"	14' 6"	10' 2"	9' 4"	8' 5"	14' 2"	12' 10"	11' 3"
350S162	33	14' 7"	13' 6"	12' 1"	20' 3"	18' 5"	16' 1"	13' 0"	12' 1"	10' 10"	17' 8"	16' 1"	14' 0"	10' 7"	9' 10"	8' 10"	13' 8"	12' 5"	10' 10"
	43	16' 0"	14' 9"	13' 2"	22' 0"	20' 0"	17' 8"	14' 4"	13' 2"	11' 10"	19' 3"	17' 6"	15' 3"	11' 7"	10' 8"	9' 7"	14' 10"	13' 6"	11' 9"
362S125	18	9' 5"	8' 9"	7' 9"	13' 3"	12' 3"e	10' 10"e	8' 6"	7' 9"	6' 11"e	11' 10"e	10' 10"e	9' 3"e	6' 9"e	6' 2"e	5' 7"e	9' 0"e	7' 11"e	6' 7"e
	27	10' 8"	9' 11"	8' 10"	15' 3"	14' 2"	12' 7"	9' 7"	8' 10"	7' 11"	13' 8"	12' 7"	11' 1"	7' 9"	7' 2"	6' 6"	10' 9"	9' 8"	8' 3"
	30	11' 0"	10' 2"	9' 2"	15' 8"	14' 6"	13' 1"	9' 10"	9' 2"	8' 2"	14' 1"	13' 1"	11' 7"	8' 0"	7' 5"	6' 8"	11' 3"	10' 2"	8' 9"
	33	11' 5"	10' 7"	9' 5"	16' 3"	15' 0"	13' 6"	10' 3"	9' 5"	8' 6"	14' 6"	13' 6"	12' 1"	8' 3"	7' 8"	6' 10"	11' 9"	10' 9"	9' 2"
	43	12' 9"	11' 8"	10' 5"	17' 9"	16' 5"	14' 8"	11' 4"	10' 5"	9' 3"	15' 11"	14' 8"	13' 1"	9' 1"	8' 4"	7' 6"	12' 10"	11' 9"	10' 4"
362S137	27	12' 1"	11' 2"	10' 1"	17' 5"	16' 2"	14' 6"	10' 10"	10' 1"	9' 1"	15' 8"	14' 6"	12' 10"	8' 10"	8' 3"	7' 5"	12' 8"	11' 2"	9' 6"e
	33	12' 11"	11' 11"	10' 8"	18' 6"	17' 1"	15' 4"	11' 7"	10' 8"	9' 7"	16' 7"	15' 4"	13' 8"	9' 5"	8' 8"	7' 10"	13' 4"	12' 2"	10' 6"
	43	14' 3"	13' 2"	11' 9"	20' 1"	18' 7"	16' 7"	12' 8"	11' 9"	10' 5"	18' 0"	16' 7"	14' 10"	10' 3"	9' 5"	8' 5"	14' 6"	13' 3"	11' 6"
362S162	33	14' 8"	13' 7"	12' 2"	20' 9"	18' 11"	16' 6"	13' 2"	12' 2"	10' 11"	18' 2"	16' 6"	14' 5"	10' 9"	9' 11"	8' 11"	14' 0"	12' 9"	11' 1"
	43	16' 2"	14' 11"	13' 4"	22' 7"	20' 7"	17' 11"	14' 5"	13' 4"	11' 11"	19' 9"	17' 11"	15' 8"	11' 6"	10' 9"	9' 8"	15' 3"	13' 10"	12' 1"
400S125	27	11' 0"	10' 2"	9' 1"	15' 8"	14' 7"	13' 1"	9' 10"	9' 1"	8' 2"	14' 2"	13' 1"	11' 7"	8' 0"	7' 5"	6' 8"	11' 3"	10' 2"	8' 6"e
	30	11' 4"	10' 6"	9' 5"	16' 2"	15' 0"	13' 5"	10' 2"	9' 5"	8' 5"	14' 6"	13' 5"	12' 0"	8' 3"	7' 6"	6' 10"	11' 9"	10' 5"	9' 2"
	33	11' 9"	10' 10"	9' 8"	16' 9"	15' 6"	13' 10"	10' 6"	9' 9"	8' 6"	15' 0"	13' 10"	12' 5"	8' 6"	7' 11"	7' 1"	12' 2"	11' 2"	9' 3"
	43	13' 0"	12' 0"	10' 8"	18' 3"	16' 10"	15' 1"	11' 7"	10' 8"	9' 5"	16' 4"	15' 1"	13' 6"	9' 4"	8' 7"	7' 8"	13' 3"	12' 2"	10' 9"
400S137	27	12' 5"	11' 6"	10' 4"	17' 11"	16' 7"	15' 0"	11' 2"	10' 4"	9' 4"	16' 2"	15' 0"	13' 4"	9' 1"	8' 5"	7' 7"	13' 0"	11' 9"	10' 0"e
	33	13' 3"	12' 3"	11' 0"	18' 11"	17' 7"	15' 10"	11' 10"	11' 0"	9' 10"	17' 0"	15' 10"	14' 2"	9' 8"	8' 11"	8' 1"	13' 10"	12' 8"	11' 0"
	43	14' 7"	13' 6"	12' 0"	20' 7"	19' 1"	17' 1"	13' 0"	12' 0"	10' 9"	18' 5"	17' 1"	15' 4"	10' 6"	9' 8"	8' 8"	15' 0"	13' 9"	12' 1"
400S162	33	15' 1"	13' 11"	12' 8"	21' 8"	20' 1"	17' 8"	13' 8"	12' 8"	11' 3"	19' 8"	17' 10"	15' 6"	11' 0"	10' 3"	9' 3"	15' 2"	13' 9"	12' 0"
	43	16' 7"	15' 3"	13' 8"	23' 5"	21' 8"	19' 4"	14' 8"	13' 8"	12' 2"	21' 0"	19' 4"	16' 11"	11' 11"	11' 1"	9' 11"	16' 6"	14' 11"	13' 1"
600S125	27	12' 4"e	11' 5"e	10' 4"e	17' 10"e	16' 7"e	14' 11"e	11' 1"e	10' 4"e	9' 3"e	16' 1"e	14' 11"e	13' 5"e	9' 1"e	8' 5"e	7' 7"e	13' 2"e	12' 2"e	10' 9"e
	30	12' 9"	11' 9"	10' 7"	18' 4"	17' 0"	15' 4"	11' 5"	10' 7"	9' 6"	16' 6"	15' 4"	13' 9"	9' 4"	8' 8"	7' 10"	13' 6"	12' 6"	11' 2"e
	33	13' 2"	12' 2"	10' 11"	18' 10"	17' 6"	15' 9"	11' 9"	10' 11"	9' 10"	17' 0"	15' 9"	14' 2"	9' 7"	8' 11"	8' 0"	13' 10"	12' 10"	11' 7"
	43	14' 5"	13' 3"	11' 10"	20' 5"	18' 11"	16' 11"	12' 10"	11' 10"	10' 7"	18' 4"	16' 11"	15' 3"	10' 5"	9' 7"	8' 7"	14' 11"	13' 10"	12' 5"
600S137	33	14' 10"	13' 9"	12' 4"	21' 4"	19' 10"	17' 10"	13' 8"	12' 4"	11' 1"	19' 2"	17' 10"	15' 7"	10' 10"	10' 1"	9' 1"	15' 8"	14' 7"	13' 1"
	43	16' 2"	14' 11"	13' 4"	23' 0"	21' 4"	19' 2"	14' 8"	13' 4"	12' 0"	20' 8"	19' 2"	17' 3"	11' 9"	10' 10"	9' 9"	16' 10"	15' 8"	14' 1"
600S162	33	16' 10"	15' 7"	14' 0"	24' 4"	22' 7"	20' 4"	15' 2"	14' 0"	12' 8"	21' 11"	20' 4"	18' 4"	12' 5"	11' 6"	10' 4"	18' 0"	16' 8"	14' 8"e
	43	18' 4"	16' 11"	15' 2"	26' 3"	24' 4"	21' 10"	16' 5"	15' 2"	13' 8"	23' 7"	21' 10"	19' 8"	13' 4"	12' 4"	11' 1"	19' 3"	17' 11"	15' 11"

"e" Web stiffeners required at supports.

>10,33'

VOK

CEILING SPAN TABLE NOTES

1. Values are for single spans.
2. Allowable ceiling span calculations based on 33ksi yield strength steel.
3. For fully-braced ceilings, use mid-span braced values.
4. End bearing length = 1" minimum.

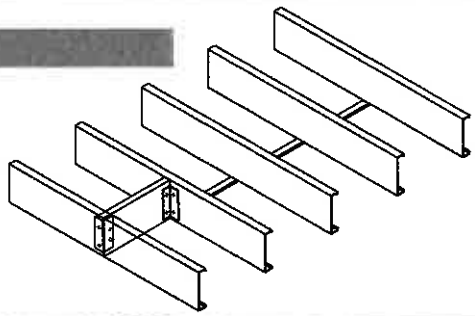

ALLOWABLE CEILING SPANS - DEFLECTION LIMIT L/360

Section	Thickness (mils)	4 psf						6 psf						13 psf					
		Lateral Support of Compression Flange						Lateral Support of Compression Flange						Lateral Support of Compression Flange					
		Unsupported			Midspan			Unsupported			Midspan			Unsupported			Midspan		
		Joist Spacing (in) o.c.			Joist Spacing (in) o.c.			Joist Spacing (in) o.c.			Joist Spacing (in) o.c.			Joist Spacing (in) o.c.			Joist Spacing (in) o.c.		
		12	16	24	12	16	24	12	16	24	12	16	24	12	16	24	12	16	24
162S125	18	7' 2"	6' 6"	5' 8"	7' 2"	6' 6"	5' 8"	6' 3"	5' 8"	4' 11"	6' 3"	5' 8"	4' 11"	4' 10"	4' 4"	3' 10"e	4' 10"	4' 4"	3' 10"e
	27	8' 5"	7' 7"	6' 8"	8' 5"	7' 7"	6' 8"	7' 4"	6' 8"	5' 10"	7' 4"	6' 8"	5' 10"	5' 8"	5' 2"	4' 6"	5' 8"	5' 2"	4' 6"
	30	8' 8"	7' 10"	6' 10"	8' 8"	7' 10"	6' 10"	7' 7"	6' 10"	6' 0"	7' 7"	6' 10"	6' 0"	5' 10"	5' 3"	4' 7"	5' 10"	5' 3"	4' 7"
	33	8' 11"	8' 1"	7' 1"	8' 11"	8' 1"	7' 1"	7' 10"	7' 1"	6' 2"	7' 10"	7' 1"	6' 2"	6' 0"	5' 6"	4' 9"	6' 0"	5' 6"	4' 9"
162S137	27	8' 10"	8' 0"	7' 0"	[illegible]	[illegible]	7' 0"	7' 8"	7' 0"	6' 1"	7' 8"	7' 0"	6' 1"	5' 11"	5' 5"	4' 8"	5' 11"	5' 5"	4' 8"
	33	9' 4"	8' 6"	7' 5"	9' 4"	8' 6"	7' 5"	8' 2"	7' 5"	6' 6"	8' 2"	7' 5"	6' 6"	6' 4"	5' 9"	5' 0"	6' 4"	5' 9"	5' 0"
250S125	18	8' 4"	7' 8"	6' 9"	9' 10"	9' 0"	7' 10"	7' 4"	6' 9"	6' 1"	8' 7"	7' 10"	6' 10"e	5' 11"e	5' 6"e	4' 9"e	6' 8"e	6' 0"e	5' 3"e
	27	9' 8"	8' 11"	7' 11"	11' 7"	10' 6"	9' 2"	8' 7"	7' 11"	7' 1"	10' 1"	9' 2"	8' 0"	6' 11"	6' 5"	5' 8"	7' 10"	7' 1"	6' 2"
	30	10' 0"	9' 3"	8' 3"	12' 0"	10' 11"	9' 6"	8' 11"	8' 3"	7' 4"	10' 5"	9' 6"	8' 3"	7' 2"	6' 8"	5' 11"	8' 1"	7' 4"	6' 5"
	33	10' 5"	9' 7"	8' 7"	12' 5"	11' 3"	9' 10"	9' 3"	8' 7"	7' 7"	10' 10"	9' 10"	8' 7"	7' 5"	6' 10"	6' 2"	8' 4"	7' 7"	6' 7"
	43	11' 9"	10' 9"	9' 6"	13' 6"	12' 3"	10' 8"	10' 5"	9' 6"	8' 5"	11' 9"	10' 8"	9' 4"	8' 3"	7' 7"	6' 9"	9' 1"	8' 3"	7' 2"
250S137	27	10' 1"	10' 1"	9' 1"	12' 2"	11' 1"	9' 8"	9' 10"	9' 1"	8' 2"	10' 8"	9' 8"	8' 5"	8' 0"	7' 5"	6' 6"	8' 3"	7' 6"	6' 6"
	33	11' 9"	10' 10"	9' 8"	13' 0"	11' 10"	10' 4"	10' 6"	9' 8"	8' 8"	11' 4"	10' 4"	9' 0"	8' 6"	7' 10"	6' 11"	8' 9"	8' 0"	6' 11"
	43	13' 2"	12' 1"	10' 9"	14' 2"	12' 10"	11' 2"	11' 8"	10' 9"	9' 7"	12' 4"	11' 2"	9' 9"	9' 4"	8' 7"	7' 7"	9' 6"	8' 8"	7' 7"
250S162	33	13' 5"	12' 5"	10' 10"	13' 8"	12' 5"	10' 10"	11' 11"	10' 10"	9' 5"	11' 11"	10' 10"	9' 5"	9' 2"	8' 4"	7' 4"	9' 2"	8' 4"	7' 4"
	43	14' 10"	13' 6"	11' 9"	14' 10"	13' 6"	11' 9"	13' 0"	11' 9"	10' 3"	13' 0"	11' 9"	10' 3"	10' 0"	9' 1"	7' 11"	10' 0"	9' 1"	7' 11"
350S125	18	9' 4"	8' 8"	7' 8"	12' 11"	11' 8"	10' 3"e	8' 4"	7' 8"	6' 10"e	11' 3"e	10' 3"e	8' 11"e	8' 8"e	8' 2"e	5' 6"e	8' 8"e	7' 10"e	6' 6"e
	27	10' 7"	9' 9"	8' 9"	15' 0"	13' 8"	11' 11"	9' 6"	8' 9"	7' 10"	13' 1"	11' 11"	10' 5"	7' 8"	7' 1"	6' 5"	10' 1"	9' 2"	8' 0"
	30	10' 11"	10' 1"	9' 0"	15' 6"	14' 1"	12' 4"	9' 9"	9' 0"	8' 1"	13' 7"	12' 4"	10' 9"	7' 11"	7' 4"	6' 7"	10' 6"	9' 6"	8' 4"
	33	11' 4"	10' 6"	9' 4"	16' 1"	14' 7"	12' 9"	10' 1"	9' 4"	8' 5"	14' 0"	12' 9"	11' 1"	8' 2"	7' 7"	6' 9"	10' 10"	9' 10"	8' 7"
	43	12' 7"	11' 7"	10' 4"	17' 6"	15' 11"	13' 10"	11' 2"	10' 4"	9' 2"	15' 3"	13' 10"	12' 1"	9' 0"	8' 3"	7' 5"	11' 10"	10' 9"	9' 4"
350S137	27	11' 11"	11' 1"	9' 11"	15' 10"	14' 4"	12' 6"	10' 9"	9' 11"	8' 11"	13' 10"	12' 6"	10' 11"	8' 9"	8' 2"	7' 4"	10' 8"	9' 8"	8' 5"
	33	12' 9"	11' 10"	10' 7"	16' 10"	15' 4"	13' 4"	11' 5"	10' 7"	9' 6"	14' 9"	13' 4"	11' 8"	9' 4"	8' 7"	7' 9"	11' 4"	10' 4"	9' 0"
	43	14' 2"	13' 0"	11' 7"	18' 4"	16' 8"	14' 6"	12' 7"	11' 7"	10' 4"	16' 0"	14' 6"	12' 8"	10' 2"	9' 4"	8' 5"	12' 4"	11' 3"	9' 10"
350S162	33	14' 7"	13' 6"	12' 1"	17' 8"	16' 1"	14' 0"	13' 6"	12' 1"	10' 10"	15' 5"	14' 0"	12' 3"	10' 7"	9' 10"	8' 10"	11' 11"	10' 10"	9' 5"
	43	16' 0"	14' 9"	13' 2"	19' 3"	17' 6"	15' 3"	14' 4"	13' 2"	11' 10"	16' 9"	15' 3"	13' 4"	11' 7"	10' 8"	9' 7"	13' 0"	11' 9"	10' 3"
362S125	18	9' 5"	8' 9"	7' 9"	13' 3"	12' 0"	10' 6"e	8' 6"	7' 9"	6' 11"e	11' 7"e	10' 6"e	9' 2"e	6' 9"e	6' 2"e	5' 7"e	8' 11"e	7' 11"e	6' 7"e
	27	10' 8"	9' 11"	8' 10"	15' 3"	14' 0"	12' 3"	9' 7"	8' 10"	7' 11"	13' 6"	12' 3"	10' 8"	7' 9"	7' 2"	6' 6"	10' 5"	9' 5"	8' 3"
	30	11' 0"	10' 2"	9' 2"	15' 8"	14' 6"	12' 8"	9' 10"	9' 2"	8' 2"	13' 11"	12' 8"	11'1"	8' 0"	7' 5"	6' 8"	10' 9"	9' 9"	8' 6"
	33	11' 5"	10' 7"	9' 5"	16' 3"	15' 0"	13' 1"	10' 3"	9' 5"	8' 6"	14' 5"	13' 1"	11' 5"	8' 3"	7' 8"	6' 10"	11' 2"	10' 1"	8' 10"
	43	12' 9"	11' 8"	10' 5"	17' 9"	16' 4"	14' 3"	11' 4"	10' 5"	9' 3"	15' 8"	14' 3"	12' 5"	9' 1"	8' 4"	7' 6"	12' 1"	11' 0"	9' 7"
362S137	27	12' 1"	11' 2"	10' 1"	16' 3"	14' 9"	12' 11"	10' 10"	10' 1"	9' 1"	14' 2"	12' 11"	11' 3"	8' 10"	8' 3"	7' 5"	10' 11"	9' 11"	8' 8"e
	33	12' 11"	11' 11"	10' 8"	17' 4"	15' 9"	13' 9"	11' 7"	10' 8"	9' 7"	15' 2"	13' 9"	12' 0"	9' 5"	8' 8"	7' 10"	11' 8"	10' 7"	9' 3"
	43	14' 3"	13' 2"	11' 9"	18' 10"	17' 1"	14' 11"	12' 8"	11' 9"	10' 6"	16' 5"	14' 11"	13' 1"	10' 3"	9' 5"	8' 5"	12' 8"	11' 6"	10' 1"
362S162	33	14' 8"	13' 7"	12' 2"	18' 2"	16' 6"	14' 5"	13' 2"	12' 2"	10' 11"	15' 10"	14' 5"	12' 7"	10' 9"	9' 11"	8' 11"	12' 3"	11' 1"	9' 8"
	43	16' 2"	14' 11"	13' 4"	19' 9"	17' 11"	15' 8"	14' 5"	13' 4"	11' 11"	17' 3"	15' 8"	13' 8"	11' 8"	10' 9"	9' 8"	13' 4"	12' 1"	10' 7"
400S125	27	11' 0"	10' 2"	9' 1"	16' 9"	14' 7"	13' 1"	9' 10"	9' 1"	8' 2"	14' 2"	13' 1"	11' 8"	8' 0"	7' 5"	6' 8"	11' 3"	10' 2"	8' 9"e
	30	11' 4"	10' 6"	9' 5"	16' 2"	15' 0"	13' 5"	10' 2"	9' 5"	8' 5"	14' 6"	13' 5"	11' 11"	8' 3"	7' 8"	6' 10"	11' 6"	10' 7"	9' 2"
	33	11' 9"	10' 10"	9' 8"	16' 9"	15' 6"	13' 10"	10' 6"	9' 9"	8' 8"	15' 0"	13' 10"	12' 4"	8' 6"	7' 11"	7' 1"	12' 0"	10' 11"	9' 6"
	43	13' 0"	12' 0"	10' 8"	18' 2"	16' 10"	16' 1"	11' 7"	10' 8"	9' 6"	16' 4"	15' 1"	13' 6"	9' 4"	8' 7"	7' 8"	13' 1"	11' 11"	10' 5"
400S137	27	12' 5"	11' 6"	10' 4"	17' 6"	15' 11"	13' 11"	11' 2"	10' 4"	9' 4"	15' 4"	13' 11"	12' 2"	9' 1"	8' 5"	7' 7"	11' 10"	10' 9"	9' 5"e
	33	13' 3"	12' 3"	11' 0"	18' 8"	17' 0"	14' 10"	11' 10"	11' 0"	9' 10"	16' 4"	14' 10"	12' 11"	9' 8"	8' 11"	8' 1"	12' 7"	11' 5"	10' 0"
	43	14' 7"	13' 6"	12' 0"	20' 4"	18' 6"	16' 2"	13' 0"	12' 0"	10' 9"	17' 9"	16' 2"	14' 1"	10' 6"	9' 8"	8' 8"	13' 9"	12' 6"	10' 11"
400S162	33	15' 1"	13' 11"	12' 6"	19' 7"	17' 10"	15' 6"	13' 6"	12' 6"	11' 3"	17' 1"	15' 6"	13' 7"	11' 0"	10' 3"	9' 2"	13' 3"	12' 0"	10' 8"
	43	16' 7"	15' 3"	13' 8"	21' 4"	19' 4"	16' 11"	14' 9"	13' 8"	12' 2"	18' 7"	16' 11"	14' 9"	11' 11"	11' 1"	9' 11"	14' 5"	13' 1"	11' 5"
600S125	27	12' 4"e	11' 5"e	10' 4"e	17' 10"e	16' 7"e	14' 11"e	11' 1"e	10' 4"e	9' 3"e	16' 1"e	14' 11"e	13' 5"e	9' 1"e	8' 5"e	7' 7"e	13' 2"e	12' 2"e	10' 9"e
	30	12' 9"	11' 9"	10' 7"	18' 4"	17' 0"	15' 4"	11' 5"	10' 7"	9' 6"	16' 6"	15' 4"	13' 9"	9' 4"	8' 8"	7' 10"	13' 6"	12' 6"	11' 2"e
	33	13' 2"	12' 2"	10' 11"	18' 10"	17' 6"	15' 9"	11' 9"	10' 11"	9' 10"	17' 0"	15' 9"	14' 2"	9' 7"	8' 11"	8' 0"	13' 10"	12' 10"	11' 7"
	43	14' 5"	13' 3"	11' 10"	20' 5"	18' 11"	16' 11"	12' 10"	11' 10"	10' 7"	18' 4"	16' 11"	15' 3"	10' 5"	9' 7"	8' 7"	14' 11"	13' 10"	12' 5"
600S137	27	[illegible]	[illegible]	[illegible]	[illegible]	[illegible]	[illegible]	13' 4"	12' 4"	11' 1"	18' 2"	17' 10"	16' 1"	10' 10"	10' 1"	9' 1"	15' 9"	14' 7"	13' 1"e
	43	[illegible]	[illegible]	[illegible]	[illegible]	[illegible]	[illegible]	[illegible]	[illegible]	[illegible]	[illegible]	[illegible]	17' 3"	11' 9"	10' 10"	9' 9"	16' 10"	15' 8"	[illegible]
600S162	33	16' 10"	15' 7"	14' 0"	24' 4"	22' 7"	20' 4"	15' 2"	14' 0"	12' 8"	21' 11"	20' 4"	18' 4"	12' 5"	11' 6"	10' 4"	18' 0"	16' 6"	14' 5"e
	43	18' 4"	16' 11"	15' 2"	26' 3"	24' 4"	21' 10"	16' 5"	15' 2"	13' 8"	23' 7"	21' 10"	19' 8"	13' 4"	12' 4"	11' 1"	19' 3"	17' 11"	15' 8"

"e" Web stiffeners required at supports.

INTERIOR ROOM WALLS

- MINIMUM ASCE7-10 WIND LOADS = 16psf ULTIMATE (1.0W) – CONSERVATIVE TO ASSUME FOR INTERIOR BLDG WALLS ← USE
- TSN METAL STUD MANUAL (SHT I-36) IS BASED ON IBC 2003 & ASCE 7-02 ~ $D + 0.75L + 0.75W_{MWRFS}$ (STRENGTH)
  $0.7W_{C\&C}$ (DEFLECTION) ← $0.75 \times 10psf_{MIN} = 7.5psf$
  UNFACTORED LOADS
- TO BE CONSERVATIVE, WE WILL USE ULTIMATE (FACTORED) ASCE7-10 MINIMUM WIND LOAD IN THESE EQUATIONS.

  ASCE 7-10 $D + 0.75L + (0.75 \times 0.6)W$ ← $(0.75 \times 0.6 \times 16psf) = 7.2psf$
  $0.6D + 0.6W$ ← LOAD COMBINATIONS COMPARE TO ASCE7-02

  16psf ULTIMATE MIN ≈ 15psf TABLE STUDS

  → $0.75 \times 15psf = 11.25psf > 7.5psf$ (METAL STUD DESIGN – ASCE 7-02)
  $> 7.2psf$ (" " " – ASCE 7-10)
- TOTAL DEAD LOAD $= 1.0DL = [(10psf_{CEILING} \times 1.33^{ft}c/c) + 1.8\#/ft] \times \frac{10.75ft\%}{2}$
  $= 81.8\#/ft + [(8psf_{WALL\ DL} \times 10^{ft}_{TALL} \times 1.33^{ft}c/c) + (1.5\#/ft_{STUD\ DL} \times 10ft)]$
  $= 203.4\# \downarrow$
- TOTAL LIVE LOAD $= 50psf \times 1.33^{ft}c/c \times \frac{10.75ft\%}{2} = 358.2\# \downarrow$
  → TOTAL LOAD = 1.0D + 1.0L = 0.563K
- REF SHT I-38 COMBINED AXIAL & LATERAL LOAD DESIGN EXAMPLE FOR THIS PROJECTS WALL SPECIFIC CALCS
  ~ USE 362S162-43 (33KSI) WALL STUDS

I-38

COMBINED AXIAL AND LATERAL LOAD TABLE NOTES

- Allowable loads are based on specified weak axis and torsional bracing at 48" o.c. maximum for axial load calculation and continuous support of each flange for flexural calculation.
- Sections are punched with a standard punchout 1.5" wide, located on the centerline of the web 24" o.c.
- Allowable loads are based on a punched section for axial load calculation, and an unpunched section for flexural calculation as per *ICC-ES AC46-Appendix B.*
- Weak axis and torsional bracing should have sufficient stiffness and strength to resist axial load.
- Lateral load is multiplied by 0.75 for strength determination and by 0.70 for deflection determination. Axial load is not multiplied by any factor (Load factor = 1.0)
- Strength increase due to cold forming is incorporated in calculating allowable loads as per *AISI Specification Sec. A7.2.*
- Check lateral end reactions for web crippling if applicable.
- Loads in tables are in kips/stud.

TABLE BACKGROUND AND EXAMPLE

1. Basis for Tables:

The combined axial and lateral load tables in this catalog cover the following basic load combinations for the Allowable Stress Design (ASD) Method (IBC2003 and ASCE 7-02):

- D + L (Strength determination)
- D + 0.75L + 0.75W_{MWFRS}* (Strength determination)
- 0.70$W_{C\&C}$** (Deflection determination)

* MWFRS: Main Wind Force Resisting System
** C&C: Component and Cladding

2. Design Example:

Given:

Service (Un-factored) Loads:

Axial Dead Load	= ~~1.6 kips~~ 0.204K
Axial Live Load	= ~~3.2 kips~~ 0.359K
Wind Pressure (MWFRS)	= ~~30~~ psf 15 psf
Wind Pressure (C&C)	= ~~40~~ psf 15 psf
Wall Width	= ~~6.0"~~ 4"
Stud Height	= ~~12.0 ft.~~ 10 ft
Stud Spacing	= 16" o.c. ✓
Specified Deflection Limit	= L/600 ✓

Bridging (Lateral Bracing) at maximum vertical spacing of 48" o.c. ✓

Calculations:

a) Use the D + L load combination to get the first estimate of the stud.

Combination total axial load = ~~1.6 + 3.2~~
= ~~4.8 kips~~ 0.563K

From the "No Lateral Load" table with a ~~12.0'~~ 10' wall height, choose ~~600~~362S162-~~54~~ 43 (~~50~~33ksi) with an axial resistance of ~~5.62~~ 2.64K kips > ~~4.8~~ 0.563K kips OK ✓

b) Check the D + 0.75L + 0.75W_{MWFRS} load combination for strength.

Combination total axial load = ~~1.6 + 0.75(3.2)~~
= ~~4.0 kips~~ 15 0.473K ✓

Go to the "Lateral Load = ~~30~~ psf" table with a ~~12.0'~~ 10' wall height and 16" stud spacing. The axial resistance for ~~600~~362S162-~~54~~ 43 (~~50~~33ksi) is ~~2.44~~ 1.73K kips > ~~2.0~~ 0.473K kips OK ✓

c) Check the 0.70$W_{C\&C}$ load combination for deflection. The specified limit is L/600.

Go to the "Lateral Load = ~~40~~ 15 psf" table with a ~~12.0'~~ 10' wall height and 16" stud spacing. The deflection parameter for ~~600~~362S162-~~54~~ 43 (~~50~~33ksi) is ~~X~~ Nothing, which means that deflection ~~exceeds~~ is less than L/720 < L/600 OK ✓

Conclusion:

Use ~~600~~362S162-54 (50ksi) (with design thickness = 0.0566" and Fy = 50 ksi) spaced at 16" o.c. with 2 lines of bridging arranged so that the maximum spacing does not exceed 48" (4 ft.). ✓

3. Extra Design Considerations:

a) Check lateral end reaction of the stud for web crippling using the Web Crippling Load Tables included in this catalog.

b) If the specified axial dead load acting on the stud is significantly larger than the specified axial live load, the following extra basic load combination needs to be checked as well:

- D + $W_{C\&C}$ (Strength determination)

There are no special tables for this load combination. However, you can still use the same tables by scaling up the $W_{C\&C}$ wind pressure value (use the table that corresponds to the scaled-up wind pressure) and then compare the table's axial resistance to the specified dead load.

Supplemental Pre-Final (90%) Design Submittal
PG&E Topock Compressor Station
Needles, California

Park Moabi Construction Headquarters
Lighting Calculations

02/02/2015

Prepared for:

Pacific Gas and Electric Company

Reviewed by:

Dave Oberle, P.E.
Principal Electrical Engineer
ARCADIS U.S., Inc.

Prepared by:

John Sidoti, P.E.
Senior Electrical Engineer
ARCADIS U.S., Inc

Project No. RC0007753.0019
Client PGE Topock CHQ
Engineer: John Sidoti

Date 2-Feb-15
reflectance: 50% ceiling, 30% wall

Lighting Calculations																	
Room Data					Desired	Calc.	Lamp Data			Light Luminaire Data					Calc. #	Actual #	Actual
No.	Name	Length	Width	Mtg. Ht.	fc	RCR	Lumens	BF	LLD	Type	CU	# Lamps	LDD	S/MH	Fixtures	Luminaire	fc
	CHQ																
	Workshop	50	38.7	18	20	4.1	4400	1	0.9	B	0.51	2	0.9	1.25	10.65	16	30.06
	Sample Prep/Admin	29.25	10	10	20	6.7	2900	0.93	0.9	A2	0.25	2	0.9	1.25	5.36	5	18.67
	Water Lab	10	10	10	20	10.0	2900	0.93	0.9	A3	0.18	3	0.9	1.25	1.70	2	23.59
	Soil Lab	10	10	10	20	10.0	2800	0.93	0.9	A3	0.18	3	0.9	1.25	1.76	2	22.78
	Mech Room	7	4	10	20	19.6	2800	0.93	0.9	A2	0.15	2	0.9	1.25	0.88	1	22.60
	Restroom	8	7	10	20	13.4	2800	0.93	0.9	A2	0.15	2	0.9	1.25	1.77	1	11.30
	Clean Room	10	10	10	20	10.0	2800	0.93	0.9	A2	0.18	2	0.9	1.25	2.63	2	15.19
	Storage	40	10	10	10	6.3	2800	0.93	0.9	A2	0.28	2	0.9	1.25	3.39	4	11.81

Supplemental Pre-Final (90%) Design Submittal for the Final Groundwater Remedy

Bat Cave Wash Crossing Calculations

PG&E Topock Compressor Station

Needles, California

February 2, 2015

Prepared for:

Pacific Gas and Electric Company

Reviewed by:

Jeff Griest, P.E.

Design Manager

CH2M HILL

Prepared by:

Michael Schwab, E.I.

Project Engineer

CH2M HILL

CH2MHILL®

TABLE OF CONTENTS

APPENDIX A: HYDROLOGIC ANALYSIS

A-1 HEC-1 FLOWRATES SUMMARY

A-2 TIME OF CONCENTRATION CALCULATIONS

A-3 HEC-1 MODELS

A-3.1 25-YEAR, 24-HOUR HEC-1 MODEL SDN3

APPENDIX B: HYDRAULIC ANALYSIS

B-1 EXISTING CONDITION HEC-RAS CALCULATIONS

B-2 PROPOSED CONDITION HEC-RAS CALCULATIONS

B-3 RIPRAP SIZING CALCULATIONS

APPENDIX C: RCB STRUCTURAL CALCULATIONS

Appendix A –
Hydrologic Analysis

A-1 –
HEC-1 Flowrates Summary

TOPOCK
BAT CAVE WASH CULVERT CROSSING
HEC-1 FLOW SUMMARY TABLE
25-YEAR, 24-HOUR STORM

SUBBASIN/COMB. PT.	AREA	CURVE NUMBER	FLOW
	mi^2		cfs
OFF1	0.53	85.20	357
OFF2	0.72	85.20	597
OFF3	0.43	85.20	352
OFF4	0.80	85.20	709
CP1	2.49	-	1479
OFF5	0.79	85.20	447
OFF6	0.82	85.20	513
CP2	4.10	-	2347
OFF7	0.28	85.20	250
CP3	4.37	-	2307

TOPOCK
BAT CAVE WASH CULVERT CROSSING
HEC-1 FLOW SUMMARY TABLE
25-YEAR, 24-HOUR STORM

SUBBASIN/COMB. PT.	AREA mi^2	CURVE NUMBER	FLOW cfs
OFF1	0.53	85.20	357
OFF2	0.72	85.20	497
OFF3	0.43	85.20	352
OFF4	0.80	85.20	709
CP1	2.49	-	1479
OFF5	0.79	85.20	447
OFF6	0.82	85.20	513
CP2	4.10	-	2347
OFF7	0.28	85.20	250
CP3	4.37	-	2307

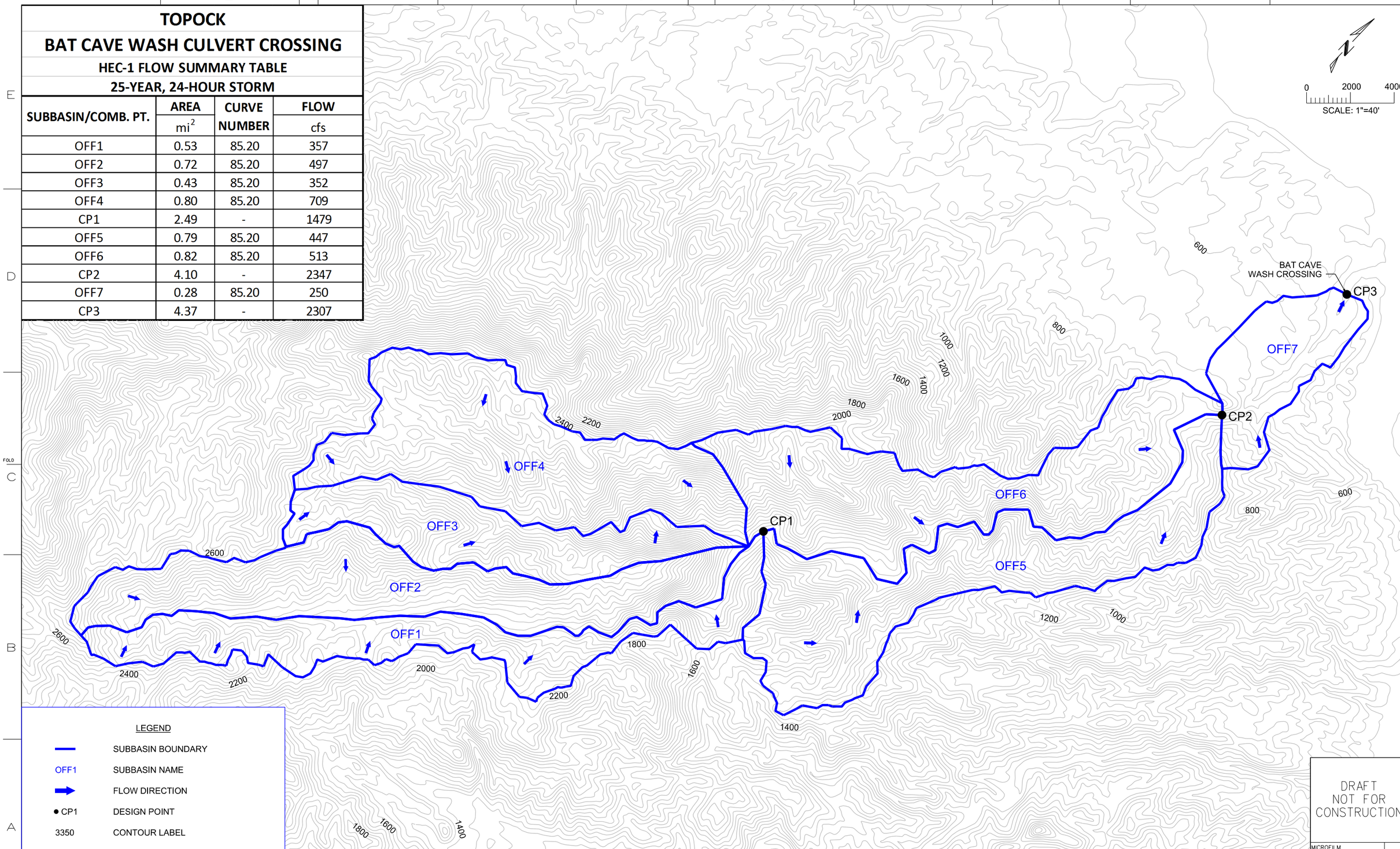

DRAFT NOT FOR CONSTRUCTION

CH2MHILL®

NO.	DATE	DESCRIPTION	GM/SPEC	DWN	CHKD	SUPV	APVD BY
1	12/05/14	SUPPLEMENTAL PRE-FINAL DESIGN (90%)		SB	MS	CH	NB

REVISIONS

APPROVED BY: SO; SUPV NB; DSGN SB; DWN SB; CHKD MS; OK; DATE; SCALES

TOPOCK GROUNDWATER REMEDIATION PROJECT
BAT CAVE WASH SUBBASIN MAP
GAS TRANSMISSION & DISTRIBUTION
PACIFIC GAS AND ELECTRIC COMPANY
SAN FRANCISCO, CALIFORNIA

MICROFILM; BILL OF MATL; DWG LIST; SUPSDS; SUPSD BY; SHEET NO. 1 OF 1 SHEETS; FIGURE 1; REV

FILENAME: PG&E_Border.dgn
PLOT DATE: 2014\11\24 PLOT TIME: 9:53:17 AM
FILENAME: _____DGN __-__-04 ____
N1808

A-2 –
Time of Concentration Calculations

TIME OF CONCENTRATION / LAG TIME DETERMINATION - less than 1 mi^2

CH2MHILL

TOPOCK - BAT CAVE WASH CROSSING
OFFSITE BASINS

Project No:
Date: 6/10/14
Calculated by: MS

SUB-BASIN DATA						INITIAL / OVERLAND TIME (Ti)			TRAVEL TIME (Tt)							T_{lag}	REMARKS
Basin ID	DEV./EX. (D or E)	CN	K	AREA Ac	AREA Mi^2	INITIAL LENGTH Feet	SLOPE %	Ti Min	TRAVEL LENGTH Feet	SLOPE %	V_1 VELOCITY FPS	V_2 VELOCITY FPS	Tt Min	Tc Min	Tc Check Min	T_{lag} 0.6Tc/60 Hours	RAINFALL INCHES
(1)	(2)	(3)	(4)	(5a)	(5b)	(6)	(7)	(8)	(9)	(10)	(10a)	(10b)	(11)	(12)	(13)	(14)	(15)
OFF1	E	85.2	0.7346		0.5308	500	38.00	4.4	16870	7.11	3.9	7.8	36.9	41.3	N/A	**0.413**	
OFF2	E	85.2	0.7346		0.7236	500	40.00	4.3	16973	7.42	4.0	8.0	36.3	40.6	N/A	**0.406**	
OFF3	E	85.2	0.7346		0.4286	500	12.00	6.4	12113	10.81	4.9	9.7	21.7	28.2	N/A	**0.282**	
OFF4	E	85.2	0.7346		0.8042	500	28.00	4.8	11092	10.82	4.9	9.7	20.0	24.8	N/A	**0.248**	
OFF5	E	85.2	0.7346		0.7886	500	10.00	6.8	15492	5.16	3.4	6.7	39.9	46.7	N/A	**0.467**	
OFF6	E	85.2	0.7346		0.8217	500	21.00	5.3	17894	9.05	4.5	8.8	34.6	40.0	N/A	**0.400**	
OFF7	E	85.2	0.7346		0.2759	500	24.00	5.1	4647	8.61	4.3	8.6	9.9	15.0	N/A	**0.150**	

NOTE:

(1) Subbasin Name
(2) Developed or Undeveloped Subbasin
(3) Curve Number (AMC Condition I; Soil Group D)
(4) K = 0.0132 (CN) - 0.39
(5a) & (5b) Area
(6) Initial Length
(7) Initial Slope
(8) Ti = 1.8 (1.1 - K) L^1/2 / S^1/3
(9) Travel Length
(10) Slope
(10a) Slope V_1 applies to the first 500 feet of travel distance;
Developed V_1 = 20.2*(S/100)^1/2
(10b) V_2 applies to the remaining travel distance;
Developed V_2 = 30.6*(S/100)^1/2
(11) Tt = 500/(V1*60)+(Travel Length-500)/(V2*60)
(12) Tc = Ti + Tt
(13) Tc Check = L/180+10 (select smaller Tc)
(14) Tlag = 0.6 Tc/60
(15) Rainfall in inches

REFERENCE: Caltrans Highway Design Manual

A-3 –
HEC-1 Model

A-3.1 –
25-Year, 24-Hour HEC-1 Model SDN3 (*Existing*)

```
1****************************************                                                    ****************************************
 *                                      *                                                    *                                      *
 *   FLOOD HYDROGRAPH PACKAGE  (HEC-1)  *                                                    *    U.S. ARMY CORPS OF ENGINEERS      *
 *              JUN   1998              *                                                    *    HYDROLOGIC ENGINEERING CENTER     *
 *           VERSION 4.1                *                                                    *          609 SECOND STREET           *
 *                                      *                                                    *       DAVIS, CALIFORNIA 95616        *
 *  RUN DATE   12JUN14  TIME  09:00:55  *                                                    *           (916) 756-1104             *
 *                                      *                                                    *                                      *
 ****************************************                                                    ****************************************


                                                X     X  XXXXXXX   XXXXX           X
                                                X     X  X        X     X         XX
                                                X     X  X        X                X
                                                XXXXXXX  XXXX     X        XXXXX   X
                                                X     X  X        X                X
                                                X     X  X        X     X          X
                                                X     X  XXXXXXX   XXXXX          XXX


          THIS PROGRAM REPLACES ALL PREVIOUS VERSIONS OF HEC-1 KNOWN AS HEC1 (JAN 73), HEC1GS, HEC1DB, AND HEC1KW.

          THE DEFINITIONS OF VARIABLES -RTIMP- AND -RTIOR- HAVE CHANGED FROM THOSE USED WITH THE 1973-STYLE INPUT STRUCTURE.
          THE DEFINITION OF -AMSKK- ON RM-CARD WAS CHANGED WITH REVISIONS DATED 28 SEP 81. THIS IS THE FORTRAN77 VERSION
          NEW OPTIONS: DAMBREAK OUTFLOW SUBMERGENCE , SINGLE EVENT DAMAGE CALCULATION, DSS:WRITE STAGE FREQUENCY,
          DSS:READ TIME SERIES AT DESIRED CALCULATION INTERVAL   LOSS RATE:GREEN AND AMPT INFILTRATION
          KINEMATIC WAVE: NEW FINITE DIFFERENCE ALGORITHM


1                                                   HEC-1 INPUT                                                   PAGE  1

          LINE           ID.......1.......2.......3.......4.......5.......6.......7.......8.......9......10

                         *DIAGRAM
 *** FREE ***
             1           ID    TOPOCK - BAT CAVE WASH PIPE CROSSING
             2           ID    FLOW TO PIPE CROSSING
             3           ID    INPUT FILE = TOPOCK25.DAT
             4           ID    INPUT FILE DATE = JUNE 2014
             5           ID    DESIGN STORM = 25-YEAR 24-HR STORM
             6           ID    STORM DISTRIBUTION = SDN #3
             7           ID    MODELED BY CH2M HILL (MICHAEL SCHWAB, E.I.)
             8           ID    CHECKED BY CH2M HILL (JEFF GRIEST, P.E., CFM)
             9           ID    STORM CENTERING = FULL WATERSHED
            10           ID
            11           ID    JR CARDS CONTAIN DARFS BASED ON THE FOLLOWING VALUES:
            12           ID
            13           ID                        AREA    DARF
            14           ID                        SQ. MI.
            15           ID                        0       1.00
            16           ID                        4.37    0.980
            17           ID                        5.00    0.970
            18           ID
            19           ID
            20           ID
            21           ID
            22           ID
            23           ID
            24           ID
            25           ID  JR CARD RATIOS REPRESENT DEPTH-AREA REDUCTION FACTORS (DARF'S)
            26           ID
            27           ID  25-YEAR, 24-HOUR STORM,  SDN3
            28           ID
            29           IT       6       0       0     300
            30           IO       6       0       0
            31           IN       6       0       0
            32           JR    PREC    1.00   0.980   0.970
                         *

            33           KK    OFF1
            34           BA  0.5308
            35           PB    2.96
            36           PC   0.000   0.001   0.002   0.003   0.004   0.005   0.006   0.007   0.008   0.009
            37           PC   0.011   0.012   0.013   0.014   0.015   0.016   0.017   0.018   0.020   0.021
            38           PC   0.022   0.023   0.024   0.026   0.027   0.028   0.029   0.031   0.032   0.033
            39           PC   0.035   0.036   0.037   0.038   0.040   0.041   0.042   0.044   0.045   0.047
            40           PC   0.048   0.049   0.051   0.052   0.054   0.055   0.057   0.058   0.060   0.061
            41           PC   0.063   0.065   0.066   0.068   0.070   0.071   0.073   0.075   0.076   0.078
            42           PC   0.080   0.082   0.084   0.085   0.087   0.089   0.091   0.093   0.095   0.097
            43           PC   0.099   0.101   0.103   0.105   0.107   0.109   0.111   0.113   0.116   0.118
            44           PC   0.120   0.122   0.125   0.127   0.130   0.132   0.135   0.138   0.141   0.144
            45           PC   0.147   0.150   0.153   0.157   0.160   0.163   0.166   0.170   0.173   0.177
            46           PC   0.181   0.185   0.189   0.194   0.199   0.204   0.209   0.215   0.221   0.228
            47           PC   0.235   0.243   0.251   0.261   0.271   0.283   0.307   0.354   0.431   0.568
            48           PC   0.663   0.682   0.699   0.713   0.725   0.735   0.743   0.751   0.759   0.766
            49           PC   0.772   0.778   0.784   0.789   0.794   0.799   0.804   0.808   0.812   0.816
            50           PC   0.820   0.824   0.827   0.831   0.834   0.838   0.841   0.844   0.847   0.850
            51           PC   0.854   0.856   0.859   0.862   0.865   0.868   0.870   0.873   0.875   0.878
1                                                   HEC-1 INPUT                                                   PAGE  2

          LINE           ID.......1.......2.......3.......4.......5.......6.......7.......8.......9......10
```

```
  52          PC   0.880   0.882   0.885   0.887   0.889   0.891   0.893   0.895   0.898   0.900
  53          PC   0.902   0.904   0.906   0.908   0.910   0.912   0.914   0.915   0.917   0.919
  54          PC   0.921   0.923   0.925   0.926   0.928   0.930   0.931   0.933   0.935   0.936
  55          PC   0.938   0.939   0.941   0.942   0.944   0.945   0.947   0.948   0.949   0.951
  56          PC   0.952   0.953   0.955   0.956   0.957   0.958   0.960   0.961   0.962   0.964
  57          PC   0.965   0.966   0.967   0.968   0.970   0.971   0.972   0.973   0.975   0.976
  58          PC   0.977   0.978   0.979   0.981   0.982   0.983   0.984   0.985   0.986   0.988
  59          PC   0.989   0.990   0.991   0.992   0.993   0.994   0.996   0.997   0.998   0.999
  60          PC   1.000
  61          LS       0    85.2
  62          UD   0.413
              *

  63          KK   ROFF1
  64          KM  ROUTE OFF1 TO CP1
  65          KM  BAT CAVE WASH
  66          KM  LINING = NATURAL WASH
  67          RD   17370   0.071   0.025       0    TRAP      96       6
              *

  68          KK    OFF2
  69          BA  0.7236
  70          PB    2.98
  71          LS       0    85.2
  72          UD   0.406
              *

  73          KK   ROFF2
  74          KM  ROUTE OFF2 TO CP1
  75          KM  BAT CAVE WASH
  76          KM  LINING = NATURAL WASH
  77          RD   17473   0.074   0.025       0    TRAP      96       6
              *

  78          KK    OFF3
  79          BA  0.4286
  80          PB    2.95
  81          LS       0    85.2
  82          UD   0.282
              *

  83          KK   ROFF3
  84          KM  ROUTE OFF3 TO CP1
  85          KM  TRIBUTARY TO BAT CAVE WASH
  86          KM  LINING = NATURAL WASH
  87          RD   12613   0.108   0.025       0    TRAP      40       4
              *

  88          KK    OFF4
  89          BA  0.8042
  90          PB    2.95
  91          LS       0    85.2
  92          UD   0.248
              *
1                                          HEC-1 INPUT                                          PAGE  3

 LINE         ID.......1.......2.......3.......4.......5.......6.......7.......8.......9......10


  93          KK   ROFF4
  94          KM  ROUTE OFF4 TO CP1
  95          KM  TRIBUTARY TO BAT CAVE WASH
  96          KM  LINING = NATURAL WASH
  97          RD   11592   0.108   0.025       0    TRAP      40       4
              *

  98          KK     CP1
  99          KM  COMBINE OFF1, OFF2, OFF3, AND OFF4
 100          KM  BAT CAVE WASH
 101          HC       4
              *

 102          KK    RCP1
 103          KM  ROUTE CP1 TO CP2
 104          KM  BAT CAVE WASH
 105          KM  LINING = NATURAL WASH
 106          RD   15213   0.042   0.025       0    TRAP      96       6
              *

 107          KK    OFF5
 108          BA  0.7886
 109          PB    2.82
 110          LS       0    85.2
 111          UD   0.467
              *

 112          KK   ROFF5
 113          KM  ROUTE OFF5 TO CP2
 114          KM  TRIBUTARY TO BAT CAVE WASH
 115          KM  LINING = NATURAL WASH
 116          RD   15992   0.052   0.025       0    TRAP      96       6
              *

 117          KK    OFF6
 118          BA  0.8217
```

```
 119          PB    2.80
 120          LS       0    85.2
 121          UD   0.400
              *

 122          KK   ROFF6
 123          KM  ROUTE OFF6 TO CP2
 124          KM  TRIBUTARY TO BAT CAVE WASH
 125          KM  LINING = NATURAL WASH
 126          RD   18394   0.091   0.025       0    TRAP      96       6
              *

 127          KK     CP2
 128          KM  COMBINE CP1, OFF5, AND OFF6
 129          KM  BAT CAVE WASH
 130          HC       3
              *
1                                                HEC-1 INPUT                                                PAGE  4

         LINE          ID.......1.......2.......3.......4.......5.......6.......7.......8.......9......10


 131          KK    RCP2
 132          KM  ROUTE CP2 TO CP3
 133          KM  BAT CAVE WASH
 134          KM  LINING = NATURAL WASH
 135          RD    4067   0.039   0.025       0    TRAP      96       6
              *

 136          KK    OFF7
 137          BA  0.2759
 138          PB    2.68
 139          LS       0    85.2
 140          UD   0.150
              *

 141          KK   ROFF7
 142          KM  ROUTE OFF7 TO CP3
 143          KM  BAT CAVE WASH
 144          KM  LINING = NATURAL WASH
 145          RD    5147   0.086   0.025       0    TRAP      96       6
              *

 146          KK     CP3
 147          KM  COMBINE CP2 AND OFF7
 148          KM  BAT CAVE WASH PIPE CROSSING
 149          HC       2
 150          KO       1
              *
 151          ZZ
1
                 SCHEMATIC DIAGRAM OF STREAM NETWORK
 INPUT
  LINE      (V) ROUTING          (--->) DIVERSION OR PUMP FLOW

   NO.      (.) CONNECTOR        (<---) RETURN OF DIVERTED OR PUMPED FLOW

    33        OFF1
                 V
                 V
    63       ROFF1
                 .
                 .
    68           .        OFF2
                 .           V
                 .           V
    73           .       ROFF2
                 .           .
                 .           .
    78           .           .        OFF3
                 .           .           V
                 .           .           V
    83           .           .       ROFF3
                 .           .           .
                 .           .           .
    88           .           .           .        OFF4
                 .           .           .           V
                 .           .           .           V
    93           .           .           .       ROFF4
                 .           .           .           .
                 .           .           .           .
    98         CP1.................................
                 V
                 V
   102        RCP1
                 .
                 .
   107           .        OFF5
                 .           V
                 .           V
   112           .       ROFF5
                 .           .
                 .           .
   117           .           .        OFF6
                 .           .           V
                 .           .           V
```

```
  122          .           .       ROFF6
               .           .           .
               .           .           .
  127        CP2.......................
               V
               V
  131       RCP2
               .
               .
  136          .        OFF7
               .           V
               .           V
  141          .       ROFF7
               .           .
               .           .
  146        CP3............
```

(***) RUNOFF ALSO COMPUTED AT THIS LOCATION

```
1****************************************                                    ****************************************
 *                                      *                                    *                                      *
 *   FLOOD HYDROGRAPH PACKAGE  (HEC-1)  *                                    *    U.S. ARMY CORPS OF ENGINEERS      *
 *               JUN   1998             *                                    *    HYDROLOGIC ENGINEERING CENTER     *
 *            VERSION 4.1               *                                    *          609 SECOND STREET           *
 *                                      *                                    *       DAVIS, CALIFORNIA 95616        *
 *  RUN DATE   12JUN14  TIME  09:00:55  *                                    *           (916) 756-1104             *
 *                                      *                                    *                                      *
 ****************************************                                    ****************************************
```

```
TOPOCK - BAT CAVE WASH PIPE CROSSING
FLOW TO PIPE CROSSING
INPUT FILE = TOPOCK25.DAT
INPUT FILE DATE = JUNE 2014
DESIGN STORM = 25-YEAR 24-HR STORM
STORM DISTRIBUTION = SDN #3
MODELED BY CH2M HILL (MICHAEL SCHWAB, E.I.)
CHECKED BY CH2M HILL (JEFF GRIEST, P.E., CFM)
STORM CENTERING = FULL WATERSHED

JR CARDS CONTAIN DARFS BASED ON THE FOLLOWING VALUES:

                    AREA    DARF
                    SQ. MI.
                    0       1.00
                    4.37    0.980
                    5.00    0.970


JR CARD RATIOS REPRESENT DEPTH-AREA REDUCTION FACTORS (DARF'S)

25-YEAR, 24-HOUR STORM,  SDN3


  30 IO          OUTPUT CONTROL VARIABLES
                       IPRNT           6  PRINT CONTROL
                       IPLOT           0  PLOT CONTROL
                       QSCAL          0.  HYDROGRAPH PLOT SCALE

     IT          HYDROGRAPH TIME DATA
                        NMIN           6  MINUTES IN COMPUTATION INTERVAL
                       IDATE      1    0  STARTING DATE
                       ITIME        0000  STARTING TIME
                          NQ         300  NUMBER OF HYDROGRAPH ORDINATES
                      NDDATE      2    0  ENDING DATE
                      NDTIME        0554  ENDING TIME
                      ICENT           19  CENTURY MARK

                  COMPUTATION INTERVAL     .10 HOURS
                       TOTAL TIME BASE   29.90 HOURS

          ENGLISH UNITS
               DRAINAGE AREA         SQUARE MILES
               PRECIPITATION DEPTH   INCHES
               LENGTH, ELEVATION     FEET
               FLOW                  CUBIC FEET PER SECOND
               STORAGE VOLUME        ACRE-FEET
               SURFACE AREA          ACRES
               TEMPERATURE           DEGREES FAHRENHEIT

     JP          MULTI-PLAN OPTION
                       NPLAN           1  NUMBER OF PLANS

     JR          MULTI-RATIO OPTION
                     RATIOS OF PRECIPITATION
                   1.00       .98       .97

 150 KO          OUTPUT CONTROL VARIABLES
                       IPRNT           1  PRINT CONTROL
```

```
                    IPLOT          0  PLOT CONTROL
                    QSCAL         0.  HYDROGRAPH PLOT SCALE

 149 HC          HYDROGRAPH COMBINATION
                    ICOMP          2  NUMBER OF HYDROGRAPHS TO COMBINE

                                                        ***
```

HYDROGRAPH AT STATION CP3
SUM OF 2 HYDROGRAPHS
PLAN 1, RATIO = .98

DA	MON	HRMN	ORD	FLOW	DA	MON	HRMN	ORD	FLOW	DA	MON	HRMN	ORD	FLOW	DA	MON	HRMN	ORD	FLOW
1		0000	1	0.	1		0730	76	0.	1		1500	151	301.	1		2230	226	81.
1		0006	2	0.	1		0736	77	0.	1		1506	152	288.	1		2236	227	81.
1		0012	3	0.	1		0742	78	0.	1		1512	153	275.	1		2242	228	83.
1		0018	4	0.	1		0748	79	0.	1		1518	154	265.	1		2248	229	82.
1		0024	5	0.	1		0754	80	0.	1		1524	155	255.	1		2254	230	82.
1		0030	6	0.	1		0800	81	0.	1		1530	156	246.	1		2300	231	81.
1		0036	7	0.	1		0806	82	0.	1		1536	157	239.	1		2306	232	81.
1		0042	8	0.	1		0812	83	0.	1		1542	158	232.	1		2312	233	80.
1		0048	9	0.	1		0818	84	0.	1		1548	159	226.	1		2318	234	80.
1		0054	10	0.	1		0824	85	0.	1		1554	160	219.	1		2324	235	80.
1		0100	11	0.	1		0830	86	0.	1		1600	161	214.	1		2330	236	80.
1		0106	12	0.	1		0836	87	0.	1		1606	162	210.	1		2336	237	80.
1		0112	13	0.	1		0842	88	0.	1		1612	163	205.	1		2342	238	80.
1		0118	14	0.	1		0848	89	0.	1		1618	164	201.	1		2348	239	78.
1		0124	15	0.	1		0854	90	0.	1		1624	165	196.	1		2354	240	77.
1		0130	16	0.	1		0900	91	0.	1		1630	166	193.	2		0000	241	78.
1		0136	17	0.	1		0906	92	0.	1		1636	167	191.	2		0006	242	79.
1		0142	18	0.	1		0912	93	0.	1		1642	168	187.	2		0012	243	79.
1		0148	19	0.	1		0918	94	0.	1		1648	169	182.	2		0018	244	78.
1		0154	20	0.	1		0924	95	0.	1		1654	170	177.	2		0024	245	76.
1		0200	21	0.	1		0930	96	0.	1		1700	171	173.	2		0030	246	74.
1		0206	22	0.	1		0936	97	1.	1		1706	172	170.	2		0036	247	72.
1		0212	23	0.	1		0942	98	1.	1		1712	173	167.	2		0042	248	72.
1		0218	24	0.	1		0948	99	1.	1		1718	174	164.	2		0048	249	73.
1		0224	25	0.	1		0954	100	2.	1		1724	175	161.	2		0054	250	74.
1		0230	26	0.	1		1000	101	2.	1		1730	176	157.	2		0100	251	74.
1		0236	27	0.	1		1006	102	3.	1		1736	177	152.	2		0106	252	71.
1		0242	28	0.	1		1012	103	5.	1		1742	178	148.	2		0112	253	67.
1		0248	29	0.	1		1018	104	6.	1		1748	179	146.	2		0118	254	62.
1		0254	30	0.	1		1024	105	8.	1		1754	180	145.	2		0124	255	56.
1		0300	31	0.	1		1030	106	10.	1		1800	181	145.	2		0130	256	50.
1		0306	32	0.	1		1036	107	13.	1		1806	182	143.	2		0136	257	44.
1		0312	33	0.	1		1042	108	15.	1		1812	183	141.	2		0142	258	39.
1		0318	34	0.	1		1048	109	18.	1		1818	184	139.	2		0148	259	35.
1		0324	35	0.	1		1054	110	21.	1		1824	185	137.	2		0154	260	30.
1		0330	36	0.	1		1100	111	24.	1		1830	186	135.	2		0200	261	26.
1		0336	37	0.	1		1106	112	28.	1		1836	187	134.	2		0206	262	22.
1		0342	38	0.	1		1112	113	32.	1		1842	188	132.	2		0212	263	19.
1		0348	39	0.	1		1118	114	36.	1		1848	189	129.	2		0218	264	16.
1		0354	40	0.	1		1124	115	42.	1		1854	190	126.	2		0224	265	13.
1		0400	41	0.	1		1130	116	47.	1		1900	191	124.	2		0230	266	11.
1		0406	42	0.	1		1136	117	54.	1		1906	192	123.	2		0236	267	9.
1		0412	43	0.	1		1142	118	62.	1		1912	193	124.	2		0242	268	7.
1		0418	44	0.	1		1148	119	70.	1		1918	194	123.	2		0248	269	6.
1		0424	45	0.	1		1154	120	97.	1		1924	195	121.	2		0254	270	5.
1		0430	46	0.	1		1200	121	185.	1		1930	196	119.	2		0300	271	4.
1		0436	47	0.	1		1206	122	312.	1		1936	197	116.	2		0306	272	3.
1		0442	48	0.	1		1212	123	356.	1		1942	198	114.	2		0312	273	3.
1		0448	49	0.	1		1218	124	297.	1		1948	199	113.	2		0318	274	2.
1		0454	50	0.	1		1224	125	252.	1		1954	200	113.	2		0324	275	2.
1		0500	51	0.	1		1230	126	917.	1		2000	201	112.	2		0330	276	1.
1		0506	52	0.	1		1236	127	2271.	1		2006	202	110.	2		0336	277	1.
1		0512	53	0.	1		1242	128	2307.	1		2012	203	108.	2		0342	278	1.
1		0518	54	0.	1		1248	129	2135.	1		2018	204	106.	2		0348	279	1.
1		0524	55	0.	1		1254	130	2297.	1		2024	205	104.	2		0354	280	1.
1		0530	56	0.	1		1300	131	2038.	1		2030	206	103.	2		0400	281	0.
1		0536	57	0.	1		1306	132	1698.	1		2036	207	102.	2		0406	282	0.
1		0542	58	0.	1		1312	133	1485.	1		2042	208	101.	2		0412	283	0.
1		0548	59	0.	1		1318	134	1320.	1		2048	209	99.	2		0418	284	0.
1		0554	60	0.	1		1324	135	1122.	1		2054	210	97.	2		0424	285	0.
1		0600	61	0.	1		1330	136	973.	1		2100	211	96.	2		0430	286	0.
1		0606	62	0.	1		1336	137	888.	1		2106	212	94.	2		0436	287	0.
1		0612	63	0.	1		1342	138	778.	1		2112	213	93.	2		0442	288	0.
1		0618	64	0.	1		1348	139	700.	1		2118	214	92.	2		0448	289	0.
1		0624	65	0.	1		1354	140	640.	1		2124	215	91.	2		0454	290	0.
1		0630	66	0.	1		1400	141	578.	1		2130	216	89.	2		0500	291	0.
1		0636	67	0.	1		1406	142	530.	1		2136	217	87.	2		0506	292	0.
1		0642	68	0.	1		1412	143	488.	1		2142	218	86.	2		0512	293	0.
1		0648	69	0.	1		1418	144	452.	1		2148	219	86.	2		0518	294	0.
1		0654	70	0.	1		1424	145	422.	1		2154	220	86.	2		0524	295	0.
1		0700	71	0.	1		1430	146	396.	1		2200	221	86.	2		0530	296	0.
1		0706	72	0.	1		1436	147	373.	1		2206	222	86.	2		0536	297	0.
1		0712	73	0.	1		1442	148	352.	1		2212	223	86.	2		0542	298	0.
1		0718	74	0.	1		1448	149	332.	1		2218	224	84.	2		0548	299	0.
1		0724	75	0.	1		1454	150	316.	1		2224	225	82.	2		0554	300	0.

PEAK FLOW (CFS)	TIME (HR)	MAXIMUM AVERAGE FLOW (CFS) 6-HR	24-HR	72-HR	29.90-HR
+ 2307.	12.70	555.	173.	139.	139.
		(INCHES) 1.179	1.469	1.469	1.469
		(AC-FT) 275.	343.	343.	343.

CUMULATIVE AREA = 4.37 SQ MI

PEAK FLOW AND STAGE (END-OF-PERIOD) SUMMARY FOR MULTIPLE PLAN-RATIO ECONOMIC COMPUTATIONS
FLOWS IN CUBIC FEET PER SECOND, AREA IN SQUARE MILES
TIME TO PEAK IN HOURS

OPERATION	STATION	AREA	PLAN		RATIOS APPLIED TO PRECIPITATION RATIO 1 1.00	RATIO 2 .98	RATIO 3 .97
HYDROGRAPH AT +	OFF1	.53	1	FLOW	369.	357.	351.
				TIME	12.30	12.30	12.30
ROUTED TO +	ROFF1	.53	1	FLOW	412.	399.	392.
				TIME	12.60	12.60	12.60
HYDROGRAPH AT +	OFF2	.72	1	FLOW	513.	497.	489.
				TIME	12.30	12.30	12.30
ROUTED TO +	ROFF2	.72	1	FLOW	535.	522.	515.
				TIME	12.60	12.60	12.60
HYDROGRAPH AT +	OFF3	.43	1	FLOW	363.	352.	346.
				TIME	12.20	12.20	12.20
ROUTED TO +	ROFF3	.43	1	FLOW	370.	357.	350.
				TIME	12.30	12.30	12.30
HYDROGRAPH AT +	OFF4	.80	1	FLOW	733.	709.	697.
				TIME	12.10	12.10	12.10
ROUTED TO +	ROFF4	.80	1	FLOW	738.	716.	705.
				TIME	12.30	12.30	12.30
4 COMBINED AT +	CP1	2.49	1	FLOW	1521.	1479.	1458.
				TIME	12.60	12.60	12.60
ROUTED TO +	RCP1	2.49	1	FLOW	1504.	1449.	1433.
				TIME	12.80	12.90	12.90
HYDROGRAPH AT +	OFF5	.79	1	FLOW	462.	447.	439.
				TIME	12.40	12.40	12.40
ROUTED TO +	ROFF5	.79	1	FLOW	488.	472.	467.
				TIME	12.60	12.60	12.60
HYDROGRAPH AT +	OFF6	.82	1	FLOW	531.	513.	504.
				TIME	12.30	12.30	12.30
ROUTED TO +	ROFF6	.82	1	FLOW	545.	531.	524.
				TIME	12.60	12.60	12.60
3 COMBINED AT +	CP2	4.10	1	FLOW	2411.	2347.	2319.
				TIME	12.60	12.60	12.60
ROUTED TO +	RCP2	4.10	1	FLOW	2343.	2261.	2214.
				TIME	12.90	12.90	12.90
HYDROGRAPH AT +	OFF7	.28	1	FLOW	259.	250.	246.
				TIME	12.00	12.00	12.00
ROUTED TO +	ROFF7	.28	1	FLOW	269.	261.	257.
				TIME	12.20	12.20	12.20
2 COMBINED AT +	CP3	4.37	1	FLOW	2380.	2307.	2264.
				TIME	12.90	12.70	12.70

Appendix B –
Hydraulic Calculations

B-1 –
Existing Condition HEC-RAS Calculations

HEC-RAS Plan: Plan 03 River: BAT CAVE WASH Reach: BAT CAVE WASH Profile: PF 1

Reach	River Sta	Profile	Q Total	Min Ch El	W.S. Elev	Crit W.S.	E.G. Elev	E.G. Slope	Vel Chnl	Flow Area	Top Width	Froude # Chl
			(cfs)	(ft)	(ft)	(ft)	(ft)	(ft/ft)	(ft/s)	(sq ft)	(ft)	
BAT CAVE WASH	-500	PF 1	2307.00	486.00	488.40	490.10	494.50	0.043774	19.83	116.35	57.02	2.45
BAT CAVE WASH	-525	PF 1	2307.00	485.00	487.83	489.49	493.35	0.035268	18.85	122.42	54.83	2.22
BAT CAVE WASH	-550	PF 1	2307.00	485.00	487.61	489.03	492.29	0.029609	17.38	132.77	59.00	2.04
BAT CAVE WASH	-575	PF 1	2307.00	484.00	487.42	488.69	491.42	0.024639	16.06	143.62	62.57	1.87
BAT CAVE WASH	-600	PF 1	2307.00	484.00	486.61	487.81	490.75	0.028452	16.58	146.48	84.42	1.99
BAT CAVE WASH	-625	PF 1	2307.00	483.00	486.56	487.55	489.89	0.021882	14.87	163.96	93.74	1.76
BAT CAVE WASH	-650	PF 1	2307.00	483.00	486.19	487.17	489.31	0.019390	14.24	167.62	100.96	1.66
BAT CAVE WASH	-675	PF 1	2307.00	482.00	485.73	486.63	489.11	0.021826	14.75	156.50	72.64	1.76
BAT CAVE WASH	-700	PF 1	2307.00	482.00	485.60	486.43	488.42	0.019652	14.11	184.39	120.16	1.67
BAT CAVE WASH	-725	PF 1	2307.00	482.00	485.45	486.23	487.89	0.013994	13.09	198.84	115.77	1.44
BAT CAVE WASH	-750	PF 1	2307.00	482.00	485.11	485.84	487.50	0.015887	12.99	199.21	121.99	1.51
BAT CAVE WASH	-775	PF 1	2307.00	481.00	484.28	485.09	487.00	0.021162	13.63	176.99	97.84	1.70
BAT CAVE WASH	-800	PF 1	2307.00	480.30	485.59	484.60	486.28	0.002393	6.66	346.96	100.51	0.63
BAT CAVE WASH	-825	PF 1	2307.00	481.00	485.37		486.20	0.002581	7.36	321.53	94.99	0.66
BAT CAVE WASH	-850	PF 1	2307.00	480.39	484.92		486.09	0.003889	8.68	265.75	72.47	0.80
BAT CAVE WASH	-875	PF 1	2307.00	480.00	484.98		485.95	0.002649	7.90	292.09	68.03	0.67
BAT CAVE WASH	-900	PF 1	2307.00	480.00	484.44		485.82	0.004297	9.45	244.22	62.32	0.84
BAT CAVE WASH	-925	PF 1	2307.00	479.00	484.63		485.63	0.002451	8.04	287.10	60.63	0.65
BAT CAVE WASH	-950	PF 1	2307.00	479.00	484.65	483.26	485.53	0.002403	7.54	310.74	88.89	0.64
BAT CAVE WASH	-975	PF 1	2307.00	478.00	484.73	482.88	485.43	0.001758	6.79	349.83	87.11	0.55
BAT CAVE WASH	-990	PF 1	2307.00	478.00	484.83		485.36	0.001068	5.89	406.97	101.33	0.45
BAT CAVE WASH	-1000	PF 1	2307.00	478.00	484.85		485.33	0.001079	5.76	437.64	115.93	0.44
BAT CAVE WASH	-1020	PF 1	2307.00	477.00	483.32	483.32	485.16	0.005365	10.93	216.76	65.72	0.94
BAT CAVE WASH	-1035	PF 1	2307.00	476.48	484.32	480.26	484.55	0.000355	4.03	669.49	189.45	0.27
BAT CAVE WASH	-1040		Culvert									
BAT CAVE WASH	-1075	PF 1	2307.00	475.47	481.24		481.95	0.001738	6.84	354.71	106.46	0.54
BAT CAVE WASH	-1100	PF 1	2307.00	474.42	481.22		481.90	0.001825	6.63	356.72	106.75	0.56
BAT CAVE WASH	-1125	PF 1	2307.00	474.00	479.71	479.71	481.69	0.006145	11.31	204.05	52.10	1.01
BAT CAVE WASH	-1150	PF 1	2307.00	474.00	477.89	479.04	481.29	0.019551	14.82	155.72	64.50	1.68
BAT CAVE WASH	-1175	PF 1	2307.00	474.00	477.28	478.41	480.77	0.022606	14.99	155.31	79.29	1.78
BAT CAVE WASH	-1200	PF 1	2307.00	474.00	476.69	477.76	480.17	0.024590	14.97	154.11	75.09	1.84
BAT CAVE WASH	-1225	PF 1	2307.00	473.74	476.58	477.44	479.47	0.018112	13.65	169.03	75.07	1.60
BAT CAVE WASH	-1250	PF 1	2307.00	473.00	476.06	476.95	479.01	0.018224	13.79	167.31	73.64	1.61
BAT CAVE WASH	-1275	PF 1	2307.00	472.42	475.73	476.57	478.53	0.016798	13.43	172.18	76.78	1.55
BAT CAVE WASH	-1300	PF 1	2307.00	472.59	475.60	476.28	477.99	0.016300	12.42	185.75	88.17	1.51
BAT CAVE WASH	-1325	PF 1	2307.00	472.22	477.15	475.64	477.63	0.001622	5.60	412.45	116.13	0.52
BAT CAVE WASH	-1350	PF 1	2307.00	472.00	477.14		477.59	0.001143	5.59	457.76	135.92	0.46
BAT CAVE WASH	-1375	PF 1	2307.00	472.00	477.13		477.55	0.001088	5.49	469.21	138.95	0.44
BAT CAVE WASH	-1400	PF 1	2307.00	472.00	477.08	475.17	477.53	0.001089	5.51	441.34	106.51	0.44

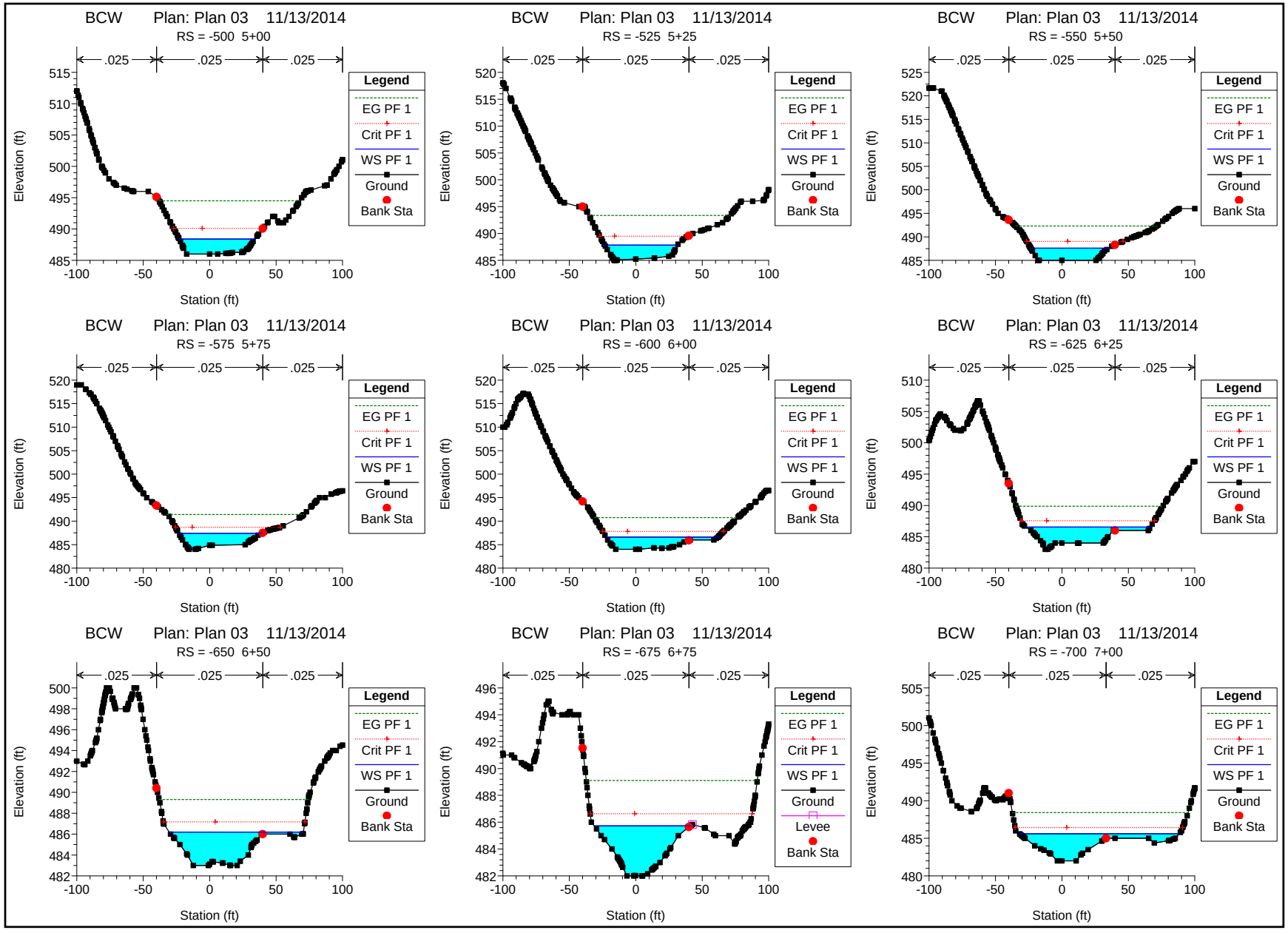
BCW Plan: Plan 03 11/13/2014
RS = -500 5+00
RS = -525 5+25
RS = -550 5+50
RS = -575 5+75
RS = -600 6+00
RS = -625 6+25
RS = -650 6+50
RS = -675 6+75
RS = -700 7+00
.025
Legend
EG PF 1
Crit PF 1
WS PF 1
Ground
Levee
Bank Sta
Elevation (ft)
Station (ft)

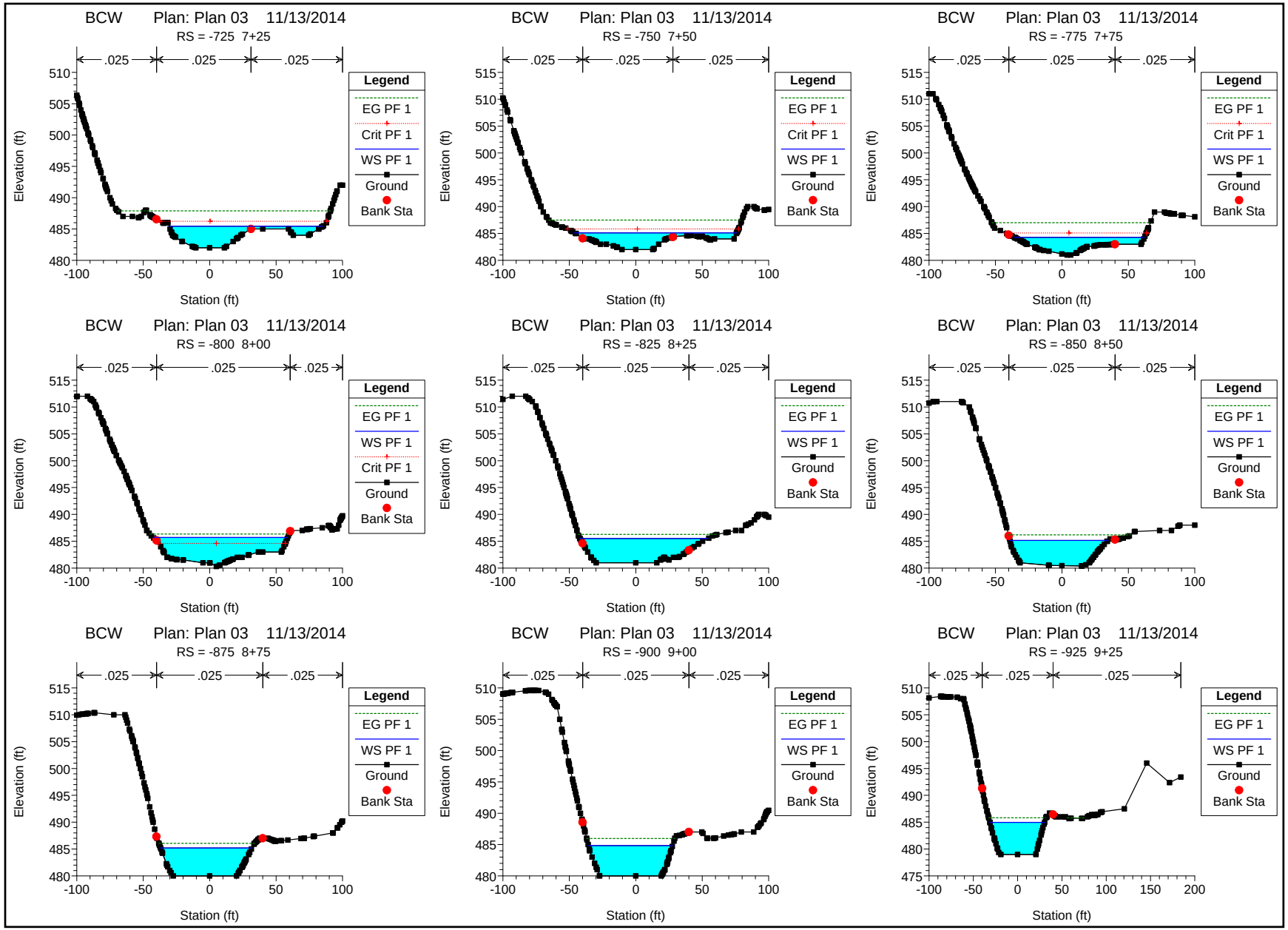
BCW Plan: Plan 03 11/13/2014
RS = -725 7+25
RS = -750 7+50
RS = -775 7+75
RS = -800 8+00
RS = -825 8+25
RS = -850 8+50
RS = -875 8+75
RS = -900 9+00
RS = -925 9+25
.025
Legend
EG PF 1
Crit PF 1
WS PF 1
Ground
Bank Sta
Elevation (ft)
Station (ft)

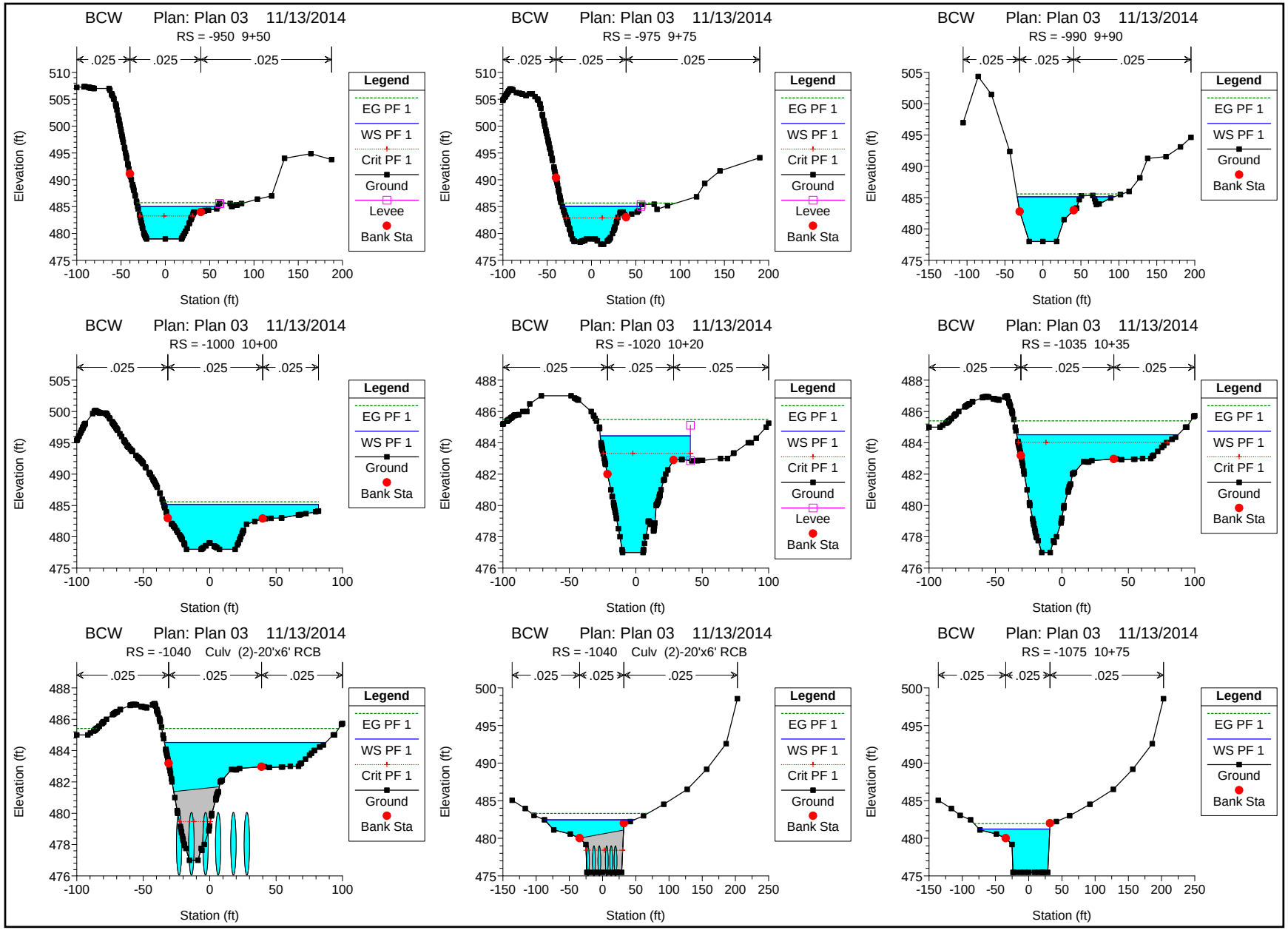
BCW Plan: Plan 03 11/13/2014
RS = -950 9+50
RS = -975 9+75
RS = -990 9+90
RS = -1000 10+00
RS = -1020 10+20
RS = -1035 10+35
RS = -1040 Culv (2)-20'x6' RCB
RS = -1040 Culv (2)-20'x6' RCB
RS = -1075 10+75
.025
Legend
EG PF 1
WS PF 1
Crit PF 1
Ground
Levee
Bank Sta
Elevation (ft)
Station (ft)

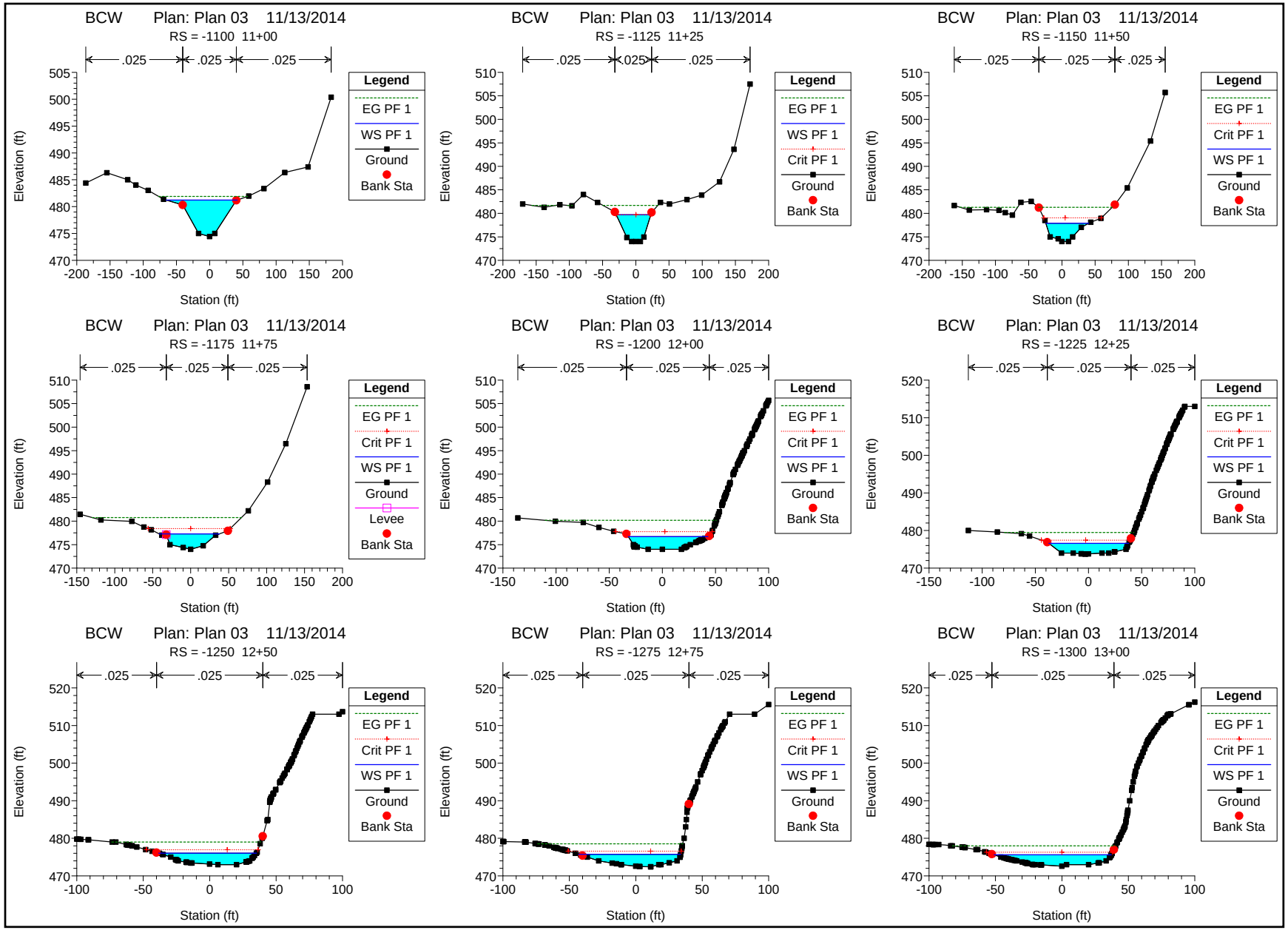
BCW Plan: Plan 03 11/13/2014
RS = -1100 11+00
RS = -1125 11+25
RS = -1150 11+50
RS = -1175 11+75
RS = -1200 12+00
RS = -1225 12+25
RS = -1250 12+50
RS = -1275 12+75
RS = -1300 13+00
.025
Legend
EG PF 1
Crit PF 1
WS PF 1
Ground
Levee
Bank Sta
Elevation (ft)
Station (ft)

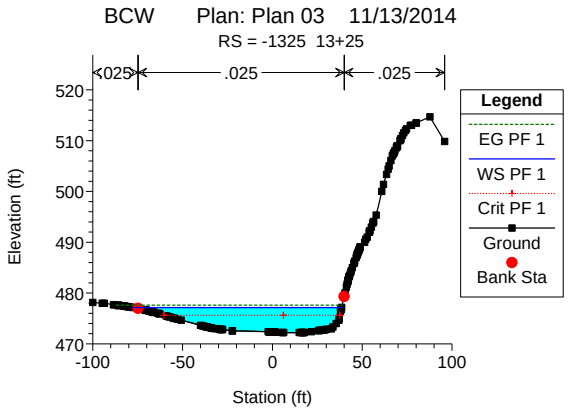
BCW Plan: Plan 03 11/13/2014
RS = -1325 13+25
.025
.025
.025
Legend
EG PF 1
WS PF 1
Crit PF 1
Ground
Bank Sta
Elevation (ft)
Station (ft)

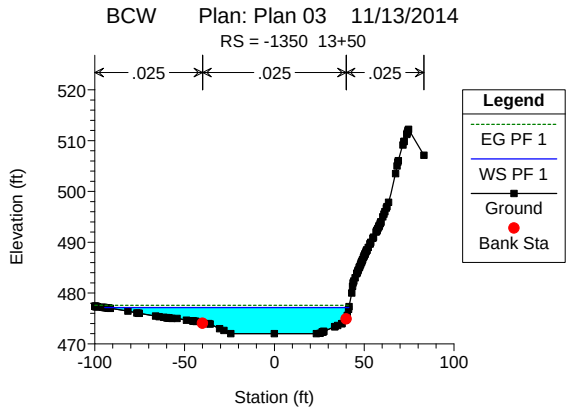
BCW Plan: Plan 03 11/13/2014
RS = -1350 13+50
.025
.025
.025
Legend
EG PF 1
WS PF 1
Ground
Bank Sta
Elevation (ft)
Station (ft)

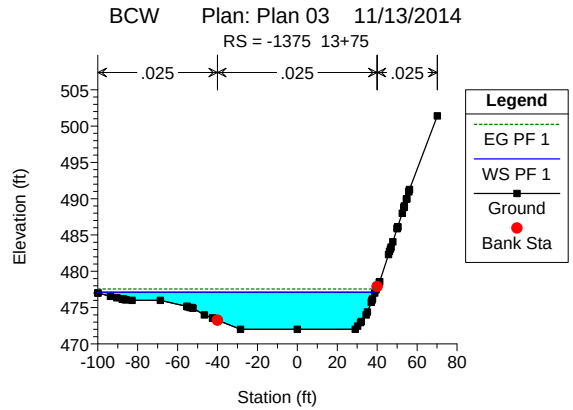
BCW Plan: Plan 03 11/13/2014
RS = -1375 13+75
.025
.025
.025
Legend
EG PF 1
WS PF 1
Ground
Bank Sta
Elevation (ft)
Station (ft)

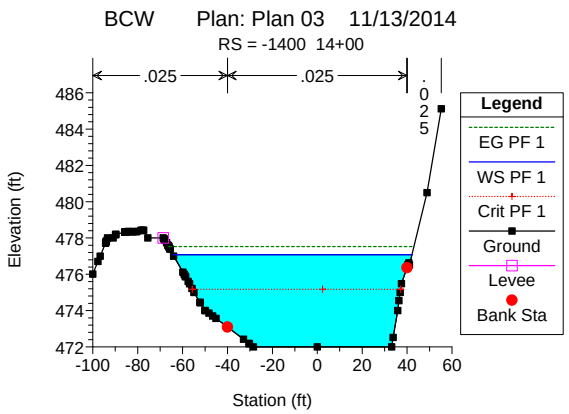
BCW Plan: Plan 03 11/13/2014
RS = -1400 14+00
.025
.025
.025
Legend
EG PF 1
WS PF 1
Crit PF 1
Ground
Levee
Bank Sta
Elevation (ft)
Station (ft)

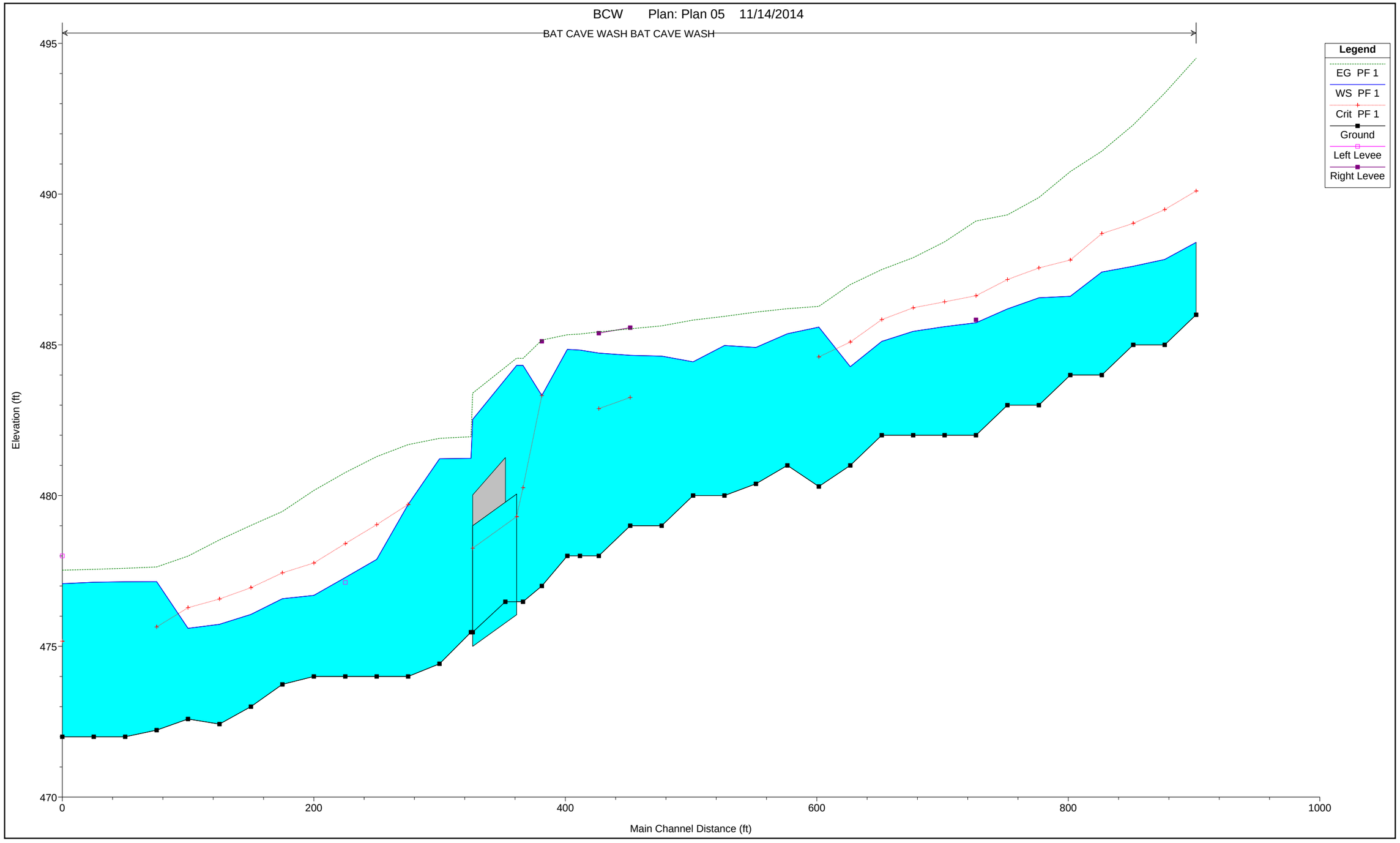
BCW Plan: Plan 05 11/14/2014
BAT CAVE WASH BAT CAVE WASH
Legend
EG PF 1
WS PF 1
Crit PF 1
Ground
Left Levee
Right Levee
Elevation (ft)
495
490
485
480
475
470
0
200
400
600
800
1000
Main Channel Distance (ft)

B-2 –
Proposed Condition HEC-RAS Calculations

HEC-RAS Plan: Plan 03 River: BAT CAVE WASH Reach: BAT CAVE WASH Profile: PF 1

Reach	River Sta	Profile	Q Total	Min Ch El	W.S. Elev	Crit W.S.	E.G. Elev	E.G. Slope	Vel Chnl	Flow Area	Top Width	Froude # Chl
			(cfs)	(ft)	(ft)	(ft)	(ft)	(ft/ft)	(ft/s)	(sq ft)	(ft)	
BAT CAVE WASH	-500	PF 1	2307.00	486.00	488.40	490.10	494.50	0.043774	19.83	116.35	57.02	2.45
BAT CAVE WASH	-525	PF 1	2307.00	485.00	487.83	489.49	493.35	0.035268	18.85	122.42	54.83	2.22
BAT CAVE WASH	-550	PF 1	2307.00	485.00	487.61	489.03	492.29	0.029609	17.38	132.77	59.00	2.04
BAT CAVE WASH	-575	PF 1	2307.00	484.00	487.42	488.69	491.42	0.024639	16.06	143.62	62.57	1.87
BAT CAVE WASH	-600	PF 1	2307.00	484.00	486.61	487.81	490.75	0.028452	16.58	146.48	84.42	1.99
BAT CAVE WASH	-625	PF 1	2307.00	483.00	486.56	487.55	489.89	0.021882	14.87	163.96	93.74	1.76
BAT CAVE WASH	-650	PF 1	2307.00	483.00	486.19	487.17	489.31	0.019390	14.24	167.62	100.96	1.66
BAT CAVE WASH	-675	PF 1	2307.00	482.00	485.73	486.63	489.11	0.021826	14.75	156.50	72.64	1.76
BAT CAVE WASH	-700	PF 1	2307.00	482.00	485.60	486.43	488.42	0.019652	14.11	184.39	120.16	1.67
BAT CAVE WASH	-725	PF 1	2307.00	482.00	485.45	486.23	487.89	0.013994	13.09	198.84	115.77	1.44
BAT CAVE WASH	-750	PF 1	2307.00	482.00	485.11	485.84	487.50	0.015887	12.99	199.21	121.99	1.51
BAT CAVE WASH	-775	PF 1	2307.00	481.00	484.28	485.09	487.00	0.021162	13.63	176.99	97.84	1.70
BAT CAVE WASH	-800	PF 1	2307.00	480.30	485.57	484.60	486.27	0.002436	6.69	345.07	100.39	0.63
BAT CAVE WASH	-825	PF 1	2307.00	481.00	485.34		486.19	0.002639	7.41	319.17	94.74	0.67
BAT CAVE WASH	-850	PF 1	2307.00	480.39	484.87		486.07	0.004051	8.80	262.15	72.24	0.81
BAT CAVE WASH	-875	PF 1	2307.00	480.00	484.94		485.93	0.002722	7.97	289.47	67.89	0.68
BAT CAVE WASH	-900	PF 1	2307.00	480.00	483.98	483.98	485.75	0.006257	10.67	216.14	61.12	1.00
BAT CAVE WASH	-925	PF 1	2307.00	479.00	482.60	483.30	485.43	0.011583	13.50	170.93	53.93	1.34
BAT CAVE WASH	-950	PF 1	2307.00	479.00	483.26	483.26	485.06	0.006200	10.79	213.90	59.22	1.00
BAT CAVE WASH	-975	PF 1	2307.00	478.00	482.40	482.88	484.81	0.009396	12.46	185.10	56.35	1.21
BAT CAVE WASH	-990	PF 1	2307.00	478.00	483.49	482.53	484.47	0.002826	7.94	291.88	76.26	0.69
BAT CAVE WASH	-1000	PF 1	2307.00	478.00	483.17	482.61	484.41	0.004019	8.94	258.16	68.61	0.81
BAT CAVE WASH	-1015	PF 1	2307.00	477.66	482.41	482.38	484.27	0.006087	10.95	210.61	56.04	1.00
BAT CAVE WASH	-1020	PF 1	2307.00	477.00	482.79	482.07	484.07	0.004448	9.68	256.67	62.70	0.71
BAT CAVE WASH	-1035	PF 1	2307.00	476.48	483.39	480.26	483.75	0.001001	5.17	521.12	140.06	0.35
BAT CAVE WASH	-1040		Bridge									
BAT CAVE WASH	-1075	PF 1	2307.00	475.47	481.21		481.98	0.002491	7.21	351.82	106.16	0.53
BAT CAVE WASH	-1100	PF 1	2307.00	474.42	481.22		481.90	0.001825	6.63	356.72	106.75	0.56
BAT CAVE WASH	-1125	PF 1	2307.00	474.00	479.71	479.71	481.69	0.006145	11.31	204.05	52.10	1.01
BAT CAVE WASH	-1150	PF 1	2307.00	474.00	477.89	479.04	481.29	0.019551	14.82	155.72	64.50	1.68
BAT CAVE WASH	-1175	PF 1	2307.00	474.00	477.28	478.41	480.77	0.022606	14.99	155.31	79.29	1.78
BAT CAVE WASH	-1200	PF 1	2307.00	474.00	476.69	477.76	480.17	0.024590	14.97	154.11	75.09	1.84
BAT CAVE WASH	-1225	PF 1	2307.00	473.74	476.58	477.44	479.47	0.018112	13.65	169.03	75.07	1.60
BAT CAVE WASH	-1250	PF 1	2307.00	473.00	476.06	476.95	479.01	0.018224	13.79	167.31	73.64	1.61
BAT CAVE WASH	-1275	PF 1	2307.00	472.42	475.73	476.57	478.53	0.016798	13.43	172.18	76.78	1.55
BAT CAVE WASH	-1300	PF 1	2307.00	472.59	475.60	476.28	477.99	0.016300	12.42	185.75	88.17	1.51
BAT CAVE WASH	-1325	PF 1	2307.00	472.22	477.15	475.64	477.63	0.001622	5.60	412.45	116.13	0.52
BAT CAVE WASH	-1350	PF 1	2307.00	472.00	477.14		477.59	0.001143	5.59	457.76	135.92	0.46
BAT CAVE WASH	-1375	PF 1	2307.00	472.00	477.13		477.55	0.001088	5.49	469.21	138.95	0.44
BAT CAVE WASH	-1400	PF 1	2307.00	472.00	477.08	475.17	477.53	0.001089	5.51	441.34	106.51	0.44

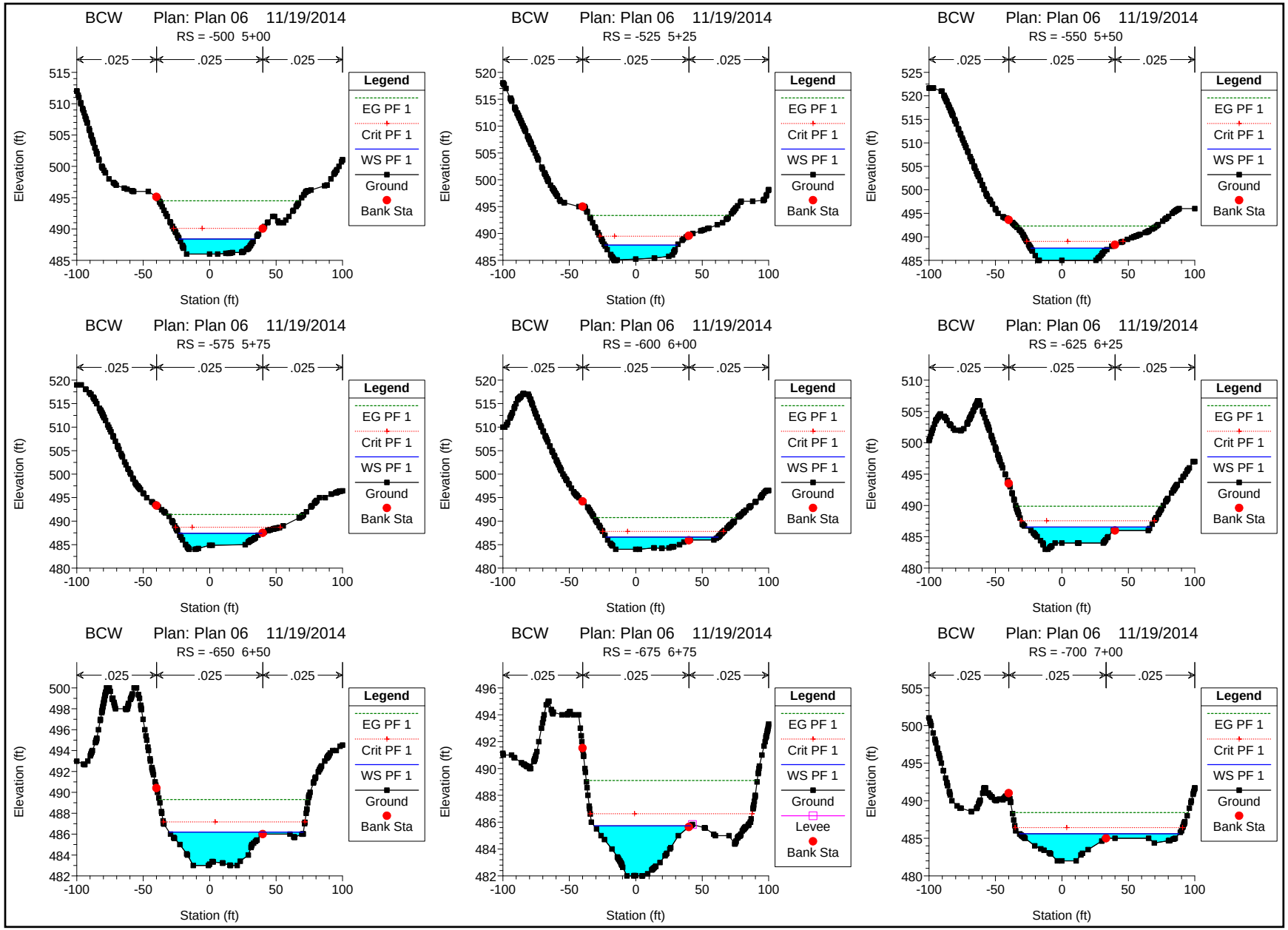
BCW Plan: Plan 06 11/19/2014
RS = -500 5+00
RS = -525 5+25
RS = -550 5+50
RS = -575 5+75
RS = -600 6+00
RS = -625 6+25
RS = -650 6+50
RS = -675 6+75
RS = -700 7+00
.025
Elevation (ft)
Station (ft)
Legend
EG PF 1
Crit PF 1
WS PF 1
Ground
Levee
Bank Sta

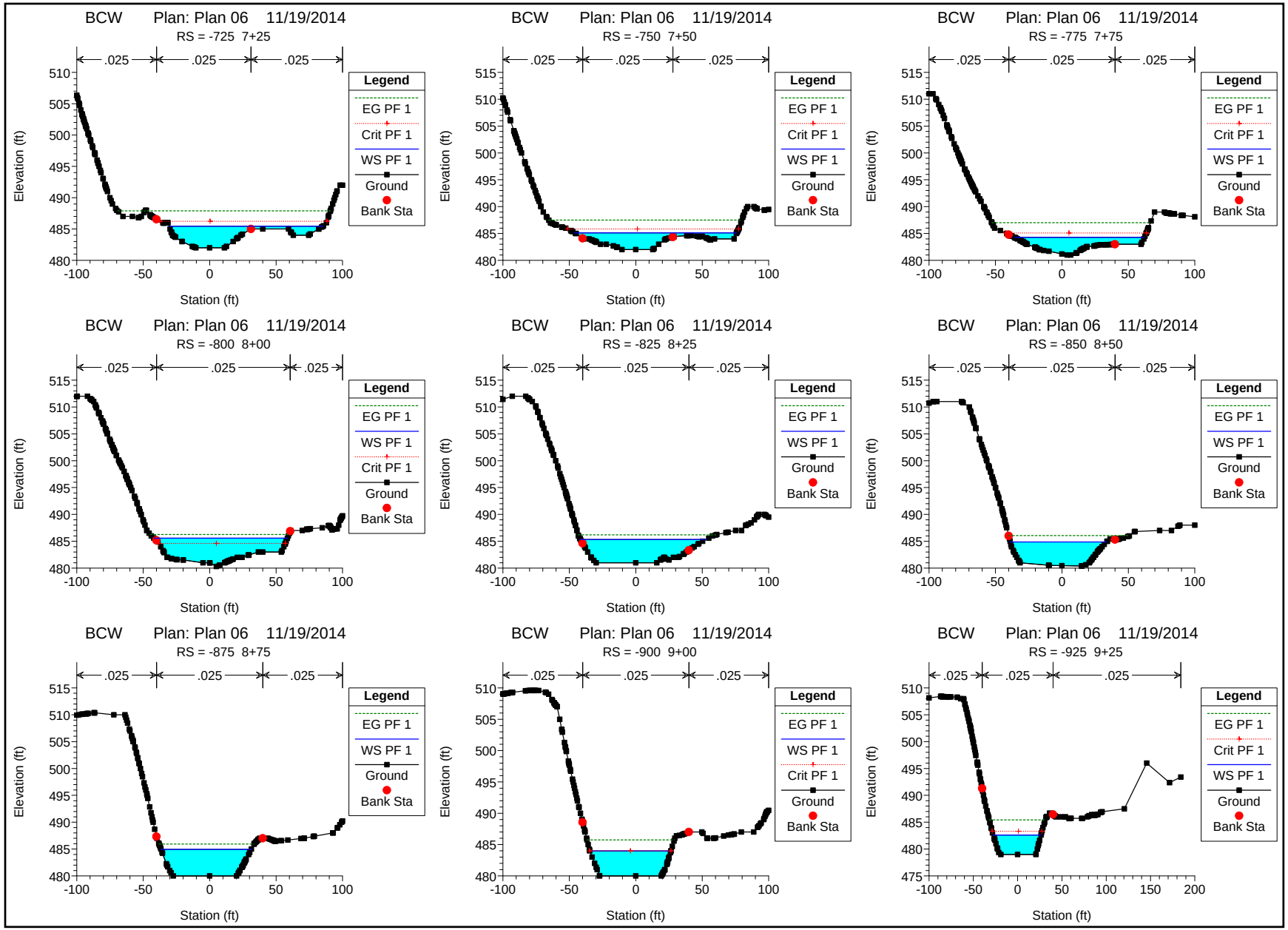
BCW Plan: Plan 06 11/19/2014
RS = -725 7+25
RS = -750 7+50
RS = -775 7+75
RS = -800 8+00
RS = -825 8+25
RS = -850 8+50
RS = -875 8+75
RS = -900 9+00
RS = -925 9+25
.025
Legend
EG PF 1
Crit PF 1
WS PF 1
Ground
Bank Sta
Elevation (ft)
Station (ft)

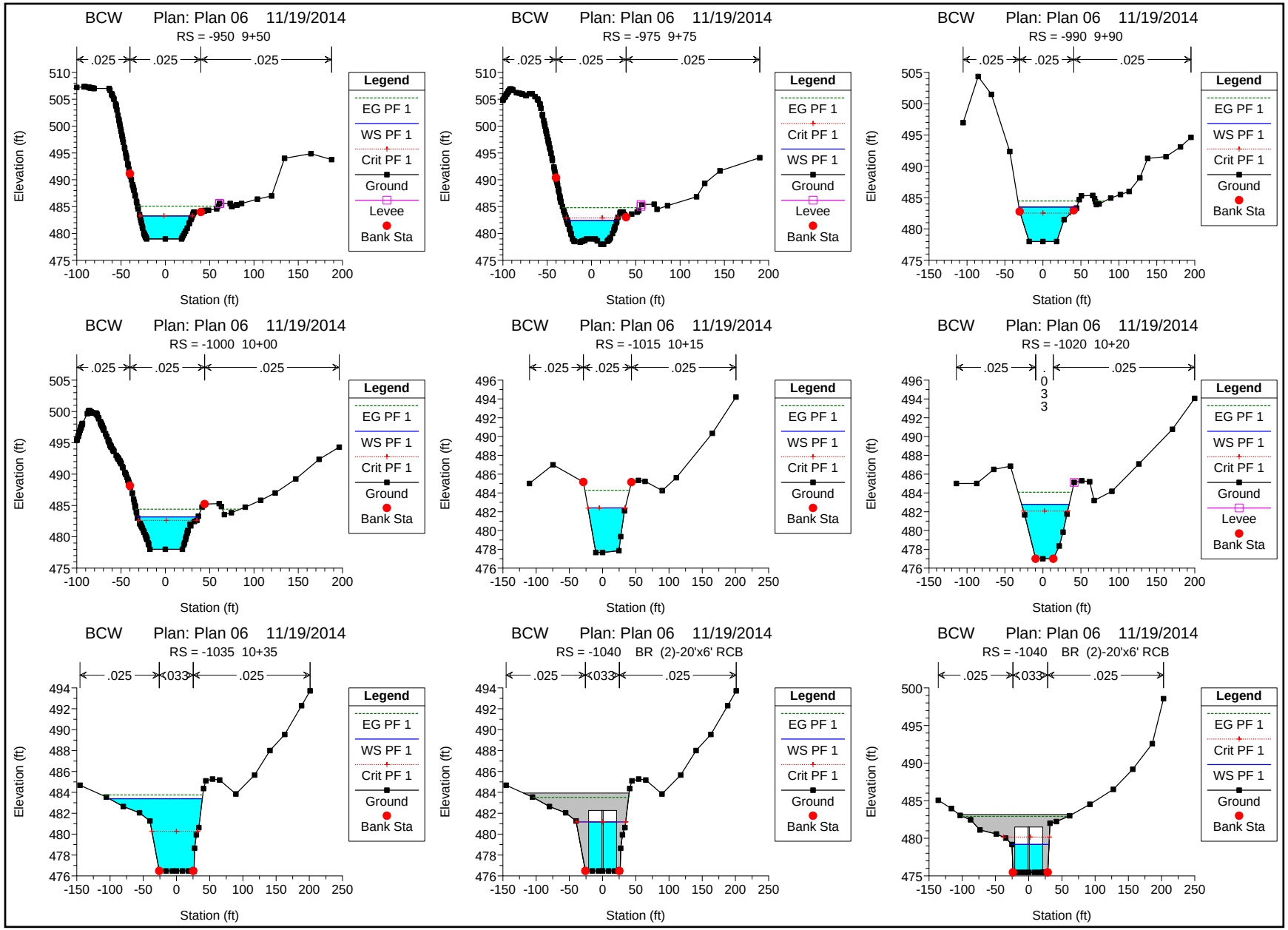
BCW Plan: Plan 06 11/19/2014
RS = -950 9+50
RS = -975 9+75
RS = -990 9+90
RS = -1000 10+00
RS = -1015 10+15
RS = -1020 10+20
RS = -1035 10+35
RS = -1040 BR (2)-20'x6' RCB
.025
.033
Elevation (ft)
Station (ft)
Legend
EG PF 1
WS PF 1
Crit PF 1
Ground
Levee
Bank Sta

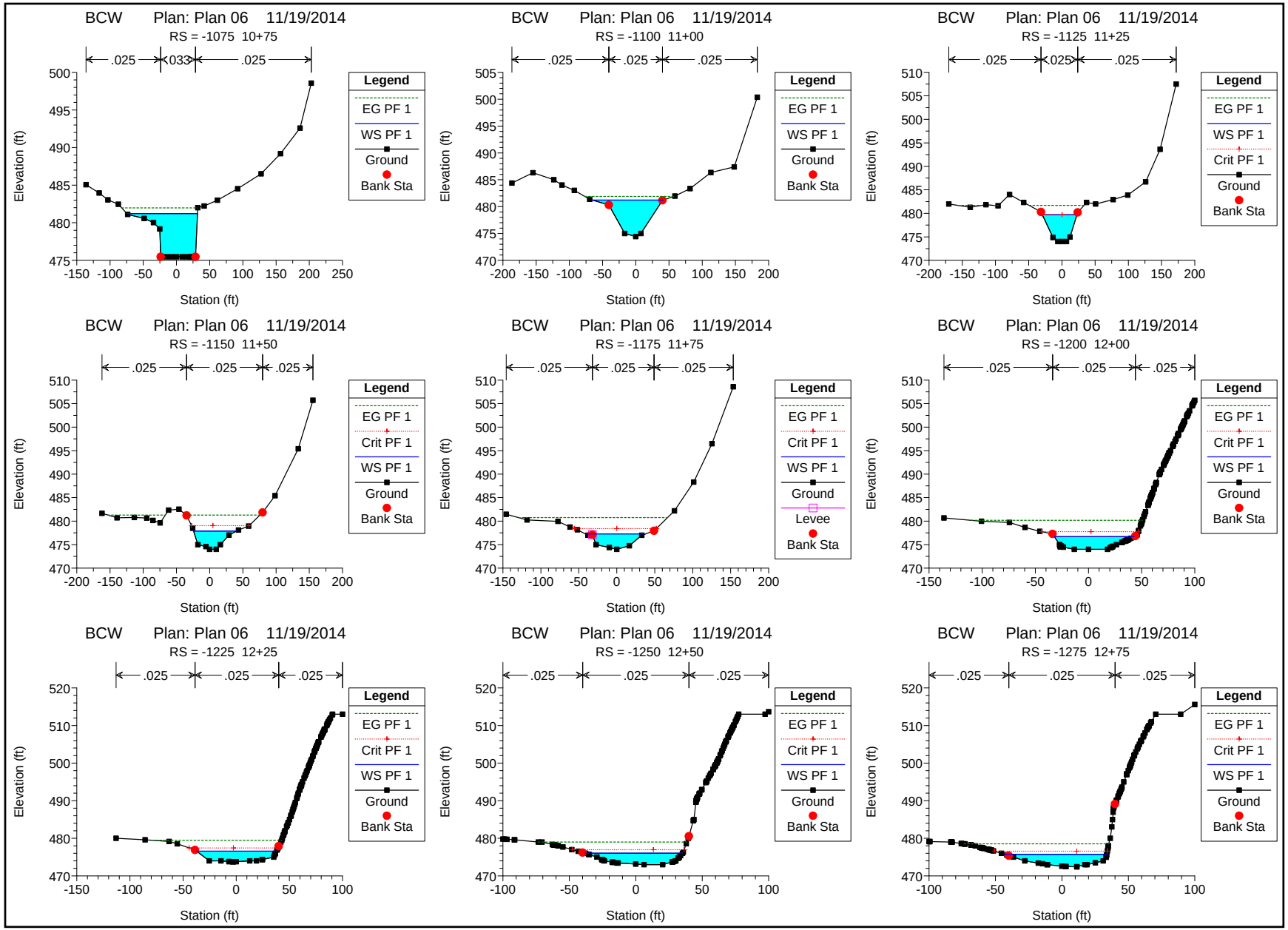
BCW Plan: Plan 06 11/19/2014
RS = -1075 10+75
.025 .033 .025
Legend
EG PF 1
WS PF 1
Ground
Bank Sta
Elevation (ft)
Station (ft)
BCW Plan: Plan 06 11/19/2014
RS = -1100 11+00
.025 .025 .025
Legend
EG PF 1
WS PF 1
Ground
Bank Sta
Elevation (ft)
Station (ft)
BCW Plan: Plan 06 11/19/2014
RS = -1125 11+25
.025 .025 .025
Legend
EG PF 1
WS PF 1
Crit PF 1
Ground
Bank Sta
Elevation (ft)
Station (ft)
BCW Plan: Plan 06 11/19/2014
RS = -1150 11+50
.025 .025 .025
Legend
EG PF 1
Crit PF 1
WS PF 1
Ground
Bank Sta
Elevation (ft)
Station (ft)
BCW Plan: Plan 06 11/19/2014
RS = -1175 11+75
.025 .025 .025
Legend
EG PF 1
Crit PF 1
WS PF 1
Ground
Levee
Bank Sta
Elevation (ft)
Station (ft)
BCW Plan: Plan 06 11/19/2014
RS = -1200 12+00
.025 .025 .025
Legend
EG PF 1
Crit PF 1
WS PF 1
Ground
Bank Sta
Elevation (ft)
Station (ft)
BCW Plan: Plan 06 11/19/2014
RS = -1225 12+25
.025 .025 .025
Legend
EG PF 1
Crit PF 1
WS PF 1
Ground
Bank Sta
Elevation (ft)
Station (ft)
BCW Plan: Plan 06 11/19/2014
RS = -1250 12+50
.025 .025 .025
Legend
EG PF 1
Crit PF 1
WS PF 1
Ground
Bank Sta
Elevation (ft)
Station (ft)
BCW Plan: Plan 06 11/19/2014
RS = -1275 12+75
.025 .025 .025
Legend
EG PF 1
Crit PF 1
WS PF 1
Ground
Bank Sta
Elevation (ft)
Station (ft)

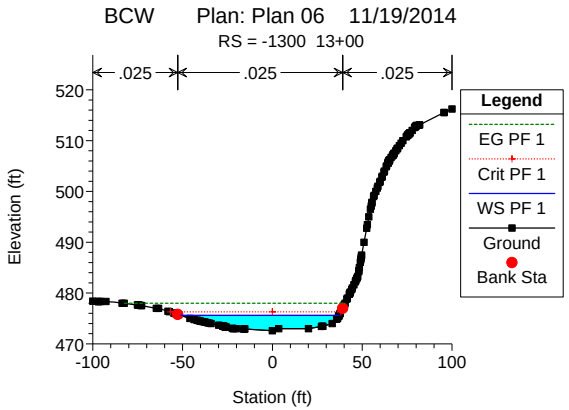
BCW Plan: Plan 06 11/19/2014
RS = -1300 13+00
.025
.025
.025
Legend
EG PF 1
Crit PF 1
WS PF 1
Ground
Bank Sta
Elevation (ft)
Station (ft)

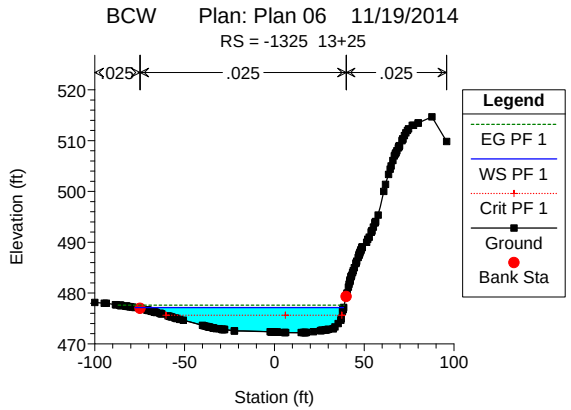
BCW Plan: Plan 06 11/19/2014
RS = -1325 13+25
.025
.025
.025
Legend
EG PF 1
WS PF 1
Crit PF 1
Ground
Bank Sta
Elevation (ft)
Station (ft)

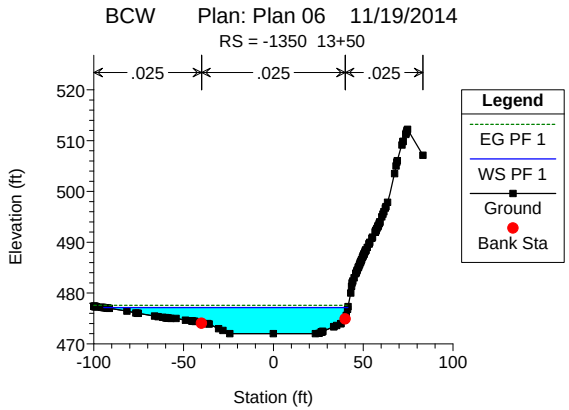
BCW Plan: Plan 06 11/19/2014
RS = -1350 13+50
.025
.025
.025
Legend
EG PF 1
WS PF 1
Ground
Bank Sta
Elevation (ft)
Station (ft)

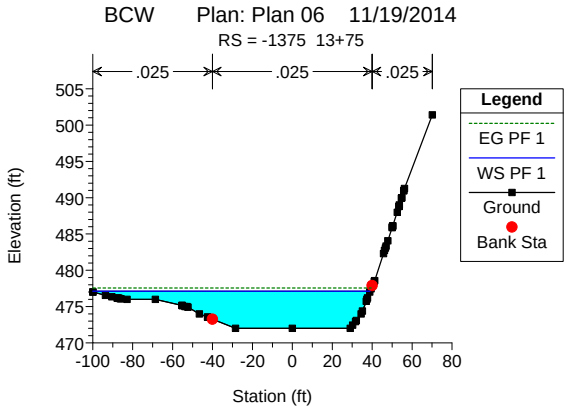
BCW Plan: Plan 06 11/19/2014
RS = -1375 13+75
.025
.025
.025
Legend
EG PF 1
WS PF 1
Ground
Bank Sta
Elevation (ft)
Station (ft)

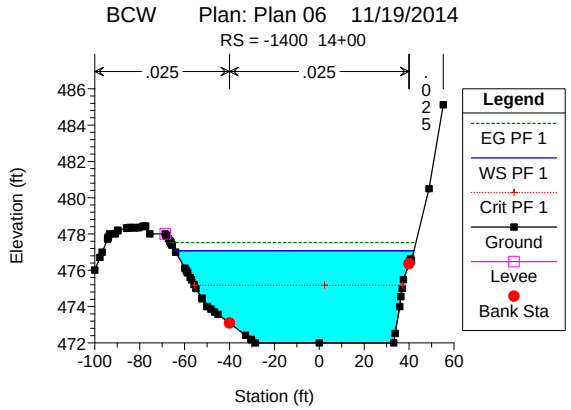
BCW Plan: Plan 06 11/19/2014
RS = -1400 14+00
.025
.025
.025
Legend
EG PF 1
WS PF 1
Crit PF 1
Ground
Levee
Bank Sta
Elevation (ft)
Station (ft)

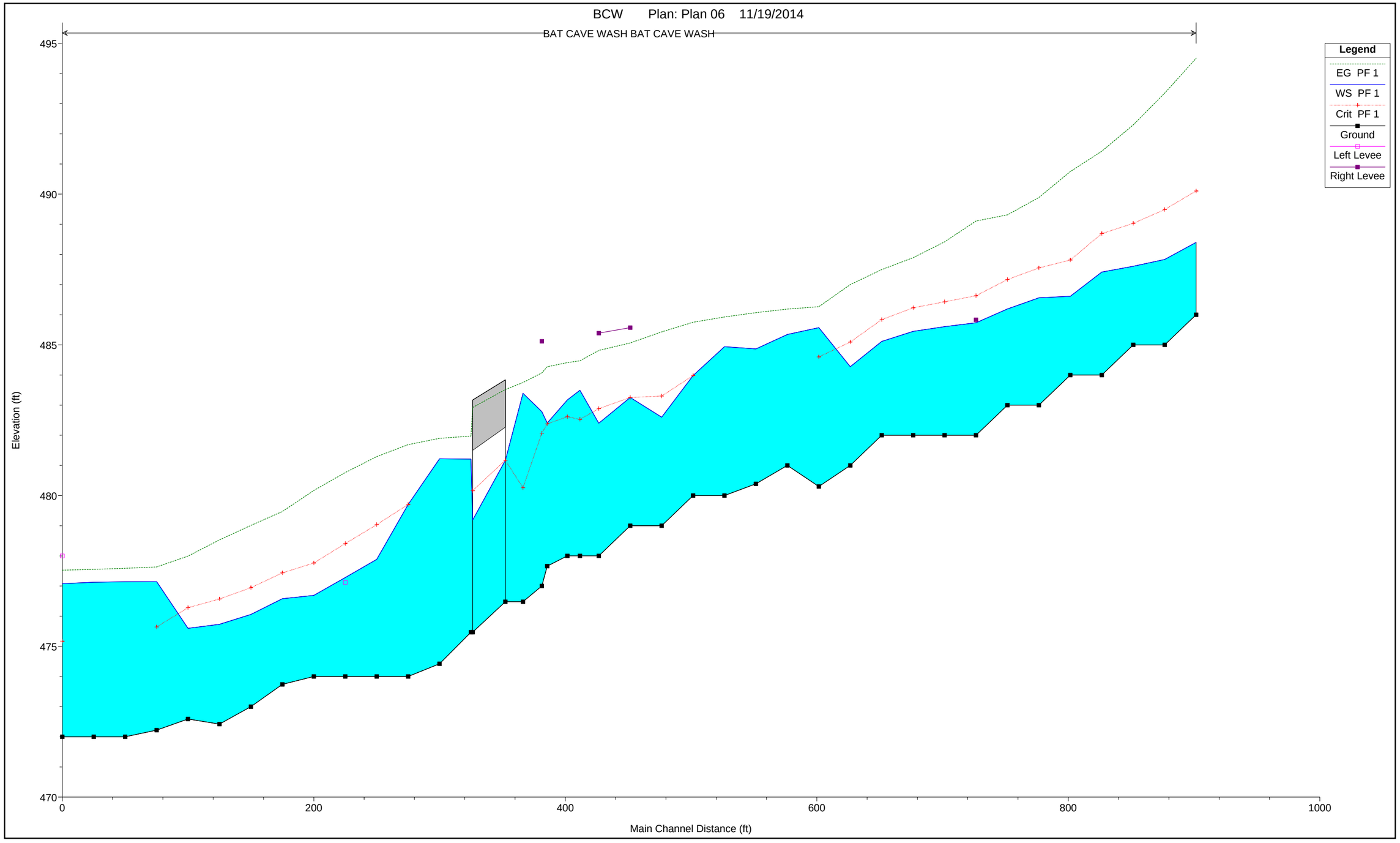
BCW Plan: Plan 06 11/19/2014
BAT CAVE WASH BAT CAVE WASH
Legend
EG PF 1
WS PF 1
Crit PF 1
Ground
Left Levee
Right Levee
Elevation (ft)
495
490
485
480
475
470
0
200
400
600
800
1000
Main Channel Distance (ft)

B-3 –
Riprap Sizing Calculations

Project _____

Description _____

Prepared by/date _____ / _____

Checked by/date _____ / _____

sheet _____ of _____

Definition Sketch:

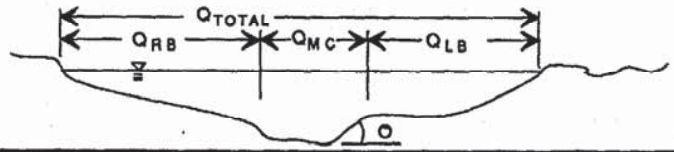

Q_{TOTAL} _____

Q_{MC} _____

Q_{LB} _____

Q_{RB} _____

Soil Characteristics:

D_{15} _____

D_{50} _____

D_{85} _____

DEPTH OR W.S. (ft) ①	A (ft^2) ②	V_a (ft/sec) ③	d_a (ft) ④	θ ⑤	Φ ⑥	K_1 ⑦	D_{50} (ft) ⑧	SF ⑨	S_s ⑩	C ⑪	$C_{P/A}$ ⑫	D_{50} (ft) ⑬	NOTES ⑭
5.80	256.7	9.68	5.80	2:1	41°	0.73	0.60	1.2	2.65	1	N/A	0.60	Use d50 = 1.0'

Design Sketch

RIPRAP CHARACTERISTICS:

Size:

D_{50} _____

Class _____

Thickness:

$2D_{50}$ _____

D_{100} _____

Use _____

AASHTO Gradation:

Size: (ft)	Percent Finer
_____	100
_____	50
_____	5-10

FABRIC CHARACTERISTICS:

Granular:

Size (ft)	Percent Finer
_____	85
_____	50
_____	15

Fabric:

AOS* < _____

Perm.> _____

*Average Opening Size

① Water Surface Elevation
② Main channel flow area
③ Main channel average velocity
④ Main channel average depth
⑤ Bank angle
⑥ Riprap angle of repose (Chart 4)
⑦ Bank angle correction (Chart 3)
⑧ Riprap size (Chart 1)
⑨ Stability Factor
⑩ Riprap specific gravity
⑪ Riprap size correction factor (Chart 2)
⑫ Pier/Abutment Correction (3.38 if applicable)
⑬ Correction D_{50} = ⑧ • ⑪ • ⑫
⑭ Notes or Comments

Form 1. Riprap size - particle erosion

$$D_{50} = 0.001\, V_a^3 / (d_{avg}^{1/2} K_1^{3/2})$$

D_{50} = Median Riprap Size (ft.)

V_a = Average velocity in main channel (ft/sec)

d_{avg} = Average depth in main channel (ft)

K_1 = Bank angle correction term

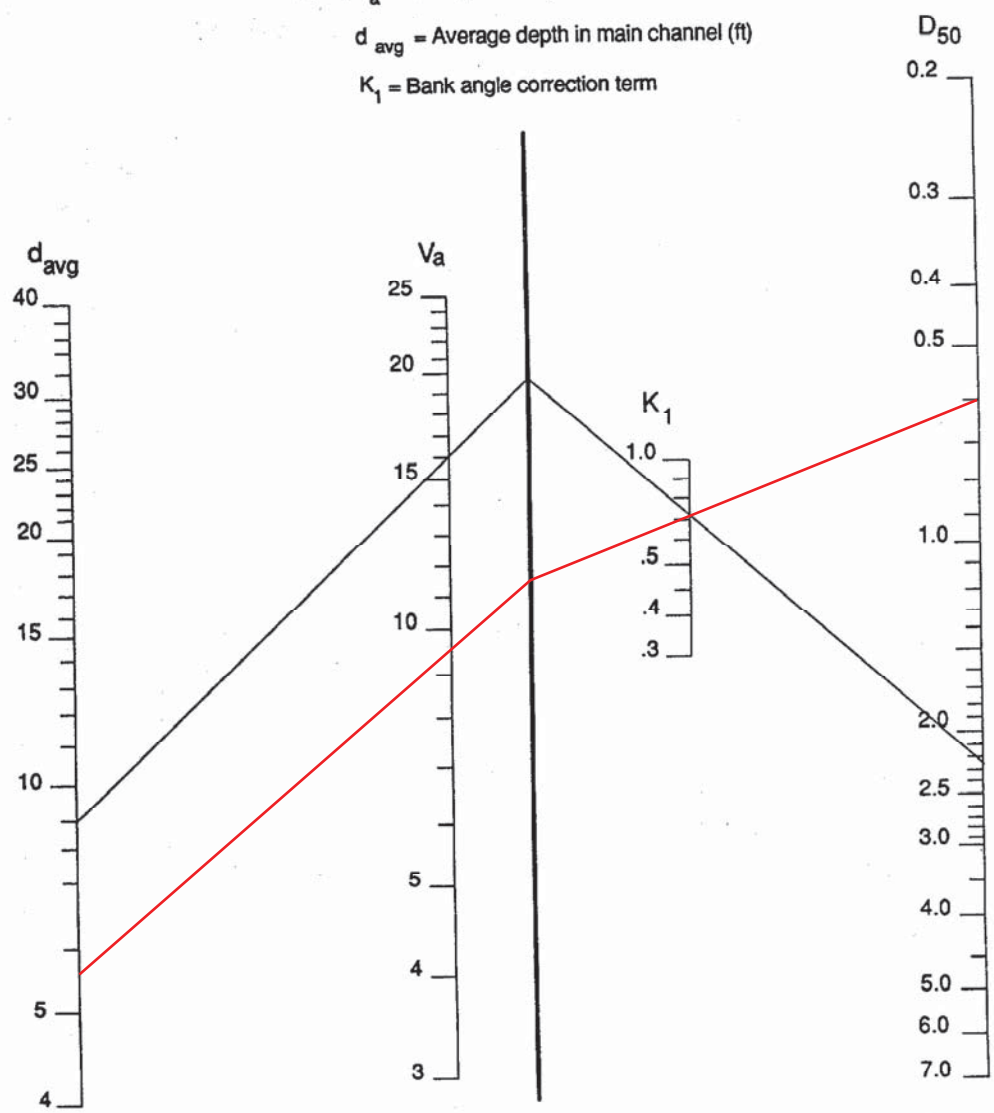

Example

Given:
V_a = 16 ft/sec
d_{avg} = 9 ft
K_1 = 0.72

Find:
D_{50}

Solution:
D_{50} = 2.25

Chart 1. Riprap size relationship

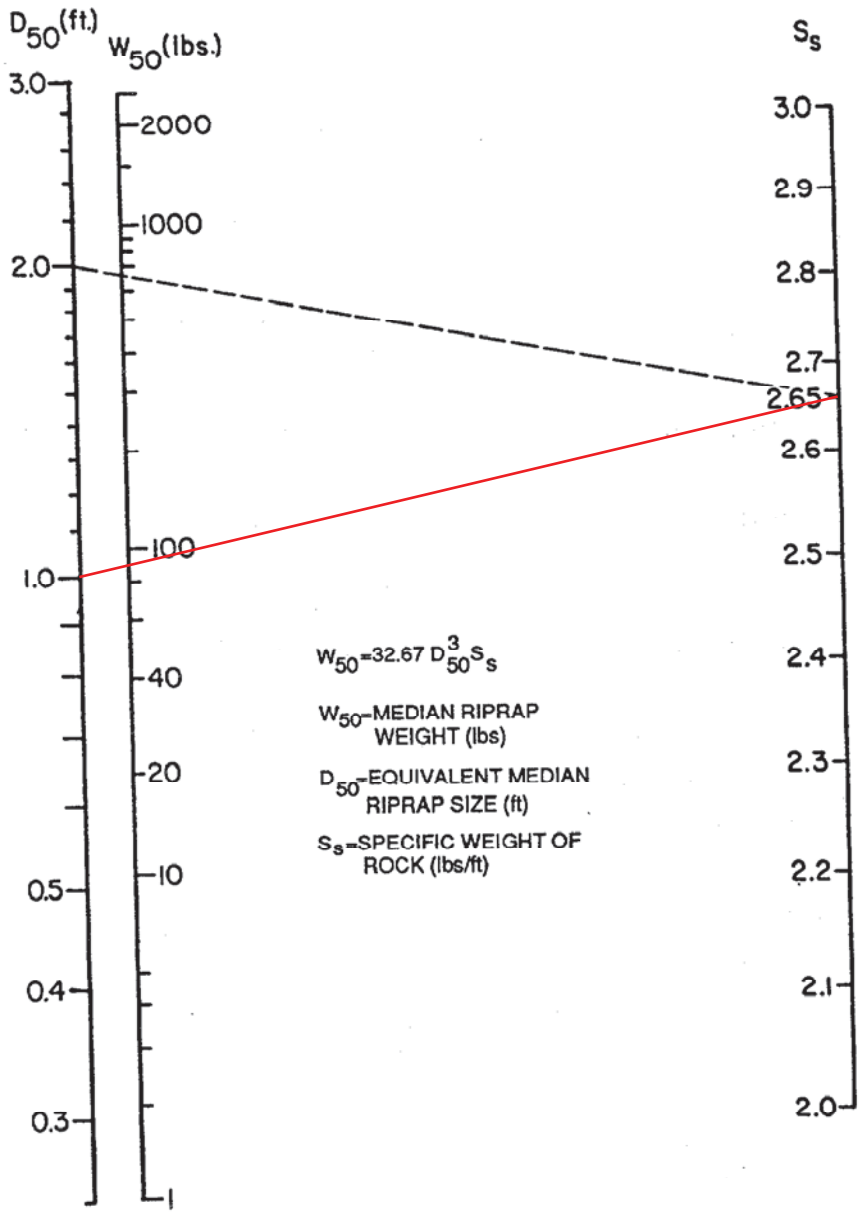

EXAMPLE

GIVEN:	FIND:	SOLUTION:
D_{50}=2.0 ft.	W_{50}	W_{50}-680 lbs
S_s=2.65		

Chart 5. Conversion from equivalent D_{50} in feet to W_{50} in pounds

Appendix C –
RCB Structural Calculations

BRASS-CULVERT

```
                    BRASS-CULVERT(LRFD)  Version 2.2.9a


  DATE : 10/30/2014        TIME :  8:26:18                    PAGE  1

 Input Filename                   : C:\Projects\Bat Cave Wash\BRASSCULVERT\BOXCULVERT2.DAT
 Output Filename                  : C:\Projects\Bat Cave Wash\BRASSCULVERT\BOXCULVERT2.xml
 Output Filename for Live Loads   : C:\Projects\Bat Cave Wash\BRASSCULVERT\BOXCULVERT2_LL.OUT

 The following filenames may be used in this run
 Live Load Influence Values       File name : C:\Projects\Bat Cave Wash\BRASSCULVERT\BOXCULVERT2_INF.OUT
 Drawing                          File name : C:\Projects\Bat Cave Wash\BRASSCULVERT\BOXCULVERT2.drw
 Live Load Influence Ordinates    File name : C:\Projects\Bat Cave Wash\BRASSCULVERT\BOXCULVERT2.ill
 Live Load Actions (w/o DF or IM) File name : C:\Projects\Bat Cave Wash\BRASSCULVERT\BOXCULVERT2.oll
 Intermediate Computations        File name : C:\Projects\Bat Cave Wash\BRASSCULVERT\BOXCULVERT2.ooo
 Data Modelling                   File name : C:\Projects\Bat Cave Wash\BRASSCULVERT\BOXCULVERT2.tmp

COMMENTS              THIS FILE WAS CREATED BY THE BRASS-CULVERT GUI.
COMMENTS              DO NOT EDIT THIS FILE!
COMMENTS             JOB DESCRIPTION:
TITLE                TOPROCK COMPRESSOR STATION
STRUCTID             BOX CULVERT
AGENCY               PG&E
COMMENTS             140 PCF VERTICAL& 140 PCF HORIZONTAL

COMMENTS             MANUALLY INPUT LANE LOAD SINCE BRASS WON'T COMBINE TRUCK AND LANE...

COMMENTS             DF = 10+5*SQRT(20'*25.67') = 12.25' (AASHTO EQN. 4.6.2.3-1)

COMMENTS             (1.75 FACTOR)(640 PLF)(1.2 MPF)(1.33 IM)/(12.25' DF) = 146 PLF/FT

COMMENTS             ADD (1.25 FACTOR)(75 PLF)(2 RAILS)/(25'-8") = 7 PLF/FT

COMMENTS             TOTAL UNIFORM LOAD = 153 PLF/FT

COMMENTS
UNITSIN              US
UNITSOUT             US
COMMENTS             ANALYSIS CONTROL:
TYPE                 CIP
FUNCT                DESREV
IRELEASE             NO
IDSN                 LRFD
KBASE                FULL
KHACH                YES
EPOXY                NO
EDGE-STRIP           NO
LRFD-SHEAR           0
DNEG                 0.0000
COMMENTS             OUTPUT CONTROL:
MTEN                 YES
IBSH                 NO
IINFN                YES
LIVELO               YES
DEFAULTS             YES
LOOPS                YES
INTERMEDIATE         YES
COMMENTS             MATERIAL PROPERTIES:
FCONC                4000.000
CE                   3644147.000
CWGT                 150.000
ZEE                  155.000
EXP_FACTOR           0.750
```

this case controls over 140 pcf vertical & 42 pcf horizontal


```
                                PAGE  2
                          DATE 10/30/2014
                    BRASS-CULVERT(LRFD)  Version 2.2.9a
                          TOPROCK COMPRESSOR STATION

EWGT                 140.000
AWGT                 145.000
FYST                 60000.000
CN                   7.9580
COMMENTS             BOX GEOMETRY:
NBOX                 2
NSPAN                20.0000
NHITE                6.0000
LENG                 32.0000
BWIDTH               24.0000
CBWIDTH              16.0000
TSLAB                20.0000
KFXTS                F
BSLAB                15.0000
KFXBS                F
WALLR                12.0000
KFXW                 F
IWALLR               12.0000
KFXI                 F
COMMENTS             SKEW:
CSKEW                40.0000
LSKEW                130.0000
RSKEW                130.0000
COMMENTS             CONCRETE COVER:
COVS                 2.0000
COVB                 2.0000
COVW                 2.0000
COVIN                2.0000
COMMENTS             DEAD LOADS:
PRESS                140.000
PMIN                 140.000
PWAT                 62.400
EDLU                 153.0000
NFILL                0.0000
NWEAR                0.0000
FILLFA               1.1500
SIFACT               1.1500
COMMENTS             LIVE LOADS:
LVLD                 HL-93-TRUCK
LVLD                 HL-93-TANDEM
LVOMT                NO
```

```
                                PAGE  3
                            DATE 10/30/2014
                   BRASS-CULVERT(LRFD)  Version 2.2.9a
                          TOPROCK COMPRESSOR STATION

LLPATCH              PL
SURCH_USE            YES
NLANES               1
LIMIT_DIST           NO
LRFDDF               YES
COMMENTS             REBAR REVIEW:
DESREV               YES
TCBSZ                7
TCBSP                6.0000
BCBSZ                7
BCBSP                6.0000
TSIFTSZ              7
TSIFTSP              6.0000
TSOFTSZ              7
TSOFTSP              6.0000
BSIFTSZ              7
BSIFTSP              6.0000
BSOFTSZ              7
BSOFTSP              6.0000
EWIFVSZ              5
EWIFVSP              12.0000
EWOFVSZ              7
EWOFVSP              12.0000
IWVSZ                5
IWVSP                12.0000

End of Input File No.  1
==========================================================================================
```



```
                                PAGE  4
                            DATE 10/30/2014
                   BRASS-CULVERT(LRFD)  Version 2.2.9a
                          TOPROCK COMPRESSOR STATION

_____________________________________________________________________________

Note:
    The following list of variables are used in the
       application.  They are shown in US units because
       that is the internal computational mode.

    The first set are the variables defaulted
       from input and the second set are system
       variables.

_____________________________________________________________________________


 Units
 USSI_UNITS:     Input Units                            =      US
 USSI_UNITS_OU:  Output Units                           =      US

_____________________________________________________________________________
 Design Variables
 LRFDDF:  Use LRFD method for bot slab load distrib.    =       T
 CUTYPE:  Precast(PC) or Cast in Place(CIP) Culvert     =     CIP
 IDSN:    Design Method                                 =    LRFD
 FUNCT:   Design (DESIGN) or Design Review (DESREV)     =  DESREV
 IRELEASE:Moment Continuity Released (@ end of walls)   =       F
 DNEG:    Distance to Neg. Moment Computation Point     =    0.00
_____________________________________________________________________________
 Output Control Variables
 MTEN:   Output Moment-Shears                           =       T
 IINFN:  Output Influence Line                          =       T
 IBSH:   Output Bar Schedule                            =       F

_____________________________________________________________________________
 Standard Load Variables
 LVLD:   Live Load Vehicle Name                         = HL-93-TRUCK
 LVLD:   Live Load Vehicle Name                         = HL-93-TANDEM
 LVOMT:  Neglect LL for Fill > 8Ft & Fill > Span        =       F
```

```
                              PAGE  5
                          DATE 10/30/2014
                 BRASS-CULVERT(LRFD)  Version 2.2.9a
                        TOPROCK COMPRESSOR STATION

Uniform Dead Load Variable
EDLU:     Extra Uniform Dead Load (Lbs/Ft)            =   153.0
NWEAR:    Thickness of Wearing Surface (in)           =     0.0

Concentrated Dead Load Variables
EDLC1:   Extra Concentrated Dead Load (Lbs)           =     0.0
EDLX1:   Position of Load from CL of Left Wall (Ft)   =     0.0
EDLC2:   Extra Concentrated Dead Load (Lbs)           =     0.0
EDLX2:   Position of Load from CL of Left Wall (Ft)   =     0.0
EDLC3:   Extra Concentrated Dead Load (Lbs)           =     0.0
EDLX3:   Position of Load from CL of Left Wall (Ft)   =     0.0

Soil and Water Pressure Variables
SURCH:  Depth of Surcharge                            =     2.0
PRESS:  Maximum Soil Equiv. Fluid Pressure(Pcf)       =   140.0
PMIN:   Minimum Soil Equiv. Fluid Pressure(Pcf)       =   140.0
PWAT:   Internal Water Pressure                       =    62.4

Geometry - Box Dimension Variables
NBOX:   Number of Boxes (1 TO 4)                      =       2
NSPAN:  Clear Span (Ft)                               =    20.0
NHITE:  Clear Height (Ft)                             =     6.0
NFILL:  Design Fill Measured from Top of Top Slab(Ft) =     0.0
LENG:   Section length(PC)-Culvert Length(CIP)(Ft)    =    32.0

Geometry - Slab Thickness Variables
TSLAB:  Thickness of top Slab (In)                    =    20.0
BSLAB:  Thickness of Bottom Slab(In)                  =    15.0
WALLR:  Thickness of Exterior Wall (In)               =    12.0

IWALLR: Minimum Value for Interior Wall(In)           =    12.0

IWALLR: Minimum Value for Interior Wall(In)           =    12.0
KFXI:   Code for Interior Wall(F=Fixed,V=Variable)    =       F
```



```
                              PAGE  6
                          DATE 10/30/2014
                 BRASS-CULVERT(LRFD)  Version 2.2.9a
                        TOPROCK COMPRESSOR STATION

Geometry - Skew and Haunch Variables
LSKEW:  Left End Skew Angle(Deg)                      =   130.0
RSKEW:  Right End Skew Angle (Deg)                    =   130.0
CSKEW:  Culvert Skew Angle (Deg)                      =    40.0
TFILT:  Top Haunch (In)                               =     0.0
BFILT:  Bottom Haunch (In)                            =     0.0
KHACH:  Haunches used in Analysis (YES/NO)            =     YES

Geometry - Clear Concrete Cover
COVS:   Exterior Concrete Cover Top Slab (In)         =     2.0
COVB:   Exterior Concrete Cover Bottom Slab (In)      =     2.0
COVW:   Exterior Concrete Cover Walls (In)            =     2.0
COVIN:  Interior Concrete Cover (In)                  =     2.0

Material Properties Variables
EWGT:  Weight of Soil (Pcf)                           =   140.0
FYST:  Yield Strength of Reinf.  Steel (Psi)          = 60000.0
FSTL:  Allowable Stress of Reinf. Steel(Psi)(ASD)     = 36000.0
FCONC: Compressive Strength of Concrete (Psi)         =  4000.0
FSHR:  Shear in Concrete (Psi)(ASD)                   =     0.0
FSTIR: Allowable Stress in Stirrups (Psi)(ASD)        =     0.0
CWGT:  Weight of Concrete (Pcf)                       =   150.0
AWGT:  Weight of Wearing Surface (Pcf)                =   145.0
```

```
                                PAGE  7
                            DATE 10/30/2014
                   BRASS-CULVERT(LRFD)  Version 2.2.9a
                          TOPROCK COMPRESSOR STATION

ZEE:     Crack Width Parameter from AASHTO            =   155.0
CN:      Modular Ratio of Concrete                    =     8.0
CE:      Modulus of Elasticity of Concrete(ksi)       =  3644.1

ZEE:     Crack Width Parameter from AASHTO            =     0.9
CN:      Modular Ratio of Concrete                    =     0.9
CE:      Modulus of Elasticity of Concrete(ksi)       =

Service-I load and resistance factors
EV: Vertical Earth Pressure max-min    1.00 1.00
DC: Components max-min                 1.00 1.00
DW: Wearing Surfaces max-min           1.00 1.00
EH: Horizontal Earth Pressure Passive  1.00
LS: Live load surcharge                1.00
WA: Water load and stream pressure     1.00
LL: Vehicular live load                1.00

Strength-I load and resistance factors
EV: Vertical Earth Pressure max-min    1.30 0.90
DC: Components max-min                 1.25 0.90
DW: Wearing Surfaces max-min           1.50 0.65
EH: Horizontal Earth Pressure Passive  1.35
LS: Live load surcharge                1.75
WA: Water load and stream pressure     1.00
LL: Vehicular live load                1.75

Strength-II load and resistance factors
EV: Vertical Earth Pressure max-min    1.30 0.90
DC: Components max-min                 1.25 0.90
DW: Wearing Surfaces max-min           1.50 0.65
EH: Horizontal Earth Pressure Passive  1.35
LS: Live load surcharge                1.35
WA: Water load and stream pressure     1.00
LL: Vehicular live load                1.35

Fatigue load and resistance factors
EV: Vertical Earth Pressure max-min    0.00 0.00
DC: Components max-min                 0.00 0.00
DW: Wearing Surfaces max-min           0.00 0.00
EH: Horizontal Earth Pressure Passive  0.00
LS: Live load surcharge                0.75
WA: Water load and stream pressure     0.00
LL: Vehicular live load                0.75

B1:  Ratio Depth Compressive Zone AASHTO 5.7.2.2      =     0.85
BB:  Factor Load Factor Po and Pb AASHTO              =     0.80
BETAD:  Dead Load Multiplier for Load Factor          =     1.0000
BETAL:   Live Load Multiplier for Load Factor         =     0.0000
PHIMOM:  Phi Factor for Moment                        =     0.9000
PHISHR:  Phi Factor for Shear                         =     0.8500
GAMMA:   Load Factor Actions Multiplier               =     1.3000
```



```
                                PAGE  8
                            DATE 10/30/2014
                   BRASS-CULVERT(LRFD)  Version 2.2.9a
                          TOPROCK COMPRESSOR STATION

IFATIG:  Check Fatigue                                =       F
IHAUCH:  Code for Considering Haunch in Analysis      =       F
ILES5:   Code for Span Less Than 5 ft                 =       F
ISHR:    Code for Shear Stress Check                  =       F

KBASE:  Bottom Slab Support Code(FULL,FIXED,HINGED)   =     FULL
LDPASS: Bypass Live Load if no vehicle input          =       F
LONGB:  Longitudinal Bar Code                         =       F
MESSGE: Code for Message Printout                     =       T

 JOB DESCRIPTION

 Title        : TOPROCK COMPRESSOR STATION
 Structure ID : BOX
 Agency name  :

 Input units  : US
 Output units : US

 ANALYSIS CONTROL
                                Moment      Bottom Slab  Negative
 Construction   Design/      Continuity  Support      Moment
 Type           Review       Released    Code         Position

 CAST-IN-PLACE  DESREV        NO         FULL          0.00

Consider Haunches in Analysis                    :  YES
Perform Edge Beam reinforcement computations     :  NO
Use epoxy coated bars in top mat of reinforcement:  NO
      in top slab

 Design        Limit State Load and Resistance Factors
 Method        Ductility    Redundant   Operations

 LOAD & R  1.0000       1.0000      1.00
```

PAGE 9
DATE 10/30/2014
BRASS-CULVERT(LRFD) Version 2.2.9a
TOPROCK COMPRESSOR STATION

OUTPUT CONTROLS

Drawing File:	NO
Actions at tenth Points:	YES
Bar Schedule:	NO
Live Load Influence Ordinates:	YES
Live Load Actions Envelope:	YES
Default Output:	YES
Intermediate Design Iteration Computations:	YES
Intermediate Computations	YES

MATERIAL PROPERTIES

Concrete f'c (Psi)	Concrete Ec (Psi)	Crack Width Gamma E (Kip/in)	Steel Fy (Psi)	Steel n
4000.	3644147.	0.75	60000.	7.96

Note:
1. The concrete unit weight used for the Ec computation is 5 pcf less than used for load computations

2. The crack width coefficient is the coefficient in Eq. 5.7.3.4-2 for the crack width parameter Z

Unit Weights

Concrete (Pcf)	Soil Fill (Pcf)	Wearing Surface (Pcf)
150.	140.	145.

Note:
1. The soil structure interaction factor has been entered by the user. The value of 1.15 will be used.

PAGE 10
DATE 10/30/2014
BRASS-CULVERT(LRFD) Version 2.2.9a
TOPROCK COMPRESSOR STATION

BOX GEOMETRY

Culvert Cells	Span Length (Ft)	Clear Height (Ft)	Centerline Length (Ft)
DOUBLE	20.00	6.00	32.00

Bridge Width (Ft)	Clear Bridge Width (Ft)	Number of Traffic Lanes
24.00	16.00	1

Slab and Wall Information

Top Slab (In)	Bottom Slab (In)	Exterior Wall (In)	Interior Wall (In)
20.00 Fixed	15.00 Fixed	12.00 Fixed	12.00 Fixed

LIVE LOADS

Vehicle Designation
HL-93-TRUCK
HL-93-TANDEM

Live Load Control: NO
(Neglect Live Load if fill is greater than 8 ft. and fill is greater than culvert span)

Tire application model: patch load
Live Load Surcharge: 2.0 Ft

DEAD LOADS

Concentrated Loads

Wgt. (Kips)	Dis. (Ft)	Wgt. (Kips)	Dis. (Ft)	Wgt. (Kips)	Dis. (Ft)
0.0	0.0	0.0	0.0	0.0	0.0

Soil Pressure Max (Pcf)	Min (Pcf)	Water Density (Pcf)
****	****	62.4

Uniform Load (plf)	Wearing Surface Thickness (in)	Fill Height (Ft)
153.0	0.00	0.00

```
                              PAGE 11
                           DATE 10/30/2014
                 BRASS-CULVERT(LRFD)  Version 2.2.9a
                        TOPROCK COMPRESSOR STATION

_____________________________________________________________________
  SKEW

  Skew     Skew     Skew
  Left     Right    Center
  (Deg)    (Deg)    (Deg)
  130.0    130.0     40.0

_____________________________________________________________________
  HAUNCHES

  Top Haunch   Bottom Haunch
  Height       Height
  (In)         (In)
   0.0          0.0

_____________________________________________________________________
  CONCRETE COVER to face of bar

  Top    Bottom  Exterior Interior
  Slab   Slab    Wall     Wall
  (In)   (In)    (In)     (In)
   2.00   2.00    2.00     2.00
```



```
                              PAGE 12
                           DATE 10/30/2014
                 BRASS-CULVERT(LRFD)  Version 2.2.9a
                        TOPROCK COMPRESSOR STATION


     Bar sizes and spacings with computed areas of steel

     Areas of steel are in in2/ft

                                  Top slab
    LEFT SIDE                      CENTER                        RIGHT SIDE
    area  1.2000 in2               area  1.2000 in2              area  1.2000 in2
    size  7 spaced at   6.00 in.   size  7 spaced at   6.00 in.  size  7 spaced at   6.00 in.
*************************************************************************

 Exterior wall                                                     Interior wall
 TOP                                                               TOP
 area  1.2000 in2                                                  area  0.3100 in2
 size  7 spaced at   6.00 in.                                      size  5 spaced at  12.00 in.


 INSIDE FACE                                                       EACH FACE
 area  0.3100 in2                                                  area  0.3100 in2
 size  5 spaced at  12.00 in.                                      size  5 spaced at  12.00 in.

 OUTSIDE FACE
 area  0.6000 in2
 size  7 spaced at  12.00


 BOTTOM                                                            BOTTOM
 area  1.2000 in2                                                  area  0.3100 in2
 size  7 spaced at   6.00 in.                                      size  5 spaced at  12.00 in.
*************************************************************************

                             Bottom slab
    LEFT SIDE                      CENTER                        RIGHT SIDE
    area  1.2000 in2               area  1.2000 in2              area  1.2000 in2
    size  7 spaced at   6.00 in.   size  7 spaced at   6.00 in.  size  7 spaced at   6.00 in.

    EXTERIOR WALL Minimum Thickness Based on Cover and Layer Clearance
    AASHTO LRFD Section 5.10.3.1 (minimum thickness)
    Equation 2 = exterior wall cover plus the diameter of two #6 bars and
    two #4 bars plus  the inside wall/slab cover plus 1 in clearance

    Required Thickness is   8.00 Inches
```

PAGE 13
DATE 10/30/2014
BRASS-CULVERT(LRFD) Version 2.2.9a
TOPROCK COMPRESSOR STATION

LRFD Live Load Distribution Factor Computation

Input Values

Depth of Fill	= 0.00	ft.
Span Length	= 20.00	ft.
Truck Gage	= 6.00	ft.
Soil Distribution Factor	= 1.15	
Tire Patch Width	= 20.00	in.
Bridge Width	= 24.00	ft.
Lay Length	= 32.00	ft.

Compute Strip Width by 4.6.2.10.2-1

(
)
E = 96 + 1.44 S ft
E = 96 + 1.44 20.00 ft.
E = 10.40 ft.

Controlling Distribution Factor

Final Strip Width = 10.40 ft.

Final Distribution Factor = 1/Final Strip Width = **0.096** Lanes per ft. of width

Multiple Presence Factor = 1.20

Distribution Factor * Multiple Presence Factor = **0.115**

Notes:

1. Only the one lane loaded case is considered. The one lane loaded multiple presence factor is used. See 12.11.2.1, 3.6.1.3.3, and 4.6.2.10.
2. Lane loads are not applied. See 3.6.1.3.3. This applies to all approximate strip methods.
3. The distribution factor for fills of 2 feet or greater is bounded by the distribution factor computed in 4.6.2.10. See 3.6.1.2.6.

PAGE 14
DATE 10/30/2014
BRASS-CULVERT(LRFD) Version 2.2.9a
TOPROCK COMPRESSOR STATION

```
Number of cells                          =     2
Top Slab thickness                       =    20.0000 In.
Bottom Slab thickness                    =    15.0000 In.
Exterior Wall thickness                  =    12.0000 In.
Interior wall thickness                  =    12.00 In.
            Design Span(c-c walls)       =    21.0000 Ft.
Design Height(c-c slabs)                 =     7.4583 Ft.
Fill Height(top of slab)                 =     0.0000 Ft.
Wearing surface thickness                =     0.0000 In.

    Loads based on 1 foot unit width
Soil Structure Interaction Factor        =     1.1500
Earth Weight for fill computations       =     0.1610 Kcf

Weight of Fill without wearing surface   =     0.0000 Klf
Weight of Wearing Surface                =     0.0000 Klf
Weight of Top Slab                       =     0.2500 Klf
Weight of Extra Uniform Dead Load        =     0.1530 Klf
Uniform Dead Load on Top Slab            =     0.4030 Klf

Weight of Walls divided by culvert width =     0.0628 Klf
Uniform Dead Load on Bottom Slab         =     0.4658 Klf


Soil pressure at center of top slab      =     0.1167 Klf
Soil pressure at center of bottom slab   =     1.1608 Klf

Soil pressure due to live load surcharge =     0.4503 Klf

Impact Factor on Top Slab & Walls        =     0.3300
Impact Factor on Bottom Slab             =      0.0000

Axle Load Distribution Factor on:
Top Slab & Walls                         =     0.0000
on Bottom Slab                           =     0.0000
```

Note:

1. The weight of the walls is computed by taking the interior wall thickness plus twice the exterior wall thickness and multiplying by the clear height of the culvert and the weight of concrete. That result is divided by the span length times the number of cells plus the wall thicknesses.

2. The soil pressure computations use the fill height and the culvert height for appropriate values for lateral earth pressures. Wearing surface, fill height, and slab thickness are used in vertical dead load computations.

3. The distribution width and associated distribution factor for the top slab is computed according to AASHTO LRFD 4.6.2.10 for fill depth less than 2 ft. and AASHTO LRFD 3.6.1.2.6 for fill depths over 2 ft. Also, see 3.6.1.3.3.

```
                              PAGE 15
                          DATE 10/30/2014
                 BRASS-CULVERT(LRFD)  Version 2.2.9a
                        TOPROCK COMPRESSOR STATION


For a HL-93-TRUCK  Vehicle
Description AASHTO LRFD HL-93 Design Truck (US)
The Number of axles =    3


 Axle Weights      Spacing
       (kips)        (ft)

        8.00      14.000
       32.00      14.000
       32.00       0.000

      ------      ------
Totals 72.00      28.000
```



```
                              PAGE 16
                          DATE 10/30/2014
                 BRASS-CULVERT(LRFD)  Version 2.2.9a
                        TOPROCK COMPRESSOR STATION


For a HL-93-TRUCK  Vehicle
Description AASHTO LRFD HL-93 Design Truck (US)

The number of simulated axles based on fill =    3

The number of simulated axles is calculated based
on the longitudinal distribution length of each axle
divided by the simulated axle spacing of 1 foot
and the simulated axle weights are calculated by
dividing the vehicle axle weights by the number of
simulated axles per vehicle axle.


  Truck facing backwards      Truck facing forward
        Axle wts.   Spacing       Axle wts.   Spacing
        (kips)        (ft)        (kips)        (ft)
         8.00        0.000        32.00        0.000
        32.00       14.000        32.00       14.000
        32.00       14.000         8.00       14.000

      -------     -------      -------     -------
Totals  72.00       28.000        72.00       28.000


Note: Impact or distribution is not included in the above table.
```

PAGE 17
DATE 10/30/2014
BRASS-CULVERT(LRFD) Version 2.2.9a
TOPROCK COMPRESSOR STATION

Current Live Load: HL-93-TRUCK

Unfactored MOMENTS (per unit design width)
due to Dead and Live Loads including Distribution and Impact

M-PT	Dead Load Kft	Soil Press (Max) Kft	Soil Press (Min) Kft	Surch Hgt. Kft	Water Press (Max) Kft	LIVE LOADS Pos Kft	LIVE LOADS Neg Kft
EXTERIOR WALL BOTTOM							
1- 0	-8.29	-1.53	-1.53	-1.05	0.35	0.00	-5.21
1- 1	-7.66	0.32	0.32	0.00	-0.22	0.00	-4.49
1- 2	-7.04	1.58	1.58	0.80	-0.60	0.00	-4.20
1- 3	-6.41	2.31	2.31	1.35	-0.81	0.00	-4.21
1- 4	-5.79	2.57	2.57	1.65	-0.88	0.00	-4.23
1- 5	-5.16	2.42	2.42	1.70	-0.82	0.00	-4.25
1- 6	-4.54	1.91	1.91	1.50	-0.66	0.26	-4.32
1- 7	-3.91	1.11	1.11	1.05	-0.42	0.70	-4.45
1- 8	-3.28	0.06	0.06	0.35	-0.11	1.32	-4.58
1- 9	-2.66	-1.16	-1.16	-0.61	0.23	2.09	-4.86
1-10	-2.03	-2.51	-2.51	-1.81	0.60	2.85	-5.26
EXTERIOR WALL TOP							
TOP SLAB LEFT SIDE							
2- 0	-2.03	-2.51	-2.51	-1.81	0.60	2.85	-5.26
2- 1	4.07	-2.13	-2.13	-1.54	0.51	6.80	-0.55
2- 2	8.38	-1.75	-1.75	-1.27	0.42	12.83	0.00
2- 3	10.93	-1.38	-1.38	-1.00	0.33	16.35	-0.73
2- 4	11.69	-1.00	-1.00	-0.73	0.24	17.57	-1.65
2- 5	10.68	-0.62	-0.62	-0.45	0.15	17.38	-2.58
2- 6	7.89	-0.24	-0.24	-0.18	0.06	15.81	-3.66
2- 7	3.33	0.14	0.14	0.09	-0.04	12.77	-4.75
2- 8	-3.02	0.52	0.52	0.36	-0.13	7.85	-5.83
2- 9	-11.14	0.89	0.89	0.63	-0.22	0.79	-10.61
2-10	-21.04	1.27	1.27	0.90	-0.31	0.00	-18.52
TOP SLAB RIGHT SIDE							
INTERIOR WALL BOTTOM							
3- 0	0.15	0.15	0.15	0.02	-0.05	1.17	-1.02
3- 1	0.11	0.12	0.12	0.02	-0.04	0.61	-0.49
3- 2	0.08	0.09	0.09	0.01	-0.03	0.15	-0.10
3- 3	0.05	0.05	0.05	0.01	-0.02	0.65	-0.60
3- 4	0.02	0.02	0.02	0.00	-0.01	1.20	-1.18
3- 5	-0.01	-0.01	-0.01	0.00	0.00	1.75	-1.76
3- 6	-0.04	-0.04	-0.04	-0.01	0.01	2.30	-2.35
3- 7	-0.07	-0.07	-0.07	-0.01	0.02	2.85	-2.93
3- 8	-0.10	-0.10	-0.10	-0.02	0.04	3.40	-3.51
3- 9	-0.13	-0.13	-0.13	-0.02	0.05	3.95	-4.10
3-10	-0.16	-0.17	-0.17	-0.03	0.06	4.50	-4.68
INTERIOR WALL TOP							

PAGE 18
DATE 10/30/2014
BRASS-CULVERT(LRFD) Version 2.2.9a
TOPROCK COMPRESSOR STATION

BOTTOM SLAB LEFT SIDE							
4- 0	-8.29	-1.53	-1.53	-1.05	0.35	0.00	-5.21
4- 1	-0.37	-1.30	-1.30	-0.89	0.30	0.70	-0.80
4- 2	5.49	-1.08	-1.08	-0.74	0.25	3.59	0.00
4- 3	9.30	-0.85	-0.85	-0.58	0.20	5.73	0.00
4- 4	11.05	-0.62	-0.62	-0.42	0.14	6.70	0.00
4- 5	10.75	-0.40	-0.40	-0.27	0.09	6.52	0.00
4- 6	8.40	-0.17	-0.17	-0.11	0.04	5.18	0.00
4- 7	3.99	0.06	0.06	0.05	-0.01	2.68	0.00
4- 8	-2.47	0.28	0.28	0.21	-0.06	0.00	-1.82
4- 9	-10.99	0.51	0.51	0.36	-0.11	0.00	-6.63
4-10	-21.56	0.74	0.74	0.52	-0.17	0.00	-12.61
BOTTOM SLAB RIGHT SIDE							

PAGE 19
DATE 10/30/2014
BRASS-CULVERT(LRFD) Version 2.2.9a
TOPROCK COMPRESSOR STATION

Current Live Load: HL-93-TRUCK

Unfactored SHEARS (per unit design width)
due to Dead and Live Loads including Distribution and Impact

M-PT	Dead Load K	Soil Press (Max) K	Soil Press (Min) K	Surch Hgt. K	Water Press (Max) K	LIVE LOADS Pos K	LIVE LOADS Neg K
EXTERIOR WALL BOTTOM							
1- 0	0.84	2.90	2.90	1.58	-0.90	1.02	-0.54
1- 1	0.84	2.07	2.07	1.24	-0.63	1.02	-0.54
1- 2	0.84	1.32	1.32	0.91	-0.39	1.02	-0.54
1- 3	0.84	0.65	0.65	0.57	-0.18	1.02	-0.54
1- 4	0.84	0.06	0.06	0.23	0.00	1.02	-0.54
1- 5	0.84	-0.46	-0.46	-0.10	0.15	1.02	-0.54
1- 6	0.84	-0.89	-0.89	-0.44	0.28	1.02	-0.54
1- 7	0.84	-1.25	-1.25	-0.77	0.37	1.02	-0.54
1- 8	0.84	-1.53	-1.53	-1.11	0.44	1.02	-0.54
1- 9	0.84	-1.74	-1.74	-1.45	0.49	1.02	-0.54
1-10	0.84	-1.86	-1.86	-1.78	0.50	1.02	-0.54
EXTERIOR WALL TOP							
TOP SLAB LEFT SIDE							
2- 0	3.33	0.18	0.18	0.13	-0.04	5.94	-0.52
2- 1	2.48	0.18	0.18	0.13	-0.04	4.54	-0.52
2- 2	1.63	0.18	0.18	0.13	-0.04	3.64	-1.02
2- 3	0.79	0.18	0.18	0.13	-0.04	2.95	-1.56
2- 4	-0.06	0.18	0.18	0.13	-0.04	2.37	-2.32
2- 5	-0.90	0.18	0.18	0.13	-0.04	1.80	-3.05
2- 6	-1.75	0.18	0.18	0.13	-0.04	1.26	-3.70
2- 7	-2.60	0.18	0.18	0.13	-0.04	0.41	-4.30
2- 8	-3.44	0.18	0.18	0.13	-0.04	0.00	-5.06
2- 9	-4.29	0.18	0.18	0.13	-0.04	0.00	-5.96
2-10	-5.14	0.18	0.18	0.13	-0.04	0.00	-6.39
TOP SLAB RIGHT SIDE							
INTERIOR WALL BOTTOM							
3- 0	-0.04	-0.04	-0.04	-0.01	0.01	0.74	-0.78
3- 1	-0.04	-0.04	-0.04	-0.01	0.01	0.74	-0.78
3- 2	-0.04	-0.04	-0.04	-0.01	0.01	0.74	-0.78
3- 3	-0.04	-0.04	-0.04	-0.01	0.01	0.74	-0.78
3- 4	-0.04	-0.04	-0.04	-0.01	0.01	0.74	-0.78
3- 5	-0.04	-0.04	-0.04	-0.01	0.01	0.74	-0.78
3- 6	-0.04	-0.04	-0.04	-0.01	0.01	0.74	-0.78
3- 7	-0.04	-0.04	-0.04	-0.01	0.01	0.74	-0.78
3- 8	-0.04	-0.04	-0.04	-0.01	0.01	0.74	-0.78
3- 9	-0.04	-0.04	-0.04	-0.01	0.01	0.74	-0.78
3-10	-0.04	-0.04	-0.04	-0.01	0.01	0.74	-0.78
INTERIOR WALL TOP							

PAGE 20
DATE 10/30/2014
BRASS-CULVERT(LRFD) Version 2.2.9a
TOPROCK COMPRESSOR STATION

BOTTOM SLAB LEFT SIDE							
4- 0	4.26	0.11	0.11	0.07	-0.02	2.43	0.00
4- 1	3.28	0.11	0.11	0.07	-0.02	1.88	0.00
4- 2	2.30	0.11	0.11	0.07	-0.02	1.32	0.00
4- 3	1.32	0.11	0.11	0.07	-0.02	0.77	0.00
4- 4	0.35	0.11	0.11	0.07	-0.02	0.22	0.00
4- 5	-0.63	0.11	0.11	0.07	-0.02	0.00	-0.37
4- 6	-1.61	0.11	0.11	0.07	-0.02	0.00	-0.93
4- 7	-2.59	0.11	0.11	0.07	-0.02	0.00	-1.48
4- 8	-3.57	0.11	0.11	0.07	-0.02	0.00	-2.03
4- 9	-4.54	0.11	0.11	0.07	-0.02	0.00	-2.58
4-10	-5.52	0.11	0.11	0.07	-0.02	0.00	-3.14
BOTTOM SLAB RIGHT SIDE							

PAGE 21
DATE 10/30/2014
BRASS-CULVERT(LRFD) Version 2.2.9a
TOPROCK COMPRESSOR STATION

Current Live Load: HL-93-TRUCK

Unfactored AXIAL FORCES (per unit design width)
due to Dead and Live Loads including Distribution and Impact

M-PT	Dead Load K	Soil Press (Max) K	Soil Press (Min) K	Surch Hgt. K	Water Press (Max) K	LIVE LOADS Pos K	LIVE LOADS Neg K
EXTERIOR WALL BOTTOM							
1- 0	-3.33	-0.18	-0.18	-0.13	0.04	0.52	-5.70
1- 1	-3.33	-0.18	-0.18	-0.13	0.04	0.52	-5.70
1- 2	-3.33	-0.18	-0.18	-0.13	0.04	0.52	-5.70
1- 3	-3.33	-0.18	-0.18	-0.13	0.04	0.52	-5.70
1- 4	-3.33	-0.18	-0.18	-0.13	0.04	0.52	-5.70
1- 5	-3.33	-0.18	-0.18	-0.13	0.04	0.52	-5.70
1- 6	-3.33	-0.18	-0.18	-0.13	0.04	0.52	-5.70
1- 7	-3.33	-0.18	-0.18	-0.13	0.04	0.52	-5.70
1- 8	-3.33	-0.18	-0.18	-0.13	0.04	0.52	-5.70
1- 9	-3.33	-0.18	-0.18	-0.13	0.04	0.52	-5.70
1-10	-3.33	-0.18	-0.18	-0.13	0.04	0.52	-5.70
EXTERIOR WALL TOP							
TOP SLAB LEFT SIDE							
2- 0	0.84	-1.86	-1.86	-1.78	0.50	1.02	-0.54
2- 1	0.84	-1.86	-1.86	-1.78	0.50	1.02	-0.54
2- 2	0.84	-1.86	-1.86	-1.78	0.50	1.02	-0.54
2- 3	0.84	-1.86	-1.86	-1.78	0.50	1.02	-0.54
2- 4	0.84	-1.86	-1.86	-1.78	0.50	1.02	-0.54
2- 5	0.84	-1.86	-1.86	-1.78	0.50	1.02	-0.54
2- 6	0.84	-1.86	-1.86	-1.78	0.50	1.02	-0.54
2- 7	0.84	-1.86	-1.86	-1.78	0.50	1.02	-0.54
2- 8	0.84	-1.86	-1.86	-1.78	0.50	1.02	-0.54
2- 9	0.84	-1.86	-1.86	-1.78	0.50	1.02	-0.54
2-10	0.84	-1.86	-1.86	-1.78	0.50	1.02	-0.54
TOP SLAB RIGHT SIDE							
INTERIOR WALL BOTTOM							
3- 0	-10.29	0.34	0.34	0.26	-0.08	0.00	-8.27
3- 1	-10.29	0.34	0.34	0.26	-0.08	0.00	-8.27
3- 2	-10.29	0.34	0.34	0.26	-0.08	0.00	-8.27
3- 3	-10.29	0.34	0.34	0.26	-0.08	0.00	-8.27
3- 4	-10.29	0.34	0.34	0.26	-0.08	0.00	-8.27
3- 5	-10.29	0.34	0.34	0.26	-0.08	0.00	-8.27
3- 6	-10.29	0.34	0.34	0.26	-0.08	0.00	-8.27
3- 7	-10.29	0.34	0.34	0.26	-0.08	0.00	-8.27
3- 8	-10.29	0.34	0.34	0.26	-0.08	0.00	-8.27
3- 9	-10.29	0.34	0.34	0.26	-0.08	0.00	-8.27
3-10	-10.29	0.34	0.34	0.26	-0.08	0.00	-8.27
INTERIOR WALL TOP							

PAGE 22
DATE 10/30/2014
BRASS-CULVERT(LRFD) Version 2.2.9a
TOPROCK COMPRESSOR STATION

BOTTOM SLAB LEFT SIDE							
4- 0	-0.84	-2.90	-2.90	-1.58	0.90	0.54	-1.02
4- 1	-0.84	-2.90	-2.90	-1.58	0.90	0.54	-1.02
4- 2	-0.84	-2.90	-2.90	-1.58	0.90	0.54	-1.02
4- 3	-0.84	-2.90	-2.90	-1.58	0.90	0.54	-1.02
4- 4	-0.84	-2.90	-2.90	-1.58	0.90	0.54	-1.02
4- 5	-0.84	-2.90	-2.90	-1.58	0.90	0.54	-1.02
4- 6	-0.84	-2.90	-2.90	-1.58	0.90	0.54	-1.02
4- 7	-0.84	-2.90	-2.90	-1.58	0.90	0.54	-1.02
4- 8	-0.84	-2.90	-2.90	-1.58	0.90	0.54	-1.02
4- 9	-0.84	-2.90	-2.90	-1.58	0.90	0.54	-1.02
4-10	-0.84	-2.90	-2.90	-1.58	0.90	0.54	-1.02
BOTTOM SLAB RIGHT SIDE							

Factors for Ductility 1.00
Redundancy 1.00
Operations 1.00

PAGE 23
DATE 10/30/2014
BRASS-CULVERT(LRFD) Version 2.2.9a
TOPROCK COMPRESSOR STATION

Fatigue Checks

$f_s <= f_f = 24 - 0.33f_{min}$ (5.5.3.2-1)

where:

f_s = actual stress range in the reinforcement

f_f = maximum allowable stress range

Member	Location	f_{min} (kip / in.^{2})	f_f (kip / in.^{2})	f_s (kip / in.^{2})	Result
EXTERIOR WALL	Top	34.971	24011.54	4481.88	Pass
TOP SLAB	Left	100.086	24033.03	2213.07	Pass
TOP SLAB	Middle +	146.323	24048.29	9499.83	Pass
INTERIOR WALL	Bottom	-675.759	23777.00	896.18	Pass
INTERIOR WALL	Middle	-462.227	23847.46	4591.58	Pass
INTERIOR WALL	Top	-462.227	23847.46	12396.54	Pass
BOTTOM SLAB	Left	96.067	24031.70	2648.28	Pass

PAGE 24
DATE 10/30/2014
BRASS-CULVERT(LRFD) Version 2.2.9a
TOPROCK COMPRESSOR STATION

LRFD Crack Control Computation

Current Vehicle: AASHTO LRFD HL-93 Design Truck (US)

Location	γ_e	h (in.)	d_c (in.)	β_s	Max Spacing ()	Current Spacing (in.)	Allowable Stress ()	Actual Stress (kip / in.^{2})
Top slab, outside corner	$f_r > f_c$, therefore no check necessary.							
Top slab, inside face	0.75000000	20.00000000	2.00000000	1.15873015	22.98419189	6.00000000	45.30821991	16.79065323
Top slab, outside face	0.75000000	20.00000000	2.00000000	1.15873015	18.34247398	6.00000000	45.30821991	20.27896309
Bottom slab, outside corner	$f_r > f_c$, therefore no check necessary.							
Bottom slab, inside face	0.75000000	15.00000000	2.00000000	1.21978021	26.30202103	6.00000000	43.04054642	14.20385170
Bottom slab, outside face	0.75000000	15.00000000	2.00000000	1.21978021	13.62474632	6.00000000	43.04054642	24.42051697
Ext. wall, outside face	$f_r > f_c$, therefore no check necessary.							
Ext. wall, inside face	$f_r > f_c$, therefore no check necessary.							
Interior wall	$f_r > f_c$, therefore no check necessary.							

```
                                PAGE 25
                             DATE 10/30/2014
                   BRASS-CULVERT(LRFD)  Version 2.2.9a
                          TOPROCK COMPRESSOR STATION


     Bar sizes and spacings with computed areas of steel

     Areas of steel are in in2/ft

                                Top slab
    LEFT SIDE                    CENTER                      RIGHT SIDE
    area  1.2000 in2             area  1.2000 in2            area  1.2000 in2
    size  7 spaced at   6.00 in. size  7 spaced at   6.00 in. size  7 spaced at   6.00 in.
*************************************************************************

 Exterior wall                                                Interior wall
 TOP                                                          TOP
 area  1.2000 in2                                             area  0.3100 in2
 size  7 spaced at   6.00 in.                                 size  5 spaced at  12.00 in.


 INSIDE FACE                                                  EACH FACE
 area  0.3100 in2                                             area  0.3100 in2
 size  5 spaced at  12.00 in.                                 size  5 spaced at  12.00 in.

 OUTSIDE FACE
 area  0.6000 in2
 size  7 spaced at  12.00


 BOTTOM                                                       BOTTOM
 area  1.2000 in2                                             area  0.3100 in2
 size  7 spaced at   6.00 in.                                 size  5 spaced at  12.00 in.
*************************************************************************

                           Bottom slab
    LEFT SIDE                    CENTER                      RIGHT SIDE
    area  1.2000 in2             area  1.2000 in2            area  1.2000 in2
    size  7 spaced at   6.00 in. size  7 spaced at   6.00 in. size  7 spaced at   6.00 in.
```



```
                                PAGE 26
                             DATE 10/30/2014
                   BRASS-CULVERT(LRFD)  Version 2.2.9a
                          TOPROCK COMPRESSOR STATION

_____________________________________________________________________________

  Serviceability, Fatigue, and Other Checks
_____________________________________________________________________________

    Based on crack control check
    AASHTO 5.7.3.4 LRFD

    Slenderness check on walls passed
    Eccentricity check on walls passed
_____________________________________________________________________________

  Reinforcing Bar Stresses Sizes and Spacing
_____________________________________________________________________________


Note: Bar stresses are based on bending and axial stress only
      Stresses are in ksi
      Area of steel in square inches per ft
      Spacing and H and V legs are in inches

 Bar Mark                Description
 A1            Top Corner Outside face Max Neg Moment
 A100          Top Slab Inside face  Max Pos Moment
 A300          Top Slab Outside face Max Neg Moment Interior support
 A2            Bottom Corner Outside face Max Neg Moment
 A200          Bottom Slab Inside face  Max Pos Moment
 A400          Bottom Slab Outside face Max Neg Moment Interior support
 B2            Exterior Wall Outside face Max Neg Moment
 B1            Exterior Wall Inside face  Max Pos Moment
 B3            Interior Wall Both faces


 Bar Type    Fs Act.  Fs All.         Area steel       Size  Spacing   H    V
                                    Input    Provided    US
             (Ksi)    (Ksi)         (In2)     (In2)     Bars   (In)   (In) (In)


  A1          5.23     0.00      1.2000     1.2000       7     6.0    53   49
  A2         10.74    20.28      1.2000     1.2000       7     6.0    41   44
  A100       16.79    45.31      1.2000     1.2000       7     6.0
  A300       20.28    45.31      1.2000     1.2000       7     6.0
  A200       14.20    43.04      1.2000     1.2000       7     6.0
  A400       24.42    43.04      1.2000     1.2000       7     6.0
  B1          0.00    24.42      0.3100     0.3100       5    12.0
  B2         17.62    24.42      0.6000     0.6000       7    12.0
  B3          0.00    24.42      0.3100     0.3100       5    12.0
```

PAGE 27
DATE 10/30/2014
BRASS-CULVERT(LRFD) Version 2.2.9a
TOPROCK COMPRESSOR STATION

Notes:

1. Area of steel is the maximum required for all limit states. The strength computations are shown in the results at critical sections table.

2. Design thickness shown in the following table is based on the appropriate cover minus half the diameter of the bar in the above table or one-half the diameter of a #6 bar. The actual half bar diameter is used once the steel has been selected and the #6 bar is used in design iterations.

3. For a Design review run the actual bar stresses shown can be the stress at either side of a member corner or the stress at the middle of the slab for a multiple cell group. The required As is actual in a Design review.

4. If the user wishes to ignore crack control the allowable steel stress is set at 0.95 Fy. This limit will likely not control the design, but it if should, this will control yielding under service loads.

PAGE 28
DATE 10/30/2014
BRASS-CULVERT(LRFD) Version 2.2.9a
TOPROCK COMPRESSOR STATION

Output at Critical Sections (per unit design width)

Member No. = 1 EXTERIOR WALL
Thickness = 12.00 (in)
Clear cover at end = 2.00 (in)
Clear cover at middle = 2.00 (in)
Bar diameter (bot) = 0.88 (in)
Bar diameter (mid+) = 0.62 (in)
Bar diameter (mid-) = 0.88 (in)
Bar diameter (top) = 0.88 (in)

	Moment Kft	Coin. Axial Force Kips	Shear Force Kips	Shear Cap Kips	Resistance Po Cap Kips	Mu Cap Kft	Mbal Cap Kft	Pbal Cap Kips	Steel Area In2	Mom. Cap Kft	Des. Thk in	Flexure Ratings Inv	Oper
BOT	-18.4	14.3	6.3	17.0	385.9	46.9	64.1	99.4	1.2000	47.5	9.56	3.8	4.9
MID	1.6	14.3	2.6	38.6	356.0	13.2	51.8	144.2	0.3100	13.5	9.69	n/a	n/a
MID-	-13.2	14.3	1.1	18.3	365.8	24.6	55.6	128.2	0.6000	25.0	9.56	6.6	8.5
TOP	-14.3	14.6	4.2	19.1	385.9	46.9	64.1	99.4	1.2000	47.5	9.56	3.9	5.1

Member No. = 2 TOP SLAB
Thickness = 20.00 (in)
Clear cover at end = 2.00 (in)
Clear cover at middle = 2.00 (in)
Bar diameter (lt) = 0.88 (in)
Bar diameter (mid) = 0.88 (in)
Bar diameter (rt) = 0.88 (in)

LT	-15.0	5.9	11.7	35.0	616.3	90.1	170.5	230.8	1.2000	90.3	17.56	8.4	10.9
MID	44.7	6.1	2.8	29.1	616.3	90.1	170.5	230.8	1.2000	90.3	17.56	2.5	3.3
RT	-51.7	1.1	15.8	24.8	616.3	90.1	170.5	230.8	1.2000	90.1	17.56	2.5	3.2

Member No. = 3 INTERIOR WALL
Thickness = 12.00 (in)
Clear cover at end = 2.00 (in)
Clear cover at middle = 2.00 (in)
Bar diameter (bot) = 0.62 (in)
Bar diameter (mid+) = 0.62 (in)
Bar diameter (mid-) = 0.62 (in)
Bar diameter (top) = 0.62 (in)

BOT	-0.8	23.5	1.2	41.2	356.0	13.2	51.8	144.2	0.3100	14.0	9.69	14.2	18.4
MID	3.1	23.5	1.2	41.2	356.0	13.2	51.8	144.2	0.3100	14.0	9.69	4.6	5.9
MID-	-3.1	26.4	1.2	41.8	356.0	13.2	51.8	144.2	0.3100	14.2	9.69	2.3	3.0
TOP	-7.4	26.4	1.5	41.0	356.0	13.2	51.8	144.2	0.3100	14.2	9.69	2.3	3.0

Member No. = 4 BOTTOM SLAB
Thickness = 15.00 (in)
Clear cover at end = 2.00 (in)
Clear cover at middle = 2.00 (in)
Bar diameter (lt) = 0.88 (in)
Bar diameter (mid) = 0.88 (in)
Bar diameter (rt) = 0.88 (in)

LT	-19.3	9.9	8.2	23.3	472.3	63.1	98.9	148.7	1.2000	63.4	12.56	5.9	7.7
MID	25.1	9.7	0.3	23.4	472.3	63.1	98.9	148.7	1.2000	63.4	12.56	4.4	5.7
RT	-42.9	4.6	10.7	17.1	472.3	63.1	98.9	148.7	1.2000	63.2	12.56	2.1	2.8

Warnings:

1. For exterior corners, BRASS-CULVERT does not perform a check on both the exterior wall and top or bottom slab. BRASS-CULVERT only checks the location that it has determined requires a greater area of steel. Because of this, BRASS-CULVERT may check one location for a particular culvert (e.g. top of the wall) and a different location (e.g. left end of top slab) for the same culvert with a different depth of fill.

2. If the flexural resistance is zero and rebar has been entered, it could be due to the axial load being higher than the tensile capacity of the rebar provide. For example, the axial load is greater than the area of steel times the yield strength of the bars.

PAGE 29
DATE 10/30/2014
BRASS-CULVERT(LRFD) Version 2.2.9a
TOPROCK COMPRESSOR STATION

Notes:

1. Flexure rating value of n/a indicates no live load effect on the member

2. SS value adjacent to steel area indicates a simply supported culvert and a steel area is not required

3. AASHTO LRFD Sec. 5.7.4 with 94-99 Interims
   Po -- Axial capacity at zero eccentricity (no moment)
   Mu -- Flexural Capacity without an axial load
   Pbal -- Axial load at balanced strain
   Mbal -- Moment at balanced state of strain

4. Coin. is the coincident axial force

5. The plane of computation for shear is a "d" distance from the face of the supporting member

6. The plane of computation for moment if haunches are used is based on AASHTO 8.8.2

7. The plane of computation for moment if haunches are not used is based on the user input

8. An asterisk next to the Design Moment indicates the Moment is greater than the All Mom. Value

9. An asterisk next to the Shear Value indicates the Shear is greater than the Allowable Shear

10. Rating factors computations consider the effect of axial force. The Allowable Moment value is used with the maximum soil pressure.

11. The load combinations and envelope of critical action combinations are shown in the C:\Projects\Bat Cave Wash\BRASSCULVERT\BOXCULVERT2.ooo file.

12. For fills less than 2.0 feet, Article 5.14.4.1 applies, and shear is assumed to adequate because the section has been designed for moment.

PAGE 30
DATE 10/30/2014
BRASS-CULVERT(LRFD) Version 2.2.9a
TOPROCK COMPRESSOR STATION

Factored Actions for Load and Resistance Factor Design at Tenth Points (per unit design width)

M-Pt	+Moment (Kft)	-Moment (Kft)	+A.F. (Kips)	-A.F. (Kips)	+Shear (Kips)	-Shear (Kips)
EXTERIOR WALL BOTTOM						
1- 0	-8.489	-23.615	-2.210	-14.631	9.514	1.523
1- 1	-6.468	-17.374	-2.561	-14.254	7.810	1.044
1- 2	-2.799	-15.319	-2.561	-14.254	6.211	0.607
1- 3	-0.284	-14.122	-2.561	-14.254	4.718	0.213
1- 4	1.156	-13.206	-2.561	-14.254	3.329	-0.140
1- 5	1.600	-12.543	-2.561	-14.254	2.579	-1.052
1- 6	1.572	-12.173	-2.561	-14.254	2.311	-2.296
1- 7	1.042	-12.098	-2.561	-14.254	2.085	-3.423
1- 8	0.055	-12.176	-2.561	-14.254	1.901	-4.433
1- 9	0.452	-14.623	-2.210	-14.631	1.760	-5.327
1-10	1.505	-18.674	-2.210	-14.631	1.660	-6.104
EXTERIOR WALL TOP						
TOP SLAB LEFT SIDE						
2- 0	1.505	-18.674	1.367	-5.810	15.021	2.208
2- 1	15.580	-3.197	1.660	-6.103	11.507	1.446
2- 2	31.786	2.698	1.660	-6.103	8.890	-0.201
2- 3	41.360	4.757	1.660	-6.103	6.616	-1.910
2- 4	44.704	4.869	1.660	-6.103	4.561	-4.024
2- 5	43.357	3.382	1.660	-6.103	2.804	-6.352
2- 6	37.366	0.015	1.660	-6.103	1.103	-8.542
2- 7	26.838	-5.224	-2.795	-1.369	-1.159	-10.660
2- 8	12.350	-13.640	-3.089	-1.075	-2.630	-13.038
2- 9	-6.330	-31.911	-3.089	-1.075	-3.392	-15.680
2-10	-15.639	-57.876	-3.089	-1.075	-4.154	-17.487
TOP SLAB RIGHT SIDE						
INTERIOR WALL BOTTOM						
3- 0	2.478	-1.568	-11.956	-23.505	1.229	-1.496
3- 1	1.400	-0.693	-11.956	-23.505	1.229	-1.496
3- 2	0.504	-0.059	-11.956	-23.505	1.229	-1.496
3- 3	1.299	-0.967	-11.956	-23.505	1.229	-1.496
3- 4	2.167	-2.029	-11.956	-23.505	1.229	-1.496
3- 5	3.051	-3.109	-9.035	-26.374	1.229	-1.496
3- 6	3.968	-4.225	-9.035	-26.374	1.229	-1.496
3- 7	4.885	-5.341	-9.035	-26.374	1.229	-1.496
3- 8	5.801	-6.457	-9.035	-26.374	1.229	-1.496
3- 9	6.718	-7.573	-9.035	-26.374	1.229	-1.496
3-10	7.635	-8.689	-9.035	-26.374	1.229	-1.496
INTERIOR WALL TOP						

```
                                PAGE 31
                            DATE 10/30/2014
                   BRASS-CULVERT(LRFD)  Version 2.2.9a
                          TOPROCK COMPRESSOR STATION


BOTTOM SLAB LEFT SIDE
 4- 0     -8.489    -23.615     -1.523     -9.949      9.850      3.906
 4- 1      0.007     -5.382     -1.523     -9.949      7.660      3.025
 4- 2     12.428      2.034     -1.816     -9.656      5.471      2.145
 4- 3     21.072      6.077     -1.816     -9.656      3.281      1.265
 4- 4     25.124      8.271     -1.816     -9.656      1.092      0.384
 4- 5     24.579      8.616     -1.816     -9.656     -0.292     -1.373
 4- 6     19.443      7.113     -1.816     -9.656     -1.172     -3.562
 4- 7      9.839      3.630     -6.779     -4.258     -2.053     -5.752
 4- 8     -1.482     -6.089     -6.485     -4.552     -2.933     -7.941
 4- 9     -8.566    -25.001     -6.485     -4.552     -3.813    -10.131
 4-10    -17.498    -48.512     -6.485     -4.552     -4.694    -12.320
BOTTOM SLAB RIGHT SIDE
```



```
                                PAGE 32
                            DATE 10/30/2014
                   BRASS-CULVERT(LRFD)  Version 2.2.9a
                          TOPROCK COMPRESSOR STATION


 The Influence values have been written to "input file name"_INF.out


_____________________________________________________________________

Output complete for a HL-93-TRUCK  vehicle
_____________________________________________________________________
```

PAGE 49
DATE 10/30/2014
BRASS-CULVERT(LRFD) Version 2.2.9a
TOPROCK COMPRESSOR STATION

LRFD Live Load Distribution Factor Computation

Input Values

Depth of Fill	= 0.00	ft.
Span Length	= 20.00	ft.
Truck Gage	= 6.00	ft.
Soil Distribution Factor	= 1.15	
Tire Patch Width	= 20.00	in.
Bridge Width	= 24.00	ft.
Lay Length	= 32.00	ft.

Compute Strip Width by 4.6.2.10.2-1

(
)
E = 96 + 1.44 S ft
E = 96 + 1.44 20.00 ft.
E = 10.40 ft.

Controlling Distribution Factor

Final Strip Width = 10.40 ft.

Final Distribution Factor = 1/Final Strip Width = **0.096** Lanes per ft. of width

Multiple Presence Factor = 1.20

Distribution Factor * Multiple Presence Factor = **0.115**

Notes:

1. Only the one lane loaded case is considered. The one lane loaded multiple presence factor is used. See 12.11.2.1, 3.6.1.3.3, and 4.6.2.10.
2. Lane loads are not applied. See 3.6.1.3.3. This applies to all approximate strip methods.
3. The distribution factor for fills of 2 feet or greater is bounded by the distribution factor computed in 4.6.2.10. See 3.6.1.2.6.

PAGE 50
DATE 10/30/2014
BRASS-CULVERT(LRFD) Version 2.2.9a
TOPROCK COMPRESSOR STATION

For a HL-93-TANDEM Vehicle
Description AASHTO LRFD HL-93 Design Tandem (US)
The Number of axles = 2

Axle Weights (kips)	Spacing (ft)
25.00	4.000
25.00	0.000
---	---
Totals 50.00	4.000

PAGE 51
DATE 10/30/2014
BRASS-CULVERT(LRFD) Version 2.2.9a
TOPROCK COMPRESSOR STATION

For a HL-93-TANDEM Vehicle
Description AASHTO LRFD HL-93 Design Tandem (US)

The number of simulated axles based on fill = 2

The number of simulated axles is calculated based on the longitudinal distribution length of each axle divided by the simulated axle spacing of 1 foot and the simulated axle weights are calculated by dividing the vehicle axle weights by the number of simulated axles per vehicle axle.

	Truck facing backwards		Truck facing forward	
	Axle wts. (kips)	Spacing (ft)	Axle wts. (kips)	Spacing (ft)
	25.00	0.000	25.00	0.000
	25.00	4.000	25.00	4.000
	---	---	---	---
Totals	50.00	4.000	50.00	4.000

Note: Impact or distribution is not included in the above table.

PAGE 52
DATE 10/30/2014
BRASS-CULVERT(LRFD) Version 2.2.9a
TOPROCK COMPRESSOR STATION

Current Live Load: HL-93-TANDEM

Unfactored MOMENTS (per unit design width)
due to Dead and Live Loads including Distribution and Impact

M-PT	Dead Load Kft	Soil Press (Max) Kft	Soil Press (Min) Kft	Surch Hgt. Kft	Water Press (Max) Kft	LIVE LOADS Pos Kft	LIVE LOADS Neg Kft
EXTERIOR WALL BOTTOM							
1- 0	-8.29	-1.53	-1.53	-1.05	0.35	0.00	-3.80
1- 1	-7.66	0.32	0.32	0.00	-0.22	0.00	-3.17
1- 2	-7.04	1.58	1.58	0.80	-0.60	0.00	-3.18
1- 3	-6.41	2.31	2.31	1.35	-0.81	0.00	-3.74
1- 4	-5.79	2.57	2.57	1.65	-0.88	0.00	-4.32
1- 5	-5.16	2.42	2.42	1.70	-0.82	0.00	-4.90
1- 6	-4.54	1.91	1.91	1.50	-0.66	0.34	-5.47
1- 7	-3.91	1.11	1.11	1.05	-0.42	1.03	-6.05
1- 8	-3.28	0.06	0.06	0.35	-0.11	1.72	-6.62
1- 9	-2.66	-1.16	-1.16	-0.61	0.23	2.41	-7.20
1-10	-2.03	-2.51	-2.51	-1.81	0.60	3.10	-7.77
EXTERIOR WALL TOP							
TOP SLAB LEFT SIDE							
2- 0	-2.03	-2.51	-2.51	-1.81	0.60	3.10	-7.77
2- 1	4.07	-2.13	-2.13	-1.54	0.51	7.03	-0.65
2- 2	8.38	-1.75	-1.75	-1.27	0.42	14.53	0.00
2- 3	10.93	-1.38	-1.38	-1.00	0.33	19.46	-1.06
2- 4	11.69	-1.00	-1.00	-0.73	0.24	21.60	-2.44
2- 5	10.68	-0.62	-0.62	-0.45	0.15	21.29	-3.83
2- 6	7.89	-0.24	-0.24	-0.18	0.06	19.47	-5.22
2- 7	3.33	0.14	0.14	0.09	-0.04	15.10	-6.61
2- 8	-3.02	0.52	0.52	0.36	-0.13	8.67	-7.99
2- 9	-11.14	0.89	0.89	0.63	-0.22	1.10	-9.38
2-10	-21.04	1.27	1.27	0.90	-0.31	0.00	-17.20
TOP SLAB RIGHT SIDE							
INTERIOR WALL BOTTOM							
3- 0	0.15	0.15	0.15	0.02	-0.05	1.60	-1.51
3- 1	0.11	0.12	0.12	0.02	-0.04	0.80	-0.72
3- 2	0.08	0.09	0.09	0.01	-0.03	0.16	-0.14
3- 3	0.05	0.05	0.05	0.01	-0.02	0.86	-0.84
3- 4	0.02	0.02	0.02	0.00	-0.01	1.65	-1.63
3- 5	-0.01	-0.01	-0.01	0.00	0.00	2.43	-2.43
3- 6	-0.04	-0.04	-0.04	-0.01	0.01	3.22	-3.24
3- 7	-0.07	-0.07	-0.07	-0.01	0.02	4.01	-4.04
3- 8	-0.10	-0.10	-0.10	-0.02	0.04	4.79	-4.85
3- 9	-0.13	-0.13	-0.13	-0.02	0.05	5.58	-5.65
3-10	-0.16	-0.17	-0.17	-0.03	0.06	6.37	-6.46
INTERIOR WALL TOP							

PAGE 53
DATE 10/30/2014
BRASS-CULVERT(LRFD) Version 2.2.9a
TOPROCK COMPRESSOR STATION

BOTTOM SLAB LEFT SIDE

4- 0	-8.29	-1.53	-1.53	-1.05	0.35	0.00	-3.80
4- 1	-0.37	-1.30	-1.30	-0.89	0.30	1.01	-0.72
4- 2	5.49	-1.08	-1.08	-0.74	0.25	3.22	0.00
4- 3	9.30	-0.85	-0.85	-0.58	0.20	4.64	0.00
4- 4	11.05	-0.62	-0.62	-0.42	0.14	5.24	0.00
4- 5	10.75	-0.40	-0.40	-0.27	0.09	5.06	0.00
4- 6	8.40	-0.17	-0.17	-0.11	0.04	4.08	0.00
4- 7	3.99	0.06	0.06	0.05	-0.01	2.31	0.00
4- 8	-2.47	0.28	0.28	0.21	-0.06	0.00	-1.76
4- 9	-10.99	0.51	0.51	0.36	-0.11	0.00	-5.14
4-10	-21.56	0.74	0.74	0.52	-0.17	0.00	-9.32

BOTTOM SLAB RIGHT SIDE

PAGE 54
DATE 10/30/2014
BRASS-CULVERT(LRFD) Version 2.2.9a
TOPROCK COMPRESSOR STATION

Current Live Load: HL-93-TANDEM

Unfactored SHEARS (per unit design width)
due to Dead and Live Loads including Distribution and Impact

M-PT	Dead Load K	Soil Press (Max) K	Soil Press (Min) K	Surch Hgt. K	Water Press (Max) K	LIVE LOADS Pos K	LIVE LOADS Neg K
EXTERIOR WALL BOTTOM							
1- 0	0.84	2.90	2.90	1.58	-0.90	0.93	-0.77
1- 1	0.84	2.07	2.07	1.24	-0.63	0.93	-0.77
1- 2	0.84	1.32	1.32	0.91	-0.39	0.93	-0.77
1- 3	0.84	0.65	0.65	0.57	-0.18	0.93	-0.77
1- 4	0.84	0.06	0.06	0.23	0.00	0.93	-0.77
1- 5	0.84	-0.46	-0.46	-0.10	0.15	0.93	-0.77
1- 6	0.84	-0.89	-0.89	-0.44	0.28	0.93	-0.77
1- 7	0.84	-1.25	-1.25	-0.77	0.37	0.93	-0.77
1- 8	0.84	-1.53	-1.53	-1.11	0.44	0.93	-0.77
1- 9	0.84	-1.74	-1.74	-1.45	0.49	0.93	-0.77
1-10	0.84	-1.86	-1.86	-1.78	0.50	0.93	-0.77
EXTERIOR WALL TOP							
TOP SLAB LEFT SIDE							
2- 0	3.33	0.18	0.18	0.13	-0.04	6.68	-0.66
2- 1	2.48	0.18	0.18	0.13	-0.04	5.57	-0.66
2- 2	1.63	0.18	0.18	0.13	-0.04	4.69	-0.88
2- 3	0.79	0.18	0.18	0.13	-0.04	3.80	-1.67
2- 4	-0.06	0.18	0.18	0.13	-0.04	2.92	-2.45
2- 5	-0.90	0.18	0.18	0.13	-0.04	2.08	-3.34
2- 6	-1.75	0.18	0.18	0.13	-0.04	1.32	-4.23
2- 7	-2.60	0.18	0.18	0.13	-0.04	0.66	-5.09
2- 8	-3.44	0.18	0.18	0.13	-0.04	0.23	-5.89
2- 9	-4.29	0.18	0.18	0.13	-0.04	0.00	-6.61
2-10	-5.14	0.18	0.18	0.13	-0.04	0.00	-6.92
TOP SLAB RIGHT SIDE							
INTERIOR WALL BOTTOM							
3- 0	-0.04	-0.04	-0.04	-0.01	0.01	1.06	-1.08
3- 1	-0.04	-0.04	-0.04	-0.01	0.01	1.06	-1.08
3- 2	-0.04	-0.04	-0.04	-0.01	0.01	1.06	-1.08
3- 3	-0.04	-0.04	-0.04	-0.01	0.01	1.06	-1.08
3- 4	-0.04	-0.04	-0.04	-0.01	0.01	1.06	-1.08
3- 5	-0.04	-0.04	-0.04	-0.01	0.01	1.06	-1.08
3- 6	-0.04	-0.04	-0.04	-0.01	0.01	1.06	-1.08
3- 7	-0.04	-0.04	-0.04	-0.01	0.01	1.06	-1.08
3- 8	-0.04	-0.04	-0.04	-0.01	0.01	1.06	-1.08
3- 9	-0.04	-0.04	-0.04	-0.01	0.01	1.06	-1.08
3-10	-0.04	-0.04	-0.04	-0.01	0.01	1.06	-1.08
INTERIOR WALL TOP							

PAGE 55
DATE 10/30/2014
BRASS-CULVERT(LRFD) Version 2.2.9a
TOPROCK COMPRESSOR STATION

BOTTOM SLAB LEFT SIDE

4- 0	4.26	0.11	0.11	0.07	-0.02	1.70	0.00
4- 1	3.28	0.11	0.11	0.07	-0.02	1.32	0.00
4- 2	2.30	0.11	0.11	0.07	-0.02	0.93	0.00
4- 3	1.32	0.11	0.11	0.07	-0.02	0.55	0.00
4- 4	0.35	0.11	0.11	0.07	-0.02	0.17	0.00
4- 5	-0.63	0.11	0.11	0.07	-0.02	0.00	-0.29
4- 6	-1.61	0.11	0.11	0.07	-0.02	0.00	-0.68
4- 7	-2.59	0.11	0.11	0.07	-0.02	0.00	-1.06
4- 8	-3.57	0.11	0.11	0.07	-0.02	0.00	-1.44
4- 9	-4.54	0.11	0.11	0.07	-0.02	0.00	-1.83
4-10	-5.52	0.11	0.11	0.07	-0.02	0.00	-2.21

BOTTOM SLAB RIGHT SIDE

PAGE 56
DATE 10/30/2014
BRASS-CULVERT(LRFD) Version 2.2.9a
TOPROCK COMPRESSOR STATION

Current Live Load: HL-93-TANDEM

Unfactored AXIAL FORCES (per unit design width)
due to Dead and Live Loads including Distribution and Impact

M-PT	Dead Load K	Soil Press (Max) K	Soil Press (Min) K	Surch Hgt. K	Water Press (Max) K	LIVE Pos K	LOADS Neg K
EXTERIOR WALL BOTTOM							
1- 0	-3.33	-0.18	-0.18	-0.13	0.04	0.66	-6.68
1- 1	-3.33	-0.18	-0.18	-0.13	0.04	0.66	-6.68
1- 2	-3.33	-0.18	-0.18	-0.13	0.04	0.66	-6.68
1- 3	-3.33	-0.18	-0.18	-0.13	0.04	0.66	-6.68
1- 4	-3.33	-0.18	-0.18	-0.13	0.04	0.66	-6.68
1- 5	-3.33	-0.18	-0.18	-0.13	0.04	0.66	-6.68
1- 6	-3.33	-0.18	-0.18	-0.13	0.04	0.66	-6.68
1- 7	-3.33	-0.18	-0.18	-0.13	0.04	0.66	-6.68
1- 8	-3.33	-0.18	-0.18	-0.13	0.04	0.66	-6.68
1- 9	-3.33	-0.18	-0.18	-0.13	0.04	0.66	-6.68
1-10	-3.33	-0.18	-0.18	-0.13	0.04	0.66	-6.68
EXTERIOR WALL TOP							
TOP SLAB LEFT SIDE							
2- 0	0.84	-1.86	-1.86	-1.78	0.50	0.92	-0.77
2- 1	0.84	-1.86	-1.86	-1.78	0.50	0.92	-0.77
2- 2	0.84	-1.86	-1.86	-1.78	0.50	0.92	-0.77
2- 3	0.84	-1.86	-1.86	-1.78	0.50	0.92	-0.77
2- 4	0.84	-1.86	-1.86	-1.78	0.50	0.92	-0.77
2- 5	0.84	-1.86	-1.86	-1.78	0.50	0.92	-0.77
2- 6	0.84	-1.86	-1.86	-1.78	0.50	0.92	-0.77
2- 7	0.84	-1.86	-1.86	-1.78	0.50	0.92	-0.77
2- 8	0.84	-1.86	-1.86	-1.78	0.50	0.92	-0.77
2- 9	0.84	-1.86	-1.86	-1.78	0.50	0.92	-0.77
2-10	0.84	-1.86	-1.86	-1.78	0.50	0.92	-0.77
TOP SLAB RIGHT SIDE							
INTERIOR WALL BOTTOM							
3- 0	-10.29	0.34	0.34	0.26	-0.08	0.00	-7.67
3- 1	-10.29	0.34	0.34	0.26	-0.08	0.00	-7.67
3- 2	-10.29	0.34	0.34	0.26	-0.08	0.00	-7.67
3- 3	-10.29	0.34	0.34	0.26	-0.08	0.00	-7.67
3- 4	-10.29	0.34	0.34	0.26	-0.08	0.00	-7.67
3- 5	-10.29	0.34	0.34	0.26	-0.08	0.00	-7.67
3- 6	-10.29	0.34	0.34	0.26	-0.08	0.00	-7.67
3- 7	-10.29	0.34	0.34	0.26	-0.08	0.00	-7.67
3- 8	-10.29	0.34	0.34	0.26	-0.08	0.00	-7.67
3- 9	-10.29	0.34	0.34	0.26	-0.08	0.00	-7.67
3-10	-10.29	0.34	0.34	0.26	-0.08	0.00	-7.67
INTERIOR WALL TOP							

```
                                PAGE 57
                             DATE 10/30/2014
                   BRASS-CULVERT(LRFD)  Version 2.2.9a
                          TOPROCK COMPRESSOR STATION


BOTTOM SLAB LEFT SIDE
    4- 0   -0.84   -2.90   -2.90   -1.58    0.90    0.77   -0.92
    4- 1   -0.84   -2.90   -2.90   -1.58    0.90    0.77   -0.92
    4- 2   -0.84   -2.90   -2.90   -1.58    0.90    0.77   -0.92
    4- 3   -0.84   -2.90   -2.90   -1.58    0.90    0.77   -0.92
    4- 4   -0.84   -2.90   -2.90   -1.58    0.90    0.77   -0.92
    4- 5   -0.84   -2.90   -2.90   -1.58    0.90    0.77   -0.92
    4- 6   -0.84   -2.90   -2.90   -1.58    0.90    0.77   -0.92
    4- 7   -0.84   -2.90   -2.90   -1.58    0.90    0.77   -0.92
    4- 8   -0.84   -2.90   -2.90   -1.58    0.90    0.77   -0.92
    4- 9   -0.84   -2.90   -2.90   -1.58    0.90    0.77   -0.92
    4-10   -0.84   -2.90   -2.90   -1.58    0.90    0.77   -0.92
BOTTOM SLAB RIGHT SIDE


Factors for Ductility   1.00
            Redundancy  1.00
            Operations  1.00
```



```
                                PAGE 58
                             DATE 10/30/2014
                   BRASS-CULVERT(LRFD)  Version 2.2.9a
                          TOPROCK COMPRESSOR STATION
```

Fatigue Checks

$f_s <= f_f = 24 - 0.33f_{min}$ (5.5.3.2-1)

where:

f_s = actual stress range in the reinforcement

f_f = maximum allowable stress range

Member	Location	f_{min} (kip / in.^{2})	f_f (kip / in.^{2})	f_s (kip / in.^{2})	Result
EXTERIOR WALL	Top	48.305	24015.94	6715.62	Pass
TOP SLAB	Left	138.247	24045.62	3413.55	Pass
TOP SLAB	Middle +	217.651	24071.82	11689.96	Pass
TOP SLAB	Middle -	217.651	24071.82	8484.65	Pass
INTERIOR WALL	Bottom	-1005.171	23668.29	2166.68	Pass
INTERIOR WALL	Middle	-638.461	23789.31	8441.59	Pass
INTERIOR WALL	Top	-638.461	23789.31	17104.07	Pass
BOTTOM SLAB	Left	132.694	24043.79	2171.00	Pass

```
                    PAGE 59
                 DATE 10/30/2014
BRASS-CULVERT(LRFD)  Version 2.2.9a
        TOPROCK COMPRESSOR STATION
```

LRFD Crack Control Computation

Current Vehicle: AASHTO LRFD HL-93 Design Tandem (US)

Location	γ_e	h (in.)	d_c (in.)	β_s	Max Spacing ()	Current Spacing (in.)	Allowable Stress ()	Actual Stress (kip / in.^{2})
Top slab, outside corner	$f_r > f_c$, therefore no check necessary.							
Top slab, inside face	0.75000000	20.00000000	2.00000000	1.15873015	19.64127922	6.00000000	45.30821991	19.16487694
Top slab, outside face	0.75000000	20.00000000	2.00000000	1.15873015	19.21834755	6.00000000	45.30821991	19.51397324
Bottom slab, outside corner	$f_r > f_c$, therefore no check necessary.							
Bottom slab, inside face	0.75000000	15.00000000	2.00000000	1.21978021	29.09309387	6.00000000	43.04054642	13.00589848
Bottom slab, outside face	0.75000000	15.00000000	2.00000000	1.21978021	15.50510311	6.00000000	43.04054642	22.06629753
Ext. wall, outside face	$f_r > f_c$, therefore no check necessary.							
Ext. wall, inside face	$f_r > f_c$, therefore no check necessary.							
Interior wall	$f_r > f_c$, therefore no check necessary.							


```
                    PAGE 60
                 DATE 10/30/2014
BRASS-CULVERT(LRFD)  Version 2.2.9a
        TOPROCK COMPRESSOR STATION


     Bar sizes and spacings with computed areas of steel

     Areas of steel are in in2/ft

                                Top slab
    LEFT SIDE                    CENTER                        RIGHT SIDE
    area  1.2000 in2             area  1.2000 in2              area  1.2000 in2
    size  7 spaced at   6.00 in. size  7 spaced at   6.00 in. size  7 spaced at   6.00 in.
*************************************************************************

 Exterior wall                                                 Interior wall
TOP                                                            TOP
area  1.2000 in2                                               area  0.3100 in2
size  7 spaced at   6.00 in.                                   size  5 spaced at  12.00 in.


INSIDE FACE                                                    EACH FACE
area  0.3100 in2                                               area  0.3100 in2
size  5 spaced at  12.00 in.                                   size  5 spaced at  12.00 in.

OUTSIDE FACE
area  0.6000 in2
size  7 spaced at  12.00


BOTTOM                                                         BOTTOM
area  1.2000 in2                                               area  0.3100 in2
size  7 spaced at   6.00 in.                                   size  5 spaced at  12.00 in.
*************************************************************************

                          Bottom slab
    LEFT SIDE                    CENTER                        RIGHT SIDE
    area  1.2000 in2             area  1.2000 in2              area  1.2000 in2
    size  7 spaced at   6.00 in. size  7 spaced at   6.00 in. size  7 spaced at   6.00 in.
```

PAGE 61
DATE 10/30/2014
BRASS-CULVERT(LRFD) Version 2.2.9a
TOPROCK COMPRESSOR STATION

Serviceability, Fatigue, and Other Checks

Based on crack control check
AASHTO 5.7.3.4 LRFD

Slenderness check on walls passed
Eccentricity check on walls passed

Reinforcing Bar Stresses Sizes and Spacing

Note: Bar stresses are based on bending and axial stress only
Stresses are in ksi
Area of steel in square inches per ft
Spacing and H and V legs are in inches

Bar Mark	Description
A1	Top Corner Outside face Max Neg Moment
A100	Top Slab Inside face Max Pos Moment
A300	Top Slab Outside face Max Neg Moment Interior support
A2	Bottom Corner Outside face Max Neg Moment
A200	Bottom Slab Inside face Max Pos Moment
A400	Bottom Slab Outside face Max Neg Moment Interior support
B2	Exterior Wall Outside face Max Neg Moment
B1	Exterior Wall Inside face Max Pos Moment
B3	Interior Wall Both faces

Bar Type	Fs Act. (Ksi)	Fs All. (Ksi)	Area steel Input (In2)	Area steel Provided (In2)	Size US Bars	Spacing (In)	H (In)	V (In)
A1	6.38	24.42	1.2000	1.2000	7	6.0	53	49
A2	9.84	19.51	1.2000	1.2000	7	6.0	41	44
A100	19.16	45.31	1.2000	1.2000	7	6.0		
A300	19.51	45.31	1.2000	1.2000	7	6.0		
A200	13.01	43.04	1.2000	1.2000	7	6.0		
A400	22.07	43.04	1.2000	1.2000	7	6.0		
B1	0.00	22.07	0.3100	0.3100	5	12.0		
B2	17.90	22.07	0.6000	0.6000	7	12.0		
B3	0.00	22.07	0.3100	0.3100	5	12.0		

PAGE 62
DATE 10/30/2014
BRASS-CULVERT(LRFD) Version 2.2.9a
TOPROCK COMPRESSOR STATION

PAGE 63
DATE 10/30/2014
BRASS-CULVERT(LRFD) Version 2.2.9a
TOPROCK COMPRESSOR STATION

Output at Critical Sections (per unit design width)

Member No. = 1 EXTERIOR WALL

Thickness = 12.00 (in)
Clear cover at end = 2.00 (in)
Clear cover at middle = 2.00 (in)
Bar diameter (bot) = 0.88 (in)
Bar diameter (mid+) = 0.62 (in)
Bar diameter (mid-) = 0.88 (in)
Bar diameter (top) = 0.88 (in)

	Moment Kft	Coin. Axial Force Kips	Shear Force Kips	Shear Cap Kips	Resistance Po Cap Kips	Mu Cap Kft	Mbal Cap Kft	Pbal Cap Kips	Steel Area In2	Mom. Cap Kft	Des. Thk in	Flexure Ratings Inv	Flexure Ratings Oper
BOT	-16.0	16.0	6.1	18.1	385.9	46.9	64.1	99.4	1.2000	47.6	9.56	5.0	6.5
MID	1.6	16.0	2.4	39.9	356.0	13.2	51.8	144.2	0.3100	13.6	9.69	n/a	n/a
MID-	-13.7	16.0	1.5	18.4	365.8	24.6	55.6	128.2	0.6000	25.1	9.56	5.3	6.8
TOP	-18.4	16.3	4.6	17.7	385.9	46.9	64.1	99.4	1.2000	47.6	9.56	3.0	3.8

Member No. = 2 TOP SLAB

Thickness = 20.00 (in)
Clear cover at end = 2.00 (in)
Clear cover at middle = 2.00 (in)
Bar diameter (lt) = 0.88 (in)
Bar diameter (mid) = 0.88 (in)
Bar diameter (rt) = 0.88 (in)

LT	-18.4	6.3	13.5	33.3	616.3	90.1	170.5	230.8	1.2000	90.3	17.56	6.3	8.2
MID	51.8	6.5	3.3	27.4	616.3	90.1	170.5	230.8	1.2000	90.3	17.56	2.1	2.7
RT	-49.4	1.5	16.9	25.0	616.3	90.1	170.5	230.8	1.2000	90.1	17.56	2.7	3.5

Member No. = 3 INTERIOR WALL

Thickness = 12.00 (in)
Clear cover at end = 2.00 (in)
Clear cover at middle = 2.00 (in)
Bar diameter (bot) = 0.62 (in)
Bar diameter (mid+) = 0.62 (in)
Bar diameter (mid-) = 0.62 (in)
Bar diameter (top) = 0.62 (in)

BOT	-1.3	22.5	1.8	41.0	356.0	13.2	51.8	144.2	0.3100	14.0	9.69	9.5	12.3
MID	4.2	22.5	1.8	41.0	356.0	13.2	51.8	144.2	0.3100	14.0	9.69	3.3	4.2
MID-	-4.3	25.3	1.8	41.6	356.0	13.2	51.8	144.2	0.3100	14.1	9.69	1.7	2.2
TOP	-10.1	25.3	2.0	28.6	356.0	13.2	51.8	144.2	0.3100	14.1	9.69	1.7	2.2

Member No. = 4 BOTTOM SLAB

Thickness = 15.00 (in)
Clear cover at end = 2.00 (in)
Clear cover at middle = 2.00 (in)
Bar diameter (lt) = 0.88 (in)
Bar diameter (mid) = 0.88 (in)
Bar diameter (rt) = 0.88 (in)

LT	-17.4	9.8	7.1	24.2	472.3	63.1	98.9	148.7	1.2000	63.4	12.56	7.5	9.7
MID	22.6	9.5	0.3	24.3	472.3	63.1	98.9	148.7	1.2000	63.4	12.56	5.7	7.4
RT	-37.9	4.4	9.3	18.1	472.3	63.1	98.9	148.7	1.2000	63.2	12.56	2.9	3.8

Warnings:

1. For exterior corners, BRASS-CULVERT does not perform a check on both the exterior wall and top or bottom slab. BRASS-CULVERT only checks the location that it has determined requires a greater area of steel. Because of this, BRASS-CULVERT may check one location for a particular culvert (e.g. top of the wall) and a different location (e.g. left end of top slab) for the same culvert with a different depth of fill.

2. If the flexural resistance is zero and rebar has been entered, it could be due to the axial load being higher than the tensile capacity of the rebar provide. For example, the axial load is greater than the area of steel times the yield strength of the bars.

PAGE 64
DATE 10/30/2014
BRASS-CULVERT(LRFD) Version 2.2.9a
TOPROCK COMPRESSOR STATION

Factored Actions for Load and Resistance Factor Design at Tenth Points (per unit design width)

M-Pt	+Moment (Kft)	-Moment (Kft)	+A.F. (Kips)	-A.F. (Kips)	+Shear (Kips)	-Shear (Kips)
EXTERIOR WALL BOTTOM						
1- 0	-8.489	-21.150	-1.958	-16.343	9.344	1.118
1- 1	-6.468	-15.055	-2.309	-15.965	7.640	0.639
1- 2	-2.799	-13.534	-2.309	-15.965	6.041	0.202
1- 3	-0.284	-13.300	-2.309	-15.965	4.547	-0.192
1- 4	1.156	-13.359	-2.309	-15.965	3.158	-0.545
1- 5	1.600	-13.664	-2.309	-15.965	2.408	-1.457
1- 6	1.728	-14.185	-2.309	-15.965	2.140	-2.701
1- 7	1.622	-14.891	-2.309	-15.965	1.914	-3.828
1- 8	0.754	-15.749	-2.309	-15.965	1.731	-4.838
1- 9	1.024	-18.722	-1.958	-16.343	1.589	-5.732
1-10	1.950	-23.075	-1.958	-16.343	1.490	-6.508
EXTERIOR WALL TOP						
TOP SLAB LEFT SIDE						
2- 0	1.950	-23.075	1.194	-6.209	16.316	1.956
2- 1	15.983	-3.375	1.488	-6.502	13.315	1.195
2- 2	34.749	2.698	1.488	-6.502	10.724	0.045
2- 3	46.801	4.178	1.488	-6.502	8.101	-2.097
2- 4	51.757	3.481	1.488	-6.502	5.521	-4.236
2- 5	50.198	1.184	1.488	-6.502	3.293	-6.850
2- 6	43.780	-2.712	1.488	-6.502	1.199	-9.469
2- 7	30.927	-8.479	-2.967	-1.768	-0.709	-12.038
2- 8	13.788	-17.424	-3.261	-1.474	-2.232	-14.502
2- 9	-5.793	-29.753	-3.261	-1.474	-3.392	-16.806
2-10	-15.639	-55.567	-3.261	-1.474	-4.154	-18.410
TOP SLAB RIGHT SIDE						
INTERIOR WALL BOTTOM						
3- 0	3.222	-2.421	-11.956	-22.466	1.786	-2.015
3- 1	1.741	-1.097	-11.956	-22.466	1.786	-2.015
3- 2	0.517	-0.127	-11.956	-22.466	1.786	-2.015
3- 3	1.667	-1.396	-11.956	-22.466	1.786	-2.015
3- 4	2.945	-2.828	-11.956	-22.466	1.786	-2.015
3- 5	4.245	-4.285	-9.035	-25.336	1.786	-2.015
3- 6	5.577	-5.787	-9.035	-25.336	1.786	-2.015
3- 7	6.909	-7.290	-9.035	-25.336	1.786	-2.015
3- 8	8.241	-8.792	-9.035	-25.336	1.786	-2.015
3- 9	9.574	-10.295	-9.035	-25.336	1.786	-2.015
3-10	10.906	-11.797	-9.035	-25.336	1.786	-2.015
INTERIOR WALL TOP						

```
                                PAGE 65
                             DATE 10/30/2014
                   BRASS-CULVERT(LRFD)  Version 2.2.9a
                          TOPROCK COMPRESSOR STATION


BOTTOM SLAB LEFT SIDE
 4- 0     -8.489    -21.150     -1.124     -9.777      8.578      3.906
 4- 1      0.548     -5.249     -1.124     -9.777      6.684      3.025
 4- 2     11.779      2.034     -1.418     -9.483      4.790      2.145
 4- 3     19.163      6.077     -1.418     -9.483      2.896      1.265
 4- 4     22.575      8.271     -1.418     -9.483      1.002      0.384
 4- 5     22.027      8.616     -1.418     -9.483     -0.292     -1.227
 4- 6     17.522      7.113     -1.418     -9.483     -1.172     -3.121
 4- 7      9.196      3.630     -6.380     -4.086     -2.053     -5.015
 4- 8     -1.482     -5.986     -6.086     -4.379     -2.933     -6.910
 4- 9     -8.566    -22.382     -6.086     -4.379     -3.813     -8.804
 4-10    -17.498    -42.755     -6.086     -4.379     -4.694    -10.698
BOTTOM SLAB RIGHT SIDE
```



```
                                PAGE 66
                             DATE 10/30/2014
                   BRASS-CULVERT(LRFD)  Version 2.2.9a
                          TOPROCK COMPRESSOR STATION


 The Influence values have been written to "input file name"_INF.out


_____________________________________________________________________

 Output complete for a HL-93-TANDEM vehicle
_____________________________________________________________________
```

```
                              PAGE 83
                          DATE 10/30/2014
                  BRASS-CULVERT(LRFD)  Version 2.2.9a
                         TOPROCK COMPRESSOR STATION


                            ** LOAD RATING SUMMARY **


                              *INVENTORY RATING*


LOAD NO.  1: AASHTO LRFD HL-93 Design Truck (US)
   TOTAL VEHICLE WT.   :      36.000 (TONS)
   CONTROLLING MEMBER  :       4
   CONTROLLING POINT   :       3
   RATING FACTOR       :       2.147
   LOAD RATING         :      77.292 (TONS)

LOAD NO.  2: AASHTO LRFD HL-93 Design Tandem (US)
   TOTAL VEHICLE WT.   :      25.000 (TONS)
   CONTROLLING MEMBER  :       3
   CONTROLLING POINT   :       3
   RATING FACTOR       :       1.667
   LOAD RATING         :      41.679 (TONS)


                              *OPERATING RATING*


LOAD NO.  1: AASHTO LRFD HL-93 Design Truck (US)
   TOTAL VEHICLE WT.   :      36.000 (TONS)
   CONTROLLING MEMBER  :       4
   CONTROLLING POINT   :       3
   RATING FACTOR       :       2.783
   LOAD RATING         :     100.193 (TONS)

LOAD NO.  2: AASHTO LRFD HL-93 Design Tandem (US)
   TOTAL VEHICLE WT.   :      25.000 (TONS)
   CONTROLLING MEMBER  :       3
   CONTROLLING POINT   :       3
   RATING FACTOR       :       2.161
   LOAD RATING         :      54.028 (TONS)
```

controlling Inventory Load Rating

controlling Operating Load Rating

BRASS-CULVERT

```
                    BRASS-CULVERT(LRFD)  Version 2.2.9a


  DATE : 10/30/2014        TIME :  8:29: 2                    PAGE  1

 Input Filename                   : C:\Projects\Bat Cave Wash\BRASSCULVERT\BOXCULVERT2_Min Horz.DAT
 Output Filename                  : C:\Projects\Bat Cave Wash\BRASSCULVERT\BOXCULVERT2_Min Horz.xml
 Output Filename for Live Loads   : C:\Projects\Bat Cave Wash\BRASSCULVERT\BOXCULVERT2_Min Horz_LL.OUT

 The following filenames may be used in this run
 Live Load Influence Values       File name : C:\Projects\Bat Cave Wash\BRASSCULVERT\BOXCULVERT2_Min Horz_INF.OUT
 Drawing                          File name : C:\Projects\Bat Cave Wash\BRASSCULVERT\BOXCULVERT2_Min Horz.drw
 Live Load Influence Ordinates    File name : C:\Projects\Bat Cave Wash\BRASSCULVERT\BOXCULVERT2_Min Horz.ill
 Live Load Actions (w/o DF or IM) File name : C:\Projects\Bat Cave Wash\BRASSCULVERT\BOXCULVERT2_Min Horz.oll
 Intermediate Computations        File name : C:\Projects\Bat Cave Wash\BRASSCULVERT\BOXCULVERT2_Min Horz.ooo
 Data Modelling                   File name : C:\Projects\Bat Cave Wash\BRASSCULVERT\BOXCULVERT2_Min Horz.tmp

COMMENTS              THIS FILE WAS CREATED BY THE BRASS-CULVERT GUI.
COMMENTS              DO NOT EDIT THIS FILE!
COMMENTS             JOB DESCRIPTION:
TITLE                TOPROCK COMPRESSOR STATION
STRUCTID             BOX CULVERT
AGENCY               PG&E
COMMENTS             140 PCF VERTICAL& 42 PCF HORIZONTAL (NO WATER OR SURCHARGE)

COMMENTS             MANUALLY INPUT LANE LOAD SINCE BRASS WON'T COMBINE TRUCK AND LANE...

COMMENTS             DF = 10+5*SQRT(20'*25.67') = 12.25' (AASHTO EQN. 4.6.2.3-1)

COMMENTS             (1.75 FACTOR)(640 PLF)(1.2 MPF)(1.33 IM)/(12.25' DF) = 146 PLF/FT

COMMENTS             ADD (1.25 FACTOR)(75 PLF)(2 RAILS)/(25'-8") = 7 PLF/FT

COMMENTS             TOTAL UNIFORM LOAD = 153 PLF/FT

COMMENTS
UNITSIN              US
UNITSOUT             US
COMMENTS             ANALYSIS CONTROL:
TYPE                 CIP
FUNCT                DESREV
IRELEASE             NO
IDSN                 LRFD
KBASE                FULL
KHACH                YES
EPOXY                NO
EDGE-STRIP           NO
LRFD-SHEAR           0
DNEG                 0.0000
COMMENTS             OUTPUT CONTROL:
MTEN                 YES
IBSH                 NO
IINFN                YES
LIVELO               YES
DEFAULTS             YES
LOOPS                YES
INTERMEDIATE         YES
COMMENTS             MATERIAL PROPERTIES:
FCONC                4000.000
CE                   3644147.000
CWGT                 150.000
ZEE                  155.000
EXP_FACTOR           0.750
```

this case does not control over 140 pcf vertical & 140 pcf horizontal


```
                                PAGE  2
                          DATE 10/30/2014
                   BRASS-CULVERT(LRFD)  Version 2.2.9a
                         TOPROCK COMPRESSOR STATION

EWGT                 140.000
AWGT                 145.000
FYST                 60000.000
CN                   7.9580
COMMENTS             BOX GEOMETRY:
NBOX                 2
NSPAN                20.0000
NHITE                6.0000
LENG                 32.0000
BWIDTH               24.0000
CBWIDTH              16.0000
TSLAB                20.0000
KFXTS                F
BSLAB                15.0000
KFXBS                F
WALLR                12.0000
FXW                  F
WALLR                12.0000
FXI                  F
OMMENTS              SKEW:
SKEW                 40.0000
SKEW                 130.0000
SKEW                 130.0000
OMMENTS              CONCRETE COVER:
OVS                  2.0000
OVB                  2.0000
COVW                 2.0000
COVIN                2.0000
COMMENTS             DEAD LOADS:
PRESS                140.000
PMIN                 42.000
PWAT                 0.000
EDLU                 153.0000
NFILL                0.0000
NWEAR                0.0000
FILLFA               1.1500
SIFACT               1.1500
COMMENTS             LIVE LOADS:
LVLD                 HL-93-TRUCK
LVLD                 HL-93-TANDEM
LVOMT                NO
```

```
                                PAGE  3
                            DATE 10/30/2014
                   BRASS-CULVERT(LRFD)  Version 2.2.9a
                          TOPROCK COMPRESSOR STATION

LLPATCH             PL
SURCH               0.0000
NLANES              1
LIMIT_DIST          NO
LRFDDF              YES
COMMENTS            REBAR REVIEW:
DESREV              YES
TCBSZ               7
TCBSP               6.0000
BCBSZ               7
BCBSP               6.0000
TSIFTSZ             7
TSIFTSP             6.0000
TSOFTSZ             7
TSOFTSP             6.0000
BSIFTSZ             7
BSIFTSP             6.0000
BSOFTSZ             7
BSOFTSP             6.0000
EWIFVSZ             5
EWIFVSP             12.0000
EWOFVSZ             7
EWOFVSP             12.0000
IWVSZ               5
IWVSP               12.0000

End of Input File No.  1
==========================================================================================
```



```
                                PAGE  4
                            DATE 10/30/2014
                   BRASS-CULVERT(LRFD)  Version 2.2.9a
                          TOPROCK COMPRESSOR STATION

_____________________________________________________________________________

Note:
    The following list of variables are used in the
       application.  They are shown in US units because
       that is the internal computational mode.

    The first set are the variables defaulted
       from input and the second set are system
       variables.

_____________________________________________________________________________


 Units
 USSI_UNITS:     Input Units                            =      US
 USSI_UNITS_OU:  Output Units                           =      US

_____________________________________________________________________________
 Design Variables
 LRFDDF:  Use LRFD method for bot slab load distrib.    =       T
 CUTYPE:  Precast(PC) or Cast in Place(CIP) Culvert     =     CIP
 IDSN:    Design Method                                 =    LRFD
 FUNCT:   Design (DESIGN) or Design Review (DESREV)     =  DESREV
 IRELEASE:Moment Continuity Released (@ end of walls)   =       F
 DNEG:    Distance to Neg. Moment Computation Point     =    0.00
_____________________________________________________________________________
 Output Control Variables
 MTEN:   Output Moment-Shears                           =       T
 IINFN:  Output Influence Line                          =       T
 IBSH:   Output Bar Schedule                            =       F

_____________________________________________________________________________
 Standard Load Variables
 LVLD:   Live Load Vehicle Name                         = HL-93-TRUCK
 LVLD:   Live Load Vehicle Name                         = HL-93-TANDEM
 LVOMT:  Neglect LL for Fill > 8Ft & Fill > Span        =       F
```

```
                              PAGE  5
                          DATE 10/30/2014
                 BRASS-CULVERT(LRFD)  Version 2.2.9a
                        TOPROCK COMPRESSOR STATION

Uniform Dead Load Variable
EDLU:     Extra Uniform Dead Load (Lbs/Ft)            =   153.0
NWEAR:    Thickness of Wearing Surface (in)           =     0.0

Concentrated Dead Load Variables
EDLC1:   Extra Concentrated Dead Load (Lbs)           =     0.0
EDLX1:   Position of Load from CL of Left Wall (Ft)   =     0.0
EDLC2:   Extra Concentrated Dead Load (Lbs)           =     0.0
EDLX2:   Position of Load from CL of Left Wall (Ft)   =     0.0
EDLC3:   Extra Concentrated Dead Load (Lbs)           =     0.0
EDLX3:   Position of Load from CL of Left Wall (Ft)   =     0.0

Soil and Water Pressure Variables
SURCH:  Depth of Surcharge                            =     0.0
PRESS:  Maximum Soil Equiv. Fluid Pressure(Pcf)       =   140.0
PMIN:   Minimum Soil Equiv. Fluid Pressure(Pcf)       =    42.0
PWAT:   Internal Water Pressure                       =     0.0

Geometry - Box Dimension Variables
NBOX:   Number of Boxes (1 TO 4)                      =       2
NSPAN:  Clear Span (Ft)                               =    20.0
NHITE:  Clear Height (Ft)                             =     6.0
NFILL:  Design Fill Measured from Top of Top Slab(Ft) =     0.0
LENG:   Section length(PC)-Culvert Length(CIP)(Ft)    =    32.0

Geometry - Slab Thickness Variables
TSLAB:  Thickness of top Slab (In)                    =    20.0
BSLAB:  Thickness of Bottom Slab(In)                  =    15.0
WALLR:  Thickness of Exterior Wall (In)               =    12.0

IWALLR: Minimum Value for Interior Wall(In)           =    12.0

IWALLR: Minimum Value for Interior Wall(In)           =    12.0
KFXI:   Code for Interior Wall(F=Fixed,V=Variable)    =       F
```



```
                              PAGE  6
                          DATE 10/30/2014
                 BRASS-CULVERT(LRFD)  Version 2.2.9a
                        TOPROCK COMPRESSOR STATION

Geometry - Skew and Haunch Variables
LSKEW:  Left End Skew Angle(Deg)                      =   130.0
RSKEW:  Right End Skew Angle (Deg)                    =   130.0
CSKEW:  Culvert Skew Angle (Deg)                      =    40.0
TFILT:  Top Haunch (In)                               =     0.0
BFILT:  Bottom Haunch (In)                            =     0.0
KHACH:  Haunches used in Analysis (YES/NO)            =     YES

Geometry - Clear Concrete Cover
COVS:   Exterior Concrete Cover Top Slab (In)         =     2.0
COVB:   Exterior Concrete Cover Bottom Slab (In)      =     2.0
COVW:   Exterior Concrete Cover Walls (In)            =     2.0
COVIN:  Interior Concrete Cover (In)                  =     2.0

Material Properties Variables
EWGT:  Weight of Soil (Pcf)                           =   140.0
FYST:  Yield Strength of Reinf.  Steel (Psi)          = 60000.0
FSTL:  Allowable Stress of Reinf. Steel(Psi)(ASD)     = 36000.0
FCONC: Compressive Strength of Concrete (Psi)         =  4000.0
FSHR:  Shear in Concrete (Psi)(ASD)                   =     0.0
FSTIR: Allowable Stress in Stirrups (Psi)(ASD)        =     0.0
CWGT:  Weight of Concrete (Pcf)                       =   150.0
AWGT:  Weight of Wearing Surface (Pcf)                =   145.0
```

```
                                PAGE  7
                            DATE 10/30/2014
                   BRASS-CULVERT(LRFD)  Version 2.2.9a
                          TOPROCK COMPRESSOR STATION

ZEE:     Crack Width Parameter from AASHTO            =   155.0
CN:      Modular Ratio of Concrete                    =     8.0
CE:      Modulus of Elasticity of Concrete(ksi)       =  3644.1

ZEE:     Crack Width Parameter from AASHTO            =     0.9
CN:      Modular Ratio of Concrete                    =     0.9
CE:      Modulus of Elasticity of Concrete(ksi)       =

Service-I load and resistance factors
EV: Vertical Earth Pressure max-min    1.00 1.00
DC: Components max-min                 1.00 1.00
DW: Wearing Surfaces max-min           1.00 1.00
EH: Horizontal Earth Pressure Passive  1.00
LS: Live load surcharge                1.00
WA: Water load and stream pressure     1.00
LL: Vehicular live load                1.00

Strength-I load and resistance factors
EV: Vertical Earth Pressure max-min    1.30 0.90
DC: Components max-min                 1.25 0.90
DW: Wearing Surfaces max-min           1.50 0.65
EH: Horizontal Earth Pressure Passive  1.35
LS: Live load surcharge                1.75
WA: Water load and stream pressure     1.00
LL: Vehicular live load                1.75

Strength-II load and resistance factors
EV: Vertical Earth Pressure max-min    1.30 0.90
DC: Components max-min                 1.25 0.90
DW: Wearing Surfaces max-min           1.50 0.65
EH: Horizontal Earth Pressure Passive  1.35
LS: Live load surcharge                1.35
WA: Water load and stream pressure     1.00
LL: Vehicular live load                1.35

Fatigue load and resistance factors
EV: Vertical Earth Pressure max-min    0.00 0.00
DC: Components max-min                 0.00 0.00
DW: Wearing Surfaces max-min           0.00 0.00
EH: Horizontal Earth Pressure Passive  0.00
LS: Live load surcharge                0.75
WA: Water load and stream pressure     0.00
LL: Vehicular live load                0.75

B1:  Ratio Depth Compressive Zone AASHTO 5.7.2.2      =     0.85
BB:  Factor Load Factor Po and Pb AASHTO              =     0.80
BETAD:  Dead Load Multiplier for Load Factor          =     1.0000
BETAL:   Live Load Multiplier for Load Factor         =     0.0000
PHIMOM:  Phi Factor for Moment                        =     0.9000
PHISHR:  Phi Factor for Shear                         =     0.8500
GAMMA:   Load Factor Actions Multiplier               =     1.3000
```



```
                                PAGE  8
                            DATE 10/30/2014
                   BRASS-CULVERT(LRFD)  Version 2.2.9a
                          TOPROCK COMPRESSOR STATION

IFATIG:  Check Fatigue                                  =       F
IHAUCH:  Code for Considering Haunch in Analysis        =       F
ILES5:   Code for Span Less Than 5 ft                   =       F
ISHR:    Code for Shear Stress Check                    =       F

KBASE:  Bottom Slab Support Code(FULL,FIXED,HINGED)     =     FULL
LDPASS: Bypass Live Load if no vehicle input            =       F
LONGB:  Longitudinal Bar Code                           =       F
MESSGE: Code for Message Printout                       =       T

 JOB DESCRIPTION

 Title        : TOPROCK COMPRESSOR STATION
 Structure ID : BOX
 Agency name  :

 Input units  : US
 Output units : US

 ANALYSIS CONTROL
                                Moment      Bottom Slab  Negative
 Construction   Design/      Continuity  Support      Moment
 Type           Review       Released    Code         Position

 CAST-IN-PLACE  DESREV        NO         FULL          0.00

Consider Haunches in Analysis                     :  YES
Perform Edge Beam reinforcement computations      :  NO
Use epoxy coated bars in top mat of reinforcement:  NO
      in top slab

 Design        Limit State Load and Resistance Factors
 Method        Ductility    Redundant   Operations

 LOAD & R  1.0000       1.0000      1.00
```

```
                              PAGE  9
                          DATE 10/30/2014
                   BRASS-CULVERT(LRFD)  Version 2.2.9a
                         TOPROCK COMPRESSOR STATION

OUTPUT CONTROLS

 Drawing File:                                NO
 Actions at tenth Points:                     YES
 Bar Schedule:                                NO
 Live Load Influence Ordinates:               YES
 Live Load Actions Envelope:                  YES
 Default Output:                              YES
 Intermediate Design Iteration Computations: YES
 Intermediate Computations                    YES

 MATERIAL PROPERTIES

  Concrete  Concrete  Crack Width   Steel    Steel
  f'c       Ec          Gamma E       Fy       n
  (Psi)     (Psi)     (Kip/in)      (Psi)
  4000.    3644147.   0.75          60000.   7.96

Note:
        1. The concrete unit weight used for the
           Ec computation is 5 pcf less
           than used for load computations


        2. The crack width coefficient is the
           coefficient in Eq. 5.7.3.4-2 for the
           crack width parameter Z


  Unit Weights
  Concrete    Soil Fill   Wearing Surface
  (Pcf)       (Pcf)       (Pcf)
   150.        140.        145.

Note:
        1. The soil structure interaction factor
           has been entered by the user.
           The value of  1.15 will be used.
```



```
                              PAGE 10
                          DATE 10/30/2014
                   BRASS-CULVERT(LRFD)  Version 2.2.9a
                         TOPROCK COMPRESSOR STATION

BOX GEOMETRY

Culvert     Span     Clear     Centerline
Cells       Length   Height    Length
            (Ft)     (Ft)      (Ft)
DOUBLE      20.00    6.00      32.00

Bridge   Clear Bridge  Number of
Width    Width         Traffic Lanes
(Ft)     (Ft)
24.00    16.00          1


Slab and Wall Information

Top             Bottom             Exterior            Interior
Slab            Slab               Wall                Wall
(In)            (In)               (In)                (In)
20.00 Fixed     15.00 Fixed        12.00 Fixed         12.00 Fixed

 LIVE LOADS

 Vehicle Designation
 HL-93-TRUCK
 HL-93-TANDEM

 Live Load Control:  NO
   (Neglect Live Load if fill is greater than 8 ft.
   and fill is greater than culvert span)

 Tire application model: patch load
 Live Load Surcharge:  0.0 Ft

 DEAD LOADS

         Concentrated Loads
  Wgt.      Dis.      Wgt.      Dis.      Wgt.      Dis.
  (Kips)    (Ft)      (Kips)    (Ft)      (Kips)    (Ft)
   0.0      0.0        0.0       0.0       0.0       0.0

 Soil            Water
 Pressure        Density
  Max     Min
 (Pcf)   (Pcf)   (Pcf)
  ****    42.0     0.0

           Wearing
 Uniform   Surface    Fill
 Load      Thickness  Height
 (plf)     (in)       (Ft)
 153.0      0.00       0.00
```

```
                              PAGE 11
                           DATE 10/30/2014
                  BRASS-CULVERT(LRFD)  Version 2.2.9a
                         TOPROCK COMPRESSOR STATION

_____________________________________________________________________
  SKEW

  Skew     Skew     Skew
  Left     Right    Center
  (Deg)    (Deg)    (Deg)
  130.0    130.0     40.0

_____________________________________________________________________
  HAUNCHES

  Top Haunch   Bottom Haunch
  Height       Height
  (In)         (In)
   0.0          0.0

_____________________________________________________________________
  CONCRETE COVER to face of bar

  Top    Bottom  Exterior Interior
  Slab   Slab    Wall     Wall
  (In)   (In)    (In)     (In)
   2.00   2.00    2.00     2.00
```



```
                              PAGE 12
                           DATE 10/30/2014
                  BRASS-CULVERT(LRFD)  Version 2.2.9a
                         TOPROCK COMPRESSOR STATION


     Bar sizes and spacings with computed areas of steel

     Areas of steel are in in2/ft

                                  Top slab
    LEFT SIDE                      CENTER                        RIGHT SIDE
    area  1.2000 in2               area  1.2000 in2              area  1.2000 in2
    size  7 spaced at   6.00 in.   size  7 spaced at   6.00 in.  size  7 spaced at   6.00 in.
*************************************************************************

 Exterior wall                                                     Interior wall
 TOP                                                               TOP
 area  1.2000 in2                                                  area  0.3100 in2
 size  7 spaced at   6.00 in.                                      size  5 spaced at  12.00 in.


 INSIDE FACE                                                       EACH FACE
 area  0.3100 in2                                                  area  0.3100 in2
 size  5 spaced at  12.00 in.                                      size  5 spaced at  12.00 in.

 OUTSIDE FACE
 area  0.6000 in2
 size  7 spaced at  12.00


 BOTTOM                                                            BOTTOM
 area  1.2000 in2                                                  area  0.3100 in2
 size  7 spaced at   6.00 in.                                      size  5 spaced at  12.00 in.
*************************************************************************

                             Bottom slab
    LEFT SIDE                      CENTER                        RIGHT SIDE
    area  1.2000 in2               area  1.2000 in2              area  1.2000 in2
    size  7 spaced at   6.00 in.   size  7 spaced at   6.00 in.  size  7 spaced at   6.00 in.

    EXTERIOR WALL Minimum Thickness Based on Cover and Layer Clearance
    AASHTO LRFD Section 5.10.3.1 (minimum thickness)
    Equation 2 = exterior wall cover plus the diameter of two #6 bars and
    two #4 bars plus  the inside wall/slab cover plus 1 in clearance

    Required Thickness is   8.00 Inches
```

PAGE 13
DATE 10/30/2014
BRASS-CULVERT(LRFD) Version 2.2.9a
TOPROCK COMPRESSOR STATION

LRFD Live Load Distribution Factor Computation

Input Values

Depth of Fill	= 0.00	ft.
Span Length	= 20.00	ft.
Truck Gage	= 6.00	ft.
Soil Distribution Factor	= 1.15	
Tire Patch Width	= 20.00	in.
Bridge Width	= 24.00	ft.
Lay Length	= 32.00	ft.

Compute Strip Width by 4.6.2.10.2-1

(
)
E = 96 + 1.44 S ft
E = 96 + 1.44 20.00 ft.
E = 10.40 ft.

Controlling Distribution Factor

Final Strip Width = 10.40 ft.

Final Distribution Factor = 1/Final Strip Width = **0.096** Lanes per ft. of width

Multiple Presence Factor = 1.20

Distribution Factor * Multiple Presence Factor = **0.115**

Notes:

1. Only the one lane loaded case is considered. The one lane loaded multiple presence factor is used. See 12.11.2.1, 3.6.1.3.3, and 4.6.2.10.
2. Lane loads are not applied. See 3.6.1.3.3. This applies to all approximate strip methods.
3. The distribution factor for fills of 2 feet or greater is bounded by the distribution factor computed in 4.6.2.10. See 3.6.1.2.6.

PAGE 14
DATE 10/30/2014
BRASS-CULVERT(LRFD) Version 2.2.9a
TOPROCK COMPRESSOR STATION

```
Number of cells                          =     2
Top Slab thickness                       =    20.0000 In.
Bottom Slab thickness                    =    15.0000 In.
Exterior Wall thickness                  =    12.0000 In.
Interior wall thickness                  =    12.00 In.
            Design Span(c-c walls)       =    21.0000 Ft.
Design Height(c-c slabs)                 =     7.4583 Ft.
Fill Height(top of slab)                 =     0.0000 Ft.
Wearing surface thickness                =     0.0000 In.

    Loads based on 1 foot unit width
Soil Structure Interaction Factor        =     1.1500
Earth Weight for fill computations       =     0.1610 Kcf

Weight of Fill without wearing surface   =     0.0000 Klf
Weight of Wearing Surface                =     0.0000 Klf
Weight of Top Slab                       =     0.2500 Klf
Weight of Extra Uniform Dead Load        =     0.1530 Klf
Uniform Dead Load on Top Slab            =     0.4030 Klf

Weight of Walls divided by culvert width =     0.0628 Klf
Uniform Dead Load on Bottom Slab         =     0.4658 Klf


Soil pressure at center of top slab      =     0.1167 Klf
Soil pressure at center of bottom slab   =     1.1608 Klf

Soil pressure due to live load surcharge =     0.0000 Klf

Impact Factor on Top Slab & Walls        =     0.3300
Impact Factor on Bottom Slab             =      0.0000

Axle Load Distribution Factor on:
Top Slab & Walls                         =     0.0000
on Bottom Slab                           =     0.0000
```

Note:

1. The weight of the walls is computed by taking the interior wall thickness plus twice the exterior wall thickness and multiplying by the clear height of the culvert and the weight of concrete. That result is divided by the span length times the number of cells plus the wall thicknesses.

2. The soil pressure computations use the fill height and the culvert height for appropriate values for lateral earth pressures. Wearing surface, fill height, and slab thickness are used in vertical dead load computations.

3. The distribution width and associated distribution factor for the top slab is computed according to AASHTO LRFD 4.6.2.10 for fill depth less than 2 ft. and AASHTO LRFD 3.6.1.2.6 for fill depths over 2 ft. Also, see 3.6.1.3.3.

```
                                PAGE 15
                             DATE 10/30/2014
                   BRASS-CULVERT(LRFD)  Version 2.2.9a
                          TOPROCK COMPRESSOR STATION


For a HL-93-TRUCK  Vehicle
Description AASHTO LRFD HL-93 Design Truck (US)
The Number of axles =    3


 Axle Weights      Spacing
       (kips)        (ft)

        8.00      14.000
       32.00      14.000
       32.00       0.000

      ------      ------
Totals 72.00      28.000
```



```
                                PAGE 16
                             DATE 10/30/2014
                   BRASS-CULVERT(LRFD)  Version 2.2.9a
                          TOPROCK COMPRESSOR STATION


For a HL-93-TRUCK  Vehicle
Description AASHTO LRFD HL-93 Design Truck (US)

The number of simulated axles based on fill =    3

The number of simulated axles is calculated based
on the longitudinal distribution length of each axle
divided by the simulated axle spacing of 1 foot
and the simulated axle weights are calculated by
dividing the vehicle axle weights by the number of
simulated axles per vehicle axle.


  Truck facing backwards      Truck facing forward
        Axle wts.   Spacing       Axle wts.   Spacing
        (kips)        (ft)        (kips)        (ft)
         8.00        0.000        32.00        0.000
        32.00       14.000        32.00       14.000
        32.00       14.000         8.00       14.000

      -------     -------      -------     -------
Totals  72.00       28.000        72.00       28.000


Note: Impact or distribution is not included in the above table.
```

PAGE 17
DATE 10/30/2014
BRASS-CULVERT(LRFD) Version 2.2.9a
TOPROCK COMPRESSOR STATION

Current Live Load: HL-93-TRUCK

Unfactored MOMENTS (per unit design width)
due to Dead and Live Loads including Distribution and Impact

M-PT	Dead Load Kft	Soil Press (Max) Kft	Soil Press (Min) Kft	Surch Hgt. Kft	Water Press (Max) Kft	LIVE LOADS Pos Kft	LIVE LOADS Neg Kft
EXTERIOR WALL BOTTOM							
1- 0	-8.29	-1.53	-0.46	0.00	0.00	0.00	-5.21
1- 1	-7.66	0.32	0.10	0.00	0.00	0.00	-4.49
1- 2	-7.04	1.58	0.47	0.00	0.00	0.00	-4.20
1- 3	-6.41	2.31	0.69	0.00	0.00	0.00	-4.21
1- 4	-5.79	2.57	0.77	0.00	0.00	0.00	-4.23
1- 5	-5.16	2.42	0.73	0.00	0.00	0.00	-4.25
1- 6	-4.54	1.91	0.57	0.00	0.00	0.26	-4.32
1- 7	-3.91	1.11	0.33	0.00	0.00	0.70	-4.45
1- 8	-3.28	0.06	0.02	0.00	0.00	1.32	-4.58
1- 9	-2.66	-1.16	-0.35	0.00	0.00	2.09	-4.86
1-10	-2.03	-2.51	-0.75	0.00	0.00	2.85	-5.26
EXTERIOR WALL TOP							
TOP SLAB LEFT SIDE							
2- 0	-2.03	-2.51	-0.75	0.00	0.00	2.85	-5.26
2- 1	4.07	-2.13	-0.64	0.00	0.00	6.80	-0.55
2- 2	8.38	-1.75	-0.53	0.00	0.00	12.83	0.00
2- 3	10.93	-1.38	-0.41	0.00	0.00	16.35	-0.73
2- 4	11.69	-1.00	-0.30	0.00	0.00	17.57	-1.65
2- 5	10.68	-0.62	-0.19	0.00	0.00	17.38	-2.58
2- 6	7.89	-0.24	-0.07	0.00	0.00	15.81	-3.66
2- 7	3.33	0.14	0.04	0.00	0.00	12.77	-4.75
2- 8	-3.02	0.52	0.15	0.00	0.00	7.85	-5.83
2- 9	-11.14	0.89	0.27	0.00	0.00	0.79	-10.61
2-10	-21.04	1.27	0.38	0.00	0.00	0.00	-18.52
TOP SLAB RIGHT SIDE							
INTERIOR WALL BOTTOM							
3- 0	0.15	0.15	0.04	0.00	0.00	1.17	-1.02
3- 1	0.11	0.12	0.04	0.00	0.00	0.61	-0.49
3- 2	0.08	0.09	0.03	0.00	0.00	0.15	-0.10
3- 3	0.05	0.05	0.02	0.00	0.00	0.65	-0.60
3- 4	0.02	0.02	0.01	0.00	0.00	1.20	-1.18
3- 5	-0.01	-0.01	0.00	0.00	0.00	1.75	-1.76
3- 6	-0.04	-0.04	-0.01	0.00	0.00	2.30	-2.35
3- 7	-0.07	-0.07	-0.02	0.00	0.00	2.85	-2.93
3- 8	-0.10	-0.10	-0.03	0.00	0.00	3.40	-3.51
3- 9	-0.13	-0.13	-0.04	0.00	0.00	3.95	-4.10
3-10	-0.16	-0.17	-0.05	0.00	0.00	4.50	-4.68
INTERIOR WALL TOP							

PAGE 18
DATE 10/30/2014
BRASS-CULVERT(LRFD) Version 2.2.9a
TOPROCK COMPRESSOR STATION

BOTTOM SLAB LEFT SIDE							
4- 0	-8.29	-1.53	-0.46	0.00	0.00	0.00	-5.21
4- 1	-0.37	-1.30	-0.39	0.00	0.00	0.70	-0.80
4- 2	5.49	-1.08	-0.32	0.00	0.00	3.59	0.00
4- 3	9.30	-0.85	-0.26	0.00	0.00	5.73	0.00
4- 4	11.05	-0.62	-0.19	0.00	0.00	6.70	0.00
4- 5	10.75	-0.40	-0.12	0.00	0.00	6.52	0.00
4- 6	8.40	-0.17	-0.05	0.00	0.00	5.18	0.00
4- 7	3.99	0.06	0.02	0.00	0.00	2.68	0.00
4- 8	-2.47	0.28	0.08	0.00	0.00	0.00	-1.82
4- 9	-10.99	0.51	0.15	0.00	0.00	0.00	-6.63
4-10	-21.56	0.74	0.22	0.00	0.00	0.00	-12.61
BOTTOM SLAB RIGHT SIDE							

PAGE 19
DATE 10/30/2014
BRASS-CULVERT(LRFD) Version 2.2.9a
TOPROCK COMPRESSOR STATION

Current Live Load: HL-93-TRUCK

Unfactored SHEARS (per unit design width)
due to Dead and Live Loads including Distribution and Impact

M-PT	Dead Load K	Soil Press (Max) K	Soil Press (Min) K	Surch Hgt. K	Water Press (Max) K	LIVE LOADS Pos K	LIVE LOADS Neg K
EXTERIOR WALL BOTTOM							
1- 0	0.84	2.90	0.87	0.00	0.00	1.02	-0.54
1- 1	0.84	2.07	0.62	0.00	0.00	1.02	-0.54
1- 2	0.84	1.32	0.40	0.00	0.00	1.02	-0.54
1- 3	0.84	0.65	0.20	0.00	0.00	1.02	-0.54
1- 4	0.84	0.06	0.02	0.00	0.00	1.02	-0.54
1- 5	0.84	-0.46	-0.14	0.00	0.00	1.02	-0.54
1- 6	0.84	-0.89	-0.27	0.00	0.00	1.02	-0.54
1- 7	0.84	-1.25	-0.38	0.00	0.00	1.02	-0.54
1- 8	0.84	-1.53	-0.46	0.00	0.00	1.02	-0.54
1- 9	0.84	-1.74	-0.52	0.00	0.00	1.02	-0.54
1-10	0.84	-1.86	-0.56	0.00	0.00	1.02	-0.54
EXTERIOR WALL TOP							
TOP SLAB LEFT SIDE							
2- 0	3.33	0.18	0.05	0.00	0.00	5.94	-0.52
2- 1	2.48	0.18	0.05	0.00	0.00	4.54	-0.52
2- 2	1.63	0.18	0.05	0.00	0.00	3.64	-1.02
2- 3	0.79	0.18	0.05	0.00	0.00	2.95	-1.56
2- 4	-0.06	0.18	0.05	0.00	0.00	2.37	-2.32
2- 5	-0.90	0.18	0.05	0.00	0.00	1.80	-3.05
2- 6	-1.75	0.18	0.05	0.00	0.00	1.26	-3.70
2- 7	-2.60	0.18	0.05	0.00	0.00	0.41	-4.30
2- 8	-3.44	0.18	0.05	0.00	0.00	0.00	-5.06
2- 9	-4.29	0.18	0.05	0.00	0.00	0.00	-5.96
2-10	-5.14	0.18	0.05	0.00	0.00	0.00	-6.39
TOP SLAB RIGHT SIDE							
INTERIOR WALL BOTTOM							
3- 0	-0.04	-0.04	-0.01	0.00	0.00	0.74	-0.78
3- 1	-0.04	-0.04	-0.01	0.00	0.00	0.74	-0.78
3- 2	-0.04	-0.04	-0.01	0.00	0.00	0.74	-0.78
3- 3	-0.04	-0.04	-0.01	0.00	0.00	0.74	-0.78
3- 4	-0.04	-0.04	-0.01	0.00	0.00	0.74	-0.78
3- 5	-0.04	-0.04	-0.01	0.00	0.00	0.74	-0.78
3- 6	-0.04	-0.04	-0.01	0.00	0.00	0.74	-0.78
3- 7	-0.04	-0.04	-0.01	0.00	0.00	0.74	-0.78
3- 8	-0.04	-0.04	-0.01	0.00	0.00	0.74	-0.78
3- 9	-0.04	-0.04	-0.01	0.00	0.00	0.74	-0.78
3-10	-0.04	-0.04	-0.01	0.00	0.00	0.74	-0.78
INTERIOR WALL TOP							

PAGE 20
DATE 10/30/2014
BRASS-CULVERT(LRFD) Version 2.2.9a
TOPROCK COMPRESSOR STATION

BOTTOM SLAB LEFT SIDE							
4- 0	4.26	0.11	0.03	0.00	0.00	2.43	0.00
4- 1	3.28	0.11	0.03	0.00	0.00	1.88	0.00
4- 2	2.30	0.11	0.03	0.00	0.00	1.32	0.00
4- 3	1.32	0.11	0.03	0.00	0.00	0.77	0.00
4- 4	0.35	0.11	0.03	0.00	0.00	0.22	0.00
4- 5	-0.63	0.11	0.03	0.00	0.00	0.00	-0.37
4- 6	-1.61	0.11	0.03	0.00	0.00	0.00	-0.93
4- 7	-2.59	0.11	0.03	0.00	0.00	0.00	-1.48
4- 8	-3.57	0.11	0.03	0.00	0.00	0.00	-2.03
4- 9	-4.54	0.11	0.03	0.00	0.00	0.00	-2.58
4-10	-5.52	0.11	0.03	0.00	0.00	0.00	-3.14
BOTTOM SLAB RIGHT SIDE							

PAGE 21
DATE 10/30/2014
BRASS-CULVERT(LRFD) Version 2.2.9a
TOPROCK COMPRESSOR STATION

Current Live Load: HL-93-TRUCK

Unfactored AXIAL FORCES (per unit design width)
due to Dead and Live Loads including Distribution and Impact

M-PT	Dead Load K	Soil Press (Max) K	Soil Press (Min) K	Surch Hgt. K	Water Press (Max) K	LIVE LOADS Pos K	LIVE LOADS Neg K
EXTERIOR WALL BOTTOM							
1- 0	-3.33	-0.18	-0.05	0.00	0.00	0.52	-5.70
1- 1	-3.33	-0.18	-0.05	0.00	0.00	0.52	-5.70
1- 2	-3.33	-0.18	-0.05	0.00	0.00	0.52	-5.70
1- 3	-3.33	-0.18	-0.05	0.00	0.00	0.52	-5.70
1- 4	-3.33	-0.18	-0.05	0.00	0.00	0.52	-5.70
1- 5	-3.33	-0.18	-0.05	0.00	0.00	0.52	-5.70
1- 6	-3.33	-0.18	-0.05	0.00	0.00	0.52	-5.70
1- 7	-3.33	-0.18	-0.05	0.00	0.00	0.52	-5.70
1- 8	-3.33	-0.18	-0.05	0.00	0.00	0.52	-5.70
1- 9	-3.33	-0.18	-0.05	0.00	0.00	0.52	-5.70
1-10	-3.33	-0.18	-0.05	0.00	0.00	0.52	-5.70
EXTERIOR WALL TOP							
TOP SLAB LEFT SIDE							
2- 0	0.84	-1.86	-0.56	0.00	0.00	1.02	-0.54
2- 1	0.84	-1.86	-0.56	0.00	0.00	1.02	-0.54
2- 2	0.84	-1.86	-0.56	0.00	0.00	1.02	-0.54
2- 3	0.84	-1.86	-0.56	0.00	0.00	1.02	-0.54
2- 4	0.84	-1.86	-0.56	0.00	0.00	1.02	-0.54
2- 5	0.84	-1.86	-0.56	0.00	0.00	1.02	-0.54
2- 6	0.84	-1.86	-0.56	0.00	0.00	1.02	-0.54
2- 7	0.84	-1.86	-0.56	0.00	0.00	1.02	-0.54
2- 8	0.84	-1.86	-0.56	0.00	0.00	1.02	-0.54
2- 9	0.84	-1.86	-0.56	0.00	0.00	1.02	-0.54
2-10	0.84	-1.86	-0.56	0.00	0.00	1.02	-0.54
TOP SLAB RIGHT SIDE							
INTERIOR WALL BOTTOM							
3- 0	-10.29	0.34	0.10	0.00	0.00	0.00	-8.27
3- 1	-10.29	0.34	0.10	0.00	0.00	0.00	-8.27
3- 2	-10.29	0.34	0.10	0.00	0.00	0.00	-8.27
3- 3	-10.29	0.34	0.10	0.00	0.00	0.00	-8.27
3- 4	-10.29	0.34	0.10	0.00	0.00	0.00	-8.27
3- 5	-10.29	0.34	0.10	0.00	0.00	0.00	-8.27
3- 6	-10.29	0.34	0.10	0.00	0.00	0.00	-8.27
3- 7	-10.29	0.34	0.10	0.00	0.00	0.00	-8.27
3- 8	-10.29	0.34	0.10	0.00	0.00	0.00	-8.27
3- 9	-10.29	0.34	0.10	0.00	0.00	0.00	-8.27
3-10	-10.29	0.34	0.10	0.00	0.00	0.00	-8.27
INTERIOR WALL TOP							

PAGE 22
DATE 10/30/2014
BRASS-CULVERT(LRFD) Version 2.2.9a
TOPROCK COMPRESSOR STATION

BOTTOM SLAB LEFT SIDE							
4- 0	-0.84	-2.90	-0.87	0.00	0.00	0.54	-1.02
4- 1	-0.84	-2.90	-0.87	0.00	0.00	0.54	-1.02
4- 2	-0.84	-2.90	-0.87	0.00	0.00	0.54	-1.02
4- 3	-0.84	-2.90	-0.87	0.00	0.00	0.54	-1.02
4- 4	-0.84	-2.90	-0.87	0.00	0.00	0.54	-1.02
4- 5	-0.84	-2.90	-0.87	0.00	0.00	0.54	-1.02
4- 6	-0.84	-2.90	-0.87	0.00	0.00	0.54	-1.02
4- 7	-0.84	-2.90	-0.87	0.00	0.00	0.54	-1.02
4- 8	-0.84	-2.90	-0.87	0.00	0.00	0.54	-1.02
4- 9	-0.84	-2.90	-0.87	0.00	0.00	0.54	-1.02
4-10	-0.84	-2.90	-0.87	0.00	0.00	0.54	-1.02
BOTTOM SLAB RIGHT SIDE							

Factors for Ductility 1.00
Redundancy 1.00
Operations 1.00

PAGE 23
DATE 10/30/2014
BRASS-CULVERT(LRFD) Version 2.2.9a
TOPROCK COMPRESSOR STATION

Fatigue Checks

$f_s <= f_f = 24 - 0.33f_{min}$ (5.5.3.2-1)

where:

f_s = actual stress range in the reinforcement

f_f = maximum allowable stress range

Member	Location	f_{min} (kip / in.^{2})	f_f (kip / in.^{2})	f_s (kip / in.^{2})	Result
EXTERIOR WALL	Top	34.971	24011.54	4481.88	Pass
TOP SLAB	Left	100.086	24033.03	2213.07	Pass
TOP SLAB	Middle +	146.323	24048.29	9499.83	Pass
INTERIOR WALL	Bottom	-675.759	23777.00	896.18	Pass
INTERIOR WALL	Middle	-462.227	23847.46	4591.58	Pass
INTERIOR WALL	Top	-462.227	23847.46	12396.54	Pass
BOTTOM SLAB	Left	96.067	24031.70	2648.28	Pass

PAGE 24
DATE 10/30/2014
BRASS-CULVERT(LRFD) Version 2.2.9a
TOPROCK COMPRESSOR STATION

LRFD Crack Control Computation

Current Vehicle: AASHTO LRFD HL-93 Design Truck (US)

Location	γ_e	h (in.)	d_c (in.)	β_s	Max Spacing ()	Current Spacing (in.)	Allowable Stress ()	Actual Stress (kip / in.^{2})
Top slab, outside corner	$f_r > f_c$, therefore no check necessary.							
Top slab, inside face	0.75000000	20.00000000	2.00000000	1.15873015	22.55640602	6.00000000	45.30821991	17.06112671
Top slab, outside face	0.75000000	20.00000000	2.00000000	1.15873015	17.99756241	6.00000000	45.30821991	20.59692764
Bottom slab, outside corner	$f_r > f_c$, therefore no check necessary.							
Bottom slab, inside face	0.75000000	15.00000000	2.00000000	1.21978021	25.79764366	6.00000000	43.04054642	14.44427681
Bottom slab, outside face	0.75000000	15.00000000	2.00000000	1.21978021	13.43420506	6.00000000	43.04054642	24.68741226
Ext. wall, outside face	0.75000000	12.00000000	2.00000000	1.28571427	16.87239265	12.00000000	25.52083588	19.56332207
Ext. wall, inside face	$f_r > f_c$, therefore no check necessary.							
Interior wall	$f_r > f_c$, therefore no check necessary.							

```
                                PAGE 25
                             DATE 10/30/2014
                   BRASS-CULVERT(LRFD)  Version 2.2.9a
                          TOPROCK COMPRESSOR STATION


     Bar sizes and spacings with computed areas of steel

     Areas of steel are in in2/ft

                                Top slab
    LEFT SIDE                    CENTER                      RIGHT SIDE
    area  1.2000 in2             area  1.2000 in2            area  1.2000 in2
    size  7 spaced at   6.00 in. size  7 spaced at   6.00 in. size  7 spaced at   6.00 in.
*************************************************************************

 Exterior wall                                                Interior wall
 TOP                                                          TOP
 area  1.2000 in2                                             area  0.3100 in2
 size  7 spaced at   6.00 in.                                 size  5 spaced at  12.00 in.


 INSIDE FACE                                                  EACH FACE
 area  0.3100 in2                                             area  0.3100 in2
 size  5 spaced at  12.00 in.                                 size  5 spaced at  12.00 in.

 OUTSIDE FACE
 area  0.6000 in2
 size  7 spaced at  12.00


 BOTTOM                                                       BOTTOM
 area  1.2000 in2                                             area  0.3100 in2
 size  7 spaced at   6.00 in.                                 size  5 spaced at  12.00 in.
*************************************************************************

                           Bottom slab
    LEFT SIDE                    CENTER                      RIGHT SIDE
    area  1.2000 in2             area  1.2000 in2            area  1.2000 in2
    size  7 spaced at   6.00 in. size  7 spaced at   6.00 in. size  7 spaced at   6.00 in.
```



```
                                PAGE 26
                             DATE 10/30/2014
                   BRASS-CULVERT(LRFD)  Version 2.2.9a
                          TOPROCK COMPRESSOR STATION

_____________________________________________________________________________

  Serviceability, Fatigue, and Other Checks
_____________________________________________________________________________

    Based on crack control check
    AASHTO 5.7.3.4 LRFD

    Slenderness check on walls passed
    Eccentricity check on walls passed
_____________________________________________________________________________

  Reinforcing Bar Stresses Sizes and Spacing
_____________________________________________________________________________


Note: Bar stresses are based on bending and axial stress only
      Stresses are in ksi
      Area of steel in square inches per ft
      Spacing and H and V legs are in inches

 Bar Mark                Description
 A1            Top Corner Outside face Max Neg Moment
 A100          Top Slab Inside face  Max Pos Moment
 A300          Top Slab Outside face Max Neg Moment Interior support
 A2            Bottom Corner Outside face Max Neg Moment
 A200          Bottom Slab Inside face  Max Pos Moment
 A400          Bottom Slab Outside face Max Neg Moment Interior support
 B2            Exterior Wall Outside face Max Neg Moment
 B1            Exterior Wall Inside face  Max Pos Moment
 B3            Interior Wall Both faces


 Bar Type    Fs Act.  Fs All.         Area steel       Size  Spacing   H    V
                                    Input    Provided    US
             (Ksi)    (Ksi)         (In2)     (In2)     Bars   (In)   (In) (In)


  A1           4.20     0.00      1.2000     1.2000       7     6.0    53   49
  A2           9.90    20.60      1.2000     1.2000       7     6.0    41   44
  A100        17.06    45.31      1.2000     1.2000       7     6.0
  A300        20.60    45.31      1.2000     1.2000       7     6.0
  A200        14.44    43.04      1.2000     1.2000       7     6.0
  A400        24.69    43.04      1.2000     1.2000       7     6.0
  B1           0.00    19.56      0.3100     0.3100       5    12.0
  B2          19.56    25.52      0.6000     0.6000       7    12.0
  B3           0.00    19.56      0.3100     0.3100       5    12.0
```

PAGE 27
DATE 10/30/2014
BRASS-CULVERT(LRFD) Version 2.2.9a
TOPROCK COMPRESSOR STATION

Notes:
1. Area of steel is the maximum required for all limit states. The strength computations are shown in the results at critical sections table.

2. Design thickness shown in the following table is based on the appropriate cover minus half the diameter of the bar in the above table or one-half the diameter of a #6 bar. The actual half bar diameter is used once the steel has been selected and the #6 bar is used in design iterations.

3. For a Design review run the actual bar stresses shown can be the stress at either side of a member corner or the stress at the middle of the slab for a multiple cell group. The required As is actual in a Design review.

4. If the user wishes to ignore crack control the allowable steel stress is set at 0.95 Fy. This limit will likely not control the design, but it if should, this will control yielding under service loads.

PAGE 28
DATE 10/30/2014
BRASS-CULVERT(LRFD) Version 2.2.9a
TOPROCK COMPRESSOR STATION

Output at Critical Sections (per unit design width)

Member No. = 1 EXTERIOR WALL
Thickness = 12.00 (in)
Clear cover at end = 2.00 (in)
Clear cover at middle = 2.00 (in)
Bar diameter (bot) = 0.88 (in)
Bar diameter (mid+) = 0.62 (in)
Bar diameter (mid-) = 0.88 (in)
Bar diameter (top) = 0.88 (in)

	Moment Kft	Coin. Axial Force Kips	Shear Force Kips	Shear Cap Kips	Resistance Po Cap Kips	Mu Cap Kft	Mbal Cap Kft	Pbal Cap Kips	Steel Area In2	Mom. Cap Kft	Des. Thk in	Flexure Ratings Inv	Oper
BOT	-17.9	14.3	4.7	17.5	385.9	46.9	64.1	99.4	1.2000	47.5	9.56	4.7	6.1
MID	-1.7	14.3	2.4	38.6	356.0	13.2	51.8	144.2	0.3100	13.5	9.69	n/a	n/a
MID-	-12.3	14.3	0.9	19.0	365.8	24.6	55.6	128.2	0.6000	25.0	9.56	3.8	5.0
TOP	-13.4	14.4	2.4	20.3	385.9	46.9	64.1	99.4	1.2000	47.5	9.56	5.5	7.1

Member No. = 2 TOP SLAB
Thickness = 20.00 (in)
Clear cover at end = 2.00 (in)
Clear cover at middle = 2.00 (in)
Bar diameter (lt) = 0.88 (in)
Bar diameter (mid) = 0.88 (in)
Bar diameter (rt) = 0.88 (in)

LT	-11.9	2.8	11.4	35.6	616.3	90.1	170.5	230.8	1.2000	90.1	17.56	11.9	15.5
MID	44.5	3.0	2.6	28.6	616.3	90.1	170.5	230.8	1.2000	90.2	17.56	2.6	3.3
RT	-51.4	1.6	15.7	24.9	616.3	90.1	170.5	230.8	1.2000	90.1	17.56	2.3	3.0

Member No. = 3 INTERIOR WALL
Thickness = 12.00 (in)
Clear cover at end = 2.00 (in)
Clear cover at middle = 2.00 (in)
Bar diameter (bot) = 0.62 (in)
Bar diameter (mid+) = 0.62 (in)
Bar diameter (mid-) = 0.62 (in)
Bar diameter (top) = 0.62 (in)

BOT	-0.8	23.4	1.2	41.2	356.0	13.2	51.8	144.2	0.3100	14.0	9.69	13.6	17.6
MID	3.0	23.4	1.2	41.2	356.0	13.2	51.8	144.2	0.3100	14.0	9.69	4.6	5.9
MID-	-3.1	26.8	1.2	41.9	356.0	13.2	51.8	144.2	0.3100	14.3	9.69	2.3	3.0
TOP	-7.4	26.8	1.5	41.4	356.0	13.2	51.8	144.2	0.3100	14.3	9.69	2.3	3.0

Member No. = 4 BOTTOM SLAB
Thickness = 15.00 (in)
Clear cover at end = 2.00 (in)
Clear cover at middle = 2.00 (in)
Bar diameter (lt) = 0.88 (in)
Bar diameter (mid) = 0.88 (in)
Bar diameter (rt) = 0.88 (in)

LT	-17.5	7.2	8.1	23.4	472.3	63.1	98.9	148.7	1.2000	63.3	12.56	7.3	9.5
MID	25.0	6.9	0.4	22.9	472.3	63.1	98.9	148.7	1.2000	63.3	12.56	4.4	5.7
RT	-42.8	5.4	10.6	17.3	472.3	63.1	98.9	148.7	1.2000	63.2	12.56	2.1	2.7

Warnings:
1. For exterior corners, BRASS-CULVERT does not perform a check on both the exterior wall and top or bottom slab. BRASS-CULVERT only checks the location that it has determined requires a greater area of steel. Because of this, BRASS-CULVERT may check one location for a particular culvert (e.g. top of the wall) and a different location (e.g. left end of top slab) for the same culvert with a different depth of fill.

2. If the flexural resistance is zero and rebar has been entered, it could be due to the axial load being higher than the tensile capacity of the rebar provide. For example, the axial load is greater than the area of steel times the yield strength of the bars.

PAGE 29
DATE 10/30/2014
BRASS-CULVERT(LRFD) Version 2.2.9a
TOPROCK COMPRESSOR STATION

Notes:

1. Flexure rating value of n/a indicates no live load effect on the member

2. SS value adjacent to steel area indicates a simply supported culvert and a steel area is not required

3. AASHTO LRFD Sec. 5.7.4 with 94-99 Interims
   Po -- Axial capacity at zero eccentricity (no moment)
   Mu -- Flexural Capacity without an axial load
   Pbal -- Axial load at balanced strain
   Mbal -- Moment at balanced state of strain

4. Coin. is the coincident axial force

5. The plane of computation for shear is a "d" distance from the face of the supporting member

6. The plane of computation for moment if haunches are used is based on AASHTO 8.8.2

7. The plane of computation for moment if haunches are not used is based on the user input

8. An asterisk next to the Design Moment indicates the Moment is greater than the All Mom. Value

9. An asterisk next to the Shear Value indicates the Shear is greater than the Allowable Shear

10. Rating factors computations consider the effect of axial force. The Allowable Moment value is used with the maximum soil pressure.

11. The load combinations and envelope of critical action combinations are shown in the C:\Projects\Bat Cave Wash\BRASSCULVERT\BOXCULVERT2_Min Horz.ooo file.

12. For fills less than 2.0 feet, Article 5.14.4.1 applies, and shear is assumed to adequate because the section has been designed for moment.

PAGE 30
DATE 10/30/2014
BRASS-CULVERT(LRFD) Version 2.2.9a
TOPROCK COMPRESSOR STATION

Factored Actions for Load and Resistance Factor Design at Tenth Points (per unit design width)

M-Pt	+Moment (Kft)	-Moment (Kft)	+A.F. (Kips)	-A.F. (Kips)	+Shear (Kips)	-Shear (Kips)
EXTERIOR WALL BOTTOM						
1- 0	-8.840	-21.776	-2.254	-14.405	6.754	2.420
1- 1	-6.469	-17.157	-2.335	-14.297	5.637	1.675
1- 2	-4.202	-14.721	-2.335	-14.297	4.626	1.001
1- 3	-2.650	-13.310	-2.335	-14.297	3.720	0.397
1- 4	-1.734	-12.326	-2.335	-14.297	2.919	-0.136
1- 5	-1.377	-11.719	-2.335	-14.297	2.429	-0.874
1- 6	-1.052	-11.510	-2.335	-14.297	2.035	-1.530
1- 7	-0.791	-11.679	-2.335	-14.297	1.711	-2.069
1- 8	-0.550	-12.063	-2.335	-14.297	1.458	-2.492
1- 9	0.217	-13.561	-2.254	-14.405	1.274	-2.798
1-10	0.901	-15.506	-2.254	-14.405	1.161	-2.986
EXTERIOR WALL TOP						
TOP SLAB LEFT SIDE						
2- 0	0.901	-15.506	0.867	-2.693	14.795	2.252
2- 1	15.067	-0.504	1.161	-2.986	11.281	1.490
2- 2	31.364	4.917	1.161	-2.986	8.664	-0.158
2- 3	41.030	6.501	1.161	-2.986	6.390	-1.866
2- 4	44.465	6.138	1.161	-2.986	4.335	-3.980
2- 5	43.210	4.177	1.161	-2.986	2.578	-6.308
2- 6	37.309	0.335	1.161	-2.986	0.877	-8.499
2- 7	26.683	-5.189	0.322	-1.868	-1.385	-10.616
2- 8	11.720	-13.514	0.028	-1.574	-2.856	-12.994
2- 9	-7.434	-31.693	0.028	-1.574	-3.618	-15.636
2-10	-17.217	-57.567	0.028	-1.574	-4.380	-17.444
TOP SLAB RIGHT SIDE						
INTERIOR WALL BOTTOM						
3- 0	2.436	-1.516	-12.403	-23.424	1.214	-1.484
3- 1	1.367	-0.652	-12.403	-23.424	1.214	-1.484
3- 2	0.480	-0.029	-12.403	-23.424	1.214	-1.484
3- 3	1.284	-0.948	-12.403	-23.424	1.214	-1.484
3- 4	2.161	-2.021	-12.403	-23.424	1.214	-1.484
3- 5	3.048	-3.107	-8.955	-26.821	1.214	-1.484
3- 6	3.954	-4.214	-8.955	-26.821	1.214	-1.484
3- 7	4.860	-5.321	-8.955	-26.821	1.214	-1.484
3- 8	5.766	-6.428	-8.955	-26.821	1.214	-1.484
3- 9	6.671	-7.536	-8.955	-26.821	1.214	-1.484
3-10	7.577	-8.643	-8.955	-26.821	1.214	-1.484
INTERIOR WALL TOP						

```
                                PAGE 31
                             DATE 10/30/2014
                   BRASS-CULVERT(LRFD)  Version 2.2.9a
                          TOPROCK COMPRESSOR STATION


BOTTOM SLAB LEFT SIDE
 4- 0     -8.840    -21.776     -2.420     -7.189      9.719      3.930
 4- 1     -0.292     -3.818     -2.420     -7.189      7.530      3.050
 4- 2     12.180      3.323     -2.713     -6.895      5.340      2.170
 4- 3     20.876      7.091     -2.713     -6.895      3.151      1.289
 4- 4     24.980      9.010     -2.713     -6.895      0.961      0.409
 4- 5     24.486      9.080     -2.713     -6.895     -0.423     -1.348
 4- 6     19.402      7.302     -2.713     -6.895     -1.303     -3.537
 4- 7      9.753      3.641     -4.018     -5.155     -2.184     -5.727
 4- 8     -1.844     -6.027     -3.725     -5.449     -3.064     -7.917
 4- 9     -9.202    -24.887     -3.725     -5.449     -3.944    -10.106
 4-10    -18.410    -48.346     -3.725     -5.449     -4.825    -12.296
BOTTOM SLAB RIGHT SIDE
```



```
                                PAGE 32
                             DATE 10/30/2014
                   BRASS-CULVERT(LRFD)  Version 2.2.9a
                          TOPROCK COMPRESSOR STATION


 The Influence values have been written to "input file name"_INF.out


_____________________________________________________________________

 Output complete for a HL-93-TRUCK  vehicle
_____________________________________________________________________
```

PAGE 49
DATE 10/30/2014
BRASS-CULVERT(LRFD) Version 2.2.9a
TOPROCK COMPRESSOR STATION

LRFD Live Load Distribution Factor Computation

Input Values

Depth of Fill	= 0.00	ft.
Span Length	= 20.00	ft.
Truck Gage	= 6.00	ft.
Soil Distribution Factor	= 1.15	
Tire Patch Width	= 20.00	in.
Bridge Width	= 24.00	ft.
Lay Length	= 32.00	ft.

Compute Strip Width by 4.6.2.10.2-1

(
)
E = 96 + 1.44 S ft
E = 96 + 1.44 20.00 ft.
E = 10.40 ft.

Controlling Distribution Factor

Final Strip Width = 10.40 ft.

Final Distribution Factor = 1/Final Strip Width = **0.096** Lanes per ft. of width

Multiple Presence Factor = 1.20

Distribution Factor * Multiple Presence Factor = **0.115**

Notes:

1. Only the one lane loaded case is considered. The one lane loaded multiple presence factor is used. See 12.11.2.1, 3.6.1.3.3, and 4.6.2.10.
2. Lane loads are not applied. See 3.6.1.3.3. This applies to all approximate strip methods.
3. The distribution factor for fills of 2 feet or greater is bounded by the distribution factor computed in 4.6.2.10. See 3.6.1.2.6.

PAGE 50
DATE 10/30/2014
BRASS-CULVERT(LRFD) Version 2.2.9a
TOPROCK COMPRESSOR STATION

For a HL-93-TANDEM Vehicle
Description AASHTO LRFD HL-93 Design Tandem (US)
The Number of axles = 2

	Axle Weights (kips)	Spacing (ft)
	25.00	4.000
	25.00	0.000
	---	---
Totals	50.00	4.000

PAGE 51
DATE 10/30/2014
BRASS-CULVERT(LRFD) Version 2.2.9a
TOPROCK COMPRESSOR STATION

For a HL-93-TANDEM Vehicle
Description AASHTO LRFD HL-93 Design Tandem (US)

The number of simulated axles based on fill = 2

The number of simulated axles is calculated based on the longitudinal distribution length of each axle divided by the simulated axle spacing of 1 foot and the simulated axle weights are calculated by dividing the vehicle axle weights by the number of simulated axles per vehicle axle.

	Truck facing backwards		Truck facing forward	
	Axle wts. (kips)	Spacing (ft)	Axle wts. (kips)	Spacing (ft)
	25.00	0.000	25.00	0.000
	25.00	4.000	25.00	4.000
	---	---	---	---
Totals	50.00	4.000	50.00	4.000

Note: Impact or distribution is not included in the above table.

PAGE 52
DATE 10/30/2014
BRASS-CULVERT(LRFD) Version 2.2.9a
TOPROCK COMPRESSOR STATION

Current Live Load: HL-93-TANDEM

Unfactored MOMENTS (per unit design width)
due to Dead and Live Loads including Distribution and Impact

M-PT	Dead Load Kft	Soil Press (Max) Kft	Soil Press (Min) Kft	Surch Hgt. Kft	Water Press (Max) Kft	LIVE LOADS Pos Kft	LIVE LOADS Neg Kft
EXTERIOR WALL BOTTOM							
1- 0	-8.29	-1.53	-0.46	0.00	0.00	0.00	-3.80
1- 1	-7.66	0.32	0.10	0.00	0.00	0.00	-3.17
1- 2	-7.04	1.58	0.47	0.00	0.00	0.00	-3.18
1- 3	-6.41	2.31	0.69	0.00	0.00	0.00	-3.74
1- 4	-5.79	2.57	0.77	0.00	0.00	0.00	-4.32
1- 5	-5.16	2.42	0.73	0.00	0.00	0.00	-4.90
1- 6	-4.54	1.91	0.57	0.00	0.00	0.34	-5.47
1- 7	-3.91	1.11	0.33	0.00	0.00	1.03	-6.05
1- 8	-3.28	0.06	0.02	0.00	0.00	1.72	-6.62
1- 9	-2.66	-1.16	-0.35	0.00	0.00	2.41	-7.20
1-10	-2.03	-2.51	-0.75	0.00	0.00	3.10	-7.77
EXTERIOR WALL TOP							
TOP SLAB LEFT SIDE							
2- 0	-2.03	-2.51	-0.75	0.00	0.00	3.10	-7.77
2- 1	4.07	-2.13	-0.64	0.00	0.00	7.03	-0.65
2- 2	8.38	-1.75	-0.53	0.00	0.00	14.53	0.00
2- 3	10.93	-1.38	-0.41	0.00	0.00	19.46	-1.06
2- 4	11.69	-1.00	-0.30	0.00	0.00	21.60	-2.44
2- 5	10.68	-0.62	-0.19	0.00	0.00	21.29	-3.83
2- 6	7.89	-0.24	-0.07	0.00	0.00	19.47	-5.22
2- 7	3.33	0.14	0.04	0.00	0.00	15.10	-6.61
2- 8	-3.02	0.52	0.15	0.00	0.00	8.67	-7.99
2- 9	-11.14	0.89	0.27	0.00	0.00	1.10	-9.38
2-10	-21.04	1.27	0.38	0.00	0.00	0.00	-17.20
TOP SLAB RIGHT SIDE							
INTERIOR WALL BOTTOM							
3- 0	0.15	0.15	0.04	0.00	0.00	1.60	-1.51
3- 1	0.11	0.12	0.04	0.00	0.00	0.80	-0.72
3- 2	0.08	0.09	0.03	0.00	0.00	0.16	-0.14
3- 3	0.05	0.05	0.02	0.00	0.00	0.86	-0.84
3- 4	0.02	0.02	0.01	0.00	0.00	1.65	-1.63
3- 5	-0.01	-0.01	0.00	0.00	0.00	2.43	-2.43
3- 6	-0.04	-0.04	-0.01	0.00	0.00	3.22	-3.24
3- 7	-0.07	-0.07	-0.02	0.00	0.00	4.01	-4.04
3- 8	-0.10	-0.10	-0.03	0.00	0.00	4.79	-4.85
3- 9	-0.13	-0.13	-0.04	0.00	0.00	5.58	-5.65
3-10	-0.16	-0.17	-0.05	0.00	0.00	6.37	-6.46
INTERIOR WALL TOP							

PAGE 53
DATE 10/30/2014
BRASS-CULVERT(LRFD) Version 2.2.9a
TOPROCK COMPRESSOR STATION

BOTTOM SLAB LEFT SIDE

4- 0	-8.29	-1.53	-0.46	0.00	0.00	0.00	-3.80
4- 1	-0.37	-1.30	-0.39	0.00	0.00	1.01	-0.72
4- 2	5.49	-1.08	-0.32	0.00	0.00	3.22	0.00
4- 3	9.30	-0.85	-0.26	0.00	0.00	4.64	0.00
4- 4	11.05	-0.62	-0.19	0.00	0.00	5.24	0.00
4- 5	10.75	-0.40	-0.12	0.00	0.00	5.06	0.00
4- 6	8.40	-0.17	-0.05	0.00	0.00	4.08	0.00
4- 7	3.99	0.06	0.02	0.00	0.00	2.31	0.00
4- 8	-2.47	0.28	0.08	0.00	0.00	0.00	-1.76
4- 9	-10.99	0.51	0.15	0.00	0.00	0.00	-5.14
4-10	-21.56	0.74	0.22	0.00	0.00	0.00	-9.32

BOTTOM SLAB RIGHT SIDE

PAGE 54
DATE 10/30/2014
BRASS-CULVERT(LRFD) Version 2.2.9a
TOPROCK COMPRESSOR STATION

Current Live Load: HL-93-TANDEM

Unfactored SHEARS (per unit design width)
due to Dead and Live Loads including Distribution and Impact

M-PT	Dead Load K	Soil Press (Max) K	Soil Press (Min) K	Surch Hgt. K	Water Press (Max) K	LIVE Pos K	LOADS Neg K
EXTERIOR WALL BOTTOM							
1- 0	0.84	2.90	0.87	0.00	0.00	0.93	-0.77
1- 1	0.84	2.07	0.62	0.00	0.00	0.93	-0.77
1- 2	0.84	1.32	0.40	0.00	0.00	0.93	-0.77
1- 3	0.84	0.65	0.20	0.00	0.00	0.93	-0.77
1- 4	0.84	0.06	0.02	0.00	0.00	0.93	-0.77
1- 5	0.84	-0.46	-0.14	0.00	0.00	0.93	-0.77
1- 6	0.84	-0.89	-0.27	0.00	0.00	0.93	-0.77
1- 7	0.84	-1.25	-0.38	0.00	0.00	0.93	-0.77
1- 8	0.84	-1.53	-0.46	0.00	0.00	0.93	-0.77
1- 9	0.84	-1.74	-0.52	0.00	0.00	0.93	-0.77
1-10	0.84	-1.86	-0.56	0.00	0.00	0.93	-0.77
EXTERIOR WALL TOP							
TOP SLAB LEFT SIDE							
2- 0	3.33	0.18	0.05	0.00	0.00	6.68	-0.66
2- 1	2.48	0.18	0.05	0.00	0.00	5.57	-0.66
2- 2	1.63	0.18	0.05	0.00	0.00	4.69	-0.88
2- 3	0.79	0.18	0.05	0.00	0.00	3.80	-1.67
2- 4	-0.06	0.18	0.05	0.00	0.00	2.92	-2.45
2- 5	-0.90	0.18	0.05	0.00	0.00	2.08	-3.34
2- 6	-1.75	0.18	0.05	0.00	0.00	1.32	-4.23
2- 7	-2.60	0.18	0.05	0.00	0.00	0.66	-5.09
2- 8	-3.44	0.18	0.05	0.00	0.00	0.23	-5.89
2- 9	-4.29	0.18	0.05	0.00	0.00	0.00	-6.61
2-10	-5.14	0.18	0.05	0.00	0.00	0.00	-6.92
TOP SLAB RIGHT SIDE							
INTERIOR WALL BOTTOM							
3- 0	-0.04	-0.04	-0.01	0.00	0.00	1.06	-1.08
3- 1	-0.04	-0.04	-0.01	0.00	0.00	1.06	-1.08
3- 2	-0.04	-0.04	-0.01	0.00	0.00	1.06	-1.08
3- 3	-0.04	-0.04	-0.01	0.00	0.00	1.06	-1.08
3- 4	-0.04	-0.04	-0.01	0.00	0.00	1.06	-1.08
3- 5	-0.04	-0.04	-0.01	0.00	0.00	1.06	-1.08
3- 6	-0.04	-0.04	-0.01	0.00	0.00	1.06	-1.08
3- 7	-0.04	-0.04	-0.01	0.00	0.00	1.06	-1.08
3- 8	-0.04	-0.04	-0.01	0.00	0.00	1.06	-1.08
3- 9	-0.04	-0.04	-0.01	0.00	0.00	1.06	-1.08
3-10	-0.04	-0.04	-0.01	0.00	0.00	1.06	-1.08
INTERIOR WALL TOP							

PAGE 55
DATE 10/30/2014
BRASS-CULVERT(LRFD) Version 2.2.9a
TOPROCK COMPRESSOR STATION

BOTTOM SLAB LEFT SIDE

4- 0	4.26	0.11	0.03	0.00	0.00	1.70	0.00
4- 1	3.28	0.11	0.03	0.00	0.00	1.32	0.00
4- 2	2.30	0.11	0.03	0.00	0.00	0.93	0.00
4- 3	1.32	0.11	0.03	0.00	0.00	0.55	0.00
4- 4	0.35	0.11	0.03	0.00	0.00	0.17	0.00
4- 5	-0.63	0.11	0.03	0.00	0.00	0.00	-0.29
4- 6	-1.61	0.11	0.03	0.00	0.00	0.00	-0.68
4- 7	-2.59	0.11	0.03	0.00	0.00	0.00	-1.06
4- 8	-3.57	0.11	0.03	0.00	0.00	0.00	-1.44
4- 9	-4.54	0.11	0.03	0.00	0.00	0.00	-1.83
4-10	-5.52	0.11	0.03	0.00	0.00	0.00	-2.21

BOTTOM SLAB RIGHT SIDE

PAGE 56
DATE 10/30/2014
BRASS-CULVERT(LRFD) Version 2.2.9a
TOPROCK COMPRESSOR STATION

Current Live Load: HL-93-TANDEM

Unfactored AXIAL FORCES (per unit design width)
due to Dead and Live Loads including Distribution and Impact

M-PT	Dead Load K	Soil Press (Max) K	Soil Press (Min) K	Surch Hgt. K	Water Press (Max) K	LIVE Pos K	LOADS Neg K
EXTERIOR WALL BOTTOM							
1- 0	-3.33	-0.18	-0.05	0.00	0.00	0.66	-6.68
1- 1	-3.33	-0.18	-0.05	0.00	0.00	0.66	-6.68
1- 2	-3.33	-0.18	-0.05	0.00	0.00	0.66	-6.68
1- 3	-3.33	-0.18	-0.05	0.00	0.00	0.66	-6.68
1- 4	-3.33	-0.18	-0.05	0.00	0.00	0.66	-6.68
1- 5	-3.33	-0.18	-0.05	0.00	0.00	0.66	-6.68
1- 6	-3.33	-0.18	-0.05	0.00	0.00	0.66	-6.68
1- 7	-3.33	-0.18	-0.05	0.00	0.00	0.66	-6.68
1- 8	-3.33	-0.18	-0.05	0.00	0.00	0.66	-6.68
1- 9	-3.33	-0.18	-0.05	0.00	0.00	0.66	-6.68
1-10	-3.33	-0.18	-0.05	0.00	0.00	0.66	-6.68
EXTERIOR WALL TOP							
TOP SLAB LEFT SIDE							
2- 0	0.84	-1.86	-0.56	0.00	0.00	0.92	-0.77
2- 1	0.84	-1.86	-0.56	0.00	0.00	0.92	-0.77
2- 2	0.84	-1.86	-0.56	0.00	0.00	0.92	-0.77
2- 3	0.84	-1.86	-0.56	0.00	0.00	0.92	-0.77
2- 4	0.84	-1.86	-0.56	0.00	0.00	0.92	-0.77
2- 5	0.84	-1.86	-0.56	0.00	0.00	0.92	-0.77
2- 6	0.84	-1.86	-0.56	0.00	0.00	0.92	-0.77
2- 7	0.84	-1.86	-0.56	0.00	0.00	0.92	-0.77
2- 8	0.84	-1.86	-0.56	0.00	0.00	0.92	-0.77
2- 9	0.84	-1.86	-0.56	0.00	0.00	0.92	-0.77
2-10	0.84	-1.86	-0.56	0.00	0.00	0.92	-0.77
TOP SLAB RIGHT SIDE							
INTERIOR WALL BOTTOM							
3- 0	-10.29	0.34	0.10	0.00	0.00	0.00	-7.67
3- 1	-10.29	0.34	0.10	0.00	0.00	0.00	-7.67
3- 2	-10.29	0.34	0.10	0.00	0.00	0.00	-7.67
3- 3	-10.29	0.34	0.10	0.00	0.00	0.00	-7.67
3- 4	-10.29	0.34	0.10	0.00	0.00	0.00	-7.67
3- 5	-10.29	0.34	0.10	0.00	0.00	0.00	-7.67
3- 6	-10.29	0.34	0.10	0.00	0.00	0.00	-7.67
3- 7	-10.29	0.34	0.10	0.00	0.00	0.00	-7.67
3- 8	-10.29	0.34	0.10	0.00	0.00	0.00	-7.67
3- 9	-10.29	0.34	0.10	0.00	0.00	0.00	-7.67
3-10	-10.29	0.34	0.10	0.00	0.00	0.00	-7.67
INTERIOR WALL TOP							

```
                              PAGE 57
                          DATE 10/30/2014
                 BRASS-CULVERT(LRFD)  Version 2.2.9a
                        TOPROCK COMPRESSOR STATION


BOTTOM SLAB LEFT SIDE
    4- 0   -0.84   -2.90   -0.87    0.00    0.00    0.77   -0.92
    4- 1   -0.84   -2.90   -0.87    0.00    0.00    0.77   -0.92
    4- 2   -0.84   -2.90   -0.87    0.00    0.00    0.77   -0.92
    4- 3   -0.84   -2.90   -0.87    0.00    0.00    0.77   -0.92
    4- 4   -0.84   -2.90   -0.87    0.00    0.00    0.77   -0.92
    4- 5   -0.84   -2.90   -0.87    0.00    0.00    0.77   -0.92
    4- 6   -0.84   -2.90   -0.87    0.00    0.00    0.77   -0.92
    4- 7   -0.84   -2.90   -0.87    0.00    0.00    0.77   -0.92
    4- 8   -0.84   -2.90   -0.87    0.00    0.00    0.77   -0.92
    4- 9   -0.84   -2.90   -0.87    0.00    0.00    0.77   -0.92
    4-10   -0.84   -2.90   -0.87    0.00    0.00    0.77   -0.92
BOTTOM SLAB RIGHT SIDE


Factors for Ductility   1.00
            Redundancy  1.00
            Operations  1.00
```



```
                              PAGE 58
                          DATE 10/30/2014
                 BRASS-CULVERT(LRFD)  Version 2.2.9a
                        TOPROCK COMPRESSOR STATION
```

Fatigue Checks

$f_s <= f_f = 24 - 0.33f_{min}$ (5.5.3.2-1)

where:

f_s = actual stress range in the reinforcement

f_f = maximum allowable stress range

Member	Location	f_{min} (kip / in.^{2})	f_f (kip / in.^{2})	f_s (kip / in.^{2})	Result
EXTERIOR WALL	Top	48.305	24015.94	6715.62	Pass
TOP SLAB	Left	138.247	24045.62	3413.55	Pass
TOP SLAB	Middle +	217.651	24071.82	11689.96	Pass
TOP SLAB	Middle -	217.651	24071.82	8484.65	Pass
INTERIOR WALL	Bottom	-1005.171	23668.29	2166.68	Pass
INTERIOR WALL	Middle	-638.461	23789.31	8441.59	Pass
INTERIOR WALL	Top	-638.461	23789.31	17104.07	Pass
BOTTOM SLAB	Left	132.694	24043.79	2171.00	Pass

```
                    PAGE 59
                 DATE 10/30/2014
BRASS-CULVERT(LRFD)  Version 2.2.9a
        TOPROCK COMPRESSOR STATION
```

LRFD Crack Control Computation

Current Vehicle: AASHTO LRFD HL-93 Design Tandem (US)

Location	γ_e	h (in.)	d_c (in.)	β_s	Max Spacing ()	Current Spacing (in.)	Allowable Stress ()	Actual Stress (kip / in.^{2})
Top slab, outside corner	$f_r > f_c$, therefore no check necessary.							
Top slab, inside face	0.75000000	20.00000000	2.00000000	1.15873015	19.31227112	6.00000000	45.30821991	19.43535233
Top slab, outside face	0.75000000	20.00000000	2.00000000	1.15873015	18.84609032	6.00000000	45.30821991	19.83193588
Bottom slab, outside corner	$f_r > f_c$, therefore no check necessary.							
Bottom slab, inside face	0.75000000	15.00000000	2.00000000	1.21978021	28.49244118	6.00000000	43.04054642	13.24632454
Bottom slab, outside face	0.75000000	15.00000000	2.00000000	1.21978021	15.27200508	6.00000000	43.04054642	22.33319283
Ext. wall, outside face	0.75000000	12.00000000	2.00000000	1.28571427	16.67749786	12.00000000	25.52083588	19.74771500
Ext. wall, inside face	$f_r > f_c$, therefore no check necessary.							
Interior wall	$f_r > f_c$, therefore no check necessary.							


```
                    PAGE 60
                 DATE 10/30/2014
BRASS-CULVERT(LRFD)  Version 2.2.9a
        TOPROCK COMPRESSOR STATION


     Bar sizes and spacings with computed areas of steel

     Areas of steel are in in2/ft

                                Top slab
    LEFT SIDE                    CENTER                        RIGHT SIDE
    area  1.2000 in2             area  1.2000 in2              area  1.2000 in2
    size  7 spaced at   6.00 in. size  7 spaced at   6.00 in. size  7 spaced at   6.00 in.
*************************************************************************

 Exterior wall                                                 Interior wall
TOP                                                            TOP
area  1.2000 in2                                               area  0.3100 in2
size  7 spaced at   6.00 in.                                   size  5 spaced at  12.00 in.


INSIDE FACE                                                    EACH FACE
area  0.3100 in2                                               area  0.3100 in2
size  5 spaced at  12.00 in.                                   size  5 spaced at  12.00 in.

OUTSIDE FACE
area  0.6000 in2
size  7 spaced at  12.00


BOTTOM                                                         BOTTOM
area  1.2000 in2                                               area  0.3100 in2
size  7 spaced at   6.00 in.                                   size  5 spaced at  12.00 in.
*************************************************************************

                          Bottom slab
    LEFT SIDE                    CENTER                        RIGHT SIDE
    area  1.2000 in2             area  1.2000 in2              area  1.2000 in2
    size  7 spaced at   6.00 in. size  7 spaced at   6.00 in. size  7 spaced at   6.00 in.
```

PAGE 61
DATE 10/30/2014
BRASS-CULVERT(LRFD) Version 2.2.9a
TOPROCK COMPRESSOR STATION

Serviceability, Fatigue, and Other Checks

Based on crack control check
AASHTO 5.7.3.4 LRFD

Slenderness check on walls passed
Eccentricity check on walls passed

Reinforcing Bar Stresses Sizes and Spacing

Note: Bar stresses are based on bending and axial stress only
Stresses are in ksi
Area of steel in square inches per ft
Spacing and H and V legs are in inches

Bar Mark	Description
A1	Top Corner Outside face Max Neg Moment
A100	Top Slab Inside face Max Pos Moment
A300	Top Slab Outside face Max Neg Moment Interior support
A2	Bottom Corner Outside face Max Neg Moment
A200	Bottom Slab Inside face Max Pos Moment
A400	Bottom Slab Outside face Max Neg Moment Interior support
B2	Exterior Wall Outside face Max Neg Moment
B1	Exterior Wall Inside face Max Pos Moment
B3	Interior Wall Both faces

Bar Type	Fs Act. (Ksi)	Fs All. (Ksi)	Area steel Input (In2)	Area steel Provided (In2)	Size US Bars	Spacing (In)	H (In)	V (In)
A1	5.35	19.56	1.2000	1.2000	7	6.0	53	49
A2	9.00	19.83	1.2000	1.2000	7	6.0	41	44
A100	19.44	45.31	1.2000	1.2000	7	6.0		
A300	19.83	45.31	1.2000	1.2000	7	6.0		
A200	13.25	43.04	1.2000	1.2000	7	6.0		
A400	22.33	43.04	1.2000	1.2000	7	6.0		
B1	0.00	19.75	0.3100	0.3100	5	12.0		
B2	19.75	25.52	0.6000	0.6000	7	12.0		
B3	0.00	19.75	0.3100	0.3100	5	12.0		

PAGE 62
DATE 10/30/2014
BRASS-CULVERT(LRFD) Version 2.2.9a
TOPROCK COMPRESSOR STATION

PAGE 63
DATE 10/30/2014
BRASS-CULVERT(LRFD) Version 2.2.9a
TOPROCK COMPRESSOR STATION

Output at Critical Sections (per unit design width)

Member No. = 1 EXTERIOR WALL

Thickness = 12.00 (in)
Clear cover at end = 2.00 (in)
Clear cover at middle = 2.00 (in)
Bar diameter (bot) = 0.88 (in)
Bar diameter (mid+) = 0.62 (in)
Bar diameter (mid-) = 0.88 (in)
Bar diameter (top) = 0.88 (in)

	Moment Kft	Coin. Axial Force Kips	Shear Force Kips	Shear Cap Kips	Resistance Po Cap Kips	Mu Cap Kft	Mbal Cap Kft	Pbal Cap Kips	Steel Area In2	Mom. Cap Kft	Des. Thk in	Flexure Ratings Inv	Flexure Ratings Oper
BOT	-15.6	16.0	4.5	18.7	385.9	46.9	64.1	99.4	1.2000	47.6	9.56	6.6	8.6
MID	-1.7	16.0	2.3	39.9	356.0	13.2	51.8	144.2	0.3100	13.6	9.69	n/a	n/a
MID-	-12.8	16.0	1.3	19.1	365.8	24.6	55.6	128.2	0.6000	25.1	9.56	3.3	4.3
TOP	-17.4	16.1	2.8	18.4	385.9	46.9	64.1	99.4	1.2000	47.6	9.56	3.8	4.9

Member No. = 2 TOP SLAB

Thickness = 20.00 (in)
Clear cover at end = 2.00 (in)
Clear cover at middle = 2.00 (in)
Bar diameter (lt) = 0.88 (in)
Bar diameter (mid) = 0.88 (in)
Bar diameter (rt) = 0.88 (in)

LT	-15.3	3.2	13.2	33.7	616.3	90.1	170.5	230.8	1.2000	90.2	17.56	8.1	10.5
MID	51.5	3.4	3.1	27.1	616.3	90.1	170.5	230.8	1.2000	90.2	17.56	2.1	2.7
RT	-49.1	2.0	16.8	25.1	616.3	90.1	170.5	230.8	1.2000	90.1	17.56	2.5	3.3

Member No. = 3 INTERIOR WALL

Thickness = 12.00 (in)
Clear cover at end = 2.00 (in)
Clear cover at middle = 2.00 (in)
Bar diameter (bot) = 0.62 (in)
Bar diameter (mid+) = 0.62 (in)
Bar diameter (mid-) = 0.62 (in)
Bar diameter (top) = 0.62 (in)

BOT	-1.3	22.4	1.8	41.0	356.0	13.2	51.8	144.2	0.3100	14.0	9.69	9.2	11.9
MID	4.2	22.4	1.8	41.0	356.0	13.2	51.8	144.2	0.3100	14.0	9.69	3.3	4.2
MID-	-4.3	25.8	1.8	41.7	356.0	13.2	51.8	144.2	0.3100	14.2	9.69	1.7	2.2
TOP	-10.1	25.8	2.0	29.7	356.0	13.2	51.8	144.2	0.3100	14.2	9.69	1.7	2.2

Member No. = 4 BOTTOM SLAB

Thickness = 15.00 (in)
Clear cover at end = 2.00 (in)
Clear cover at middle = 2.00 (in)
Bar diameter (lt) = 0.88 (in)
Bar diameter (mid) = 0.88 (in)
Bar diameter (rt) = 0.88 (in)

LT	-15.6	7.0	7.0	24.3	472.3	63.1	98.9	148.7	1.2000	63.3	12.56	10.0	12.9
MID	22.4	6.7	0.4	23.7	472.3	63.1	98.9	148.7	1.2000	63.3	12.56	5.7	7.4
RT	-37.8	5.3	9.2	18.2	472.3	63.1	98.9	148.7	1.2000	63.2	12.56	2.8	3.6

Warnings:

1. For exterior corners, BRASS-CULVERT does not perform a check on both the exterior wall and top or bottom slab. BRASS-CULVERT only checks the location that it has determined requires a greater area of steel. Because of this, BRASS-CULVERT may check one location for a particular culvert (e.g. top of the wall) and a different location (e.g. left end of top slab) for the same culvert with a different depth of fill.

2. If the flexural resistance is zero and rebar has been entered, it could be due to the axial load being higher than the tensile capacity of the rebar provide. For example, the axial load is greater than the area of steel times the yield strength of the bars.

PAGE 64
DATE 10/30/2014
BRASS-CULVERT(LRFD) Version 2.2.9a
TOPROCK COMPRESSOR STATION

Factored Actions for Load and Resistance Factor Design at Tenth Points (per unit design width)

M-Pt	+Moment (Kft)	-Moment (Kft)	+A.F. (Kips)	-A.F. (Kips)	+Shear (Kips)	-Shear (Kips)
EXTERIOR WALL BOTTOM						
1- 0	-8.840	-19.311	-2.002	-16.117	6.583	2.015
1- 1	-6.469	-14.838	-2.083	-16.009	5.467	1.271
1- 2	-4.202	-12.936	-2.083	-16.009	4.456	0.597
1- 3	-2.650	-12.488	-2.083	-16.009	3.550	-0.007
1- 4	-1.734	-12.478	-2.083	-16.009	2.749	-0.541
1- 5	-1.377	-12.840	-2.083	-16.009	2.258	-1.279
1- 6	-0.896	-13.522	-2.083	-16.009	1.864	-1.935
1- 7	-0.212	-14.471	-2.083	-16.009	1.541	-2.474
1- 8	0.149	-15.636	-2.083	-16.009	1.287	-2.897
1- 9	0.789	-17.660	-2.002	-16.117	1.104	-3.202
1-10	1.346	-19.907	-2.002	-16.117	0.990	-3.391
EXTERIOR WALL TOP						
TOP SLAB LEFT SIDE						
2- 0	1.346	-19.907	0.695	-3.092	16.090	2.000
2- 1	15.471	-0.681	0.989	-3.385	13.089	1.238
2- 2	34.328	4.917	0.989	-3.385	10.498	0.089
2- 3	46.471	5.922	0.989	-3.385	7.875	-2.054
2- 4	51.519	4.750	0.989	-3.385	5.295	-4.193
2- 5	50.050	1.979	0.989	-3.385	3.067	-6.807
2- 6	43.724	-2.392	0.989	-3.385	0.973	-9.426
2- 7	30.772	-8.444	0.150	-2.267	-0.935	-11.994
2- 8	13.158	-17.297	-0.144	-1.973	-2.458	-14.459
2- 9	-6.897	-29.536	-0.144	-1.973	-3.618	-16.763
2-10	-17.217	-55.258	-0.144	-1.973	-4.380	-18.367
TOP SLAB RIGHT SIDE						
INTERIOR WALL BOTTOM						
3- 0	3.181	-2.369	-12.403	-22.386	1.772	-2.003
3- 1	1.708	-1.057	-12.403	-22.386	1.772	-2.003
3- 2	0.492	-0.098	-12.403	-22.386	1.772	-2.003
3- 3	1.651	-1.377	-12.403	-22.386	1.772	-2.003
3- 4	2.938	-2.820	-12.403	-22.386	1.772	-2.003
3- 5	4.242	-4.282	-8.955	-25.783	1.772	-2.003
3- 6	5.563	-5.776	-8.955	-25.783	1.772	-2.003
3- 7	6.884	-7.270	-8.955	-25.783	1.772	-2.003
3- 8	8.205	-8.763	-8.955	-25.783	1.772	-2.003
3- 9	9.527	-10.257	-8.955	-25.783	1.772	-2.003
3-10	10.848	-11.751	-8.955	-25.783	1.772	-2.003
INTERIOR WALL TOP						

```
                                PAGE 65
                             DATE 10/30/2014
                   BRASS-CULVERT(LRFD)  Version 2.2.9a
                          TOPROCK COMPRESSOR STATION


BOTTOM SLAB LEFT SIDE
 4- 0     -8.840    -19.311     -2.021     -7.016      8.447      3.930
 4- 1      0.249     -3.685     -2.021     -7.016      6.553      3.050
 4- 2     11.531      3.323     -2.315     -6.722      4.659      2.170
 4- 3     18.967      7.091     -2.315     -6.722      2.765      1.289
 4- 4     22.430      9.010     -2.315     -6.722      0.871      0.409
 4- 5     21.934      9.080     -2.315     -6.722     -0.423     -1.203
 4- 6     17.481      7.302     -2.315     -6.722     -1.303     -3.097
 4- 7      9.110      3.641     -3.619     -4.982     -2.184     -4.991
 4- 8     -1.844     -5.924     -3.326     -5.276     -3.064     -6.885
 4- 9     -9.202    -22.268     -3.326     -5.276     -3.944     -8.779
 4-10    -18.410    -42.589     -3.326     -5.276     -4.825    -10.673
BOTTOM SLAB RIGHT SIDE
```



```
                                PAGE 66
                             DATE 10/30/2014
                   BRASS-CULVERT(LRFD)  Version 2.2.9a
                          TOPROCK COMPRESSOR STATION


 The Influence values have been written to "input file name"_INF.out


_____________________________________________________________________

 Output complete for a HL-93-TANDEM vehicle
_____________________________________________________________________
```

```
                              PAGE 83
                         DATE 10/30/2014
                 BRASS-CULVERT(LRFD)  Version 2.2.9a
                        TOPROCK COMPRESSOR STATION


                            ** LOAD RATING SUMMARY **


                              *INVENTORY RATING*


LOAD NO.  1: AASHTO LRFD HL-93 Design Truck (US)
   TOTAL VEHICLE WT.   :      36.000 (TONS)
   CONTROLLING MEMBER  :       4
   CONTROLLING POINT   :       3
   RATING FACTOR       :       2.058
   LOAD RATING         :      74.104 (TONS)

LOAD NO.  2: AASHTO LRFD HL-93 Design Tandem (US)
   TOTAL VEHICLE WT.   :      25.000 (TONS)
   CONTROLLING MEMBER  :       3
   CONTROLLING POINT   :       3
   RATING FACTOR       :       1.675
   LOAD RATING         :      41.877 (TONS)


                              *OPERATING RATING*


LOAD NO.  1: AASHTO LRFD HL-93 Design Truck (US)
   TOTAL VEHICLE WT.   :      36.000 (TONS)
   CONTROLLING MEMBER  :       4
   CONTROLLING POINT   :       3
   RATING FACTOR       :       2.668
   LOAD RATING         :      96.061 (TONS)

LOAD NO.  2: AASHTO LRFD HL-93 Design Tandem (US)
   TOTAL VEHICLE WT.   :      25.000 (TONS)
   CONTROLLING MEMBER  :       3
   CONTROLLING POINT   :       3
   RATING FACTOR       :       2.171
   LOAD RATING         :      54.285 (TONS)
```

①

MAX HORIZ SOIL PRESSURE

→ INCLUDING SURCHARGE + WATER PRESSURE ON EXT WALLS

→ HL93 TRUCK + LANE

$DF = 1/12.25' = 0.082$ LANES/FT

↑ SEE BRASS CULVERT CALCS

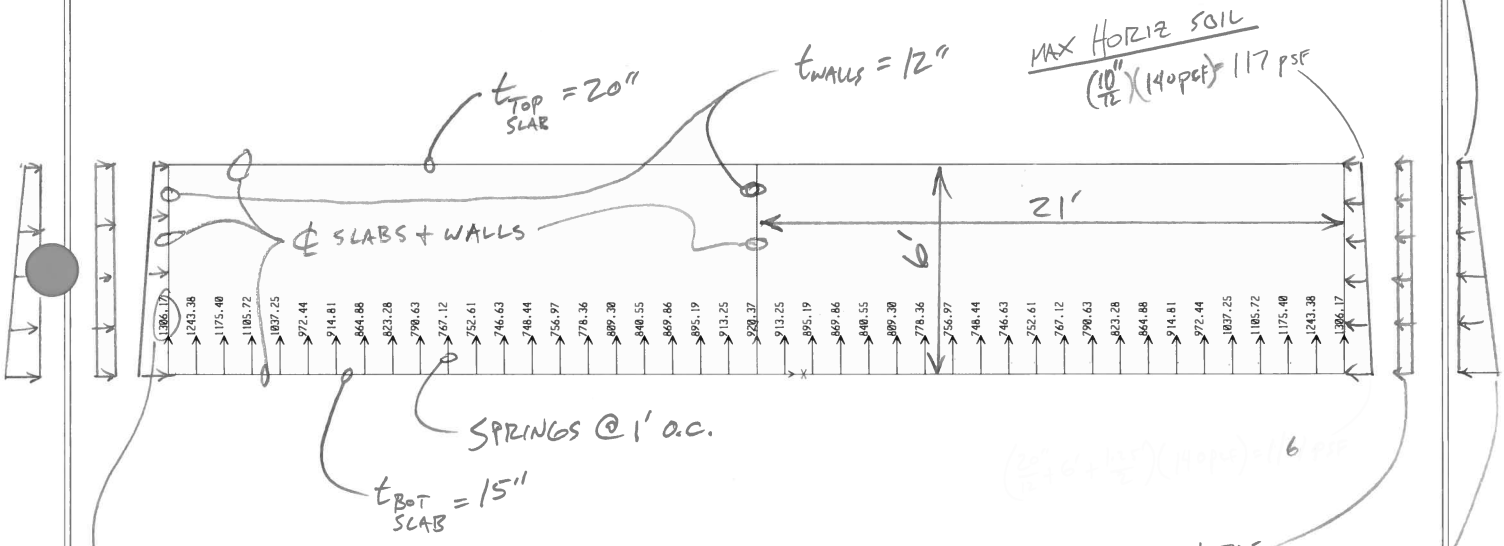

MAX BEARING PRESSURE = 1,306 psf < 2,000 psf MAX ALLOWABLE

∴ OK

FYI... $\Delta_{MAX} = 0.33''$

(2)

MAX HORIZ SOIL PRESSURE

→ INCLUDING SURCHARGE + WATER PRESSURE ON EXT WALLS

→ INCLUDING WATER VERTICAL LOAD INSIDE RCB

→ HL93 TRUCK + LANE 0.082 LANES/FT

VERTICAL WATER PRESSURE INSIDE RCB
= (6')(62.4 pcf) = 375 psf

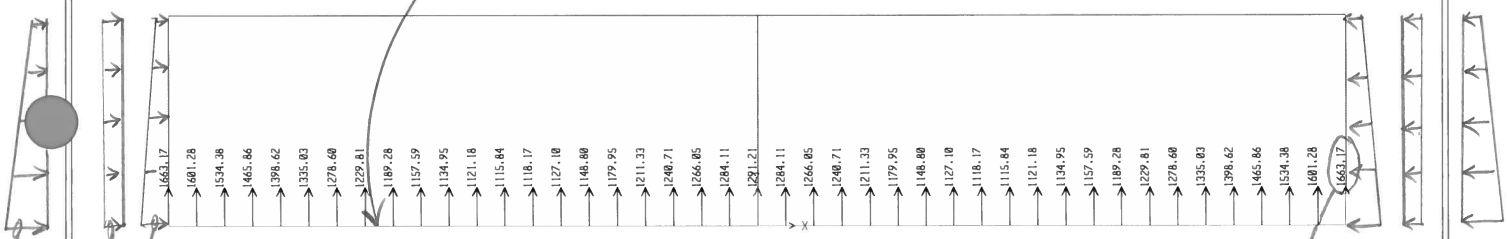

MAX SOIL PRESSURE

SURCHARGE

WATER

MAX BEARING PRESSURE = 1,663 PSF < 2,000 PSF MAX ALLOWABLE

∴ OK

FYI... $\Delta_{MAX} = 0.42''$

(3)

MIN HORIZ SOIL PRESSURE

→ NOT INCLUDING SURCHARGE + WATER PRESSURE ON EXT WALLS

→ HL93 TRUCK + LANE 0.082 LANES/FT

MIN HORIZ SOIL

$\left(\frac{10''}{12}\right)(42\,pcf) = 35\,psf$

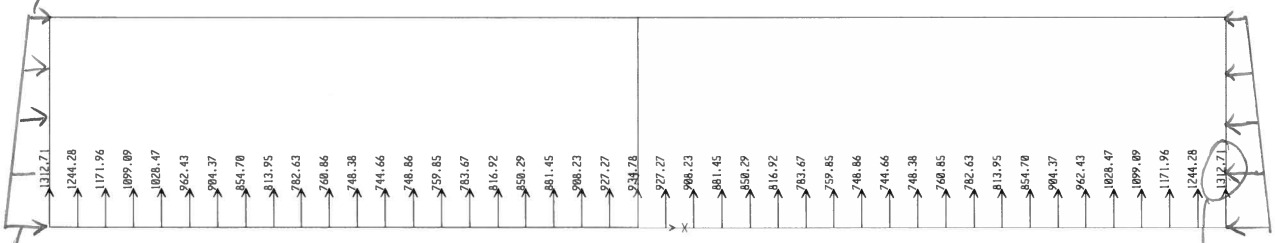

$\left(\frac{20''}{12} + 6' + \frac{1.25'}{2}\right)(42\,pcf) = 348\,psf$

MAX BEARING PRESSURE = 1,313 psf < 2,000 psf

FYI... $\Delta_{MAX} = 0.33''$

OK

(4)

MIN HORIZ SOIL PRESSURE

→ NOT INCLUDING SURCHARGE + WATER PRESSURE ON EXT WALLS

→ INCLUDES WATER VERTICAL LOAD INSIDE RCB

→ HL93 TRUCK + LANE 0.082 LANES/FT

MIN HORIZ SOIL

VERTICAL WATER PRESSURE INSIDE RCB = 375 PSF

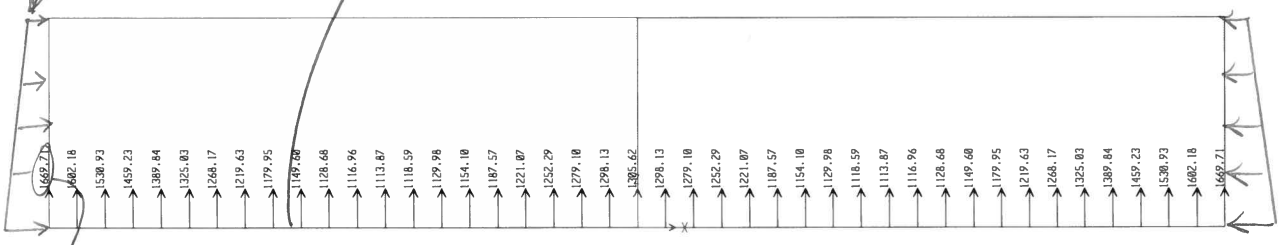

MAX BEARING PRESSURE = 1,670 PSF < 2,000 PSF ∴ OK

FYI... $\Delta_{MAX} = 0.42''$

CONTROLLING MAX BEARING PRESSURE

BOD Appendix D
Plans (Engineering Drawings)

D1: Equipment Lists

D2: Drawings

This appendix is presented under separate cover in a standalone volume. It is presented in a separate PDF file on the CD-ROM version of the Supplemental 90% submittal.

BOD Appendix E
Technical Specifications
(*on CD-ROM only*)

Supplemental 90% Specifications

Section Number	Title	New or Updated?
GENERAL		
00 01 01A	Project Title Page	Updated
09 COMPRESSOR STATION PONDS		
The following sections were added or updated to reflect design details of the onsite power generation for the planned improvements at the Evaporation Ponds.		
26 32 13.16	Natural Gas Engine Generator Set	New
26 32 13.18	Natural Gas Thermal Electric Generator Set	New
15 PARK MOABI FACILITIES		
The following sections were added or updated to reflect design details of the proposed facilities at Moabi Regional Park.		
10 14 00	Signage	Updated
13 34 19	Metal Building Systems	Updated
13 34 20	Field Office	New
22 30 00	Plumbing Equipment	Updated
26 31 00	Photovoltaic Power System	New
26 32 13.17	Diesel Engine Generators	New
26 36 23	Automatic Transfer Switches	New
41 22 13.13	Overhead Cranes	Updated
43 40 02	High Density Polyethylene Tank	Updated
43 40 15	Fiberglass Reinforced Plastic (FRP) Storage Tanks	New

PG&E

TOPOCK COMPRESSOR STATION
NEEDLES, CALIFORNIA

SUPPLEMENTAL PRE-FINAL (90%)
TECHNICAL SPECIFICATION

for the construction of the

TOPOCK GROUNDWATER REMEDIATION PROJECT

****

****

CH2M HILL

Oakland, CA

January 2015

© CH2M HILL 2015. All rights reserved.
This document and the ideas and designs incorporated herein, as an instrument of professional service, is the property of CH2M HILL and is not to be used in whole or part, for any other project without the written authorization of CH2M HILL.

Project No. 435062 Copy No. ____

TABLE OF CONTENTS

VOLUME 1

TECHNICAL SPECIFICATIONS

DIVISION 1—NOT USED

DIVISION 2—EXISTING CONDITIONS

* 02 41 00 Demolition

DIVISION 3—CONCRETE

* 03 10 00 Concrete Forming and Accessories
* 03 21 00 Reinforcing Steel
* 03 30 00 Cast-in-Place Concrete
* 03 35 00 Concrete Finishing
* 03 39 00 Concrete Curing
* 03 40 00 Precast Concrete
* 03 62 00 Nonshrink Grouting
* 03 64 23 Crack Repair Epoxy Injection Grouting

DIVISION 4—MASONRY

* 04 10 00 Mortar and Masonry Grout
* 04 30 00 Unit Masonry System

DIVISION 5—METALS

* 05 05 23 Welding
* 05 12 00 Structural Steel Framing
* 05 21 19 Open Web Steel Joist Framing
* 05 31 00 Steel Decking
* 05 41 00 Structural Metal Stud Framing
* 05 50 00 Metal Fabrications
* 05 52 00 Metal Railings
* 05 53 00 Metal Gratings

* Not Included in this Submittal

©COPYRIGHT 2015 CH2M HILL

DIVISION 6—WOOD, PLASTICS, AND COMPOSITES

*	06 10 00	Rough Carpentry
*	06 18 00	Glued-Laminated Construction
*	06 41 00	Architectural Wood Casework

DIVISION 7—THERMAL AND MOISTURE PROTECTION

*	07 11 00	Sheet Membrane Waterproofing
*	07 21 00	Thermal Insulation
*	07 26 00	Vapor Retarders
*	07 92 00	Joint Sealants

DIVISION 8—OPENINGS

*	08 11 00	Metal Doors and Frames
*	08 33 23	Overhead Coiling Doors
*	08 41 13	Aluminum-Framed Entrances and Storefronts
*	08 71 00	Door Hardware
*	08 80 00	Glazing
*	08 90 00	Louvers and Vents
		Supplement:
		Louver and Vent Schedule

DIVISION 9—FINISHES

*	09 22 36	Lath and Plastering
*	09 29 00	Gypsum Board
*	09 65 13	Resilient Base and Accessories
*	09 69 00	Access Flooring
*	09 90 00	Painting and Coating
		Supplements:
		Paint System Data Sheet (PSDS)
		Paint Product Data Sheet (PPDS)
*	09 90 05	Architectural Painting
*	09 96 35	Chemical-Resistant Coatings
		Supplement:
		Corrosion Control Assistance Form

* Not Included in this Submittal

©COPYRIGHT 2015 CH2M HILL

* 09 97 13 Steel Tank Coatings
Supplements:
Paint System Data Sheet (PSDS)
Paint Product Data Sheet (PPDS)

DIVISION 10—SPECIALTIES

10 14 00 Signage
* 10 44 00 Fire Protection Specialties
* 10 80 00 Miscellaneous Specialties

DIVISION 11—EQUIPMENT

* 11 53 00 Laboratory Equipment

DIVISION 12—NOT USED

DIVISION 13—SPECIAL CONSTRUCTION

13 34 19 Metal Building Systems
13 34 20 Field Office

DIVISIONS 14 THROUGH 20—NOT USED

DIVISION 21—FIRE SUPPRESSION

* 21 13 00 Fire Sprinkler System
* 21 24 00 Dry-Chemical Fire-Extinguishing Systems

DIVISION 22—PLUMBING

* 22 10 01 Plumbing Piping and Accessories
Supplements:
Plumbing Piping Schedule
* 22 10 01.01 Copper Tube and Fittings – Domestic Water Service Data Sheet
* 22 10 01.02 Polyvinyl Chloride Drain Waste and Vent (PVC-DWV) Pipe and Fittings Data Sheet
* 22 10 01.04 Acid-Resistant Cast Iron Pipe and Fittings Data Sheet
* 22 13 01.06 Acid-Resistant Polypropylene Waste and Vent Pipe and Fittings Data Sheet
* 22 10 01.08 Double Contained Pipe and Fittings Data Sheet

* Not Included in this Submittal

©COPYRIGHT 2015 CH2M HILL

	22 30 00	Plumbing Equipment
		Supplements:
		Instantaneous Water Heater
		Simplex, Submersible Sump Pump
		Duplex, Submersible Sump Pump
		Duplex, Column Type, Sump Pump (Acid Resistant)
		Backflow Preventers
		Plate and Frame Heat Exchangers Data Sheet
*	22 40 00	Plumbing Fixtures

DIVISION 23—HEATING, VENTILATING, AND AIR-CONDITIONING

*	23 05 93	Testing, Adjusting, and Balancing for HVAC
*	23 07 00	HVAC Insulation
*	23 23 00	Refrigerant Piping
*	23 31 13	Metal Ducts and Accessories
		Supplement:
		Ductwork Schedule
*	23 34 00	HVAC Fans
*	23 37 00	Air Outlets and Inlets
*	23 81 00	Unitary Air-Conditioning Equipment
		Supplement:
		Ductless Split System DX Indoor Units Data Sheet

DIVISIONS 24 THROUGH 25—NOT USED

DIVISION 26—ELECTRICAL

*	26 05 02	Basic Electrical Requirements
*	26 05 04	Basic Electrical Materials and Methods
*	26 05 05	Conductors
*	26 05 26	Grounding and Bonding for Electrical Systems
*	26 05 33	Raceway and Boxes for Electrical Systems
*	26 08 00	Commissioning of Electrical Systems
*	26 09 13	Power Measurement and Control
*	26 12 02	Oil-Filled Pad Mounted Transformers
*	26 13 16.02	Pad-Mounted Switchgear
*	26 14 13	Switchboards
*	26 20 00	Low-Voltage AC Induction Motors
*	26 22 00	Low-Voltage Transformers
*	26 23 00	Low-Voltage Switchgear

* Not Included in this Submittal

©COPYRIGHT 2015 CH2M HILL

*	26 24 16	Panelboards
*	26 24 19	Motor Control Centers
*	26 27 26	Wiring Devices
*	26 29 23	Low-Voltage Adjustable Frequency Drive System
	26 31 00	Photovoltaic Power System
	26 32 13.16	Natural Gas Engine Generator Set
	26 32 13.17	Diesel Engine Generators
	26 32 13.18	Natural Gas Thermal Electric Generator Set
	26 36 23	Automatic Transfer Switches
*	26 41 00	Facility Lightning Protection
*	26 42 00	Cathodic Protection
*	26 43 00	Surge Protective Device

DIVISIONS 27 THROUGH 30—NOT USED

DIVISION 31—EARTHWORK

*	31 10 00	Site Clearing
*	31 23 13	Subgrade Preparation
*	31 23 16	Excavation
*	31 23 23	Fill and Backfill
*	31 23 23.15	Trench Backfill
*	31 32 00	Soil Stabilization
*	31 41 00	Shoring

DIVISION 32—EXTERIOR IMPROVEMENTS

*	32 11 23	Aggregate Base Courses
*	32 12 16	Asphalt Paving
*	32 31 13	Chain Link Fences and Gates Supplement: Property Fence and Gates

DIVISION 33—UTILITIES

*	33 05 01.02	Ductile Iron Pipe and Fittings
*	33 05 13	Manholes
*	33 05 23.16	Utility Pipe Jacking
*	33 12 16	Water Utility Distribution Valves
*	33 12 16.29	Air and Vacuum Release Valve Assemblies
*	33 12 19	Water Utility Distribution Fire Hydrants

* Not Included in this Submittal

©COPYRIGHT 2015 CH2M HILL

*	33 16 13.14	Frac Tanks
		Supplements:
		Influent Storage Tank Nos. 1, 2, 3, 4 Equipment Data Sheets
		Conditioned Water Storage Tank Nos. 1 and 2 Equipment Data Sheet
*	33 21 13.01	Water Well Mobilization/Demobilization
*	33 21 13.03	Water Well Drilling
*	33 41 01	Storm Drain, Sanitary Sewer and Drainage Piping
*	33 46 00	Subsurface Drainage

DIVISIONS 34 THROUGH 39—NOT USED

DIVISION 40—PROCESS INTEGRATION

*	40 05 15	Piping Support Systems
		Supplements:
		Table 1: Nonchemical Areas
		Table 2: Chemical Areas
*	40 27 02	Process Valves and Operators
		Supplements:
		Manual Valve Schedule
		Self-Contained Automated Valve Schedule
		Solenoid Valve Schedule
		Electric Power Automated Valve Schedule
		Pneumatic Automated Valve Schedule
		Miscellaneous Schedules
		Control Valve Data Sheets – FCV-FW-01012 and FCV-FW-02-012
		Specialty Items Schedule
*	40 50 00	Power Plant Piping Materials
		Supplements:
		Pipe Index
		Pipe Material Specifications
		CSLF – A53 B CS, Class 125
		HALE – HDPE, SDR 11
		HLAD – HDPE, SOLVAY ELTEX TUB 124
		HSLF – HDPE, SDR 9 (FM Approved)
		LCLF – A53 B Cement Lined CS, Class 125
		PULK – CPVC, Class 150
		PVLK – PVC, Class 150
		SABD – A312 TP304/304L SS, Class 300
		SUTK – A213 Type 316L, SS Tubing

* Not Included in this Submittal

©COPYRIGHT 2015 CH2M HILL

*	40 50 10	Underground Piping
		Supplements:
		Piping Pretest Checklist
		Piping Test and Post-Test Checklist
		Power Piping Standard PP-1, Dielectric Flanged Joint
*	40 50 20	Aboveground Piping
		Supplements:
		Piping Pretest Checklist
		Status of Instruments during Pressure Test
		Piping Test and Post Test Checklist
		Power Piping Standard PP-1 – Dielectric Flanged Joint
*	40 80 01	Process Piping Leakage Testing
*	40 90 00	Instrumentation and Control for Process Systems
*	40 91 00	Instrumentation and Control Components
		Supplement:
		Instrument Schedule
*	40 91 01	PLC & HMI Applications Programming
*	40 91 02.01	I&C Analytical Measurement Components
*	40 91 02.03	I&C Flow Measurement Components
*	40 91 02.05	I&C Level Measurement Components
*	40 91 02.07	I&C Pressure Measurement Components
*	40 92 05	Programmable Logic Controller and Human Machine Interface
*	40 95 60	Telemetry System
*	40 95 80	Fiber Optic Communication System

DIVISION 41—MATERIAL PROCESSING AND HANDLING EQUIPMENT

41 22 13.13	Overhead Cranes
	Supplements:
	Remedy Produced Water Conditioning Crane Data Sheet
	Remedy Produced Water Conditioning Crane Dimension Sheet
	Remedy Produced Water Conditioning Induction Motor Data Sheet
	Construction Headquarters Workshop Building Crane Data Sheet
	Construction Headquarters Workshop Building Crane Dimension Sheet
	Construction Headquarters Workshop Building Crane Data Sheet

DIVISION 42—NOT USED

* Not Included in this Submittal

©COPYRIGHT 2015 CH2M HILL

DIVISION 43—PROCESS GAS AND LIQUID HANDLING, PURIFICATION, AND STORAGE EQUIPMENT

*	43 12 01	Compressed Air Systems
	43 40 02	High Density Polyethylene Tank
		Supplement:
		HDPE Tank Schedule
*	43 40 13	Steel Storage Tank
		Supplements:
		Steel Tank Schedule
	43 40 15	Fiberglass Reinforced Plastic (FRP) Storage Tanks

DIVISION 44—POLLUTION CONTROL EQUIPMENT

*	44 42 56.04	Submersible Well Pumps
		Supplements:
		Submersible Well Pump PMP-001 Data Sheet
		Submersible Well Pump PMP-002 Data Sheet
		Submersible Well Pump PMP-440 Data Sheet
		Submersible Well Pump PMP-442, 443 Data Sheet
		Submersible Well Pump PMP-*541, *542 Data Sheet
		Submersible Well Pump PMP-*544, *545, *543 Data Sheet
		Submersible Well Pump PMP-*546, *547, *548, *549 Data Sheet
		Submersible Well Pump PMP-*641A, *641B Data Sheet
		Submersible Well Pump PMP-441 Data Sheet
		Submersible Well Pump PMP-*540 Data Sheet
		Submersible Well Pump PMP-*640 Data Sheet
*	44 42 56.09	Non-Clog Dry-Pit Centrifugal Pumps
		Supplements:
		Influent Tank Farm, Decon Pad, Remedy Produced Water Conditioning Plant Sump Pumps Submersible Centrifugal Pump Data Sheet
		Conditioning Water Tank Farm Sump Pump Submersible Centrifugal Pump Data Sheet
*	44 42 56.10	Horizontal End Suction Centrifugal Pumps
		Supplements:
		Influent Storage Tank Recirculation Pump #1, 2, 3, 4 Pump Data Sheet
		Filter Feed Pump 1 – A Side, Filter Feed Pump 2 – A Side Data Sheet

* Not Included in this Submittal

©COPYRIGHT 2015 CH2M HILL

		Filter Feed Pump 1 – B Side, Filter Feed Pump 2 – B Side Data Sheet
		Conditioned Water Transfer Pump 1 & 2 Data Sheet
		Truck Loading Pump Data Sheet
		Electric Motor Data Sheet
*	44 42 56.15	Air Operated Diaphragm Pumps
		Supplement:
		Solids Pump Air-Operated Diaphragm Pump Data Sheet
*	44 43 13.16	Cartridge Filters
*	44 44 13.01	Chemical Metering Pumps
		Supplement:
		Caustic Feed Pump 1 and 2 Data Sheet
		Coagulant Feed Pump 1 and 2 Data Sheet
		Acid Feed Pump 1 and 2 Data Sheet
		Carbon Substrate Pumps, Well Maintenance Reagent Pumps Data Sheet

DIVISIONS 45 THROUGH 49—NOT USED

VOLUME 2

DRAWINGS

END OF SECTION

* Not Included in this Submittal

©COPYRIGHT 2015 CH2M HILL

SECTION 10 14 00
SIGNAGE

PART 1 GENERAL

1.01 SUMMARY

A. Section includes interior signs.

B. Allowances: Include under provisions of Section 01 20 00, Price and Payment Procedures: Allowances (to be completed). Allowance includes furnishing and installing interior signs.

1.02 SUBMITTALS

A. Section 01 33 00, Submittal Procedures (to be completed): Submittal procedures.

B. Action Submittals: Submit the following:

1. Shop Drawings:
   a. Indicate sign styles, lettering font, foreground and background colors, locations, overall dimensions of each sign.
   b. Schedule of all signage required for the Work, indicating signage type location, and other information to demonstrate compliance with the Contract Documents.
   c. Fabrication and erection information for each type of signage
   d. Valve schedule for small-diameter valves, in accordance with this Section.
   e. Mounting and Installation Data:
      1) Drawings of and information on anchorages and accessory items.
      2) Submit location template drawings for items supported or anchored to permanent construction.
      3) Coordinate mounting position, method, and proposed mounting accessories and fasteners with actual Project conditions. Indicate required mounting accessories on plan drawings showing locations of required exit signs based on measurements taken at the Site. Show final location and identify type of mounting surface for each exit sign. Coordinate location of exit signs for non-interference with other Work and as required by authorities having jurisdiction.

©COPYRIGHT 2015 CH2MHILL

2. Product Data: Copies of manufacturer’s technical data, including catalog information and specifications, for each product specified.
3. Samples:
   a. Each color and finish of exposed materials and accessories required for signage.
   b. Samples Signage: Submit two full size signs illustrating type, style, letter font, and colors specified; method of attachment.
   c. Engineer's review of Samples will be for color and texture only. Compliance with other requirements is Contractor's responsibility.

C. Informational Submittals: Submit the following:

1. Manufacturer's Instructions:
   a. Templates for anchorages to be installed in concrete or masonry.
   b. Manufacturer's instructions and recommendations for support and foundations of signs installed outdoors.

1.03 QUALITY ASSURANCE

A. Perform Work in accordance with State of California standard.

B. Maintain one copy of each document on site.

1.04 QUALIFICATIONS

A. Manufacturer: Company specializing in manufacturing Products specified in this section with minimum three years documented experience.

1.05 DELIVERY, STORAGE, AND HANDLING

A. Section 01 60 00, Product Requirements (to be completed): Product storage and handling requirements.

B. Package signs, labeled in name groups.

1.06 ENVIRONMENTAL REQUIREMENTS

A. Section 01 60 00, Product Requirements (to be completed): Environmental conditions affecting products on site.

B. Do not install signs when ambient temperature is lower than recommended by manufacturer.

C. Maintain this minimum temperature during and after installation of signs.

©COPYRIGHT 2015 CH2MHILL

PART 2 PRODUCTS

2.01 GENERAL

A. Details shown or indicated for signage, such as alpha-numeric and text type representation, letter spacing, designs of borders, and other graphic features, are generic and intended only to establish text, general positions, and symbols.

B. Colors shall be brilliant, distinctive shades, matching the safety colors specified in ANSI Z535.1 and OSHA 1910.144.

2.02 INTERIOR SIGNS

A. Manufacturers:

1. APCO Graphics.
2. ASI Sign Systems.
3. Daktronics, Inc.
4. FFI Group, Inc.
5. Mills Manufacturing.
6. Unicor.

2.03 COMPONENTS (TO BE COMPLETED)

A. Engraved Signs: Laminated colored plastic; lettering engraved through face to expose core color:

1. Face Color: [Clear.] [wood grain, [walnut] [_____].] [_____.] [Color as selected.]
2. Core Color: [_____].
3. Total Thickness: [1/16] [1/8] inch.
4. Height: [2] [3] [_____] inches.
5. Edges: [Square.] [Beveled.] [Radiused.]
6. Character Font: [Helvetica.] [_____.]

B. Sand Blasted Signs: Acrylic high gloss plastic; letters sand blasted to dull sheen:

1. Color: [Clear.] [Solid color.] [Color as selected.]
2. Total Thickness: [1/8] [_____] inch.
3. Height: [2] [3] [_____] inches.
4. Edges: [Square.] [Beveled.] [Radiused.]
5. Character Font: [Helvetica.] [_____.]

©COPYRIGHT 2015 CH2MHILL

C. Silk Screened Signs: Letters [_____] inch high silk screened onto plastic surface:

1. Sign Color: [Clear.] [Solid color.] [Color as selected.]
2. Character Color: [Contrasting] [_____] color.
3. Total Thickness: [1/8] [_____] inch.
4. Height: [2] [3] [_____] inches.
5. Edges: [Square.] [Beveled.] [Radiused.]
6. Character Font: [Helvetica.] [_____.]

D. Injection Molded [Cast] Signs: [Acrylic plastic] [Cast aluminum]:

1. Sign Color: [Clear.] [Solid color.] [Color as selected.]
2. Character Color: [Contrasting color.] [Ground satin surface.] [_____.]
3. Total Thickness: [1/8] [_____] inch.
4. Height: [2] [3] [_____] inches.
5. Edges: [Square.] [Beveled.] [Radiused.]
6. Character Font: [Helvetica.] [_____.]

E. Raised Letter Signs, Base Material: [Clear] [Solid color] acrylic plastic:

1. Total Thickness: [1/8] [_____] inch.
2. Height: [2] [3] [_____] inches.
3. Edges: [Square.] [Beveled.] [Radiused.]
4. Character Font: [Helvetica.] [_____.]

F. Raised Character Size and Style: Acrylic plastic, character adhered to base material:

1. Character Color: [Black.] [_____.]
2. Character Thickness: [1/8] [_____] inch.
3. Height: [1] [1-1/2] [_____] inch.
4. Edges: [Square.] [Beveled.] [Radiused.]
5. Character Font: [Helvetica.] [_____.]
6. Character Case: [Upper] [and] [lower] case.

G. Individual Graphics, Material: [Clear] [Solid color] acrylic plastic:

1. Thickness: [1/8] [_____] inch.
2. Height: [2] [3] [_____] inches.
3. Edges: [Square.] [Beveled.] [Radiused.]
4. Character Color: [Black.] [_____.]
5. Character Font: [Helvetica.] [_____.]

©COPYRIGHT 2015 CH2MHILL

6. Character Case: [Upper] [and] [lower] case.

H. Graphic Style: [Handicapped type.] [_____.]

2.04 ACCESSORIES

A. Tape Adhesive: Double sided tape, permanent adhesive.

PART 3 EXECUTION

3.01 EXAMINATION

A. Section 01 30 00, Administrative Requirements (to be completed): Verification of existing conditions before starting work.

3.02 INSTALLATION

A. Install signs after doors surfaces are finished, in locations as directed by Engineer.

B. Center sign on door surface, level.

3.03 SCHEDULES

A. Office Door Signs: Individual Helvetica letters, 1 inch high, white color, identifying room name indicated on drawing schedule.

B. Service Room Signs: Plaque signs, 2 inches high, black face color, white core color, “UTILITY ROOM”, “SERVICE ROOM”, and “ELECTRICAL ROOM”; at each respective room location.

C. Rest Room Door Graphic: 6 inches high, “male” and “female” graphic image; black color, located on each rest room door.

D. Workshop Building:

1. Two 10-inches high by 14-inches wide fiberglass-reinforced plastic signs stating “CAUTION 6,000 LB. LOAD LIMIT ON BRIDGE CRANE.” Locate on two interior room walls.
2. Two 10-inches high by 14-inches wide fiberglass-reinforced plastic signs stating “CAUTION FLOOR LOAD NOT TO EXCEED 500 LBS./SQ. FT.” Locate on two interior room walls.

©COPYRIGHT 2015 CH2MHILL

3. Four 10-inches high by 14-inches wide fiberglass-reinforced plastic signs stating “CAUTION CEILING LOAD NOT TO EXCEED 50 LBS./SQ. FT.” Locate one on top handrail at top of each stairwell and one on wall of building above interior room ceiling (one each side of building).

E. MW-20 Bench Carbon Amendment Building: Two 10-inches high by 14-inches wide fiberglass-reinforced plastic signs stating “CAUTION FLOOR LOAD NOT TO EXCEED 500 LBS./SQ. FT.” Locate on two interior room walls.

END OF SECTION

©COPYRIGHT 2015 CH2MHILL

SECTION 13 34 19
METAL BUILDING SYSTEMS

PART 1 GENERAL

1.01 SUMMARY

A. Section includes pre-engineered, shop fabricated structural steel building frame supporting an internal bridge crane; insulated metal wall panels and sloped roof system on rigid insulation including, soffits, gutters and downspouts, exterior doors, windows, rigid vent, overhead door, and louvers.

B. Related Sections:

1. Division 3, Concrete and Concrete Work.
2. Section 07 92 00, Joint Sealants.
3. Section 08 11 00, Metal Doors and Frames.
4. Section 08 33 23, Overhead Coiling Doors.
5. Section 08 71 00, Door Hardware.
6. Section 08 90 00, Louvers and Vents.
7. Section 09 90 00, Painting and Coating.
8. Section 31 23 16, Excavation.
9. Section 31 23 23, Fill and Backfill.
10. Section 41 22 13.13, Overhead Cranes.

1.02 REFERENCES

A. The following is a list of standards which may be referenced in this section:

1. American Architectural Manufacturers Association (AAMA): WDMA/CSA 101/I.S.2 A440, NAFS (North American Fenestration Standard Specification for Windows, Doors and Skylights.
2. American Institute of Steel Construction (AISC):
   a. S335, Specification for Structural Steel Buildings Allowable Stress Design, and Plastic Design.
   b. S342L, Load and Resistance Factor Design Specification for Structural Steel Buildings.
   c. S344L, Metric Load and Resistance Factor Design Specification for Structural Steel Buildings.
3. American Welding Society (AWS):
   a. A2.4, Standard Symbols for Welding, Brazing, and Nondestructive Examination.
   b. D1.1, Structural Welding Code, Steel.

©COPYRIGHT 2015 CH2M HILL

4. ASTM International (ASTM):
   a. A36/A36M, Standard Specification for Carbon Structural Steel.
   b. A123/A123M, Standard Specification for Zinc (Hot-Dip Galvanized) Coatings on Iron and Steel Products.
   c. A153/A153M, Standard Specification for Zinc Coating (Hot-Dip) on Iron and Steel Hardware.
   d. A307, Standard Specification for Carbon Steel Bolts and Studs, 60 000 PSI Tensile Strength.
   e. A325, Standard Specification for Structural Bolts, Steel, Heat Treated, 120/105 ksi Minimum Tensile Strength.
   f. A490, Standard Specification for Heat-Treated Steel Structural Bolts, 150 ksi Minimum Tensile Strength.
   g. A500/A500M, Standard Specification for Cold-Formed Welded and Seamless Carbon Steel Structural Tubing in Rounds and Shapes.
   h. A501, Standard Specification for Hot-Formed Welded and Seamless Carbon Steel Structural Tubing.
   i. A529/A529M, Standard Specification for High-Strength Carbon-Manganese Steel of Structural Quality.
   j. A572/A572M, Standard Specification for High-Strength Low-Alloy Columbium-Vanadium Structural Steel.
   k. A653/A653M, Standard Specification for Steel Sheet, Zinc-Coated (Galvanized) or Zinc-Iron Alloy-Coated (Galvannealed) by the Hot-Dip Process.
   l. A792/A792M, Standard Specification for Steel Sheet, 55% Aluminum-Zinc Alloy-Coated by the Hot-Dip Process.
   m. C1107/C1107M, Standard Specification for Packaged Dry, Hydraulic-Cement Grout (Nonshrink).
   n. C1371, Standard Test Method for Determination of Emittance of Materials Near Room Temperature Using Portable Emissometers.
   o. C1549, Standard Test Method for Determination of Solar Reflectance Near Ambient Temperature Using a Portable Solar Reflectometer.
   p. E84, Standard Test Method for Surface Burning Characteristics of Building Materials.
   q. E96/E96M, Standard Test Methods for Water Vapor Transmission of Materials.
   r. E408, Standard Test Methods for Total Normal Emittance of Surfaces Using Inspection-Meter Techniques.
   s. E903, Standard Test Method for Solar Absorptance, Reflectance, and Transmittance of Materials Using Integrating Spheres.
   t. E1918, Standard Test Method for Measuring Solar Reflectance of Horizontal and Low-Sloped Surfaces in the Field.

©COPYRIGHT 2015 CH2M HILL

u. E1980, Standard Practice for Calculating Solar Reflectance Index of Horizontal and Low-Sloped Opaque Surfaces.
v. E1996, Standard Specification for Performance of Exterior Windows, Curtain Walls, Doors and Impact Protective Systems Impacted by Windborne Debris in Hurricanes.

5. Green Seal (GC): 03, Anti-Corrosive Paints.
6. Metal Building Manufacturers Association (MBMA): Low Rise Building Systems Manual.
7. The Society for Protective Coatings (SSPC):
   a. Steel Structures Painting Manual.
   b. Paint 20, Zinc-Rich Primers (Type I - Inorganic and Type II - Organic).
8. Underwriters Laboratories Inc. (UL): Building Materials Directory.
9. U.S. Environmental Protection Agency: ENERGY STAR - ENERGY STAR Voluntary Labeling Program.

1.03 SYSTEM DESCRIPTION

A. Single span rigid frame.

B. Bay Spacing: As shown on Drawings.

C. Primary Framing: Rigid Frame solid web framing consisting of tapered or uniform depth rafters rigidly connected to tapered or uniform depth.

D. Secondary Framing: Girts, furring channels, angles, plates, bracing, and other secondary framing members for panel supports and anchorage.

E. Endwall Framing: Corner posts, endposts and rake beams.

F. Purlins: Zee-shaped; depth as required; simple span or continuous span as required for design.

G. Girts: Zee- or Cee-shaped; depth as required; simple span or continuous span as required for design.

H. Wind Bracing: Portal, torsional, diagonal bracing or diaphragm in accordance with manufacturer’s standard design practices; utilizing rods, angles, and other members, with minimum yield strengths as required for design.

I. Primary Frame Flange Bracing: Attached from purlins or girts to the primary framing, minimum yield strength as required for design.

J. Wall Panel Penetration Framing: Zee- or Cee-shaped; depth as required.

©COPYRIGHT 2015 CH2M HILL

K. Wall System: Preformed, prefinished, interlocking, factory sealant/gasket applied, factory foamed in place polyurethane between two sheets of formed and seamed minimum 26 gauge steel sheets with finishes selected from manufacturer's standard selection. Panels of 3-inch thickness yielding R-22 insulation value at 75 degrees F mean temperature.

1. Basis of Design: Varco Pruden Buildings, Thermalclad Reveal Wall Panel.

L. Roof System: Preformed, prefinished, factory applied sealant and field seamed standing seam minimum 24 gauge panels, finished as selected from manufacturer's standard selection, supported by proprietary clips to formed structural steel deck. Roof panel clips to be sized to allow for rigid insulation under roof panels, thickness as shown on Drawings. Solar Reflectance Index (SRI) to be 16, minimum.

1. Basis of Design: Varco Pruden Buildings, SLR II Roof.

M. Roof Slope: As shown on Drawings.

1.04 DESIGN REQUIREMENTS

A. Applicable Building Code: California Building Code (CBC) 2013, International Building Code (IBC) 2012, and ASCE 7-10. See Drawings for loading information.

B. Roof Live Load: 30 psf.

C. Wind Load: CBC Section 1609: See General Notes on Drawings.

D. Seismic Loads: CBC Section 1613: See General Notes on Drawings.

E. Foundation: See General Notes on Drawings.

F. Floor Live Loads: See General Notes on Drawings.

G. Dead Loads: Include the weight of all indicated permanent construction and a collateral dead load of 5 psf.

H. If Drawings indicate Photovoltaic (PV) Solar Panels presence on building roof, PV solar panel support framing, clip attachments, and hardware to be designed and details by PV solar panel manufacturer, but connection details and loads to be coordinated between PV Solar Panel manufacturer and metal

©COPYRIGHT 2015 CH2M HILL

roof system/building manufacturer so that building is designed properly by building manufacturer to support these loads.

1. Design for 10 psf maximum Dead Load of Photovoltaic (PV) Solar Panel and support framing for worst case downward load combinations.
2. Ignore PV Solar Panel and support framing Dead Loads in calculating load combination for uplift loads.

I. If Drawings indicate bridge crane supported from building, design building to support moving bridge crane loads while meeting AISC Design Guidelines on drift and deflection limitations. Bridge crane load rating is listed on Drawings. Bridge crane, crane runway beams, runway stops, brackets, hangers, bracing, and their attachments to building structural steel to be designed and detailed by Bridge crane manufacturer per Section 41 22 13.13, Overhead Cranes, but loading and connections details to be coordinated between bride crane manufacturer and building manufacturer so that building is designed properly for drift and deflection limitations.

J. Design wall and roof panel system to withstand specified loads with deflection of 1/240th of span, maximum.

K. Design the building frame (rigid frames, portal frames, X-bracing, and other lateral resistant systems) such that the maximum lateral drift shall be H/400 under wind and seismic loadings.

L. Anchor Bolts: Furnish design criteria for anchor bolts to resist the loads induced by the design loads on the structure.

M. Design members to support mechanical and electrical equipment indicated.

N. Permit movement of components without buckling, failure of joint seals, undue stress on fasteners or other detrimental effects, when subject to temperature range of 120 degrees F.

O. Size and fabricate wall and roof systems free of distortion or defects detrimental to appearance or performance.

P. Thermal resistance of Calculated Wall System: R-Value of 22.

Q. Thermal Resistance of Calculated Roof System: Base on thickness of insulation shown on Drawings.

©COPYRIGHT 2015 CH2M HILL

1.05 PERFORMANCE REQUIREMENTS

A. Conform to applicable CBC code for submission of design calculations, reviewed shop and erection drawings, and as required for acquiring permits.

B. Cooperate with regulatory agency or authority and provide data as requested authority having jurisdiction.

C. Provide components of each type from one manufacturer compatible with adjacent materials.

1.06 SUBMITTALS

A. Section 01 33 00, Submittal Procedures (to be completed): Submittal procedures.

B. Design Data: Provide detailed design criteria and calculations, with State of California professional engineer seal and signature, for pre-engineered metal building frame system including loads to foundation.

C. Shop Drawings: Show building layout, indicate assembly dimensions, locations of structural members, connections, attachments, openings, cambers, loads, and wall and roof system dimensions, panel layout, general construction details, anchorages and method of anchorage, method or installation and framing anchor bolt settings, sizes, and locations from datum, and foundation loads; indicate welded connections with AWS A2.4 welding symbols; indicate net weld lengths; provide State of California Professional Engineer seal and signature on all shop drawings.

D. Product Data: Submit data on profiles, component dimensions, fasteners, and performance characteristics.

E. Manufacturer's Instructions: Submit preparation requirements and anchor bolt placement.

F. Certification: Manufacturer certification that the building conforms to the contract documents and manufacturer’s standard design procedures.

G. Erection Drawings: Indicate members by label, assembly sequence, and temporary erection bracing.

H. Color Samples: For selection of colors.

I. Specimen Warranty.

©COPYRIGHT 2015 CH2M HILL

1.07 CLOSEOUT SUBMITTALS

A. Section 01 70 00, Execution and Closeout Requirements (to be completed): Closeout procedures.

B. Project Record Documents: Record actual locations of concealed components and utilities.

1.08 QUALITY ASSURANCE

A. Perform Work in accordance with AISC S335, AISC S342L, AISC S344L, and MBMA Low Rise Building Systems Manual.

B. Design structural components, develop shop drawings, and perform shop and site work under direct supervision of a Professional Engineer experienced in design of this Work and licensed in the State of California.

C. Design data, calculations and Shop Drawings submitted for review shall bear the seal of a Professional Engineer licensed in the State of California.

D. Insulation Installed in Concealed Locations Surface Burning Characteristics:

1. Rigid or Batt Insulation: Maximum 25/450 flame spread/smoke developed index when tested in accordance with ASTM E84.

1.09 QUALIFICATIONS

A. Manufacturer: Company specializing in manufacturing products specified in this section with minimum 5 years' documented experience and certified by ICC-IAS (International Code Council – International Accreditation Service).

B. Erector: Company specializing in performing Work of this section with minimum 5 years' experience and approved by manufacturer. Design structural components, develop shop drawings, and perform shop and site work under direct supervision of Professional Engineer experienced in design of this Work and licensed in State of California.

1.10 PRE-INSTALLATION MEETINGS

A. Section 01 30 00, Administrative Requirements (to be completed): Pre-installation meeting.

B. Convene minimum 2 weeks prior to commencing work of this section.

©COPYRIGHT 2015 CH2M HILL

1.11 WARRANTY

A. Section 01 70 00, Execution and Closeout Requirements (to be completed): Product warranties and product bonds.

B. Furnish 5 year manufacturer warranty for materials and workmanship of pre-engineered building systems and components.

C. Furnish 20 year warranty to include coverage for exterior pre-finished surfaces color coat against chipping, cracking or crazing, blistering, peeling, chalking, or fading.

D. Furnish 20 year warranty for weather tightness of building enclosure elements after installation.

PART 2 PRODUCTS

2.01 PRE-ENGINEERED BUILDINGS

A. Manufacturer:

1. Varco-Pruden Buildings.
2. Or as approved.

2.02 COMPONENTS - FRAMING

A. Structural Steel Plate, Bar, Sheet, and Strip for Use in Bolted and Welded Constructions: ASTM A572, A1011, A529, or A36, as applicable.

B. Structural Steel Material for Secondary Structural Members: ASTM A1011, with minimum yield strength of 57,000 psi.

C. Hot-Rolled Steel Shapes: ASTM A36 OR A992 as applicable; with minimum yield strengths of 36 or 50 ksi.

D. Structural Bolts and Nuts Used with Primary Framing: High strength, ASTM A325.

E. Bolts and Nuts Used with Secondary Framing Members: ASTM A325.

F. Sag Angles and Bridging: Steel angles, with minimum yield strength of 36,000 psi.

G. Anchor Bolts: ASTM A307 Grade A, unprimed.

©COPYRIGHT 2015 CH2M HILL

H. Welding Materials: AWS D1.1; type required for materials being welded.

I. Fabrication: Fabricate according to manufacturer's standard practice.

1. Fabricate structural members made of welded plate sections by jointing the flanges and webs by continuous automatic submerged arc welding process.
2. All welding operators and processes shall be qualified in accordance with the American Welding Society "Structural Welding Code," AWS D1.1.
3. Field connections. Prepare members for bolted field connections by making punched, drilled, or reamed holes in the shop.

J. Shop Coating: Shop coat all structural steel members (except rods) using one coat of manufacturer's standard primer (SSPC Paint 20, Red Oxide), after cleaning of oil, dirt, loose scale and foreign matter.

K. Shop Coating for Rods: Galvanize rods to ASTM A123; minimum 1.25 ounces per square foot galvanized coating.

L. Finish Coating: Finish coat all structural steel members (except rods) per Section 09 90 00, Painting and Coating.

M. Component Identification: Mark all fabricated parts, either individually or by lot or group, using an identification marking corresponding to the marking shown on the Shop Drawings, using a method that remains visible after shop coating.

N. Nonshrink Grout: Specified in Section 03 62 00, Nonshrink Grouting.

2.03 COMPONENTS - WALL AND ROOF SYSTEM AND MISCELLANEOUS MATERIALS

A. Galvanized Steel Sheet for Roof and Wall Covering Exterior Sheets, Trim and Flashing: ASTM A653, with minimum yield strength of 50,000 psi. Coating designation G-90.

B. Insulation:

1. Type IV extruded polystyrene from insulation.
2. Basis of Design: The Dow Chemical Company Styrofoam Brand Tongue and Groove Insulation.

C. Joint Seal Gaskets: Manufacturer's standard type.

©COPYRIGHT 2015 CH2M HILL

D. Panel Fasteners:

1. For Roof Panels: Stainless steel-capped carbon steel fasteners with integral sealing washer.
2. For Wall Panels: Coated carbon steel.
3. Color of exposed fastener heads to match the wall panel finish.
4. Concealed Fasteners: Self-drilling type, of size as required.
5. Provide fasteners in quantities and location as required by the manufacturer.

E. Bituminous Paint: Asphaltic type.

F. Plastic Parts: Glass fiber reinforced resin or thermoformed ABS.

1. ABS: Minimum 1/8 inch thick.
2. Color: Manufacturer’s standard color.

G. Sealants, Mastics and Closures: Manufacturer’s standard type.

1. Provide at roof panel end laps, side laps, rake, eave, transitions and accessories as required to provide a weather-resistant roof system; use tape mastic or gunnable sealant at side laps and end laps.
2. Provide at wall panel rakes, eaves, transitions and accessories.
3. Provide at door and louver frames, and other penetrations.
4. Closures: Formed to match panel profiles; closed cell elastic material, manufacturer’s standard color.
5. Tape Mastic: Pre-formed butyl rubber-based, non-hardening, non-corrosive to metal; white or light gray.
6. Gunnable Sealant: Nonskinning synthetic elastomer based material; gray or bronze.

H. Metal Mesh: Galvanized steel wire, woven.

I. Roof Curbs: Welded units fabricated for shingled installation with roof panels; minimum 18 gauge (1.22 mm) Galvalume coated steel, with welds cleaned and treated with protective coating compatible with the Galvalume substrate.

1. Top of curbs horizontal with 1-1/2 inch (38 mm) perimeter flange.
2. Curb walls insulated with 1-1/2 inch (38 mm), 3 pcf (48 kg/cu m) density rigid glass fiber insulation.
3. Water Diversion: Integral 4 inches (100 mm) high by full length cricket on upslope side.
4. Exposed curb flanges pre-drilled for correct fastener locations.

©COPYRIGHT 2015 CH2M HILL

5. Upslope and downslope curb flanges with integral welded inside and outside cell closures compatible with the roof panel profile.
6. Curb Framing: Mounted on secondary structural members and installed from the top; compatible with the thermal expansion and contraction properties of the roof on which it is used.
7. Opening Size: As indicated on Drawings.
8. Acceptable Curbs for standing seam Roof Panels: Seamed in type.

J. Flashing and Trim: Match material and color of adjacent components. Provide trim at rakes, including peak and corner assemblies, high and low eaves, corners, bases, framed openings and as required or specified to provide weathertightness and a finished appearance.

2.04 ROOF PANEL COMPONENTS

A. Standing Seam Roof Panels: 16 inch wide net coverage, with 2 inch high major ribs formed at the panel side laps, formed for field seaming using electrically operated seaming machine.

1. Material: See Galvanized Steel Sheet for Roof and Wall Coverings in Article Components - Wall and Roof System and Miscellaneous Materials, Paragraph A.
2. Thickness: 24 gauge minimum.
3. Side Laps: Two factory-formed interlocking ribs, with one weather sealed joint, mechanically field-seamed into place to form a double-fold 360 degree seam. Factory applied sealant for field seaming.
4. Length: Continuous from eave to ridge where possible.
5. End Laps, where Required: 6 inches wide, located at a support member. Stagger at least one purlin spacing.
6. The roof shall be tested and certified to meet Underwriters Laboratories uplift rating; UL90.
7. Panel to Roof Deck Attachments: Standing seam roof clips with movable tabs which interlock with seamed standing seam roof panel ribs and provide for 1-5/8 inches of panel movement in either direction from center of clip to compensate for thermal effects.
8. Panel to Plywood Attachments: Standing seam roof clips with movable tabs which interlock with seamed standing seam roof panel ribs and provide for 1-5/8 inches of panel movement in either direction from center of clip to compensate for thermal effects.
9. Finish: Kynar 500 or Hylar 5000 pre-painted finish on exterior surface, wash coat on interior surface. Color selected by Owner from manufacturer’s full line with SRI (Solar Reflectance Index) of 16 minimum.

©COPYRIGHT 2015 CH2M HILL

2.05 WALL PANEL COMPONENTS

A. 42 inches wide net panel coverage, steel faced, shop assembled, factory foamed polyurethane insulated panel units.

1. Material: See Galvanized Steel Sheet for Roof and Wall Coverings in Article Components - Wall and Roof System and Miscellaneous Materials, Paragraph A.
2. Sheet Thickness: 26 gauge minimum.
3. Panel Side Connection: Double tongue-and-groove interlocking design with factory applied sealant.
4. Length: Continuous from sill to eave.
5. Cut panels straight and as shown on Drawings; provide standard panel closures at exposed cut panel ends.
6. Finish: Kynar 500 or Hylar 5000 pre-painted finish on exterior surface, wash coat on interior surface. Color selected by Owner from manufacturer’s full line.

2.06 METAL FINISHES

A. Fluoropolymer Coating: Manufacturer's standard two-coat, thermo-cured, full-strength 70 percent "Kynar 500" coating consisting of a primer and a minimum 0.75 mil dry film thickness with a total minimum dry film thickness of 0.9 mil and 30 percent reflective gloss when tested in accordance with ASTM D523.

1. Durability: Provide coating that has been field-tested under normal range of weathering conditions for minimum of 20 years without significant peel, blister, flake, chip, crack, or check in finish; without chalking in excess of No. 8 in accordance with ASTM D4214; and without fading in excess of five NBS units.

2.07 COMPONENTS - METAL DOORS AND FRAMES

A. Doors and Frames: Specified in Section 08 11 00, Metal Doors and Frames.

2.08 COMPONENTS - OVERHEAD DOORS

A. Overhead Doors: Specified in Section 08 33 23, Overhead Coiling Doors.

B. Frame: Formed steel sections braced to building frame specified in Section 05 50 00, Metal Fabrications.

©COPYRIGHT 2015 CH2M HILL

2.09 COMPONENTS - WINDOWS

A. Windows: Frame system to be metal building manufacturers thermally broken extruded aluminum, 2-1/2 inch sightline frame, clear anodized finish. Construct windows to the requirements of AAMA/WDMA/CSA1-1/ I.S.2 A440, Class CW.

1. Basis of Design: Wintech Series S250 commercial aluminum window.

B. Glass and Glazing: Specified in Section 08 80 00, Glazing.

2.10 FABRICATION - FRAMING

A. Fabricate members in accordance with AISC Specification for plate, bar, tube, or rolled structural shapes.

B. Anchor Bolts: Formed with straight shank with headed bolt at embedded end, assembled with template for casting into concrete.

C. Provide framing for door, window, louver, and ventilator openings.

2.11 FABRICATION - WALL AND ROOF SYSTEM ACCESSORIES

A. Soffit panels: Minimum 24 gauge metal thickness, 12 inch net wide panel, V crimped, perforated profile, male/female edges.

1. Basis of Design: Varco Pruden Buildings FP-12 Soffit.

B. Girts/Purlins: Rolled formed structural shape to receive siding and roofing panels.

C. Internal and External Corners: Same material thickness and finish as adjacent material, profile shop cut and factory mitered to required angles. Back brace mitered internal corners with 12 gauge thick sheet.

D. Expansion Joints: Same material and finish as adjacent material where exposed, manufacturer's standard brake formed type, of profile to suit system.

E. Flashings, Closure Pieces, Fascia, Infills, and Caps: Same material and finish as adjacent material, profile to suit system.

F. Fasteners: To maintain load requirements and weather tight installation, same finish as cladding, noncorrosive type.

©COPYRIGHT 2015 CH2M HILL

G. Ventilator: Sheet steel, galvanized, rotary design, 16 inch nominal size, designed for 24 inch wide roof deck ridge opening.

H. Wall Louvers: See Section 08 90 00, Louvers and Vents.

2.12 FABRICATION - GUTTERS AND DOWNSPOUTS

A. Fabricate of same material and finish as roofing metal.

B. Form gutters and downspouts of standard profile and size to collect and remove water. Fabricate with connection pieces.

C. Form sections in maximum possible lengths. Hem exposed edges. Allow for expansion at joints.

D. Fabricate support straps of same material and finish as roofing metal, color as selected.

2.13 FACTORY FINISHING

A. Framing Members: Clean, prepare, and shop prime. Do not prime surfaces to be field welded.

B. Galvanizing for Nuts, Bolts and Washers: ASTM A153/A153M.

C. Interior Surfaces of Wall and Roof Components and Accessories: See Articles Roof Panel Components and Wall Panel Components, respectively.

D. Exterior Surfaces of Wall and Roof Components and Accessories: See Articles Roof Panel Components and Wall Panel Components, respectively.

PART 3 EXECUTION

3.01 EXAMINATION

A. Section 01 30 00, Administrative Requirements (to be completed): Coordination and project conditions.

B. Verify foundation, floor slab, mechanical and electrical utilities, and placed anchors are in correct position.

3.02 ERECTION - FRAMING

A. Erect framing in accordance with AISC Specification, manufacturer’s instructions, erection drawings, and other erection documents.

©COPYRIGHT 2015 CH2M HILL

B. Provide for erection and wind loads. Provide temporary bracing, shoring, blocking, and bridging to maintain structure plumb and in alignment until completion of erection and installation of permanent bracing. Locate braced bays as indicated on Drawings.

C. Set column base plates with non-shrink grout to achieve full plate bearing.

D. Do not field cut or alter structural members without approval of Architect/ Engineer.

E. After erection, prime welds, abrasions, and surfaces not shop primed.

3.03 ERECTION - WALL AND ROOFING SYSTEMS

A. Exercise care when cutting prefinished material to ensure cuttings do not remain on finish surface.

B. Fasten cladding system to structural supports, aligned level and plumb.

C. Locate panel end laps over supports. End laps minimum 2 inches. Place side laps over bearing.

D. Locate insulated wall panel end joints, with closure pieces designed for use, over continuous supports that conform to the metal building manufacturer's requirements. Place panel side joints over bearing.

E. Install expansion joints where indicated on Drawings.

F. Install sealant and gaskets to prevent weather penetration.

3.04 ERECTION - GUTTER AND DOWNSPOUTS

A. Rigidly support and secure components. Joint lengths with formed seams sealed watertight. Flash and seal gutters to downspouts.

B. Apply bituminous paint on surfaces in contact with dissimilar materials.

C. Slope gutters minimum 1/4 inch per foot.

D. Connect downspouts as indicated on Drawings.

3.05 ERECTION - ACCESSORIES

A. Install door frame, door, overhead door, window and glass, and louvers.

©COPYRIGHT 2015 CH2M HILL

B. Seal wall and roof accessories watertight and weather tight with sealant in accordance with Section 07 92 00, Joint Sealants.

3.06 ERECTION TOLERANCES

A. Section 01 40 00, Quality Requirements (to be completed): Tolerances.

B. Framing Members: 1/4 inch from level; 1/8 inch from plumb.

C. Siding and Roofing: 1/8 inch from indicated position.

END OF SECTION

©COPYRIGHT 2015 CH2M HILL

SECTION 13 34 20
FIELD OFFICE

PART 1 GENERAL

1.01 SUMMARY

A. Section includes pre-engineered, shop manufactured trailers for field offices.

B. Related sections:

1. Division 3, Concrete and Concrete Work.
2. Division 22, Plumbing.
3. Division 26, Electrical.

1.02 REFERENCES

A. The following is a list of standards which may be referenced in this section:

1. State of California Building Code.
2. U.S. Department of Housing and Urban Development Manufactured Home Construction and Safety Standards.

1.03 SUBMITTALS

A. Section 01 33 00, Submittal Procedures (to be completed): Submittal procedures.

B. Design Data: Provide detailed design criteria and calculations, with State of California professional engineer seal and signature, for trailers including loads to foundation.

C. Shop Drawings: Show trailer layout, indicate assembly dimensions, openings, loads, and wall and roof system dimensions, general construction details, anchorages and method of anchorage, and foundation loads; indicate welded connections with AWS A2.4 welding symbols; indicate net weld lengths; provide State of California professional engineer seal and signature on all shop drawings.

D. Product Data: Submit data on profiles, component dimensions, fasteners, and performance characteristics.

E. Manufacturer's Instructions: Submit preparation requirements and anchor bolt placement.

©COPYRIGHT 2015 CH2M HILL

F. Certification: Manufacturer certification that the trailer conforms to the contract documents and manufacturer's standard design procedures.

1.04 DESIGN REQUIREMENTS

A. Applicable Building Code: California Building Code (CBC) 2013.

1.05 PERFORMANCE REQUIREMENTS

A. Conform to applicable CBC for submission of design calculations, reviewed shop and erection drawings, and as required for acquiring permits.

B. Cooperate with regulatory agency or authority and provide data as requested authority having jurisdiction.

PART 2 PRODUCTS

2.01 FIELD OFFICE FURNISHINGS AND CONSTRUCTION

A. Field Office and Furnishings:

1. Utilities and Services: Provide the following:
   a. Telephone wiring and termination points as requested by Owner.
   b. Computer network and related facilities as required by Owner.
   c. Utilities and related facilities for lighting and maintaining temperature.
   d. Piping and appurtenances for fire protection sprinklers as required by Engineer.
   e. Water and Sewerage for potable water and sewerage requirements by Engineer.
2. Furnishings:
   a. Conference Facilities: Provide conference area with conference table and chairs sufficient for twenty people. Conference facilities and furnishings shall be provided with suitable utilities, lighting, and temperature controls prior to the first progress meeting, unless otherwise approved by Engineer.
   b. Other furnishings required by Owner.
3. Provide on field office an exterior identification sign displaying Pacific Gas and Electric as company name. Maximum size of sign shall be 4 feet by 8 feet. Sign shall be suitable for outdoor use for the duration of the Project.

©COPYRIGHT 2015 CH2M HILL

B. Manufacturer:

1. Williams-Scotsman.
2. Or equal.

C. Construction:

1. As required by Contractor and sufficient for Project meetings.
2. Vendor Specifications:
   a. Size for triple-wide trailer is 64-feet L by 24-feet W by 8-feet H.
   b. Interior Finish: Paneled or vinyl covered walls, carpet floors, T-grid ceiling, private offices.
   c. Electric: Fluorescent ceiling lights, breaker panel 3-100 amp.
   d. Windows/Door: Horizontal sliding windows, metal door with standard lock or deadbolt.
   e. Heating and Cooling: Central HVAC or separate split units as needed.
   f. Exterior Finish/Frame: Wood siding, I-beam frame, removable hitch available on request.
3. Field Office Ingress and Egress:
   a. Two doors for ingress and egress for each field office unit, each with landing, stairs, and railing conforming to building codes in effect at the Site.
   b. Landing and stairs shall have slip-resistant walking surfaces, and be metal, pressure-treated wood, fiberglass, or concrete.
   c. Railing shall be metal, wood, or fiberglass.
   d. Doors will be retrofitted with site-specific locks upon delivery to the Site.
4. Provide in Triple Wide Field Office: Two private restrooms including two lavatories, two toilets, medicine cabinets with mirror, soap dispensers, and paper towel holders. Provide restrooms with appropriate electric ventilation fan.

PART 3 EXECUTION

3.01 EXECUTION

A. Installation:

1. Install field offices in accordance with Laws and Regulations.
2. Install materials and equipment, including pre-fabricated structures, in accordance with manufacturer’s instructions.

©COPYRIGHT 2015 CH2M HILL

3.02 MAINTENANCE AND REMOVAL

A. Maintenance: Clean and maintain field offices as required.

B. Removal:

1. Do not remove field offices until after Substantial Completion of the entire Work, unless otherwise approved by Engineer.
2. Remove field offices and sheds and restore areas prior to final inspection.

END OF SECTION

©COPYRIGHT 2015 CH2M HILL

SECTION 22 30 00
PLUMBING EQUIPMENT

PART 1 GENERAL

1.01 REFERENCES

A. The following is a list of standards which may be referenced in this section:

1. American Gas Association (AGA).
2. American Society of Heating, Refrigerating & Air-Conditioning Engineers, Inc. (ASHRAE): 90.1, Energy Standard for Buildings Except Low-Rise Residential Buildings.
3. American Society of Mechanical Engineers (ASME).
4. American Society of Sanitary Engineering (ASSE):
   a. 1013, Performance Requirements for Reduced Pressure Principle Backflow Preventers and Reduced Pressure Fire Protection Backflow Preventers.
   b. 1015, Performance Requirements for Double Check Backflow Prevention Assemblies and Double Check Backflow Fire Protection Assemblies.
5. American Water Works Association (AWWA):
   a. C510, Double Check Valve Backflow Prevention Assembly.
   b. C511, Reduced-Pressure Principle Backflow Prevention Assembly.
   c. C550, Protective Interior Coatings for Valves and Hydrants.
6. ASTM International (ASTM):
   a. A48/A48M, Standard Specification for Gray Iron Castings.
   b. D4101, Standard Specification for Polypropylene Injection and Extrusion Materials.
7. FM Global (FM).
8. Food and Drug Administration (FDA).
9. Foundation for Cross-Connection Control and Hydraulic Research at University of Southern California (FCCHR): Manual of Cross-Connection Control.
10. International Code Council (ICC): International Plumbing Code (IPC).
11. National Electrical Code (NEC).
12. National Electrical Manufacturers Association, (NEMA): MG 1, Motors and Generators.
13. NSF International (NSF).
14. Underwriters Laboratories Inc. (UL).

©COPYRIGHT 2015 CH2M HILL

1.02 SUBMITTALS

A. Action Submittals:

1. Manufacturer's product data.
2. Seismic anchorage and bracing drawings and cut sheets, as required.

B. Informational Submittals:

1. Seismic anchorage and bracing calculations as required.
2. Component and attachment testing seismic certificate of compliance as required.

1.03 SPECIAL GUARANTEE

A. Where note below, provide manufacturer's extended guarantee in writing with Owner named as beneficiary. Special guarantee shall provide for correction, or at the option of the Owner, removal and replacement of products found defective during the stated period after date of Substantial Completion.

PART 2 PRODUCTS

2.01 WATER HEATERS

A. IWH-1 - Instantaneous Electric Water Heater:

1. Description: UL listed, tankless with removable cover, replaceable heating element, immersion-type thermostat, replaceable inlet filter, and flow regulator.
2. Capacity: See data sheet at end of section.
3. Manufacturers:
   a. Chronomite Laboratories, Inc.
   b. EEMAX, Inc.
   c. Weben-Jarco Inc.

2.02 SUBMERSIBLE CENTRIFUGAL SUMP PUMPS

A. Simplex, Submersible Sump Pump:

1. Description:
   a. Type: Simplex, heavy-duty, nonclog, close-coupled submersible centrifugal sewage ejector pump.
   b. Volute: Cast iron, foot mounted.
   c. Impeller: Cast iron, double shroud, fully enclosed.

 ©COPYRIGHT 2015 CH2M HILL

d. Wear Plates: Brass.
e. Motor Enclosure: Cast iron, Buna-N O-ring seals with corrosion-resistant exterior finish.
f. Motor: Continuous-duty, built-in thermal overload protection.
g. Shaft Seals: Tandem, mechanical type.
h. Shaft: Stainless steel.
i. Bearings: Permanently lubricated, ball bearing with B-10 bearing life of 17,500 hours.
j. Electrical: Inner seal chamber with two moisture sensing probes and attached power and control cables, with length, voltage, and power requirements as indicated on data sheet at end of section.
k. Controls:
1) Circuit Breakers: Motor rated.
2) Motor Starters: Magnetic with thermal overload protection device.
3) Level Control: Polypropylene-encapsulated mechanical float switch.
4) Leak Detection: Pump seal alarm circuit.

2. Capacity: See data sheet at end of section.
3. Manufacturers:
a. Hydromatic Pumps.
b. Paco Pump.
c. Weil Pump Company, Inc.
d. Zoeller.

B. Duplex, Submersible Sump Pump:

1. Construction:
a. Impeller and Volute: Nonclog design, ASTM A48/A48M, Class 30, cast iron capable of passing 2-inch spherical solid.
b. Electrical: Water-resistant, UL listed and CSA approved electrical power cord.
c. Motor: Sealed, oil-filled, NEMA B design with winding thermal sensors.
d. Bearings and Shaft: Upper and lower thrust bearings, solid Type 303 stainless steel shaft.
e. Seals: Two mechanical seals, carbon rotating seal face and ceramic stationary seal face, and lower seal failure sensor and warning device.

©COPYRIGHT 2015 CH2M HILL

2. Controller:
   a. Control Panel: Fabricated steel, NEMA 4 enclosure, door disconnect switch, and bear UL listing mark. Components shall bear UL recognized marking. Wiring, schematics, and workmanship shall comply with NEC and UL.
3. Wiring and Conduit: Minimum of MTH, 600V rated, 18-gauge with 90 degrees C rating, in accordance with NEC standards. Wire sized in accordance with NEC standards.
4. Motor Protection: Magnetic motor starter, across the line type, UL listing mark, under voltage and over voltage protection with manual reset button mounted in panel door.
5. Level Sensors (Duplex): Automatic pump cycle and alternation. Polypropylene encapsulated mechanical level sensors for pump on, pump off, and override (standby pump on). Additional level sensor shall activate audible-visual panel mounted light and horn. Panel mount, push-to-silence button for deactivating audible alarm.

C. Duplex, Column Type, Sump Pump (Acid-Resistant):

1. Construction:
   a. Impeller and Volute: PVC construction with stainless steel inserts.
   b. Motor Support Bracket: Cast iron, epoxy coated.
   c. Shaft: Stainless steel with PVC sleeve.
   d. Bearings: Lower and intermediate ceramic bearings with vapor seals. Upper bearing shall be external and allow shaft adjustment.
   e. Column: Ribbed PVC construction.
   f. Strainer: PVC construction with 1/4-inch diameter holes.
   g. Motor: Vertical mounted, C-face, open drip-proof (ODP), premium-efficiency, ball bearing design.
2. Sump and Cover Plate: Cylindrical design, PVC construction, vaportight with subplates and openings.
3. Controller:
   a. Float: Adjustable, rising rod, PVC construction, fume-tight design. High-level indicator light, dry contacts for remote alarm, alarm horn, and alarm acknowledge.
   b. Control Panel: NEMA 4 enclosure with fusible disconnect switch, HOA (HAND/OFF/AUTO) selector switch. Panel mounted indicator lights for “power on” and “pump off.”
   c. Motor Protection: Magnetic motor starter with overload protection.
4. Capacity: See data sheet at end of section.
5. Manufacturer: Vanton.

©COPYRIGHT 2015 CH2M HILL

2.03 BACKFLOW PREVENTERS

A. Double Check Backflow Preventer (3/4 Inch through 2 Inches):

1. Description:
   a. Regulatory Compliance: AWWA C510, CSA B64.5, FCCHR of USC Section 10, ASSE 1015, ICC (IPC).
   b. Valve Body: Bronze.
   c. End Connections: Threaded, NPT.
   d. Maximum Working Pressure: 175 psi (350 psi test).
   e. Temperature Range: 32 degrees to 140 degrees F.
   f. Shutoff Valve: Full port, resilient seated, bronze ball valve with bronze ball valve test cock.
   g. TBD. Inlet Strainer: Bronze wye strainer, 40-mesh perforated, Type 304 stainless steel.
2. Sizes: See data sheet at end of section.
3. Manufacturers and Products:
   a. Febco; Model 850.
   b. Watts Regulator Company; Model 709.

B. Double Check Backflow Preventer (2-1/2 Inches through 10 Inches):

1. Description:
   a. Regulatory Compliance: AWWA C510, CSA B64.5, FCCHR of USC Section 10, ASSE 1015, ICC (IPC).
   b. Valve Body: Ductile or cast iron, Class 125, epoxy-coated (FDA approved).
   c. End Connections: Flanged.
   d. Maximum Working Pressure: 175 psi (350 psi test).
   e. Temperature Range: 32 to 140 degrees F.
   f. Shutoff Valve: Nonrising stem, resilient seated gate valve with bronze ball valve test cock.
   g. Inlet Strainer: Cast-iron wye strainer, Class 125 flanged, fusion epoxy AWWA C550 coated, perforated stainless steel screen (1/16-inch perforations on 2-1/2 inches to 4 inches; 1/8-inch perforation on 6 inches to 10 inches), threaded cap plug blowout opening (if required by local codes).
2. Sizes: See data sheet at end of section.
3. Manufacturers and Products:
   a. Febco; Model 850.
   b. Watts Regulator Company; Model 709.

©COPYRIGHT 2015 CH2M HILL

C. Reduced Pressure Backflow Preventers (1/4 Inch through 1/2 Inch):

1. Description:
   a. Regulatory Compliance: AWWA C511, CSA B64.4, ASSE 1013, ICC (IPC), FM, USC-UL.
   b. Valve Body: Bronze.
   c. End Connections: Threaded, NPT.
   d. Maximum Working Pressure: 175 psi (350 psi test).
   e. Temperature Range: 32 to 140 degrees F.
   f. Shutoff Valve: Full port, resilient seated, bronze ball valve with bronze ball valve test cock.
   g. Accessories: Drain line air gap fitting.
2. Sizes: See data sheet at end of section.
3. Manufacturer and Product: Conbraco Industries; Series 20-400.

D. Reduced-Pressure Backflow Preventers (3/4 Inch through 2 Inches):

1. Description:
   a. Regulatory Compliance: AWWA C511, CSA B64.4, FCCHR of USC Section 10, ASSE 1013, ICC (IPC).
   b. Valve Body: Bronze.
   c. End Connections: Threaded, NPT.
   d. Maximum Working Pressure: 175 psi (350 psi test).
   e. Temperature Range: 32 to 140 degrees F.
   f. Shutoff Valve: Full port, resilient seated, bronze ball valve with bronze ball valve test cock.
   g. Inlet Strainer: Bronze wye strainer, 40-mesh perforated, Type 304 stainless steel (if required by local codes).
   h. Accessories: Drain line air gap fitting.
2. Sizes: See data sheet at end of section.
3. Manufacturers and Products:
   a. Febco; Model 860.
   b. Watts; Model 909.

E. Reduced Pressure Backflow Preventers (2-1/2 Inches Through 10 Inches):

1. Description:
   a. Regulatory Compliance: AWWA C511, CSA B64.4, FCCHR of USC Section 10, ASSE 1013, IAPMO (UPC), SBCCI.
   b. Valve Body: Ductile or cast iron, Class 125, epoxy-coated (FDA approved).
   c. End Connections: Flanged.
   d. Maximum Working Pressure: 175 psi (350 psi test).

©COPYRIGHT 2015 CH2M HILL

e. Temperature Range: 32 to 140 degrees F.
f. Shutoff Valve: Nonrising stem, resilient seated gate valve with bronze ball valve test cock.
g. Inlet Strainer: Cast-iron wye strainer, Class 125 flanged, fusion epoxy AWWA C550 coated, perforated stainless steel screen (1/16-inch perforations on 2-1/2 inches to 4 inches; 1/8-inch perforation on 6 inches to 10 inches), threaded cap plug blowout opening (if required by local codes).
h. Accessories: Drain line air gap fitting.

2. Sizes: See data sheet at end of section.
3. Manufacturers and Products:
   a. Febco; Model 860.
   b. Watts; Model 909.

2.04 ENVIRONMENTAL ENCLOSURES

A. For Backflow Preventers 3/4 Inch to 3 Inches:

1. Description:
   a. Enclosure shall be factory-assembled unit providing heat and accessibility to the system backflow preventers. Unit shall meet the requirements of NFPA and ASSE for testing of the backflow preventer. Design to protect to minus 30 degrees F. Unit shall be suitable for concrete pad mounting.
   b. Adjustable thermostat shall control electric heaters/cables. Set thermostat to maintain 40 degrees F.
   c. Fiberglass construction, 1-inch-thick, factory applied unicellular nonwicking insulation, minimum R-value of 8, hinged and lockable access doors. Designed for exterior installation.
2. Heating Capacity:
   a. 3/4-Inch to 1-1/2-Inch: 60-watt heater, 120 volt, single-phase.
   b. 2-Inch: 90-watt heater, 120 volt, single-phase.
   c. 3-Inch: 1500-watt heaters, 120 volt, single-phase.
3. Manufacturers and Products:
   a. Hot Box; Series HB, Model TBD.
   b. Watts; Model TBD.

B. For Backflow Preventers 4 inches to 10 Inches:

1. Description:
   a. Enclosure shall be factory-assembled unit providing heat and accessibility to the system backflow preventers. Unit shall meet the requirements of NFPA and ASSE for testing of the backflow

©COPYRIGHT 2015 CH2M HILL

preventer. Design to protect to minus 30 degrees F. Unit shall be suitable for concrete pad mounting.

b. Adjustable thermostat shall control electric heaters. Set thermostat to maintain 40 degrees F.

c. Reinforced 18-gauge aluminum construction, factory applied unicellular nonwicking insulation, minimum R-value of 8, hinged and lockable access doors. Designed for exterior installation.

d. Verify unit length, width, and height with manufacturer based on actual backflow preventer provided.

2. Heating Capacity:

a. 4 Inches: One 2.0-kW heater, 120 volt, single-phase.

b. 6 Inches and 8 Inches: Two 1.5-kW heaters, 120 volt, single-phase.

c. 10 Inches: Two 2.0-kW heaters, 120 volt, single-phase.

3. Manufacturers and Products:

a. Hot Box; Series HB, Model TBD.

b. Watts; Model TBD.

2.05 PLATE HEAT EXCHANGERS

A. Acceptable Manufacturers:

1. Alfa Laval.
2. Tranter.
3. Paul Mueller Company, Inc.

B. Design Requirements:

1. Design, fabricate, and test equipment in accordance with the BPVC, Section VIII, Division 1.
2. Design equipment per the requirements in Plate and Frame Heat Exchangers Data Sheet.
3. Thermal design by manufacturer.
4. Design heat exchangers to allow for the future addition of plates for an increased hot-side heating capacity of 50 percent.
5. Design plate and carrying box to permit the removal of any plate in the plate pack without the need to remove any other plates.
6. Plate and frame heat exchangers to include:

a. Fixed end cover.

b. Multiple plates.

c. Movable end cover.

d. Carrying bars and compression bolts.

e. Gasket for heat transfer area and portholes.

©COPYRIGHT 2015 CH2M HILL

f. One-piece molded gaskets.
g. Plate pack covered with metal shroud in accordance with OSHA standards.
h. Provide lifting lugs as required for installation and maintenance.

7. Paint heat exchanger using manufacturer's standard painting system.

C. Materials: Fabricate using the materials specified in Plate and Frame Heat Exchangers Data Sheet.

D. Fabrication:

1. Permanently mark plates to identify plate material.
2. Completely fit-up and assemble heat exchangers in manufacturer's shop.
3. Provide permanently attached equipment identification nameplate. At a minimum include the following:
   a. Equipment model number.
   b. Serial number.
   c. Materials of construction.
   d. Number of plates provided and maximum number of plates.

E. Source Quality Control:

1. Factory Testing:
   a. Hydrostatic Testing:
      1) Test exchangers at the manufacturing facility in accordance with BPVC Section VIII, Division 1.
      2) Use water that does not contain more than 100 ppm of chlorine.
      3) Drain and thoroughly dry exchangers immediately after testing. When complete drainage is impossible, flush with water containing not more than 5 ppm chlorides. The use of alcohol or alternate flushing media requires prior review and approval by Engineer.
      4) Provide Contractor a minimum of 2 weeks' written notice prior to testing.

2.06 BOOSTER PUMP SKID SYSTEM

A. The Contractor shall furnish and install a factory built, above grade, skid mounted, water booster pumping system. The pumping system shall be complete with all the necessary internal piping, pumps, motors, valves,

©COPYRIGHT 2015 CH2M HILL

control, and other necessary appurtenances installed on a fabricated steel base as shown on the plans and specified herein.

B. Manufacturers:

1. FLO-PAK, a unit of Patterson Pump Company.
2. G&L Pumps, a Goulds Pumps, ITT Industries Company.
3. Or as approved.

C. Structural Support for Water Booster Pumping System:

1. The pumping system shall be built on a structural steel base.
2. The base shall provide adequate structural supports for the pumps, motors, piping and all other internal components of the station.
3. The structural steel base shall be designed with such rigidity that the base, when lifted, will not deflect more than one inch per 180 inches of length or width.
4. The base shall be of the open channel design and shall be filled with concrete upon installation.

D. Design Requirements:

1. Pumps shall be close-coupled end suction, centrifugal pumps
2. The pumps shall be of the back pullout design, single stage, and capable of being serviced without disturbing piping connections.
3. Design Conditions:

	PMP-*101A	**PMP-*101B**
Design Flow (GPM)	110	110
Design TDH (Ft.)	162	162
Maximum Operating RPM	3500	3500
Efficiency @ Design (%)	61%	61%
Minimum Motor HP	10	10

4. The pump volute case shall be machined from ASTM A48, Class 30 cast iron. Pumps shall be designed for a maximum shaft deflection of 0.002 inch at the seal face.

©COPYRIGHT 2015 CH2M HILL

5. Impellers shall be precision cast and dynamically balanced and shall be of the enclosed type, and keyed to the shaft. The impellers shall have annular pressure reducing clearance with impeller balance holes to reduce axial thrust. Impeller material shall be ASTM B584 Bronze.
6. The pumps shall have a replaceable ASTM B505-954 bronze steel shaft sleeve and shall cover the liquid area under the seal.
7. The pump shall have a mechanical seal of carbon vs. silicon carbide construction with seal water flush line.
8. The pumps shall be rated for a minimum of 175 psi working pressure. Casing shall have taped holes on the suction and discharge to accommodate gauges, fittings, and drain ports.
9. Each Pump shall be protected with a Thermal Purge Valve mounted on the pump casing. Contractor is to field route 1/4-inch tubing from each Purge valve to the nearest floor drain prior to start-up of the equipment.
10. Pump Motors:
    a. Motor enclosures shall be TEFC - Totally Enclosed Fan-cooled.
    b. Motors shall have grease lubricated, ball bearings.
    c. Motors shall be designed to operate in 40 degrees C ambient conditions while exhibiting a temperature rise not to exceed 80 degrees C.
    d. Motor horsepower rating shall be sufficient to operate the pump at any point on the pump’s head-capacity curve without overloading the nameplate horsepower rating of the motor, regardless of service factor.
    e. The motor shall have a service factor of 1.15. The service factor shall be reserved for variations in voltage and frequency.
11. Piping:
    a. System headers shall be Schedule 10, Type 304 stainless steel with grooved connections at the suction and discharge headers.
    b. Headers shall be machine welded or by ASME Section 9 certified welders with smooth water ways with no pipe protruding into the header.
    c. Systems using extruded mechanically pulled fittings will not be allowed.
    d. The pumping system shall be furnished with groove/flange adapters at the suction and discharge connection to allow for connection to a 150-pound flanged pipe. The housing shall be manufactured from ASTM A536 ductile iron or ASTM A47 malleable iron.

©COPYRIGHT 2015 CH2M HILL

12. Pump Isolation Valves:
    a. Butterfly Valves: Isolation valves 2 inches and larger shall be butterfly type rated for 250 psi working pressure. Valve body shall be lug style. Valves shall be of the resilient seat type. The stem shall be one piece. The body shall be cast iron, with a nylon coated, ductile iron disc, stainless steel stem, and EPDM seat. Valves shall be equipped with lever operator and 10-degree increment throttling plate.
    b. Ball Valves: Isolation valves 2 inches and smaller shall be ball type. Ball valves shall be two-piece, full port design. The valve body, ball and stem manufactured from Type 316 stainless steel. The valve must have a blowout proof stem and adjustable packing nut. Valve must be rated to a minimum of 1,000 psi WOG nonshock.
13. Pressure Reducing Check Valves:
    a. The valves shall be hydraulically operated, single diaphragm-actuated, globe or angle pattern with a built in check valve feature.
    b. The valves shall consist of three major components: the body, with seat installed; the cover, with bearings installed; and the diaphragm assembly.
    c. The diaphragm assembly shall be the only moving part and shall form a sealed chamber in the upper portion of the valve, separating operating pressure from line pressure.
    d. Packing glands and/or stuffing boxes are not permitted and there shall be no pistons operating the main valve or pilot controls.
    e. No separate chambers shall be allowed between the main valve cover and body. Valve body and cover shall be of ductile iron. No fabrication or welding shall be used in the manufacturing process.
    f. The valves shall contain a resilient, synthetic rubber disc, with a rectangular cross-section contained on three and one-half sides by a disc retainer and forming a tight seal against a single removable seat insert. No O-ring type discs (circular, square, or quad type) shall be permitted as the seating surface.
    g. The disc guide shall be of the contoured type to permit smooth transition of flow and shall hold the disc firmly in place. The disc retainer shall be of a sturdy one-piece design capable of withstanding opening and closing shocks. It must have straight edge sides and a radius at the top edge to prevent excessive diaphragm wear as the diaphragm flexes across this surface. No hourglass-shaped disc retainers shall be permitted and no V-type or slotted type disc guides shall be used.

©COPYRIGHT 2015 CH2M HILL

h. The diaphragm assembly containing a nonmagnetic Type 303 stainless steel stem with sufficient diameter to withstand high hydraulic pressures shall be fully guided at both ends by a bearing in the valve cover and an integral bearing in the valve seat. No center guides shall be permitted.

i. The stem shall be drilled and tapped in the cover end to receive and affix such accessories as may be deemed necessary. The diaphragm assembly shall be the only moving part and shall form a sealed chamber in the upper portion of the valve, separating operating pressure from line pressure. The flexible, nonwicking, FDA approved diaphragm shall consist of nylon fabric bonded with synthetic rubber compatible with the operating fluid.

j. The center hole for the main valve stem must be sealed by the vulcanized process or a rubber grommet sealing the center stem hole from the operating pressure. The diaphragm must withstand a Mullins Burst Test of a minimum of 600 psi per layer of nylon fabric and shall be cycle tested 100,000 times to ensure longevity. The diaphragm shall not be used as the seating surface. The diaphragm shall be fully supported in the valve body and cover by machined surfaces which support no less than one-half of the total surface area of the diaphragm in either the fully opened or fully closed position. The main valve seat and the stem bearing in the valve cover shall be removable.

k. The lower bearing of the valve stem shall be contained concentrically within the seat and shall be exposed to the flow on all sides to avoid deposits. To ensure proper alignment of the valve stem, the valve body and cover shall be machined with a locating lip. No "pinned" covers to the valve body shall be permitted. Cover bearing, disc retainer, and seat shall be made of the same material.

l. All necessary repairs and/or modifications other than replacement of the main valve body shall be possible without removing the valve from the pipeline.

m. The valve manufacturer shall warrant the valve to be free of defects in material and workmanship for a period of 3 years from date of shipment, provided the valve is installed and used in accordance with all applicable instructions. Electrical components shall have a 1 year warranty.

n. The pressure reducing pilot control shall be a direct-acting, adjustable, spring-loaded, normally open, diaphragm valve designed to permit flow when controlled pressure is less than the spring setting.

©COPYRIGHT 2015 CH2M HILL

o. The pilot control is held open by the force of the compression on the spring above the diaphragm and it closes when the delivery pressure acting on the underside of the diaphragm exceeds the spring setting.

p. The pilot control system shall include a fixed orifice. No variable orifices shall be permitted. The pilot control shall have a second downstream sensing port which can be utilized to install a pressure gauge.

14. Hydro-Pneumatic Tank:
    a. Provide a 185-gallon, 200 psi rated ASME bladder type tank for periods of low water usage.
    b. Tank shall be the full acceptance type with an NSF approved bladder.
    c. The bladder shall be removable and replaceable, made of butyl rubber.
    d. The tank shall be manufactured and designed for 100 percent draw down. Tank shall be of a upright vertical configuration with integral support stand. Four vertical clips shall be welded to the tank support for secure vertical mounting. Fill tube shall be designed to allow the tank to be fully pre-charged before shipment. Tank shall be equipped with a 1/4-inch air fill valve and 0 to 200 psi gauge mounted on tank. Manufacturer shall include a steel frame too protect the air valve and gauge from damage during shipment and installation.
15. Controls:
    a. The control panel shall be rated for 208 volt, three-phase electrical service.
    b. All components (disconnects, transformers, and control devices, and components) shall be installed in the control panel in a manner so as to provide the minimum wire bending clearances per NEC.
    c. The entire assembly shall be wired in accordance with the National Electrical Code (NFPA70).
    d. The controller shall be Underwriters Laboratories (UL) 508 listed, and the control panel enclosure shall carry the UL label for Industrial Control Panels.
    e. All control voltage include power required for cooling fans, pilot lights, etc. shall be 24V dc. 110 volt will not be acceptable.
    f. Controls shall be housed in a NEMA Type 3R enclosure.
    g. Enclosures shall be fabricated from Type 304 stainless steel.
    h. The enclosure shall feature a seamless, polyurethane door seal and body gutter for moisture and dust protection.

©COPYRIGHT 2015 CH2M HILL

16. Power Distribution:
    a. A nonfusible main disconnect with through-the-door operator shall be provided.
    b. Branch circuit protection for each pump shall be provided by padlockable, motor starter protectors.
    c. A 5 amp, 24V dc power supply complete with battery back-up shall be provided for control power.
17. Pressure Gauges:
    a. System suction and discharge pressure gauges shall be provided.
    b. Pressure gauges shall have a 4-inch face.
    c. Pressure gauges shall be turret style. Case material shall be stainless steel with clear acrylic faces.
    d. The gauge shall be bottom connected and accept a 1/4-inch NPT female thread. Combination pressure gauge range and scale graduations shall be in psi and feet of water.
    e. The gauge shall be complete with both isolating and vent valves, and shall be so arranged as to easily vent air and facilitate gauge removal.
    f. Pressure gages shall be NSF 61 certified.
18. Pressure Transmitters:
    a. The system manufacturer shall provide pressure transmitters to monitor suction and discharge pressure and to provide a means of control for the system.
    b. The pressure transmitter shall be of Type 304 stainless steel construction with a sensing element of 17-4 PH stainless steel.
    c. The pressure transmitter shall have the following features:
        1) UL listed.
        2) Greater than 10,000,000 pressure cycles minimum (cycle life).
    d. Operating temperature of minus 15 to 85 degrees C.
    e. 4 to 20 mA output.
    f. Repeat Accuracy of less than 0.1 percent of the measuring range.
    g. Reverse polarity, short circuit and overload protection.
    h. All tubing used in conjunction with the pressure transmitter shall be 1/4-inch Type L, soft copper tubing rated for 250 psi working pressure. All tubing shall be NSF 61 certified.
19. Low Level Float:
    a. For applications where suction is being taken from a ground storage tank, a low level float switch shall be provided by the system manufacture for installation by the installing contactor to protect the pumps from low suction conditions.
    b. Float switch shall be UL listed and mercury free.

©COPYRIGHT 2015 CH2M HILL

PART 3 EXECUTION

3.01 INSTALLATION

A. Install, arrange, and connect equipment as shown on Drawings and in accordance with manufacturer's recommendations.

3.02 FIELD QUALITY CONTROL

A. Pumps: Do not hydrostatic test pumps with mechanical seals.

B. Startup:

1. In accordance with Section 01 91 14, Equipment Testing and Facility Startup (to be completed later), and Section 23 05 93, Testing, Adjusting, and Balancing for HVAC.
2. Piping Systems: Verify that flushing, cleaning, and testing has been completed prior to startup.

3.03 SUPPLEMENTS

A. Supplements listed below, following "End of Section," are a part of this Specification.

1. Instantaneous Water Heater Data Sheet.
2. Simplex, Submersible Sump Pump Data Sheet.
3. Duplex, Submersible Sump Pump Data Sheet.
4. Duplex, Column Type, Sump Pump (Acid Resistant) Data Sheet.
5. Backflow Preventers Data Sheet.
6. Plate and Frame Heat Exchangers Data Sheet.

END OF SECTION

©COPYRIGHT 2015 CH2M HILL

Instantaneous Water Heater					
Tag Number	**Flow Rate (gpm)**	**Temperature Rise (Degrees F)**	**Power (kW)**	**Voltage**	**Manufacturer and Model Number**
WH-01	0.5	40	3.0	120V/1ph	Chronomite, Model S-30L
WH-02	0.5	63	4.6	208V/1ph	Chronomite, Model S-46L
WH-03	1.0	41	6.0	208V/1ph	Chronomite, Model S-60I
WH-04	1.0	48	7.0	208V/1ph	Chronomite, Model S-70I
WH-05	1.0	54	8.0	208V/1ph	Chronomite, Model S-80I
WH-06	1.0	61	9.0	208V/1ph	Chronomite, Model S-90I

©COPYRIGHT 2015 CH2M HILL

Simplex, Submersible Sump Pump						
Tag Number	**Flow Rate (gpm)**	**Pressure (feet head)**	**Motor (hp)**	**Motor Speed (rpm)**	**Power (volts/phase)**	**Manufacturer, Model No.**
SP-01	30	21	1/3	1750	120V/1 pH	Weil, 1-1/4” Series 1400
SP-02	50	25	1/2	1750	120V/1 pH	Weil, 1-1/2” Series 1410
SP-03	35	10	1/4	1550	120V/1 pH	Hydromatic, Model SHEF25
SP-04	30	14	1/3	1550	120V/1 pH	Hydromatic, Model SHEF33
PMP-103	30	35	1	3450	120V/1 pH	Zoeller, Model 140

©COPYRIGHT 2015 CH2M HILL

Duplex, Submersible Sump Pump

Sump Pump:

Tag Number	Flow Rate (gpm)	Pressure (feet head)	Motor (hp)	Motor Speed (rpm)	Power (volts/phase)	Manufacturer, Model No.
SP-05				1750	120V/1 pH	
SP-06				1750	120V/1 pH	
SP-07				1750	120V/1 pH	
SP-08				1750	120V/1 pH	

Sump:

Tag Number	Sump Config (sq/rd)	Sump Size (L x W/dia)	Finished Floor (feet)	Inlet Pipe (feet)	Water Alarm (feet)	Override (feet)	Pump On (feet)	Pump Off (feet)	Bottom of Sump (feet)
SP-09	round	4'-0"	100.00	97.00	96.50	96.00	95.50	92.50	92.00
SP-10	round	5'-0"							
SP-11	square	4'-0" x 4'-0"							
SP-12	square	5'-0" x 5'-0"							

Brake Horsepower Calculator:

Flow =	10 gpm
Pressure =	35 feet head

©COPYRIGHT 2015 CH2M HILL

Duplex, Submersible Sump Pump	
Fluid Specific Gravity =	1.00
Pump Efficiency =	70%
Motor Efficiency =	90%
Brake Horsepower =	0.14 bhp
Note: Brake horsepower calculator should be deleted from the final equipment schedule.	

©COPYRIGHT 2015 CH2M HILL

Duplex, Column Type, Sump Pump
(Acid Resistant)

Sump Pump:

Tag Number	Flow Rate (gpm)	Pressure (feet head)	Motor (hp)	Motor Speed (rpm)	Power (volts/phase)	Manufacturer, Model No.
SP-13	20	15	1/4	1750	120V/1 pH	Vanton, Model SG-200
SP-14	60	30	1	1750	120V/1 pH	Vanton, Model SG-300
SP-15	100	10	1/2	1750	120V/1 pH	Vanton, Model SG-500
SP-16	100	30	1-1/2	1750	120V/1 pH	Vanton, Model SG-800

Sump:

Tag Number	Sump Config (sq/rd)	Sump Size (L x W/dia)	Finished Floor (feet)	Inlet Pipe (feet)	High Water Alarm (feet)	Pump On (feet)	Pump Off (feet)	Bottom of Sump (feet)
SP-17	round	4'-0"	100.00	97.00	96.50	95.50	92.50	92.00
SP-18	round	5'-0"						
SP-19	square	4'-0" x 4'-0"						
SP-20	square	5'-0" x 5'-0"						

Brake Horsepower Calculator:

Flow =	100 gpm
Pressure =	30 feet head

©COPYRIGHT 2015 CH2M HILL

Duplex, Column Type, Sump Pump (Acid Resistant)	
Fluid Specific Gravity =	1.00
Pump Efficiency =	70%
Motor Efficiency =	90%
Brake Horsepower =	1.20 bhp
Note: 1. Brake horsepower calculator should be deleted from the final equipment schedule. 2. Add a Pump Override column to the Sump Schedule is a duplex system is used.	

©COPYRIGHT 2015 CH2M HILL

Backflow Preventers						
Tag Number	**Valve Type[1]**	**Size (inches)**	**Flow Stream**	**Maximum Operating Flow (gpm)**	**Maximum Pressure Drop (psi)**	**Manufacturer, Model No.**
BFP-01	DC	1/2	W1	3	5	Febco, Model 850
BFP-02	DC	3/4	W1	8	6	Febco, Model 850
BFP-03	DC	1	W1	17	7	Febco, Model 850
BFP-04	DC	1-1/2	W1	45	6	Febco, Model 850
BFP-05	DC	2	W1	75	6	Febco, Model 850
BFP-06	DC	2-1/2	W1	120	5	Febco, Model 850
BFP-07	DC	3	W1	175	5	Febco, Model 850
BFP-08	DC	4	W1	320	3	Febco, Model 850
BFP-09	DC	6	W1	700	3	Febco, Model 850
BFP-10	DC	8	W1	1200	3	Febco, Model 850
BFP-11	DC	10	W1	1900	5	Febco, Model 850
BFP-12	RP	1/4	W1	0.75	10	Conbraco, Series 20-400
BFP-13	RP	3/8	W1	1.5	10	Conbraco, Series 20-400
BFP-14	RP	1/2	W1	3	10	Conbraco, Series 20-400
BFP-15	RP	1/2	W1	3	11	Febco, Model 825Y

©COPYRIGHT 2015 CH2M HILL

Backflow Preventers						
Tag Number	**Valve Type[1]**	**Size (inches)**	**Flow Stream**	**Maximum Operating Flow (gpm)**	**Maximum Pressure Drop (psi)**	**Manufacturer, Model No.**
BFP-16	RP	3/4	W1	8	14	Febco, Model 825Y
BFP-17	RP	1	W1	17	14	Febco, Model 825Y
BFP-18	RP	1-1/2	W1	45	12	Febco, Model 825Y
BFP-19	RP	2	W1	75	12	Febco, Model 825Y
BFP-20	RP	2-1/2	W1	120	11	Febco, Model 825Y
BFP-21	RP	3	W1	175	12	Febco, Model 825Y
BFP-22	RP	4	W1	320	9	Febco, Model 825Y
BFP-23	RP	6	W1	700	10	Febco, Model 825Y
BFP-24	RP	8	W1	1200	11	Febco, Model 825Y
BFP-25	RP	10	W1	1900	12	Febco, Model 825Y

Notes:

1. Valve Type: RP - Reduced Pressure, DC - Double Check.

2. Flow Streams: DIW - Deionized Water, FP - Fire Protection, IRR - Irrigation Water, LCW - Laboratory Cold Water, TWS - Tempered Water Supply, W1 - Potable Water, W2 – Nonpotable Water, W3 - Plant Water.

©COPYRIGHT 2015 CH2M HILL

Plate and Frame Heat Exchangers Data Sheet	
Tag Number(s)	HX-1300
Quantity	One
Equipment Name	Glycol / Water Heat Exchanger
Revision Number	0
PERFORMANCE CRITERIA	
Hot Side	
Fluid	Potable Water
Specific Gravity	1.0
Specific Heat	
Flow Rate (gpm)	30
Inlet Temperature (deg. F)	80 deg F
Outlet Temperature (deg. F)	70 deg F
Viscosity at Inlet Temperature (SSU)	31.5
Viscosity at Outlet Temperature (SSU)	31.5
Maximum Pressure Loss (PSID)	5
Cold Side	
Fluid	40% Glycol / Water mix
Specific Gravity	1.07
Specific Heat	0.845
Flow Rate (gpm)	15

©COPYRIGHT 2015 CH2M HILL

Plate and Frame Heat Exchangers Data Sheet				
Inlet Temperature (deg. F)	44 deg F			
Outlet Temperature (deg. F)	54 deg F			
Viscosity at Inlet Temperature (cP)	4.8			
Viscosity at Outlet Temperature (cP)	3.5			
Maximum Pressure Loss (PSID)	5			
DETAILED CRITERIA				
Connection Schedule				
Nozzle/Connection	Location*	Size	Rating	Facing
Hot side inlet		1-1/2”	125# Flanged	FF
Hot side outlet		1-1/2”	125# Flanged	FF
Cold side inlet		1”	125# Flanged	FF
Cold side outlet		1”	125# Flanged	FF
Drain	N/A			
Materials				
Plates	*			
End Plate	*			
Gaskets	*			
Flanges	*			
Plate Shroud	*			
Carrying Rod	*			

©COPYRIGHT 2015 CH2M HILL

Plate and Frame Heat Exchangers Data Sheet	
Compression Bolts	*
Cleaning and Packaging Level	Potable water service
Testing	
Hydrostatic Testing (Y/N)	Y
Helium Test (Y/N)	N
Halogen Test (Y/N)	N
Witness Required (Y/N)	N
ADDITIONAL COMMENTS	
*Use this diagram to identify connection location 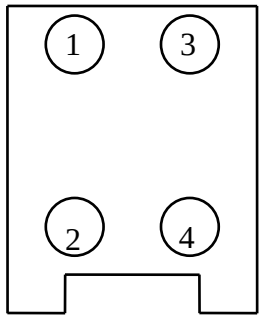	

Notes:

* - Information provided by Vendor

©COPYRIGHT 2015 CH2M HILL

SECTION 26 31 00
PHOTOVOLTAIC POWER SYSTEM

PART 1 GENERAL

1.01 SCOPE OF WORK

A. Scope:

1. Contractor shall provide all labor, materials, equipment and incidentals as shown on the Contract Drawings, specified and required to furnish and a complete and operational photovoltaic power system for the CSO-1008 remote site.
2. Included are the photovoltaic panel(s), roof racking hardware, combiner boxes, grid-tie inverter, and all accessories and appurtenances.
3. This specification pertains only to the Construction Headquarters at Moabi Park.

1.02 QUALITY ASSURANCE

A. General:

1. All equipment, components, and materials required for the photovoltaic power system shall be furnished by a single supplier who shall assume the responsibility for adequacy and performance of all items.
2. The supplier shall provide their company's quality assurance plan, and for components which are not of their manufacture, the component manufacturer's quality assurance plan. The plans shall include but not necessarily be limited to method of testing, raw material criteria, methods of documentation, "Burn-In," final tests, serialization coding, and packaging.

B. Photovoltaic Power System Supplier Qualifications:

1. Shall be a financially sound firm having at least 5 years' continuous experience in designing, implementing, supplying and supporting photovoltaic power systems.
2. Shall have in existence at the time of bid advertisement, an experienced engineering and technical staff capable of designing, implementing, supplying, and supporting photovoltaic systems and handling the submittal, testing, and training requirements.
3. Shall have a demonstrated record of prompt positive response to field failures.

©COPYRIGHT 2015 CH2M HILL

4. Shall have a record of prompt shipments in accordance with contract obligations required for previous projects.
5. Shall have a demonstrated experience record of successful photovoltaic power system equipment installations.

C. Supplier's Responsibility:

1. Contractor shall retain the system supplier to assume the responsibilities specified below. However, execution of these specified duties by the system supplier shall not relieve the Contractor of the ultimate responsibility for the system.
   a. Detailed design, engineering, fabrication, assembly, wiring, testing, and debugging of the photovoltaic power system in accordance with this specification, the Contract Documents, the reviewed submittal drawings, and all referenced standards and codes.
   b. Preparation, assembly, submission, and correction of all photovoltaic power system submittals in accordance with the Contract Documents.
   c. Supervision of the installation of the photovoltaic power system, instruments, panels, consoles, cabinets, wiring, and other components required.
   d. Calibration, testing, and start-up of the photovoltaic power system.
   e. Training of Owner personnel in operation and maintenance of the photovoltaic power system.
   f. Handling of all warranty obligations for the control system components.

D. Reference Standards:

1. The following organizations have generated standards that are to be used as guides in assuring quality and reliability of components and systems; govern nomenclature; define parameters of configuration and construction, in addition to specific details in this Specification and the Contract Drawings:
   a. American National Standards Institute (ANSI).
   b. Institute of Electrical and Electronic Engineers (IEEE).
   c. National Electrical Code (NEC).
   d. National Fire Protection Association (NFPA).
   e. Occupational Safety and Health Administration (OSHA).
   f. Underwriters Laboratories, Inc. (UL).

 ©COPYRIGHT 2015 CH2M HILL

1.03 SUBMITTALS

A. Shop Drawings:

1. General:
   a. Make Shop Drawing submittals in accordance with the requirements of the Contract Documents. Submit all substitutions (products by manufacturers other than those specifically named) in accordance with the requirements of the Specifications.
   b. Manufacture of the photovoltaic power system shall not commence until related submittals have been approved by Engineer.
   c. Shop Drawings shall be submitted in complete packages grouped to permit review of related items as generally outlined below.
   d. Review of Shop Drawings will be for conformance with Contract Documents and with regard to functions specified to be provided.
   e. All submittals shall be tailored for the project by indicating all options or accessories provided and/or deleting or crossing out nonapplicable options or information.
2. Submittal Requirements:
   a. Product information for all components. Include the following:
      1) Manufacturer’s product name and model number.
      2) Manufacturer’s standard catalog product data.
      3) Description of construction features.
      4) Performance and operation data.
      5) Installation and mounting details, instructions, and recommendations.
      6) Identification of all wiring interconnections and points of connection.
      7) Service requirements.
      8) Dimensions.
   b. Panels, Consoles, and Cabinets Information:
      1) Layout Drawings, include the following:
         a) Front, rear, and interior subpanel views to scale. Scale shall be identified on Drawings.
         b) Dimensional information.
         c) Tag number and functional name of components mounted in and on panel or enclosure.
         d) Product information on all panel components. Include information as specified above for the field sensors/transducers and instruments.
         e) Nameplate location and legend including text, letter size, and colors to be used.

©COPYRIGHT 2015 CH2M HILL

f) Location of anchoring connections and holes.
g) Location of external wiring and/or piping connections.
h) Mounting and installation details.
i) Subpanel layouts and mounting details for all items located inside control panels.

2) Panel schematic and internal point-to-point wiring and/or piping diagrams, include the following:
a) Name of panel or enclosure.
b) Wiring sizes, types, and numbers.
c) Piping sizes and types.
d) Terminal strip and post numbers for all interconnections.
e) Color coding.
f) Functional name and manufacturer's designation for components to which wiring and piping are connected.

3) Electrical control schematics in accordance with IEEE standards for all circuits indicated in the Specifications or on the Contract Drawings. No "typical" wiring diagrams will be acceptable and no tables or charts to describe wire numbers will be acceptable. All wires shall be labeled and shown on the submittal drawings.

4) Plan showing equipment layout in each area.

5) Stock lists or Bill of Materials for each panel including tag number, functional name, manufacturer's name, manufacturer's model number, and quantity for all components mounted in or on the panel or enclosure.

6) Heat calculations for each panel or enclosure to verify that there is sufficient dissipation and/or generation of heat to maintain interior panel temperatures within the maximum and minimum operating temperature of all panel components with ambient temperatures as specified below.

7) Solar cell sizing calculations.

c. Field wiring and piping diagrams, include the following:
1) Wiring and piping sizes, types, and numbers.
2) Terminal strip numbers for each wire termination.
3) Color coding.
4) Conduits, junction boxes, and pull boxes in which wiring is to be located.
5) Location, functional name, and manufacturer's designation of items to which wiring and/or piping are connected.

©COPYRIGHT 2015 CH2M HILL

6) Point-to-point wiring diagrams shall include all interconnections between field devices, panels, control stations, lighting panels, and motor starters.

B. Photovoltaic Power System Operation and Maintenance Manuals:

1. Furnish three copies of O&M manuals for the photovoltaic power system with the requirements below:
2. The O&M manuals shall include the following:
   a. Name, address, and telephone number of each manufacturer's local service representative.
   b. Complete list of supplied system hardware parts with full model numbers referred to system part designations, including spare parts and test equipment provided.
   c. Copy of all approved submittal information and system shop drawings as specified herein with corrections made to reflect all shop drawing review comments and the actual system as tested and delivered to the site for installation. Half-size black line reproductions shall be provided for all shop drawings larger than 11 by 17 inches.
   d. Manufacturer's Original Copies of Hardware, Installation, Assembly, Programming, and Operations Manuals for all system components. Manuals shall include the following information:
      1) General descriptive information covering the basic features of the equipment.
      2) Physical description covering layout and installation requirements and all environmental constraints.
      3) Standard technical documentation covering the procedures for programming, operation, startup, shutdown, and calibration of the equipment and explaining how the various control functions are performed.
      4) Principles of operation explaining the logic of operation; provide information covering operation to a component level.
      5) Maintenance procedures covering checkout, troubleshooting, and servicing; checkout procedures shall provide the means to verify the satisfactory operation of equipment, troubleshooting procedures shall serve as a guide in determining faulty components, and servicing procedures shall cover requirements and recommended time schedule for calibration, cleaning, lubrication and other housekeeping and preventive maintenance procedures.
      6) Wiring, schematic, and logic diagrams.

©COPYRIGHT 2015 CH2M HILL

7) Safety considerations relating to operation and maintenance procedures.
8) Manufacturer's recommended spare parts list with model numbers.

3. All O&M Manuals shall be tailored for the project by indicating all options or accessories provided and/or deleting or crossing out non-applicable options or information.

1.04 EQUIPMENT DELIVERY, HANDLING AND STORAGE

A. Contractor shall make all arrangements for transportation, delivery and storage of the equipment and materials in accordance with the requirements of the Contract Documents, requirements of the system supplier, and requirements of the equipment manufacturers.

B. Photovoltaic power system equipment shall be packaged, to the extent possible, at the factory prior to shipment to protect each item from damage during shipment and storage. Containers shall be protected against impact, abrasion, corrosion, discoloration and/or other damages. Clearly label contents of each container and provide information on the required storage conditions necessary for the equipment. Keep Owner and Engineer informed of equipment delivery.

C. All equipment shall be handled and stored in accordance with manufacturer's instructions and relevant organization standards. Equipment shall be protected from weather, moisture and other conditions which could cause damage. Items which require a controlled environment for storage such as panels and microprocessor units shall be stored in a climate controlled warehouse or facility. System supplier shall notify Contractor in writing, with copies to Owner and Engineer, of the storage requirements and recommendations for the equipment prior to shipment.

1.05 GENERAL DESIGN REQUIREMENTS

A. Miscellaneous:

1. All photovoltaic power system components shall be heavy-duty types, designed for continuous service. The system is to contain products of a single manufacturer, when possible, and to consist of equipment models which are currently in production.
2. Lightning protection shall be provided for all equipment to protect against damage by electrical surges.

©COPYRIGHT 2015 CH2M HILL

3. All field-mounted instruments and system components shall be designed for installation in humid and slightly corrosive service conditions. All field mounted instrument enclosures, junction boxes, and appurtenances shall conform to NEMA 4X requirements unless otherwise specified.
4. All panel mounted instruments, switches, and other devices shall be selected and arranged to present a pleasing coordinated appearance. All components furnished including field and rear of panel instruments shall be tagged with the item number and nomenclature indicated on the Contract Documents and/or approved Shop Drawings.
5. Field-mounted devices shall be treated with an anti-fungus spray.

B. Environmental Conditions:

1. The control system shall be designed and constructed for continuous operation under the following temperature and humidity conditions:
   a. Ambient Temperature: Minus 20 to 130 degrees F.
   b. Relative Humidity (Noncondensing): 100 percent maximum.

PART 2 PRODUCTS

2.01 DESIGN CRITERIA

A. Design Conditions:

1. Location: Needles, CA.

2.02 DETAILS OF CONSTRUCTION

A. Materials of Construction:

1. Enclosure:
   a. Material: Type 5025 aluminum.
   b. Rating: NEMA 3R.
   c. Mounting: Capable of mounting on a 6-inch diameter galvanized steel pole.
   d. Provide a hasp and staple for padlocking. Provide padlock and key.
   e. Front panel of door shall be blank.
2. Photovoltaic Panel:
   a. Type: High efficiency photovoltaic module using polycrystalline silicon cells.
   b. Quantity: As shown on Drawings.
   c. Maximum Power: 305Wp.
   d. Maximum Operating Voltage: 36.18 V.

©COPYRIGHT 2015 CH2M HILL

e. Maximum Operating Current: 8.43 A.
f. Output Cables:
   1) Type: RHW-2.
   2) Gauge: #10.
   3) Length: 30 inches, minimum.
g. Construction:
   1) Front: High-transmission 3 mm tempered glass.
   2) Back: Polyester.
   3) Encapsulant: Ethylene-vinyl acetate (EVA) copolymer.
   4) Frame: Clear anodized Type 6063T6 aluminum.
h. Manufacturer: BYD, or equal, as approved by the Engineer.

3. Roof Rack Mounting:
   a. Complete roof racking system, with long beams, mid and end row mounting feet, pivot blocks, module clips, tilt props, connector assemblies, and any other required accessories.
   b. Material: Aluminum or stainless steel.
   c. Tilt: Adjustable.
   d. Manufacturers:
      1) Unirac.
      2) Precision RMS.
4. Inverter:
   a. Grid-tie type, with 120/208V, three-phase, four-wire output.
   b. Enclosure: NEMA 4X.
   c. Operating Temperature Range: Minus 76 to 140 degrees F.
   d. Manufacturers:
      1) Power-One.
      2) Solectria.
      3) Or equal as approved by Engineer.

PART 3 EXECUTION

3.01 INSTALLATION

A. Environmental Requirements:

1. No equipment shall be scheduled to be installed in an area where active construction may cause it to be damaged, unless Contractor provides adequate protection for said equipment.
2. Miscellaneous hardware such as fittings, fasteners, screws, etc., shall be of Type 316 stainless steel and shall be suitable for the service intended.

©COPYRIGHT 2015 CH2M HILL

B. Installation of Equipment:

1. Field mounted equipment shall be secured to stands or brackets in accordance with the manufacturer's recommendations and the approved Shop Drawings.
2. Equipment shall be located generally where shown. Exact locations shall be confirmed in the field.
3. All devices shall be installed such that they are readily accessible for service and do not cause potential hazards.

C. Material of Construction: All cable, conduits, stands, supports and appurtenances shall be in accordance with manufacturer's recommendations, approved Shop Drawings and as shown on Contract Drawings.

D. System Checkout:

1. Contractor shall furnish the following documentation to the Owner and Engineer as proof of readiness to begin checkout.
2. Contractor shall give written notification to the Owner and Engineer 14 days in advance of their readiness to begin system checkout and shall schedule system checkout on dates agreed on by the Owner and Engineer.
3. Contractor shall have a written procedure for checkout. This written procedure shall be submitted to the Owner and Engineer for approval 1 month prior to the beginning of checkout. Contractor shall submit for approval a written procedure for commissioning to the Owner and Engineer at the same time.
4. Contractors shall record the results of systems checkout, effect whatever remedial action is required and arrange for re-inspection to review said remedial action, at no additional cost to the Owner or Engineer.
5. The completion of the above does not relieve Contractor from guarantees specified elsewhere in this Section.

E. Services and Operator Instructions:

1. Contractor shall furnish all repairs or replacement of defective materials, equipment or workmanship, including with respect to equipment, the services of factory-trained servicemen.
2. Contractor shall furnish, as part of this Contract, a 2-year service contract covering parts and labor for the complete system. Service contract shall be with nearest "Authorized dealer/service representative" for on-site service.

©COPYRIGHT 2015 CH2M HILL

3.02 CALIBRATION, STARTUP AND TESTING

A. Field verify the operation and performance of equipment prior to startup of the associated equipment, and document on a separate sheet for each.

1. For each certification sheet, include the following information:
   a. Project name.
   b. Tag or panel number/name and description.
   c. Manufacturer or vendor.
   d. Model and serial number (if applicable).
   e. Date, time and person who performed calibration or panel vendor checkout.
   f. Space for comments.
   g. Space for sign off and date.

B. System Check-Out and Startup Responsibilities:

1. Contractor shall retain the services of the photovoltaic system supplier to supervise and/or perform check-out and startup of all system components. As part of these services, the supplier shall include, for those equipment items not manufactured by him, the services of an authorized manufacturer's representative to check the equipment installation and place the equipment in operation. The manufacturer's representative shall be thoroughly knowledgeable about the installation, operation and maintenance of the equipment.
2. Check and approve the installation of all system components and all cable and wiring connections between the various system components prior to placing the various processes and equipment into operation.
3. Conduct a complete system checkout and adjustment, including tuning, calibration, and checking of all equipment. All problems encountered shall be promptly corrected to prevent any delays in startup of the various unit processes.
4. Contractor shall provide all test equipment necessary to perform the testing during system checkout and startup.
5. Contractor shall furnish Engineer an Installation Inspection Report certifying that all equipment has been installed correctly and is operating properly. The report shall be signed by authorized representatives of both Contractor and the System Supplier.

©COPYRIGHT 2015 CH2M HILL

3.03 PHOTOVOLTAIC SYSTEM TRAINING

A. General:

1. Contractor shall retain the services of the System Supplier to provide operation and maintenance training for all photovoltaic system equipment as specified herein.
2. For equipment items not manufactured or supplied by the System Supplier, Contractor shall provide for on-site training by an authorized representative of the equipment manufacturer as part of their services. The manufacturer's representative shall be fully knowledgeable in the operation and maintenance of the equipment.
3. Contractor shall be responsible for all costs associated with training and shall provide all required materials, texts and required supplies.

B. On-Site Training:

1. Training shall accomplish the following:
   a. Provide instruction covering use and operation of the equipment to perform the intended functions.
   b. Provide instructions describing procedures for routine, preventive and troubleshooting maintenance, including equipment calibration.
   c. Explain procedures for placing the equipment in and out of operation and explain necessary actions and precautions to be taken regarding the overall plant monitoring and control system.
   d. Provide classes and field training as to how to change process control and alarm set points in all microprocessor based controllers and transmitters. Maintenance personnel shall be trained to enter passwords, programming or configuration data, etc.

END OF SECTION

©COPYRIGHT 2015 CH2M HILL

SECTION 26 32 13.16
NATURAL GAS ENGINE GENERATOR SET

PART 1 GENERAL

1.01 REFERENCES

A. The following is a list of standards which may be referenced in this section:

1. ASTM International (ASTM): A335/A335M, Specification for Seamless Ferritic Alloy-Steel Pipe for High-Temperature Service.
2. Code of Federal Regulations (CRF): Title 40 Volume 18, Control of Emissions from New and In-Use Non-road Compression-Ignition Engines.
3. International Organization for Standardization (ISO): 9001, Quality Management Systems—Fundamentals and Vocabulary.
4. National Electric Manufacturer's Association (NEMA):
   a. 250, Enclosures for Electrical Equipment (1,000 Volts Maximum).
   b. MG 1, Motors and Generators.
5. National Electrical Contractors Association (NECA): 404, Recommended Practice for Installing Generator Sets.
6. National Fire Protection Association (NFPA):
   a. 37, Installation and Use of Stationary Combustion Engines and Gas Turbines.
   b. 70, National Electric Code.
   c. 110, Emergency and Standby Power Systems.
7. SAE International (SAE): J1074, Engine Sound Level Measurement.
8. Underwriters Laboratories, Inc. (UL):
   a. 508, Industrial Control Equipment.
   b. 1236, Battery Chargers for Charging Engine-Starter Batteries.
   c. 2200, Stationary Engine Generator.

1.02 SUBMITTALS

A. Action Submittals:

1. Dimensioned outline drawing showing plan and elevations of engine generator set and drive system.
2. Paragraph by paragraph specification compliance statement, describing differences between specified and proposed equipment.
3. Engine and generator weight, and anchoring requirements.

©COPYRIGHT 2015 CH2M HILL SUPPLEMENTAL

4. Catalog information and technical description; include materials for block, heads, valves, rings, cylinders, pistons, crankshaft, and major bearings and wear surfaces.
5. Complete list of accessories provided.
6. Performance curves showing engine efficiency (fuel consumed per kWh output), gross fuel consumption rate, and kW output at design rated output, one-half load, and one-quarter load. Account for design altitude, temperature corrections, and engine parasitic loads.
7. Transient and subtransient reactances per unit.
8. Output waveform and telephone interference factor (TIF).
9. Circuit breaker data, including make model, catalog number, settings, and time current curves.
10. Control panel instrument identification inscriptions.
11. Sample guarantee.
12. Electrical schematic and wiring diagrams for the following:
    a. Generator control panel.
    b. Main generator.
    c. Voltage regulator.
    d. Battery charging system.
    e. Governing system.
    f. Enclosed electrical components.
13. Engine generator set motor starting capability and percent voltage dip curve.
14. Block heater size and voltage.
15. Jacket water heater size and voltage.
16. Noise data for enclosed engine generator at 50 percent, 75 percent, and full load.

B. Informational Submittals:

1. Manufacturer’s Certificate of compliance with specified EPA CARB emissions requirements in accordance with Section 01 43 33, Manufacturers’ Field Services (to be completed).
2. Certification, copies of analyses, or test reports demonstrating appropriate vibration analysis and design in all modes.
3. Component and attachment testing seismic certificate of compliance as required by Section 01 45 33, Special Inspection, Observation, and Testing (to be completed).
4. Factory Test Report.
5. Operation and Maintenance Data: As specified in Section 01 78 23, Operation and Maintenance Data (to be completed).
6. Description of parts and service availability.

©COPYRIGHT 2015 CH2M HILL

7. Manufacturer's Certificate of Proper Installation, in accordance with Section 01 43 33, Manufacturers' Field Services (to be completed).
8. Special guarantee.

1.03 QUALITY ASSURANCE

A. Authority Having Jurisdiction (AHJ):

1. Provide the Work in accordance with NFPA 70, National Electrical Code (NEC). Where required by the AHJ, material and equipment shall be labeled or listed by a nationally recognized testing laboratory or other organization acceptable to the AHJ in order to provide a basis for approval under NEC.
2. Materials and equipment manufactured within the scope of standards published by Underwriters Laboratories, Inc. shall conform to those standards and shall have an applied UL listing mark.

B. Manufacturer Special Requirements:

1. Engine generator set as a complete unit shall be listed to UL 2200 or submitted to an independent third party certification process to verify compliance as installed.
2. Manufacturer of generator set shall be certified to ISO 9001 and shall have third party certification verifying quality assurance in design/development, production, installation, and service, in accordance with ISO 9001.

1.04 SPECIAL GUARANTEE

A. Provide manufacturer's guarantee or warranty with no deductibles and including travel time, service hours, repair parts and expendables (oil, filters, antifreeze and other items required for the complete repair) with Owner named as beneficiary, in writing, as special guarantee. Special guarantee shall provide for correction of the Work specified in this Specification section found defective during a period of 2 years after the date of Substantial Completion. Duties and obligations for correction or removal and replacement of defective Work as specified in the General Conditions.

©COPYRIGHT 2015 CH2M HILL

1.05 EXTRA MATERIALS

A. Furnish, tag, and box for shipment and storage the following spare parts and special tools:

Item	Quantity
Air cleaner filter element	1 complete set
Auxiliary jacket water pump packing/seals	1 complete set
Cooling fan drive belt (if applicable)	2 complete sets
Hydrometer	1 each
Two-pronged battery voltmeter	1 each
Spare fuses, if used in control panel	1 complete set
Spare indicating lamps (if applicable)	4 each type used
Touch up paint	1 quart each color used
Special tools required to maintain or dismantle engine generator set	1 complete set

PART 2 PRODUCTS

2.01 MANUFACTURERS

A. Materials and equipment specified in this section shall be products of:

1. Cummins; Model GGMC.
2. Caterpillar; approved equal model.
3. Kohler; approved equal model.

2.02 SERVICE CONDITIONS

A. Ambient Temperature at Air Intake: 120 degrees F maximum.

B. Ambient Temperature at Engine Generator Set: 120 degrees F maximum.

2.03 GENERAL

A. Ratings:

1. Operate at 1,800 rpm.
2. Rated at 26.0 kW at 0.8 PF, based on specified service conditions.
3. Voltage: 120Y/208Y volts, three-phase, three-wire, 60-Hz.

©COPYRIGHT 2015 CH2M HILL

4. Rated based on prime service.

B. Emissions: Engines shall meet US EPA standard emission requirements specified in 40 CFR Chapter I Part Parts 60, 1048.

C. Vibration Design:

1. Use vibration analytical techniques to determine shaft critical speeds, and to develop bearing design and shaft balancing to mitigate vibration.
2. Apply torsional analysis and design to mitigate torsional vibration.
3. Engine and generator, individually, shall not exhibit vibration in any plane exceeding 10 mils at continuous rating point, when measured at attachment points to common steel subbase.

2.04 ENGINE

A. General:

1. Manufacturer’s standard design, unless otherwise specified.
2. Engine parts designed with adequate strength for specified duty.

B. Type:

1. Four cycle industrial spark ignited type with unit mounted radiator and fan cooling.
2. Minimum displacement shall be as recommended by generator manufacturer.
3. Minimum number of cylinders shall be as recommended by generator manufacturer.

C. Starting System:

1. Type: Automatic, using 12-volt or 24-volt battery-driven starter acting in response to control panel.
2. Starter shall be capable of three complete cranking cycles without overheating.
3. Batteries:
   a. Sized as recommended by engine manufacturer.
   b. Lead-acid type.
   c. Capable of providing 15 seconds minimum of cranking current at 0 degree C and three complete 15-second cranking cycles at 40 degrees C.
   d. Housed in acid-resistant frame isolated from engine generator main frame.

©COPYRIGHT 2015 CH2M HILL

e. Located such that maintenance and inspection of engine is not hindered.
f. Complete with battery cables and connectors.
g. Electric battery warmer plate.

4. Battery Charger:
   a. UL 1236 listed and labeled.
   b. 10-amp automatic float, taper and equalize charge type, with plus or minus 1 percent voltage regulation over a plus or minus 10 percent input voltage variation.
   c. Temperature compensated to operate over an ambient range of minus 30 to 50 degrees C.
   d. Locate charger in automatic transfer switch, generator control panel, or wall mounted in generator enclosure. Generator manufacturer shall coordinate location.
   e. Include:
      1) Ammeter and voltmeter.
      2) Fused ac input and dc output.
      3) Power ON pilot light.
      4) AC failure relay and light.
      5) Low and high dc voltage alarm relay and light.
   f. Alarm relay dry contacts rated 4 amps at 120V ac.
   g. Wire battery charger status and alarm contacts back to generator control panel, terminate and identify contacts.

D. Fuel System:

1. Natural gas.
2. Complete engine fuel system including all pressure regulators, strainers, and control valves. The fuel system shall be plumbed to generator skid for ease of site connections.
3. Fuel Connections to Engine: Flexible hose, suitable for application.

E. Governing System:

1. Electro-mechanical or electro-hydraulic type.
2. Regulates speed as required to hold generating frequency within tolerable limits and within 5 percent of nominal design speed.
3. Accessories:
   a. Manual speed control device.
   b. Positive overspeed trip switch.

©COPYRIGHT 2015 CH2M HILL

F. Jacket Water Cooling System:

1. Radiator:
   a. Consisting of jacket water pump, fan assembly, fan guard, and duct flange outlet.
   b. Cooling System: Rated for full load operation as specified in Article Service Conditions.
   c. Fan: Suitable for use in a system with 0.5 in H_2O restriction.
   d. Sized based on a core temperature that is 20 degrees F higher than rated operation temperature.
2. Engine Thermostat: As recommended by manufacturer to regulate engine water temperature.
3. Jacket Water Heater:
   a. Suitable for operation on 120–volt, single-phase, 60-Hz current.
   b. Maintain engine water temperature at 120 degrees F with an ambient temperature of 50 degrees F.
   c. Thermostatically controlled.
4. Engine Cooling Liquid: Fill cooling system with a 50/50-ethylene glycol/water mixture prior to shipping.

G. Lubrication System:

1. Type: Full-pressure.
2. Accessories:
   a. Pressure switch to initiate shutdown on low oil pressure.
   b. Oil filter with replaceable element.
   c. Bayonet type oil level stick.
   d. Valved oil drain extension.
3. Oil Cooling System: Water-cooled heat exchanger utilizing jacket water.

H. Exhaust System:

1. Muffler: Rated as recommended by generator manufacturer to meet noise requirements specified under Article Sound Attenuation.
2. Wrap exposed length of exhaust pipe and silencer with thermal insulating wrap.
3. Exhaust Pipe: ASTM A335, Grade P11, standard wall, with fittings selected to match piping materials.
4. Provide fittings as recommended by generator manufacturer to prevent rain from entering exhaust system of engine that is not operating.
5. Pipe Connections: Welded.

©COPYRIGHT 2015 CH2M HILL SUPPLEMENTAL

6. Engine Connection:
   a. Flanged, flexible, corrugated, Type 321 stainless steel expansion fitting, specifically suited for diesel exhaust service.
   b. Length as required for flexibility and expansion in piping arrangement shown on Drawings.

I. Air Intake System: Equip with dry type air cleaner with filter service (restriction) indicator.

2.05 GENERATOR

A. General:

1. Meet requirements of NEMA MG 1.
2. Synchronous type with 2/3 pitch, revolving field, drip-proof construction, air cooled by a direct drive centrifugal blower fan.
3. Stator Windings:
   a. Skewed for smooth voltage waveform.
   b. Reconnectable, 12 lead.
4. Overspeed Capability: 125 percent.
5. Waveform Deviation from Sine Wave: 5 percent maximum.
6. Telephone Interference Factor: 50 maximum.
7. Total Harmonic Current and Voltage Distortion: 5 percent maximum, measured at generator main circuit breaker.

B. Insulation System:

1. Class F, with a maximum rise of 105 degrees C over 40 degree C ambient in accordance with NEMA MG 1.
2. Vacuum pressure impregnated (VPI), fungus resistant in accordance with MIL E-4970A.

C. Excitation System:

1. Field brushless type or permanent magnet generator (PMG) exciter.
2. PMG and Controls: Capable of providing regulated current, at a rate of 300 percent of nameplate current, to a single-phase or three-phase fault for 10 seconds.

D. Voltage Regulation:

1. Solid state, three-phase sensing type.
2. Adjustable output voltage level to plus or minus 5 percent.

©COPYRIGHT 2015 CH2M HILL

3. Provisions for proper voltage regulation for existing or future adjustable frequency drives as part of generator load.

E. Voltage and Frequency Regulation Performance:

1. Steady State Voltage Regulation: Less than plus or minus 1 percent from no load to continuous rating point.
2. NEMA MG 1 Defined Transient Voltage Dip:
   a. Less than 15 percent at rapid application of rated load.
   b. Recovery to rated voltage and frequency within 2 seconds following initial load application.
3. Steady State Frequency Regulation: Plus or minus 1.5-Hz overload range.

F. Motor Starting Capability: Apply loads in the order listed in the following table.

Load Table

Step	Load Description	Rating	Type (Hp, Kw, Amps)	Starting Type	Largest Motor
1	Distribution Panel			Full Voltage	
2	24V dc Power Supply	200	W	Full Voltage	
3	Building Ventilation Fans	N/A		Full Voltage	
4	Building Lights	120	W	Full Voltage	
5	Pond Lights	240	W	Full Voltage	
6	Flood Lights	240	W	Full Voltage	
7	Pontoon Pump #1	3	Hp	Full Voltage	3 Hp
8	Pontoon Pump #2	3	Hp	Full Voltage	3 Hp
9	Transfer Pump Outlets	1	Hp	Full Voltage	1 Hp

G. Short Circuit Capabilities: Sustain 300 percent of rated current for 10 seconds for external three-phase bolted fault without exceeding rated temperatures.

H. Main Circuit Breaker:

1. Type: Molded case.
2. Current Rating: As recommended by generator manufacturer.

©COPYRIGHT 2015 CH2M HILL

3. Interrupt Rating: 100A RMS symmetrical at 600V AC.
4. Trips: Thermal-magnetic with inverse time characteristics and adjustable magnetic pickup.
5. Enclosure:
   a. Rating: NEMA 250, Type 12.
   b. Mounted with vibration isolation from engine generator set.
6. Surge Protective Devices: Three-phase capacitors and arresters mounted in terminal compartment.

2.06 BASEPLATE

A. Mount engine generator set on a rigid common steel base frame.

B. Base frame shall be stiffened to minimize deflections.

2.07 VIBRATION ISOLATORS

A. Performance: To meet code requirements specified in Section 01 61 00, Common Product Requirements (to be completed).

B. Provide vibration isolators, spring/pad type.

C. Include seismic restraints if required by Site location.

2.08 AUTOMATIC LOAD TRANSFER CONTROL

A. Automatic run controls shall be suitable for remote interface and control by automatic transfer switch. Engine generator set shall start and run upon closure of a remote dry contact provided in Section 26 36 23, Automatic Transfer Switches.

2.09 CONTROL SYSTEM

A. Control Panel:

1. Rating: NEMA 250, Type 12.
2. Material: Steel.
3. Instrument Identification: Face label or engraved, black, laminated plastic nameplate with white 1/4-inch-high letters, attached with Type 422 stainless steel screws.
4. UL 508 listed.
5. Tested to meet or exceed IEEE 587 requirements for voltage surge resistance.

©COPYRIGHT 2015 CH2M HILL

6. Controls shall be solid-state, microprocessor based. Control panel shall be designed and built by generator manufacturer and shall provide operating, monitoring, and control functions for generator set.

B. Instrumentation:

1. Type: Suitable for engine-mounted vibration environment.
2. Mounting: Nonshock mounted.
3. Alarm and Signal Contacts: Rated 5 amps at 120V ac, dry.
4. Fault Indication Lamps: Push-to-test type.
5. Meters: Digital with analog display, plus or minus 2 percent accuracy.

C. Operator Controls and Indicators:

1. HANDCRANK/STOP/AUTO/ENGINE TEST selector switch.
2. Generator voltage adjustment.
3. Voltmeter PHASE SELECTOR switch.
4. Ammeter PHASE SELECTOR switch.
5. Voltmeter.
6. Ammeter.
7. Kilo-Watts (kW).
8. Percent kW.
9. Power Factor.
10. FREQUENCY meter.
11. Engine OIL PRESSURE indicator.
12. Engine jacket WATER TEMPERATURE indicator.
13. Engine SPEED indicator (RPM).
14. Engine OIL TEMPERATURE indicator.
15. RUNNING TIME indicator.
16. DC battery voltage.
17. Emergency Stop button.

D. Alarm Indicators with Manual Pushbutton RESET:

1. Low oil pressure.
2. High jacket water temperature.
3. Engine overspeed.
4. Engine overcrank.
5. Low/high dc voltage.

E. External Interfaces:

1. Furnish a single, common DPDT relay output upon occurrence of alarm condition.

©COPYRIGHT 2015 CH2M HILL

2. Output: Dry contacts rated 5 amps at 120V ac for following status indications at remote PLC panel:
   a. Generator in Hand mode.
   b. Generator in Auto mode.
   c. Generator Out of Service.
   d. Generator in Fault/Trouble.
   e. Generator Running.
3. Accept remote dry start contact closure from automatic transfer switch, rated 10 amps at 32V dc.

F. Functional Requirements:

1. LCD text display of alarm/event descriptions.
2. Recranking Lockout: When engine fires, starting control shall automatically disconnect cranking control to prevent recranking for a preset period of time after engine stop.
3. Overcranking Lockout: Initiate after four cranking cycles of 10 seconds on and 10 seconds off or provide continuous cranking cycle with crank time limiter.
4. Cool-down Timer: Adjustable from 5 to 60 minutes.
5. Alarms:
   a. Low coolant level.
   b. Low fuel level.
   c. Low battery voltage.
   d. High battery voltage.
   e. Battery charger failure.
6. Engine shutdown upon any of the following conditions:
   a. Engine overspeed.
   b. Emergency stop button depressed.
   c. High jacket water.
   d. Low oil pressure.
7. Air Inlet Damper Opening:
   a. Upon engine start sequence initiation, a normally closed, dry contact, rated 5 amps at 120V ac, from engine start circuit shall open to provide a signal to open air inlet dampers.
   b. Air inlet dampers shall fail open.

G. Special Requirements: Mount battery charger in control panel.

H. Power Requirements: 120/208Y volts, three-phase.

©COPYRIGHT 2015 CH2M HILL

2.10 FACTORY FINISHING

A. Engine Generator Set and Instrument Panel: Factory-applied primer and two finish coats of manufacturer's standard heat-resistant engine paint.

2.11 FACTORY TESTS

A. General: Conform to NFPA 110.

B. Steady Load Test: Test engine generator set at steady load run of 60 minutes minimum duration at 100 percent full-rated load.

C. Transient Load Test: Conduct transient load test to demonstrate ability to meet load pickup and load release requirements specified.

D. Harmonic Test: Conduct at full load conditions.

E. Record and Report:

1. Strip chart recording and full harmonic analysis measuring up to 50th harmonic for both voltage and current and three phases simultaneously.
2. Transient response.
3. Load/speed stability.
4. Engine fuel consumption.
5. Power output.
6. Harmonic analysis.

PART 3 EXECUTION

3.01 INSTALLATION

A. Level and securely mount engine generator set in accordance with manufacturer's recommendations.

B. Install in accordance with NECA 404.

C. Where applicable, mount engine generator set on vibration isolators in accordance with isolator manufacturer's recommendations.

3.02 FIELD FINISHING

A. Touch up damaged coating with paint system compatible to existing.

©COPYRIGHT 2015 CH2M HILL SUPPLEMENTAL

3.03 FIELD TESTS

A. General: Conform to NFPA 110.

B. Performance Test:

1. Perform upon completion of installation.
2. Operate 2 hours minimum.
3. Manufacturer's representative shall make necessary adjustments.
4. Demonstrate ability of engine generator set to carry specified loads.
5. Demonstrate engine generator set safety shutdowns.

C. Test Report:

1. Record and report the following:
   a. Electric load on generator.
   b. Fuel consumption.
   c. Exhaust temperature.
   d. Ambient air temperature.
   e. Safety shutdown performance results.
   f. Noise levels at 7 meters.

D. Post-test Requirements:

1. Make final adjustments.
2. Replace fuel and oil filters.
3. Check belt drive tensions.
4. Demonstrate proper operation of equipment, including automatic operation with control from automatic transfer switch, to Engineer and Owner.

3.04 MANUFACTURER'S SERVICES

A. Manufacturer's Representative: Present at Site or classroom designated by Owner, for minimum person-days listed below, travel time excluded:

1. 2 person-days for installation assistance and inspection.
2. 1 person-day for functional and performance testing and completion of Manufacturer's Certificate of Proper Installation.
3. 1/2 person-day for prestartup classroom or Site training.
4. 1/2 person-day for facility startup.
5. 1/2 person-day for post-startup training of Owner's personnel. Training shall not commence until an accepted detailed lesson plan for each training activity has been reviewed by Engineer.

©COPYRIGHT 2015 CH2M HILL

B. See Section 01 43 33, Manufacturers' Field Services, and Section 01 91 14, Equipment Testing and Facility Startup (to be completed).

END OF SECTION

©COPYRIGHT 2015 CH2M HILL

SECTION 26 32 13.17
DIESEL ENGINE GENERATORS

PART 1 GENERAL

1.01 DESCRIPTION

A. Scope:

1. Provide all labor, materials, equipment, and incidentals as specified and required to furnish and install 480-volt standby power generator system with appurtenances for complete and operational system.
2. The following generator system(s) are included in this Section:
   a. 200 KW, 250 KVA, 0.8 power factor, 120/208 volts, three-phase, four wires, sound-attenuated and weatherproof enclosure, engine generator, located at the site utility concrete pad.

B. Coordination:

1. Review installation procedures under other Sections and coordinate installation of items that must be installed with or before engine generator Work.
2. Notify other contractors in advance of installing engine generator sets to provide other contractors with sufficient time for installing items included in their contracts that must be installed with or before engine generator Work.

1.02 REFERENCES

A. The following is a list of standards which may be referenced in this section:

1. International Standards Organization (ISO):
   a. 8528, Reciprocating Internal Combustion Engine Driven Alternating Current Generator Sets.
   b. 9001, Quality Management Systems – Requirements.
2. National Electrical Manufacturers Association (NEMA): MG-1, Motors and Generators.
3. National Fire Protection Association (NFPA):
   a. 30, Flammable and Combustible Liquids Code.
   b. 37, Standard for the Installation and Use of Stationary Combustion Engines and Gas Turbines.
   c. 70E, Electrical Safety in the Workplace.
   d. 110, Standard for Emergency and Standby Power Systems.

©COPYRIGHT 2015 CH2M HILL SUPPLEMENTAL

4. Underwriters Laboratories, Inc. (UL):
   a. 142, Steel Aboveground Tanks for Flammable and Combustible Liquids.
   b. 508, Safety Standard for Industrial Control Equipment.
   c. 2200, Standard for Safety Stationary Engine Generator Assemblies (rated 600 volts or less).

1.03 QUALITY ASSURANCE

A. Qualifications:

1. Manufacturer:
   a. Shall have minimum of 5 years of experience of producing substantially similar equipment to that specified and shall document at least five installations in satisfactory operation for at least 5 years.
   b. Shall possess valid ISO 9001 certification.
   c. Supplier shall have complete parts and service facilities, factory-trained service staff available for 24-hour emergency service, and be authorized to administer the warranty for all components of engine generator systems.

B. Component Supply and Compatibility:

1. Obtain all equipment included in this Section regardless of component manufacturer from a single generator set manufacturer. Materials, equipment, and parts shall be new, of current production of a firm that manufactures the generator set as a matched system. Manufacturer shall have full responsibility for engine generator performance. Generator set manufacturer shall prepare or approve all Shop Drawings and other submittals for all components furnished under this Section.
2. Engine generator shall be factory-assembled. Verify in the factory that system is free from electrical and mechanical defects and conforms to the Contract Documents.

C. Regulatory Requirements: Comply with applicable provisions of authorities having jurisdiction, including the following:

1. Code of Federal Regulations (CFR), Title 40, Part 89, Control of Emissions from New and In-Use Nonroad Compression Ignition Engines, Subpart D Emission Test Equipment Provisions
2. Local Ordinances: Systems shall conform to Laws and Regulations relative to noise control and emissions.

©COPYRIGHT 2015 CH2M HILL

3. Local and State Building Codes: Installations shall conform to applicable codes including requirements of local fire marshals.
4. Permits: Obtain and pay for required permits, fees, and inspections by authorities having jurisdiction.

1.04 SUBMITTAL

A. Action Submittals: Submit the following:

1. Shop Drawings:
   a. Installation drawings specific to the Project.
   b. Bill of material for all equipment and spare parts.
   c. Electrical wiring and interconnection diagrams with all external connections identified.
   d. Control panel data shall include:
      1) Description of control features.
      2) Operator panel control switches and functions.
      3) Alarm and status displays.
      4) Provisions for remote start signal and remote status and alarm.
      5) Compliance with UL 508.
   e. Enclosure data shall include the following:
      1) Plan and elevation drawings showing overall dimensions, interior equipment arrangement, and working spaces.
      2) Construction details and hardware specifications.
      3) Exhaust piping and silencer mounting arrangement.
      4) Sound attenuation provisions and decibel levels.
   f. Fuel storage system data shall include:
      1) Day tank and storage tank arrangements.
      2) Storage capacity and hours of operation at rated load and 3/4 load.
      3) Alarm devices.
      4) Construction details including secondary containment provisions for fuel tank.
      5) Piping arrangements and details.
      6) Compliance with UL 142 and local codes.
   g. Provide the following relative to installation:
      1) Vibration isolators and anchor bolt requirements.
      2) Seismic restraint requirements.
      3) Provisions for fuel piping, electrical conduits, and other external connection requirements.

©COPYRIGHT 2015 CH2M HILL

2. Product Data:
   a. Manufacturer's literature, specifications, engineering data sheets, and standard drawings, necessary to fully describe the engine generator sets and appurtenances, and substantiate compliance with the Contract Documents. Information shall be annotated to clearly indicate ratings, features, and options specific to the Project.
   b. Generator data shall include:
      1) Listed to UL 2200.
      2) Heat rejection to room
      3) Combustion air requirements.
      4) Factory painting specifications.
   c. Engine data shall include:
      1) Fuel flow at rated load.
      2) Fuel consumption at 1/4, 1/2, 3/4, and full load.
      3) Engine Type: Naturally aspirated or turbocharged and after-cooled.
      4) Maximum exhaust backpressure.
      5) Silencer attenuation rating.
      6) Jacket water heater system.
      7) Gaseous emissions data measurements for hydrocarbons, carbon monoxide, particulate matter, and NOx conforming to 40 CFR 89, Subpart D.
   d. Alternator data shall include:
      1) Winding insulation class and temperature rise in accordance with NEMA MG-1-1.65.
      2) Standby and continuous KW/KVA ratings.
      3) Motor starting KVA at 90 percent sustained voltage.
      4) Surge KW capacity.
      5) Machine reactances and time constants.
   e. Starting system data shall include:
      1) Battery system.
      2) Battery charger.
      3) Cycle cranking configuration.
3. Testing Procedures:
   a. Source Quality Control Testing Procedures: For Units 501 kW and larger, provide factory testing procedures and dates at least 30 days prior to testing.
   b. Site Quality Control Testing Procedures: Testing procedures, provided at least 30 days prior to scheduled start of testing.

©COPYRIGHT 2015 CH2M HILL

B. Informational Submittals: Submit the following:

1. Manufacturer's Instructions: Manufacturer's unloading, rigging, installing, testing, and startup instructions. Information shall be specific to and indicate options for the Project.
2. Source Quality Control Submittals:
   a. For Units 500 kW and Smaller: Prototype testing certification.
3. Site Quality Control Submittals:
   a. Services to be performed by Supplier's representative, provided at least 30 days prior to start of Site testing.
   b. Report on results of testing at the Site, provided within 7 days of completion of testing.
4. Manufacturer Reports: Reports of visits to Site by Supplier's representative, including purpose of visit, problems encountered, and resolutions.
5. Qualifications Statements:
   a. Manufacturer: When requested by Engineer, submit data documenting compliance with qualifications requirements of the Contract Documents.

C. Closeout Submittals:

1. Operation and Maintenance Manuals: Provide Operations and Maintenance Data. Include the following information:
   a. Operating Instructions: Instructions for starting, stopping, protection of circuits, automatic controls, battery charging and safety considerations. Methods for adjusting speed, output voltage, and control timers.
   b. Performance Parameters: Provide nominal values and acceptable limits for output voltage, frequency, load, engine temperature, and oil pressure Include circuit drawings with component identifications for reference.
   c. Maintenance Instructions: Procedures for daily, weekly, monthly, and annual basis, or on an hours-run basis. Include guidance for selecting fuel oil, lubricating oil, use of water treatment additives, and anti-freeze.
2. Warranty Documentation.

D. Maintenance Materials:

1. Provide the following spare parts for each generator set:
   a. Two sets of primary and secondary fuel filters.
   b. One set of air filters.

©COPYRIGHT 2015 CH2M HILL

c. Two control circuit fuses of each size used.
d. Two sets of lube oil filters.
e. One set of fan belts.

1.05 WARRANTY

A. General Warranty: Special warranty specified in this Article shall not deprive Owner of other rights or remedies Owner may otherwise have under the Contract Documents and shall be in addition to, and run concurrent with, other warranties made by Contractor under the Contract Documents. Obligations of Contractor under the Contract Documents shall not be limited by provisions of the specified special warranty.

B. Special Warranty:

1. Provide manufacturer’s written warranty, running to the benefit of Owner, agreeing to correct or, at option of Owner remove or replace materials or equipment specified in this Section found to be defective during a period of 5 years after date of Substantial Completion or 3,000 hours of operation.
2. Products supplied under this Section shall be covered by a single warranty for the coverage period. Warranty shall provide for free replacement or repair of parts for 5 years or 3,000 hours of operation, and free labor for the first 2 years.

1.06 DELIVERY, STORAGE, AND HANDLING

A. Delivery:

1. Cover all generator air and exhaust openings with vapor inhibiting and water repellent material.
2. Deliver anchorage devices that are to be embedded in cast-in-place concrete in ample time to prevent delaying the Work.
3. Inspect equipment for shipping damage or loose parts upon delivery. Check for evidence of water that may have entered equipment during transit.
4. Notify Engineer of loss or damage to equipment or components. Replace loss and repair damage to new condition in accordance with manufacturer's instructions.

B. Handle equipment in accordance with manufacturer’s instructions. Furnish at least one copy of instructions with equipment at time of shipment.

©COPYRIGHT 2015 CH2M HILL

C. Storage:

1. Store equipment in a clean, dry location with controls for uniform temperature and humidity. Protect equipment with coverings and maintain environmental controls.
2. Store materials for easy access for inspection and identification. Keep all materials off the ground, using pallets, platforms or other supports. Protect equipment from corrosion and deterioration.

PART 2 PRODUCTS

2.01 SYSTEM REQUIREMENTS

A. Quantity and ratings of the systems shall be as indicated in Article Description.

B. Generators shall be rated for standby operation for duration of normal utility outage as defined by ISO 8528 for limited time operation. Generators shall be capable of operating for up to 500 hours per year, of which maximum of 300 hours is continuous running, and no overload is allowed.

C. Generator assemblies shall be UL 2200-listed, control panels shall be UL 508 listed and above-ground fuel tanks shall be UL 142 listed.

D. Generators shall be rated for the specified KW, without overload, at the following Site conditions:

1. Maximum Ambient Temperature: Minus 10 to 55 degrees C.
2. Altitude: 600 feet above mean sea level.

2.02 MANUFACTURERS

A. Provide generator systems of one of the following:

1. Caterpillar.
2. Cummins/ONAN.
3. Or equal.

2.03 ENGINE

A. Engine Type: Four-cycle compression ignition, water cooled diesel 1,800 rpm. Two-cycle engines are not acceptable.

©COPYRIGHT 2015 CH2M HILL

B. Engine Construction:

1. Steel-backed bearings.
2. Crank Case: Reinforced cast iron.
3. Crank Shaft: Forged alloy steel with hardened journals, finished and dynamically balanced.
4. Cylinder Head: Cast iron.
5. Pistons: Aluminum alloy with chrome faced rings.
6. Replaceable cylinder liners and valve seat inserts for engines rated over 200 horsepower.
7. Single-block construction. Bolted, multiple blocks are not acceptable.

C. Cooling System:

1. Radiator: Engine-mounted with engine-driven blower fan capable of cooling the engine under full load conditions in an ambient temperature of 104 degrees F without de-rating.
2. Thermostatic valve in jacket water outlet between radiator and engine to maintain proper jacket water temperature. Engine-driven pump to circulate water through cooling system.
3. Coolant: Fill system with 50 percent solution of ethylene glycol.
4. Coolant water temperature gauge.
5. High engine temperature shutdown.
6. Loss of coolant shutdown.
7. Fan guard.
8. Radiator face duct connection.
9. Engine coolant heaters, thermostatically controlled, capable of keeping jacket water at temperature not less than 90 degrees F in compliance with NFPA 110. Coolant heaters shall operate at 120 or 208 volts, single-phase. House contactor for controlling heater in NEMA 4X stainless steel enclosure mounted on unit.

D. Lubrication System: Positive displacement, mechanical, full pressure lube pump, full flow and bypass lubrication filters with replaceable spin-on canister elements, oil drain line with valves and dipstick oil level indicator.

E. Fuel System: Suitable for operation on No. 2 diesel fuel oil. System to include primary and secondary fuel filters, fuel/water separator, fuel priming pump, flexible fuel lines and fuel pressure gauge.

F. Governor: Electronic system to provide automatic isochronous frequency regulation. System dynamic capabilities to be controlled as function of engine temperature for fast stable operation at varying engine operating conditions.

©COPYRIGHT 2015 CH2M HILL

System to actively control fuel rate and excitation. Fuel rate to be regulated as function of starting, accelerating to start disconnect speed, accelerating to rated speed, and operating in various isochronous states.

G. Fuel Oil Sub-base Tank:

1. Construction: Heavy-gage steel primary tank, capacity for 24 hours of continuous run time, and welded steel secondary containment sized to contain 110 percent of primary tank capacity. Rust inhibitor coating inside and prime- and finish-coated outside, color to match generator set exterior paint.
2. Comply with the following:
   a. UL 142-listed and labeled.
   b. NFPA 30, NFPA 37, and NFPA 110.
   c. Codes for Needles, CA.
3. Fittings: NPT for fuel supply and return; two-inch diameter NPT for normal vent, manual fill and level alarm; NPT for emergency vents, level gauge, basin drain, and leak detection alarm.
4. Fuel level gauge and leak detector switch with alarm lights and contacts for remote annunciation of low fuel level and leak detection.
5. Mushroom-type cap and screen for normal vent openings and pressure relief-type caps for emergency vent openings.
6. Manufacturers: Provide sub-base tank of one of the following:
   a. Pryco, Inc.
   b. Tramont Corp.
   c. Or equal.

H. Air Supply/Exhaust Systems:

1. Heavy duty air cleaner with service indicator.
2. Flexible stainless steel exhaust connector.
3. Critical grade silencer with condensate drain ports.
4. Schedule 40 stainless steel piping. Insulate indoor piping to limit surface temperature to 50 degrees C.

I. Air Emissions:

1. Comply with United States Environmental Protection Agency (USEPA) standards for non-road engines and with state and local requirements.
2. Submit emissions data measurements for hydrocarbons (HC), carbon monoxide (CO), particulate matter (PM) and oxides of nitrogen (NOx) conforming to USEPA test procedures. Include USEPA not-to-exceed requirements for each pollutant.

©COPYRIGHT 2015 CH2M HILL

J. Starting System: DC system complete with engine mounted batteries, locally mounted charger and connecting cables between batteries and engine and between charger and batteries.

1. Batteries: Lead-acid or calcium/lead antimony, engine cranking type, rated in accordance with engine manufacturer's requirements for minimum of three 15-second cranking cycles at firing speeds without recharging, and to accommodate DC power requirements of control panel and other accessories requiring DC power.
2. Battery racks, cables, connectors, and disconnect switch.
3. Engine-mounted battery charging alternator and solid state voltage regulator.
4. Battery Charger:
   a. UL-listed, voltage regulated and equipped with float, taper and equalize charge settings.
   b. Analog DC ammeter and voltmeter; 12-hour equalize timer; AC and DC fuses.
   c. Loss of AC power, low battery voltage and high battery voltage alarm lights and contacts for remote annunciation; power on light.

2.04 ALTERNATOR

A. Construction: Synchronous generator, four-pole, 2/3 pitch, revolving field, self-ventilated, drip-proof construction, single bearing, dynamically balanced rotor with amortisseur windings to minimize voltage deviations and heating effects under unbalanced load conditions. Rotor directly connected to engine flywheel housing to ensure permanent alignment.

B. Winding Insulation Systems: Class H in accordance with NEMA MG-1. Temperature rise not to exceed 130 degrees C over 40 degrees C ambient at rated load. Epoxy coating for fungus resistance and abrasion protection.

C. Excitation System: Brushless construction. Excitation support system, permanent magnet type, to sustain 300 percent rated current for up to 10 seconds under short circuit conditions. Provide surge suppressors to protect against voltage spikes.

D. Voltage Regulator: Automatic solid state system to maintain generator output voltage within plus or minus 0.5 percent from no load to full load. Control voltage buildup, provide volts per Hertz regulation, protect from over-excitation, limit voltage overshoot on startup, and be environmentally sealed.

E. Provide anti-condensation heater to maintain temperature approximately 5 degrees F above ambient when generator is idle.

©COPYRIGHT 2015 CH2M HILL

2.05 CONTROL PANEL

A. Controls shall be in accordance with NFPA 110, Level 1, and control panel shall conform to the following:

1. Install control panel on vibration isolators with controls, instruments, lights, and devices necessary to manually and automatically start, stop, monitor, and protect the generator.
2. Controls shall be UL 508-listed and microprocessor-based with programmable adjustments. Control power from starting battery system. Panel shall include the following:
   a. Emergency stop pushbutton.
   b. Adjustable cycle cranking.
   c. KW, KVA, KVAR, and power factor meters.
   d. Engine coolant temperature readout.
   e. Engine oil pressure readout.
   f. Running time readout.
   g. RPM meter.
   h. Cool down timer.
3. Readouts and dry contact outputs shall be provided as required by NFPA 110, Level 1.
4. Provide output dry contacts for remote monitoring and control for the following:
   a. Generator running.
   b. Generator common warning alarm.
   c. Generator common shutdown alarm.
   d. Low day tank fuel if day tank is used (warning alarm).
   e. Low main tank fuel (warning alarm).
   f. Liquid leak in containments areas, including tank, double walled piping, and other fuel supply components (warning alarm).
5. Reset Control: Manual or remote restarts are not allowed and alarm lamps shall remain in alarm state until manual reset is accomplished even if alarm condition has been corrected.
6. Provide control panel anti-condensation space heater.

2.06 CIRCUIT BREAKERS

A. General: Provide main and exciter circuit breakers, sized for protecting the engine-generator.

B. Type: UL-listed, molded case with interchangeable electromechanical trip unit for sizes 225-amp and larger. Provide NEMA 1 enclosed units and mount on engine generator.

©COPYRIGHT 2015 CH2M HILL

2.07 ENCLOSURE

A. Provide engine-generator system with outdoor weatherproof enclosure where indicated in Article Description of this Section.

B. Non-walk-in enclosure shall be constructed of minimum14-gauge, reinforced sheet steel and shall attach directly to engine-generator base or sub-base fuel tank. Enclosure shall be factory assembled structure with key-lockable access doors for performing normal maintenance operations. Hardware and fasteners shall be stainless steel. Lube oil and coolant drains shall be extended to exterior of enclosure and terminated with drain valves, capped with pipe nipples on flanged connections.

C. Sound Attenuation: Engine-generator enclosure shall be sound-attenuated to reduce noise level to 75 dBA at a point 7 meters from engine-generator in free air environment, while operating at full load.

2.08 ACCESSORIES

A. Engine Generator Mounting:

1. Vibration Isolators: Steel springs in combination with rubber pads.
2. Vibration Isolation: Provide flexible connections between engine-generator set and fuel lines, exhaust system, electrical conduits, and other externally connected support systems.
3. Anchor Bolts: Type 316 stainless steel, conforming to Section 05 50 00, Metal Fabrications.
4. Template shall be furnished by manufacturer for setting anchorages devices, pipe sleeves, and nuts for mounting spring-type isolators to concrete foundation. Provide bolts and nuts for bolting isolators to channel frame base of engine-generator set.

2.09 FINISHING

A. Engine generator ferrous metal surfaces shall be prime-coated for corrosion protection and finish-painted in accordance with manufacturer’s standard painting system.

B. Color of finish paint to be selected by Engineer from manufacturer’s standard colors.

©COPYRIGHT 2015 CH2M HILL

2.10 SOURCE QUALITY CONTROL

A. Factory Tests:

1. Generators 500 Kw and Smaller: Provide results of tests and evaluations previously performed on prototype generator sets representative of the models to be provided, in accordance with NFPA 110.

PART 3 EXECUTION

3.01 INSPECTION

A. Examine the conditions under which the Work is to be installed and notify Engineer in writing of conditions detrimental to the proper and timely completion of the Work. Do not proceed with the Work until unsatisfactory conditions have been corrected.

3.02 INSTALLATION

A. Install engine generator system in accordance with the Contract Documents, approved Shop Drawings, and manufacturer's recommendations.

3.03 SITE QUALITY CONTROL

A. Site Testing: Test engine-generator set in accordance with NFPA 110. Provide all materials and equipment, including load banks, fuel, lubricants and material required for Site testing. Completely fill fuel tank at conclusion of testing.

B. Manufacturer's Services: Provide qualified, factory-trained serviceman to perform the following:

1. Supervise unloading and installation of equipment.
2. Instruct Contractor in the installation of equipment.
3. Inspect and adjust equipment after installation and ensure that equipment operates properly.
4. Instruct Owner's personnel in operating and maintaining the equipment.
5. Service representative shall make a minimum of one visit, with a minimum of 4 hours at the Site. The visit shall be for checking completed installation and startup of system. Representative shall revisit the Site as often as necessary until installation is acceptable.

END OF SECTION

©COPYRIGHT 2015 CH2M HILL

SECTION 26 12 13.18
THERMAL ELECTRIC GENERATOR SET

PART 1 GENERAL

1.01 REFERENCES

A. The following is a list of standards which may be referenced in this section:

1. ASTM International (ASTM): A335/A335M, Specification for Seamless Ferritic Alloy-Steel Pipe for High-Temperature Service.
2. Code of Federal Regulations (CRF): Title 40 Volume 18, Control of Emissions from New and In-Use Non-road Compression-Ignition Engines.
3. International Organization for Standardization (ISO): 9001, Quality Management Systems—Fundamentals and Vocabulary.
4. National Electric Manufacturer's Association (NEMA): 250, Enclosures for Electrical Equipment (1,000 Volts Maximum).
5. National Electrical Contractors Association (NECA): 404, Recommended Practice for Installing Generator Sets.
6. National Fire Protection Association (NFPA):
   a. 37, Installation and Use of Stationary Combustion Engines and Gas Turbines.
   b. 70, National Electric Code.
   c. 110, Emergency and Standby Power Systems.
7. SAE International (SAE): J1074, Engine Sound Level Measurement.
8. Underwriters Laboratories, Inc. (UL):
   a. 508, Industrial Control Equipment.
   b. 1236, Battery Chargers for Charging Engine-Starter Batteries.
   c. 2200, Stationary Engine Generator.

1.02 SUBMITTALS

A. Action Submittals:

1. Dimensioned outline drawing showing plan and elevations of generator system.
2. Paragraph by paragraph specification compliance statement, describing differences between specified and proposed equipment.
3. Generator weight, and anchoring requirements.
4. Catalog information and technical description; include materials for consumables.
5. Complete list of accessories provided.

©COPYRIGHT 2015 CH2M HILL

6. Performance curves showing generator efficiency (fuel consumed per kWh output), gross fuel consumption rate, and kW output at design rated output, one-half load, and one-quarter load. Account for design altitude, temperature corrections, load resistance, current and parasitic loads.
7. Circuit breaker data, including make model, catalog number, settings, and time current curves.
8. Control panel instrument identification inscriptions.
9. Sample guarantee.
10. Electrical schematic and wiring diagrams for the following:
    a. Generator control panel.
    b. Main generator.
    c. Voltage regulator.
    d. Inverter.
    e. Battery charging system.
    f. Enclosed electrical components.
    g. Spark Ignition System.
11. Schematic and diagram for Fuel System.
12. Noise data for exposed generator.

B. Informational Submittals:

1. Manufacturer's Certificate of compliance with specified EPA CARB emissions requirements in accordance with Section 01 43 33, Manufacturers' Field Services (to be completed).
2. Component and attachment testing seismic certificate of compliance as required by Section 01 45 33, Special Inspection, Observation, and Testing.
3. Factory Test Report.
4. Operation and Maintenance Data: As specified in Section 01 78 23, Operation and Maintenance Data (to be completed).
5. Description of parts and service availability.
6. Manufacturer's Certificate of Proper Installation, in accordance with Section 01 43 33, Manufacturers' Field Services (to be completed).
7. Special guarantee.

1.03 QUALITY ASSURANCE

A. Authority Having Jurisdiction (AHJ):

1. Provide the Work in accordance with NFPA 70, National Electrical Code (NEC). Where required by the AHJ, material and equipment shall be labeled or listed by a nationally recognized testing laboratory or other

©COPYRIGHT 2015 CH2M HILL

organization acceptable to the AHJ in order to provide a basis for approval under NEC.

2. Materials and equipment manufactured within the scope of standards published by Underwriters Laboratories, Inc. shall conform to those standards and shall have an applied UL listing mark.

B. Manufacturer Special Requirements:

1. Thermal Electric Generator set as a complete unit shall be listed to UL 2200 or submitted to an independent third party certification process to verify compliance as installed.
2. Manufacturer of generator set shall be certified to ISO 9001 and shall have third party certification verifying quality assurance in design/development, production, installation, and service, in accordance with ISO 9001.

1.04 SPECIAL GUARANTEE

A. Provide manufacturer's guarantee or warranty with no deductibles and including travel time, service hours, repair parts and expendables (oil, filters, antifreeze and other items required for the complete repair) with Owner named as beneficiary, in writing, as special guarantee. Special guarantee shall provide for correction of the Work specified in this Specification section found defective during a period of 2 years after the date of Substantial Completion. Duties and obligations for correction or removal and replacement of defective Work as specified in the General Conditions.

1.05 EXTRA MATERIALS

A. Furnish, tag, and box for shipment and storage the following spare parts and special tools:

Item	**Quantity**
Filter Kit	1 complete set
Two-pronged battery voltmeter	1 each
Spare fuses, if used in control panel	1 complete set
Spare indicating lamps (if applicable)	4 each type used
Touch up paint	1 quart each color used
Special tools required to maintain or dismantle engine generator set	1 complete set

©COPYRIGHT 2015 CH2M HILL

Item	Quantity
Spark Ignitor Module	1 complete set
Spark Electrode Assembly	1 complete set
Gaskets	2 complete sets

PART 2 PRODUCTS

2.01 MANUFACTURERS

A. Materials and equipment specified in this section shall be products of:

1. Global Thermoelectric; Model 8550 Thermoelectric Generator.

2.02 SERVICE CONDITIONS

A. Ambient Temperature at Air Intake: 120 degrees F maximum.

B. Ambient Temperature at Thermoelectric Generator: 120 degrees F maximum.

2.03 GENERAL

A. Ratings:

1. Rated at 550W at 24V, based on specified service conditions.
2. Voltage: 24V dc.

2.04 THERMOELECTRIC GENERATOR

A. General:

1. Manufacturer’s standard design, unless otherwise specified.
2. Generator parts designed with adequate strength for specified duty.

B. Type: Thermoelectric generator with unit mounted radiator fuel system and passive heat pipe/radiator cooling.

C. Spark Ignition System:

1. Type: Automatic, using 2-volt battery driven starter acting in response to control panel.
2. Starter shall be capable of 16 hours of continuous starting capability with a fully charged battery.

©COPYRIGHT 2015 CH2M HILL

3. Batteries:
   a. Sized as recommended by engine manufacturer.
   b. Sealed lead-acid type.
   c. Capable of providing 16 hours of continuous starting capability at 40 degrees C.
   d. Housed in acid-resistant frame isolated from generator main frame.
   e. Located such that maintenance and inspection of generator is not hindered.
   f. Complete with battery cables and connectors.
4. Battery Charger: Constant potential battery charger.

D. Fuel System:

1. Type: Natural gas.
2. Maximum inlet pressure of 30 psi (172 kPa).
3. Complete generator fuel system including all pressure regulators, strainers, control valve, pressure switch and thermocouple. The fuel system shall be plumbed to power unit for ease of site connections.
4. Fuel connections to generator: Flexible hose, suitable for application.

E. Voltage Limiter:

1. Solid state, sensing type.
2. Adjustable voltage level to plus or minus 5 percent.
3. Provisions for proper voltage limiting for existing or future generator loads.

F. Short Circuit Capabilities: Sustain 300 percent of rated current for 10 seconds for external fault without exceeding rated temperatures.

G. Main Circuit Breaker:

1. Type: Molded case.
2. Current Rating: As recommended by generator manufacturer.
3. Interrupt Rating: As recommended by generator manufacturer.
4. Trips: Thermal-magnetic with inverse time characteristics and adjustable magnetic pickup.
5. Enclosure:
   a. Rating: NEMA 250, Type 6.
6. Surge Protective Devices: Capacitors and arresters mounted in terminal compartment.

©COPYRIGHT 2015 CH2M HILL

2.05 BASEPLATE

A. Mount generator set on a rigid common steel base frame.

B. Base frame shall be stiffened to minimize deflections.

2.06 AUTOMATIC LOAD TRANSFER CONTROL

A. Automatic run controls shall be suitable for remote interface and control by automatic transfer switch. Generator shall start and run upon closure of a remote dry contact provided in Section 26 36 23, Automatic Transfer Switches.

2.07 CONTROL SYSTEM

A. Control Module:

1. Rating: NEMA 250, Type 4.
2. Instrument Identification: Face label or engraved, black, laminated plastic nameplate with white 1/4-inch-high letters, attached with Type 422 stainless steel screws.
3. UL 508 listed.
4. Tested to meet or exceed IEEE 587 requirements for voltage surge resistance.
5. Controls shall be solid-state, microprocessor based. Control panel shall be designed and built by generator manufacturer, or be a similar compatible model approved for use by generator manufacturer and shall provide operating, monitoring, and control functions for generator.

B. Instrumentation:

1. Type: Suitable for generator mounted environment.
2. Mounting: Nonshock mounted.
3. Alarm and Signal Contacts: Rated as recommended by generator manufacturer.
4. Fault Indication Lamps: Push-to-test type.
5. Meters: Digital with analog display, plus or minus 2 percent accuracy.

C. Operator Controls and Indicators:

1. Fuel Inlet Pressure Gauge.
2. Voltmeter.
3. Ammeter.
4. DC battery voltage.

 ©COPYRIGHT 2015 CH2M HILL

D. External Interfaces: Manufacturer's standard.

E. Functional Requirements:

1. LCD text display of alarm/event descriptions.
2. Cool-down Timer: Adjustable from 5 minutes to 60 minutes.
3. Alarms:
   a. Low battery voltage.
   b. High battery voltage.
   c. Battery charger failure.
   d. Shutdown.
4. Generator shutdown upon any of the following conditions:
   a. Overvoltage.
   b. Power Unit Overheat.

F. Special Requirements: Mount battery charger in control panel.

G. Power Requirements: 24 volts, Direct Current.

2.08 FACTORY FINISHING

A. Generator and Instrument Panel: Factory-applied primer and two finish coats of manufacturer's standard heat-resistant paint.

2.09 FACTORY TESTS

A. General: Conform to NFPA 110.

B. Steady Load Test: Test generator at steady load run of 60 minutes minimum duration at 100 percent full-rated load.

C. Transient Load Test: Conduct transient load test to demonstrate ability to meet load pickup and load release requirements specified.

D. Record and Report:

1. Load stability.
2. Fuel consumption.
3. Power output.

©COPYRIGHT 2015 CH2M HILL

PART 3 EXECUTION

3.01 INSTALLATION

A. Level and securely mount engine generator set in accordance with manufacturer's recommendations.

B. Install in accordance with NECA 404.

C. Where applicable, mount engine generator set on vibration isolators in accordance with isolator manufacturer's recommendations.

3.02 FIELD FINISHING

A. Touch up damaged coating with paint system compatible to existing.

3.03 FIELD TESTS

A. General: Conform to NFPA 110.

B. Performance Test:

1. Perform upon completion of installation.
2. Operate 2 hours minimum.
3. Manufacturer's representative shall make necessary adjustments.
4. Demonstrate ability of engine generator set to carry specified loads.
5. Demonstrate engine generator set safety shutdowns.

C. Test Report:

1. Record and report the following:
   a. Electric load on generator.
   b. Fuel consumption.
   c. Exhaust temperature.
   d. Ambient air temperature.
   e. Safety shutdown performance results.
   f. Noise levels at 7 meters.

D. Post-test Requirements:

1. Make final adjustments.
2. Replace fuel and oil filters.
3. Check belt drive tensions.

©COPYRIGHT 2015 CH2M HILL

4. Demonstrate proper operation of equipment, including automatic operation with control from automatic transfer switch, to Engineer and Owner.

3.04 MANUFACTURER'S SERVICES

A. Manufacturer's Representative: Present at Site or classroom designated by Owner, for minimum person-days listed below, travel time excluded:

1. 2 person-days for installation assistance and inspection.
2. 1 person-day for functional and performance testing and completion of Manufacturer's Certificate of Proper Installation.
3. 1/2 person-day for prestartup classroom or Site training.
4. 1/2 person-day for facility startup.
5. 1/2 person-day for post-startup training of Owner's personnel. Training shall not commence until an accepted detailed lesson plan for each training activity has been reviewed by Engineer.

B. See Section 01 43 33, Manufacturers' Field Services, and Section 01 91 14, Equipment Testing and Facility Startup (to be completed).

END OF SECTION

©COPYRIGHT 2015 CH2M HILL

SECTION 26 36 23
AUTOMATIC TRANSFER SWITCHES

PART 1 GENERAL

1.01 DESCRIPTION

A. Scope:

1. Contractor shall provide all labor, materials, equipment, and incidentals as shown, specified, and required to furnish and install automatic transfer switches.
2. Switches specified under this Section include enclosed types.

B. Related Sections: Section 26 05 02, Basic Electrical Requirements.

1.02 REFERENCES

A. The following is a list of standards which may be referenced in this section:

1. American National Standards Institute (ANSI): C37.90a, Surge Withstand Capability Test (formerly IEEE Standard 472-1974) – Ring Wave Test.
2. Institute of Electrical and Electronic Engineers (IEEE):
   a. 472, Guide for Surge Withstand Capability Tests.
   b. 446, Recommended Practice for Emergency and Standby Power Systems for Industrial and Commercial Applications.
   c. C62.41, Recommended Practice for Surge Voltages in Low Voltage AC Power Circuits.
3. National Electrical Manufacturers Association (NEMA):
   a. ICS1 109, Tests and Procedures.
   b. ICS10, AC Automatic Transfer Switches.
4. Underwriters Laboratories, Inc. (UL):
   a. 1008, Transfer Switch Equipment.
   b. 508, Industrial Control Equipment.
   c. 61010B-1 (previously UL 3111-1), Electrical Measuring and Test Equipment; Part 1: General Requirements.

1.03 QUALITY ASSURANCE

A. Regulatory Requirements: NEC 702, Optional Standby Systems.

©COPYRIGHT 2015 CH2M HILL

1.04 SUBMITTALS

A. Action Submittals: Submit the following:

1. Shop Drawings:
   a. Listing of transfer switches to be provided, including ratings and location of each.
   b. Equipment dimensions, and construction details of enclosures with conduit entry locations.
2. Product Data: Manufacturer's technical information for products proposed, including catalog cut sheets.
3. Test Procedures: At least 30 days prior to actual factory and field testing, submit proposed testing procedures, methods and apparatus.

B. Informational Submittals:

1. Source Quality Control Submittals: Submit reports of completed factory tests, including test results and procedures used for testing.
2. Field Quality Control Submittals: Submit reports of completed field tests, including test results and procedures used for testing.
3. Supplier Instructions: Manufacturer's written instructions for transporting, handling, storing, and installing the products.
4. Supplier Reports: Written report of each visit to Site by supplier's service representative.

C. Closeout Submittals:

1. Operation and Maintenance Data:
   a. Submit complete installation, operation and maintenance manuals including test reports, maintenance data and schedules, description of operation, and spare parts information.
   b. Manuals shall include record drawings of control schematics, including point-to-point wiring diagrams.
   c. Furnish operation and maintenance manuals.

D. Maintenance Material Submittals: Furnish the following:

1. Spare Parts and Extra Stock Materials: Provide as specified in this Section.

©COPYRIGHT 2015 CH2M HILL

1.05 DELIVERY, STORAGE AND HANDLING

A. Deliver products to the Site to ensure uninterrupted progress of the Work. Deliver anchor bolts and anchorage devices to be embedded in cast-in-place concrete in time to prevent delay of the Work.

B. Shipping sections shall be designed to be shipped by truck, rail, and ship. Indoor sections shall be bolted to skids.

C. Equipment shall be equipped to be handled by crane. Where cranes are not available equipment shall be suitable for skidding in place on rollers using jacks to raise and lower the sections.

1.06 MAINTENANCE

A. Spare Parts and Extra Stock Materials:

1. Furnish, tag, and box for shipment and long term storage the following spare parts for each switch:

Item	Quantity per Switch
Control relay	Two of each type used
Pilot light	Two per 10 of each type used
Fuses	Two set of each type and size used

2. Furnish a list of additional recommended spare parts for an operating period of 1 year. Describe each part, quantity recommended, and current unit price of each.
3. Package spare parts in suitable containers bearing labels clearly indicating contents and equipment with which they are to be used. Deliver spare parts at same time as switchgear.

PART 2 PRODUCTS

2.01 SYSTEM PERFORMANCE

A. Provide automatic transfer switches as specified for transferring loads from one power source to another.

©COPYRIGHT 2015 CH2M HILL

2.02 MANUFACTURERS

A. Manufacturers: Provide products of one of the following:

1. Russelectric, Inc.
2. ASCO Power Technologies.
3. Or equal.

2.03 SWITCH

A. Ratings:

1. Switches shall be capable of switching all classes of loads and rated for continuous duty when installed in a nonventilated enclosure.
2. Switches shall be rated with continuous ampere rating, number of poles and voltage as shown on Drawings.
3. Switches shall be rated to withstand the magnitude of fault current available without welding of contacts in compliance with ANSI C37.90a and IEEE C62.41.

B. Standards and Performance:

1. Switches shall comply with UL 1008, NEMA ICS10, and applicable requirements of NEC 700, IEEE 446, IEEE C62.41, UL 508, and UL 61010B-1. Switches shall be UL labeled with performance meeting or exceed the following:
   a. Temperature Rise: Measurements shall be made after overload and endurance tests.
   b. Withstand: UL listed to withstand magnitude of fault current available at switch terminals when coordinated with respective protective devices shown on Drawings at an X/R ratio of 6.6 or less. Main contacts shall not trip open or weld when subjected to fault currents.
      1) As a condition for approval, manufacturer of automatic transfer switches shall verify that switches are listed by Underwriters Laboratories, Inc., Standard UL 1008 with three-cycle short circuit closing and withstand as follows:

RMS Symmetrical Amperes at 480V ac	
Amperes	**3 Cycle Closing and Withstand**
100 to 400	42,000

©COPYRIGHT 2015 CH2M HILL

RMS Symmetrical Amperes at 480V ac	
Amperes	**3 Cycle Closing and Withstand**
600 to 800	65,000
1000 to 1200	85,000
1600 to 4000	100,000

2) During three-cycle closing and withstand tests, there shall be no contact welding or damage. Three-cycle tests shall be performed without using current limiting fuses, and oscillograph traces across main contacts shall be furnished to verify that contact separation has not occurred, and there is contact continuity across all phases after completion of testing. Test procedures shall be in accordance with UL 1008, and testing shall be certified by UL.
3) When conducting temperature rise tests to UL 1008, Supplier shall include post-endurance temperature rise tests to verify ability of transfer switch to carry full rated current after completing overload and endurance tests.

c. Dielectric: Measurements shall be made at 1960V ac RMS minimum following the withstand current rating test.
d. Transient Withstand: Control panel shall pass the voltage surge withstand test per IEEE 472 and voltage impulse withstand test per NEMA ICS1 109.

C. Construction:

1. Switch shall be double throw actuated by nonfused, momentarily energized operating mechanism(s).
2. Accomplish mechanical locking of main contacts in each direction without aid of latching solenoids, toggle mechanisms, or gear arrangements.
3. An overload or short-circuit shall not cause switch to go to a neutral position.
4. All transfer switch sizes shall use only one type of main operator for ease of maintenance and commonality of parts.
5. Switch shall be positively locked and unaffected by momentary outages, so that contact pressure is maintained at a constant value and contact temperature rise is minimized for maximum reliability and operating life.

©COPYRIGHT 2015 CH2M HILL

6. Main contacts shall be silver-tungsten composition. Switches shall have segmented, blow-on construction for high withstand and close-on capability and be protected by separate arcing contacts.
7. Inspection of contacts shall be possible from front of switch without disassembly of operating linkages and without disconnecting power conductors. Switches rated 600 amps and higher shall have front-removable and replaceable contacts. All stationary and moveable contacts shall be replaceable without removing power conductors or bus bars.
8. Transfer switch shall be equipped with a safe manual operator designed to prevent injury to operating personnel. Manual operator shall provide same contact-to-contact transfer speed as electrical operator to prevent a flash-over from switching main contacts slowly. Manual operation shall be safe even if electrical operator becomes energized and shall not require prior disconnection of operators or control wiring. Safe manual transfer shall be possible under all load conditions, energized or non-energized. Manual operator shall be an external type, operable through door of transfer switch enclosure. Operating personnel shall not be required to open transfer switch door to facilitate manual transfer. Manual operator shall be functional at all times, regardless of switch position or status. Manually initiated electrical operation does not meet intent of this requirement. Manual operator is not required on closed transition type switches.

D. Enclosure: Enclosed switches shall be NEMA 4X at minimum.

1. Standard and optional door-mounted switches and pilot lights shall be 30.5 mm industrial grade type or equivalent.
2. Provide door controls on a separate, removable plate that can be supplied loose for open type units.

E. Identification: Identify switches per Section 26 05 02, Basic Electrical Requirements.

2.04 TRANSFER SWITCHING FEATURES

A. Delay Transition (Open): Provide automatic delayed open transition transfer for each switch. Switch shall transfer load in delayed transition (break-before-make) mode. Transfer shall be accomplished with a user-defined interruption period in both directions adjustable from 1 second to 5 minutes in at least 15 increments.

©COPYRIGHT 2015 CH2M HILL

2.05 SEQUENCE OF OPERATION

A. When voltage on any phase of normal source is outside of specified parameters and after a programmable time delay period to allow for momentary dips, engine starting contacts shall close to start generating supply.

B. Transfer switch shall transfer to emergency source when generating supply has reached specified voltage and frequency on all phases.

C. After restoration of normal supply on all phases to within specified parameters, an adjustable time delay shall delay retransfer to normal to assure stabilization of normal supply. After expiration of the time delay period, transfer switch shall retransfer to normal. Should emergency supply source fail during the time delay period, switch shall bypass time delay and automatically return to normal source. Provide an adjustable time delay between opening of closed contacts and closing of open contacts during transfers to allow loads to be demagnetized.

D. After retransfer to normal, engine generator shall be allowed to operate at no load for a programmable period to cool down.

E. Should transfer to emergency source be initiated by test switch rather than an actual source failure, transfer from normal to emergency shall be as described above.

2.06 MICROPROCESSOR CONTROLLER

A. Each switch shall include a microprocessor controller for operation of the switch. Equip controller with the following:

1. Provide controller’s sensing and logic by a built-in microprocessor with ability to communicate serially through an optional serial communication module.
2. Controller shall provide a minimum of five selectable nominal voltages. Voltage sensing shall be true RMS type and be accurate to plus/minus one percent of nominal voltage. Frequency sensing shall be accurate to plus/minus 0.2 percent. Controller shall be capable of operating over a temperature range of minus 20 to plus 60 degrees C and storage from minus 55 to plus 85 degrees C.
3. Connect controller to transfer switch by an interconnecting wiring harness that shall include a keyed disconnect plug to enable controller to be disconnected from transfer switch for routine maintenance. Interfacing relays shall be industrial grade plug-in type with dust covers.

©COPYRIGHT 2015 CH2M HILL

Enclose controller with a protective cover. Mount controller internally but separately from transfer switch.

4. Customer connections shall be wired to a common terminal block.

B. Controller Display and Keypad:

1. Display and keypad shall be an integral part of controller for viewing available data and setting desired operational parameters. Operational parameters shall also be available for viewing and limited control through serial communications input port. The following parameters shall be adjustable:
   a. Nominal line voltage and frequency.
   b. Single- or three-phase sensing.
   c. Operating parameter protection.
   d. Transfer Operating Mode Configuration: Open transition, closed transition or delayed transition.
2. Instructions and controller settings shall be easily accessible, readable, and accomplished without using codes, calculations, or instruction manuals.

C. Controller Voltage, Frequency and Phase Rotation Sensing:

1. Voltage and frequency on both the normal and emergency sources shall be continuously monitored, with the following pickup, dropout, and trip setting capabilities values shown as a percent nominal unless otherwise specified:

Parameter	Sources	Dropout/Trip	Pickup/Reset
Under-voltage	Normal and Emergency, three-phase	70 to 98%	85 to 100%
Over-voltage	Normal and Emergency, three-phase	102 to 115%	2% below trip
Under-frequency	Normal and Emergency	85 to 98%	90 to 100%
Over-frequency	Normal and Emergency	102 to 110%	2% below trip
Voltage Unbalance	Normal and Emergency	5 to 20%	1% below dropout

©COPYRIGHT 2015 CH2M HILL

2. Repetitive accuracy of all settings shall be within plus/minus 0.5 percent over an operating temperature range of minus 20 to plus 60 degrees C.
3. Voltage and frequency settings shall be field adjustable in one percent increments, either locally with the display and keypad or remotely via serial communications port access.
4. When activated by keypad or through serial port, controller shall be capable of sensing phase rotation of both normal and emergency sources. Source will be unacceptable if phase rotation is not preferred rotation selected (ABC or CBA).
5. Source status screens shall be provided for both normal and emergency to provide digital readout of voltage on all three phases, frequency, and phase rotation.

D. Controller Time Delays:

1. Provide controller with time delays below. Time delay settings shall be adjustable over a range of zero to 9,999 seconds (factory set at 3 seconds) unless specified otherwise.
   a. Normal source failure, for engine starting.
   b. Transfer to emergency on availability of emergency source.
   c. Emergency source failure, retransfer on availability of normal source.
   d. Engine cool down following retransfer to normal.
   e. Time delay to control contact transition time during open transition transfer to either source.
   f. All timers can be bypassed via operation on processor’s keypad.
2. Provide adjustable time-delay on retransfer to normal. Time delay shall be automatically bypassed if emergency source fails and normal source is acceptable.
3. Provide a time delay activated output signal to drive external relays for selective load disconnect control. Controller shall have the ability to activate an adjustable zero to 5-minute time delay for one of the following modes:
   a. Prior to transfer only.
   b. Prior to and after transfer.
4. Time delay and sensing functions shall be field adjustable and operate with drift that does not exceed plus/minus 1 percent of set frequency, plus/minus 2 percent of set voltage, and plus/minus 10 percent of set time delay, over the temperature range of minus 20 to plus 70 degrees C.
5. Time delays shall be adjustable in one-second increments, except extended parallel time, that shall be adjustable in 0.01-second increments.

©COPYRIGHT 2015 CH2M HILL

6. Time delays shall be adjustable by using display and keypad or with a remote device connected to serial communications port. Time delay value displayed shall be time remaining until next event occurs.
7. For (open) delay transition transfer switches controller shall include the following built-in time delays for delayed transition operation:
   a. Zero to 5-minute time delay for load disconnect position for delayed transition operation.

2.07 ACCESSORY FEATURES:

A. Provide each switch with the following:

1. A two-position maintained-type test switch for test/automatic/ modes. Test position shall simulate a normal source failure.
2. An SPDT silver-tungsten contact, rated 5 amps at 30V dc, for a low-voltage engine start signal. Start signal shall prevent dry cranking of engine by requiring generator set to reach proper output and run for duration of cool down setting regardless of whether normal source restores before load is transferred.
3. Auxiliary contacts, rated 10 amps at 250V ac, consisting of one contact, closed when switch is connected to normal source and one contact closed when switch is connected to emergency source.
4. LED indicating lights (30.5 mm, industrial heavy duty, oil-tight, NEMA rated to match automatic transfer switch enclosure). One shall indicate when switch is connected to normal source (green) and one to indicate when the switch is connected to emergency source (red).
5. LED indicating lights (30.5 mm, industrial heavy duty, oil-tight, NEMA rated to match automatic transfer switch enclosure), energized by controller outputs. Lights shall provide true source availability of normal and emergency sources as determined by voltage sensing trip and reset settings for each source.
6. Provide the following built-in to controller, capable of being activated through keypad programming or serial port only when required by user:
   a. Provide ability to select “commit/no commit to transfer” to determine whether load should be transferred to standby generator if normal source restores before generator is ready to accept load.
   b. Provide terminals for a remote contact that opens to signal switch to transfer to emergency, and for remote contacts that open to inhibit transfer to emergency or retransfer to normal. Provide ability to activate both inhibit signals through keypad or serial port.

©COPYRIGHT 2015 CH2M HILL

c. Controller shall be capable of accepting a normally open contact that will allow transfer switch to function in a nonautomatic mode using an external control device.

d. Engine Exerciser: Controller shall provide an internal engine exerciser that allows user to program up to seven different exercise routines. For each routine, user shall be able to:

1) Enable or disable routine.
2) Enable or disable transfer of load during routine.
3) Set start time.
4) Time of day.
5) Day of week.
6) Week of month (first, second, third, fourth, last, alternate, and every).
7) Set duration of run.
8) At end of specified duration, switch shall transfer load back to normal and run generator for specified cool down period. A 10-year life battery that supplies power to real time clock in event of a power loss shall maintain time and date information.

7. System Status: Controller display shall include a “System Status” screen that shall be readily accessible from all points in the menu by a maximum of two key strokes. System status screen shall display a clear description of active operating sequence and switch position.

8. Self-Diagnostics: Controller shall contain a diagnostic screen for detecting system errors. Screen shall provide information on status input signals to controller that may be preventing completion of load transfer commands.

9. Communications Interface: Controller shall be capable of interfacing, through an optional full-duplex RS 485 serial communication module, with a network of transfer switches, within 4,000 feet (locally) and remotely through modem serial communications. Standard software specific for transfer switch applications shall be available from transfer switch manufacturer. Software shall include monitoring, control, and setup of parameters.

10. Data Logging: Controller shall have ability to log data and to maintain last 99 events, even during total power loss. The following events shall be time and date stamped and maintained in a nonvolatile memory:

a. Event Logging:

1) Date and time and reason for transfer normal to emergency.
2) Date and time and reason for transfer emergency to normal.
3) Date and time emergency source available.

©COPYRIGHT 2015 CH2M HILL

b. Statistical Data:
   1) Total number of transfers.
   2) Last 10 numbers of transfers due to source failure.
   3) Total number of hours both normal and emergency sources are available.

11. Terminate control wires with crimp lugs and identify with sleeve type markers. Provide suitable copper connector lugs for each service and load connections.

2.08 SOURCE QUALITY CONTROL

A. Perform manufacturer's standard factory tests that shall include:

1. Physical inspection and checking of components.
2. Mechanical operation and device functional tests.
3. Control operation and functionality tests.
4. Primary, control, and secondary wiring hi-pot tests.

PART 3 EXECUTION

3.01 INSPECTION

A. Examine conditions under which Work is to be performed and notify Engineer in writing of conditions detrimental to proper and timely completion of the Work. Do not proceed with the Work until unsatisfactory conditions have been corrected.

3.02 INSTALLATION

A. Install equipment so that sufficient access and working space is provided for ready and safe operation and maintenance.

B. Install equipment in accordance with Contract Documents and manufacturer's recommendations.

C. Securely fasten equipment to floors, walls, or other surfaces on which equipment will be mounted. Install freestanding switches on raised concrete pad at locations shown on Drawings. Install in accordance with manufacturer's recommendations.

©COPYRIGHT 2015 CH2M HILL

3.03 FIELD QUALITY CONTROL

A. Perform field testing and inspection of each automatic transfer switch. Testing and inspection shall be in accordance with manufacturer's recommendations and be performed by manufacturer's factory-trained representative, who shall inform Owner and Engineer when equipment has been correctly installed. Do not energize equipment without permission of Owner.

3.04 MANUFACTURER SERVICES

A. Manufacturer Services:

1. Manufacturer's factory-trained representative shall test the system as specified in Article Field Quality Control of this Section. Representative shall operate and test system in the presence of Engineer and verify that equipment conforms to requirements. These services shall be at least one 4-hour day at the Site.
2. Manufacturer's factory-trained representative shall adjust the system to initial settings specified in Article Microprocessor Controller of this Section.
3. Representative shall revisit the Site as often as necessary until all deficiencies are corrected, prior to readiness for final payment.
4. Provide services of manufacturer's factory-trained representatives to correct defective Work within 72 hours of notification by Owner during the Correction Period specified in the General Conditions as amended by the Supplementary Conditions.
5. Replacement parts or equipment installed during the Correction Period shall be equal to or better than the original.

B. Training: Furnish services of qualified factory trained specialists from manufacturer to instruct Owner's operations and maintenance personnel in recommended operation and maintenance of the products.

END OF SECTION

©COPYRIGHT 2015 CH2M HILL

SECTION 41 22 13.13
OVERHEAD CRANES

PART 1 GENERAL

1.01 REFERENCES

A. The following is a list of standards which may be referenced in this section:

1. American Society of Mechanical Engineers (ASME):
   a. B30.2, Overhead and Gantry Cranes (Top Running Bridge, Single or Multiple Girder, Top Running Trolley Hoist).
   b. B30.10, Hooks.
   c. B30.11, Monorails and Underhung Cranes.
   d. B30.17, Overhead and Gantry Cranes (Top Running, Single Girder).
   e. HST 1M, Performance Standard for Electric Chain Hoists.
   f. HST 2M, Performance Standard for Hand Chain Manually Operated Chain Hoists.
   g. HST 4M, Overhead Electric Wire Rope Hoists.
2. Crane Manufacturer’s Association of America (CMAA):
   a. 70, Electric Overhead Traveling Cranes.
   b. 74, Top Running & Under Running Single Girder. Electric Overhead Traveling Cranes.
3. National Electrical Manufacturer’s Association (NEMA):
   a. MG 1, Motors and Generators.
   b. 250, Enclosures for Electrical Equipment (1,000 volts maximum).
4. National Fire Protection Association (NFPA): 70, National Electrical Code (NEC).
5. Occupational Safety and Health Act (OSHA).
6. Underwriters Laboratories, Inc. (UL): 674, Electric Motors and Generators for Use in Division 1 Hazardous (Classified) Locations.

1.02 DESIGN REQUIREMENTS

A. Top-Running Multiple-Girder Overhead Traveling Crane: CMAA No. 70 and ASME B30.2 and B30.17.

B. Top-Running and Underhung Single-Girder Overhead Traveling Cranes: CMAA No. 74, and ASME B30.11.

C. Crane Service Class: CMAA No. 74.

©COPYRIGHT 2015 CH2M HILL

D. Trolley Service Class: CMAA No. 70.

E. Wire Rope Hoist Service Class: ASME HST 4M and CMAA No. 70 or No. 74.

F. Chain Hoist Service Class: ASME HST 1M and CMAA No. 70 or No. 74.

G. Hook: ASME 30.10.

H. Building Clearances: CMAA No. 70 and No. 74. Where bridge span exceeds 40 feet, increase clearance to 6 inches.

I. Stress and Safety Factors: CMAA No. 70 and No. 74. Properly select materials of construction for stresses to which subjected.

J. Safety of Operation, Accessibility, Interchangeability, and Durability of Parts: ASME B30.2.0 and OSHA requirements. Design equipment for environment operated.

K. Provide system, equipment, and components, including supports and anchorages, designed in accordance with General Conditions (to be completed).

1.03 SUBMITTALS

A. Action Submittals:

1. Shop Drawings:
   a. Make, model, weight, and horsepower of each equipment assembly.
   b. Complete catalog information, descriptive literature, materials of construction, and specifications on bridge drive system, end trucks, runway stops, footwalks and platforms, wheels, shafting, drive motor, gears and bearing, steel framing, trolley drive system, hoist motor and assemblies, hook, brakes, starting system, variable speed drive system, conductors (bus bar, festoon, cable reel), controls, remote control system, and accessories.
   c. Structural design calculations for runway beams and support system (e.g., brackets, hangers, bracing, and their attachments to building structural steel) and calculations of deflection and loads on building steel signed and stamped by a registered professional engineer of the State of California.

©COPYRIGHT 2015 CH2M HILL

d. Structural Details for crane runway beams, runway stops, brackets, hangers, bracing, and their attachments to building structural steel signed and stamped by a registered professional engineer of the State of California.
e. After reviewed by professional engineer that performed items c. and d. above, provide detailed Shop Drawings of crane runways, runway stops, brackets, hangers, bracing, and their attachments to building structural steel.
f. Power and control wiring diagrams, including terminals and numbers.
g. Motor nameplate data in accordance with NEMA MG 1 and include any motor modifications.
h. Factory finish system.

B. Informational Submittals:

1. Special shipping, storage and protection, and handling instructions.
2. Manufacturer's printed installation instructions.
3. Manufacturer's Certification of Compliance that the factory finish system is identical to the requirements specified herein
4. Suggested spare parts list to maintain the equipment in service for a period of 2 years Include a list of special tools required for checking, testing, parts replacement, and maintenance with current price information.
5. List special tools, materials, and supplies furnished with equipment for use prior to and during startup and for future maintenance.
6. Operation and Maintenance Data: As specified in General Conditions Operation and Maintenance Data.
7. Manufacturer's Certificate of Proper Installation, in accordance with Section General Conditions

1.04 ENVIRONMENTAL REQUIREMENTS

A. Temperature: Maximum 120 degrees F; minimum 30 degrees F.

B. Humidity: 30 percent.

C. Atmosphere: Mildly corrosive.

D. Ventilation: As shown on Drawings.

©COPYRIGHT 2015 CH2M HILL

1.05 EXTRA MATERIALS

A. Furnish for each remote control crane:

1. One transmitter.
2. One battery.

PART 2 PRODUCTS

2.01 GENERAL

A. Crane manufacturer to coordinate equipment requirements with steel structures, panels, drive motor, control panel, trolley and hoist, hoisting cable or chain, hook, crane mounted conductors, rails, stops, and electrical equipment controls.

B. Crane manufacturer to design, detail and provide the entire overhead crane system including the runway beam and its support system. This includes specific elements such as crane runway beams, runway end stops, brackets, hangers, bracing, and their attachments to building structural steel. Design calculations and details must be signed and stamped by a registered professional engineer of the State of California.

C. Where adjustable speed drives or remote control systems are required, crane manufacturer to furnish a coordinated operating system.

2.02 SUPPLEMENTS

A. See supplements to this section for additional requirements.

2.03 RUNWAY

A. Runway beams, brackets, and associated framework furnished under Section 05 12 00, Structural Steel Framing

B. Runway rails shall conform to cross-sections and weights per yard as specified in CMAA No. 70 or No. 74. Furnish rails, crane stops, and conductors by crane manufacturer.

C. Support underhung crane runway rails by a suspension system of hanger rods and joints which will permit runway rails to adjust to normal fluctuations of weight occurring as crane travels along rails. Design suspension system for minimal support rod bending stresses. Furnish slotted holes and shims for

©COPYRIGHT 2015 CH2M HILL

lateral and vertical rail adjustment. Brace one rail laterally to prevent excess motion of runway. Brace both rails longitudinally.

2.04 BRIDGE

A. Furnish girders from structural shapes proportioned to resist vertical, lateral, and torsional forces.

B. Construct bridge end trucks in accordance with CMAA No. 70 or No. 74. Furnish end trucks with rail sweeps and impact-absorbing bumpers.

C. Furnish runway stops attached to resist force applied when contacted and locate at limit of travel of bridge. Runway stops shall not engage the wheels.

D. Provide bridge travel limit switches, located approximately 5 feet from each end of bridge runway, or as required such that bridge travel speed is reduced to low speed prior to bridge engaging runway end-stops. Bridge drive speed past the limit switch locations shall be limited to low speed.

E. For top running cranes, provide footwalk of antislip plate, with toe guard, trussed handrails, and live load in accordance with CMAA No. 70 or CMAA No. 74 and ASME B30.2. Footwalk shall be full crane width and provide access to trolley, hoist, bus bar, and electrical boxes. Furnish platform to electrical festoons, including crossover walkway to full walkway width.

F. Wheels: Rolled or forged steel with treads and flanges heat treated, or cast iron wheels with chilled tread. Minimum tread hardness 200 Brinell. Clearances, wheel loads, and tolerances in accordance with CMAA No. 70 or No. 74. Wheel axles of alloy steel, machined and ground to receive inner bearing races. Use rotating axles and wheels mounted by press fit and keys.

G. Bridge driving machinery consisting of a cross shaft driven by an electrical motor through a gear speed reducer unit. Cross shaft, high-grade steel, turned, ground, polished, and adequately supported with self-aligning bearings. Shaft diameter to resist torsional strains when bridge is traveling under full load, or when stopped suddenly. Furnish oil-tight speed reducer gear case and support on common base with bridge brake.

H. Drive Gears: Helical, spur or herringbone type, rolled or cast steel, with machine cut teeth.

I. Bearings: Combination radial and thrust type, double row, spherical ball, either prelubricated and sealed or fitted for pressure lubrication. Pressure lubrication fittings for maintenance accessibility.

©COPYRIGHT 2015 CH2M HILL

J. Brakes: Electrically operated, adjustable, suitable for the service class indicated, with rated torque capacities as specified in CMAA No. 70 or CMAA No. 74.

2.05 TROLLEY

A. Frame: Welded steel, cast steel, or ductile iron construction, or a combination thereof. Design to control deflection of trolley assembly while transmitting the carrying load to bridge rails.

B. Drive shall consist of trolley drive shaft, driven by an electric motor through a gear reduction unit.

C. Wheels: Rolled or forged steel, accurately machined and ground to receive inner bearing races. Furnish alloy steel axles. Rotating axles with wheels mounted press fit and keys, or with keys alone. Minimum tread hardness 210 Brinell.

D. Drive Gears: Helical, spur or herringbone type, rolled or cast steel, with machine cut teeth.

E. Bearings: Combination radial and thrust type, double row, angular contact ball bearings or single-row tapered roller bearings. Bearings prelubricated and sealed, or fitted for pressure lubrication. Locate pressure lubrication fittings for accessibility during maintenance.

F. Brakes: Suitable for service class and rated torque capacities as specified in ASME B30.11. Furnish stops on trolley rails or beams.

G. For bridge spans greater than 40 feet provide trolley travel limit switches, located approximately 6 feet from each end of trolley rails/beams, or as required such that trolley travel speed is reduced to low speed prior to trolley engaging the trolley end-stops. Trolley drive speed past the limit switch locations shall be limited to low speed.

2.06 HOIST

A. Hoisting machinery shall consist of rope drum driven through gear reductions, load blocks, hook, hoisting rope, sheaves, and hoist braking. Drum size and length sufficient for minimum two turns of cable remaining on drum when hook is at lowest position. Furnish reeving as specified on supplement located at end of section. Provide right and left-hand grooved drum when two-part double reeving is specified.

©COPYRIGHT 2015 CH2M HILL

B. Rope drum and surrounding members constructed to minimize abrasion, crushing or jamming of hoist rope. Load blocks enclosed type. Hoisting rope extra flexible, improved plow steel wire rope, made especially for hoist service.

C. Hook: Construct with sufficient ductility to open noticeably before hook failure, equipped with safety latch, free to rotate 360 degrees with rated load and positively held in place with locknuts, collars or other devices.

D. Brakes: Mechanical and electric load brake and controls, designed in accordance with ASME 4M, and adjustable to compensate for wear.

E. Hoisting Machinery: Load chain wheel driven through gear reductions, an electric motor, a hand chain wheel, load blocks, sheaves, chain, hook, and hoist braking.

F. Chain: Nonjamming alloy type. Hand wheel shall have a guard that prevents chain slipping or jumping. Chain hoists shall have chain storage adequate for storing the full lift length of chain and shall be designed and located to avoid interference while hoisting.

G. Hook: Construct with sufficient ductility to open noticeably before hook failure, equipped with safety latch, free to rotate 360 degrees with rated load, and positively held in place with locknuts, collars or other devices.

H. Brakes: In accordance with ASME HST 1M and HST 2M, adjustable to compensate for wear, spring set, electric release load brake system, which releases load when drive motor is energized and holds load when the drive motor is de-energized.

2.07 ELECTRICAL

A. Furnish electrical equipment including motors, motor starters, pendant control, control systems, wire, and conduit. Bridge conductors may be removed for shipment. Crane wiring by crane supplier.

B. Electrical: In accordance with NFPA 70, NEC Article 610.

©COPYRIGHT 2015 CH2M HILL

C. Furnish motors compatible with adjustable frequency, variable speed, drive system, 40 to 1 speed range, suitable for hoist, trolley, and bridge drive applications. Controls with 120V ac, microprocessor based, pulsed width modulation design, withstand 45 degree C temperatures, housed in NEMA 250, Type 3R enclosure, unless otherwise specified, and supplied with 200 percent overcurrent protection.

1. Manufacturer:
   a. P & H Smartorque.
   b. Or approved equal.

D. Bridge and trolley conductor voltage drops from runway supply taps shall permit the crane motors to operate within voltage tolerances of plus or minus 10 percent, when building supply voltage is at plus or minus 5 percent of design voltage.

E. Enclosed Bus Bar Conductors: Steel strip enclosed in insulation. Collector sliding shoe type, with adjustable spring tension arms for contact between bus bar and controls.

F. Enclosed Bus Bar Conductors: Stainless steel clad hard copper enclosed in insulation. Collector sliding noncopper bearing, carbon shoe type, with adjustable spring tension arms for contact between bus bar and controls. Collector mechanism components aluminum, stainless steel, plastic, or other noncorrosive materials.

G. Festooned Flat Cable Conductors: Flexible cable, carried by heavy-duty roller, permanently lubricated roller bearings, with monorail support system that will dispense and retrieve flexible cable without twisting or tangling, and 20 percent spare conductor in each cable assembly.

H. Cable Reel Conductors: Flexible cable, housed on a circular wheel, counter-torque spring to dispense and retrieve cable, with sag not more than 3 feet below connection point on crane at maximum travel.

I. Grounding: External in accordance with NFPA 70, NEC Article 250.

2.08 CONTROLS

A. Furnish electric cranes with pendant control having momentary contact pushbuttons with a device which will disconnect motors from line on failure of power. Device shall not permit any motor to be restarted until controller handle is brought to the OFF position, or a reset switch or button is operated.

©COPYRIGHT 2015 CH2M HILL

Furnish with undervoltage protection as a function of each motor controller, or by magnetic main line contactor.

B. Controls: Fully magnetic, plain reversing type, housed in NEMA 250, Type 3R enclosure, with contactors of sufficient size and quantity for starting, accelerating, reversing, and stopping duty for specified crane service class.

C. Bridge and Trolley Drives: Soft start controls, 460/230V ac series device, installed in between drive motor and motor starter with torque and acceleration rate adjustable, suitable for crane service, and work in conjunction with crane controls.

D. Pushbutton Control Stations: Heavy-duty, oiltight, suspended from trolley, with control transformers to supply 120V ac power to pushbutton control station. Pushbutton enclosure supported with chain or wire rope. Control wire cable attached to support chain or wire rope at not more than 6-foot intervals. Furnish control station buttons for control of bridge, trolley, and hoist, ON/OFF main line contactor power switch which removes all power from crane and controls.

E. Remote Control System: Infrared, line-of-sight system, handheld and capable of operating all crane functions.

F. Control motions indicate direction of resultant crane motion. Furnish spring-loaded switch motions, with return to OFF position when switch is released and designed to prevent runaway crane situations.

G. Crane motions shall stop automatically when crane can no longer receive remote signals and designed to stop when control signal for any motion becomes ineffective.

H. Remote Control Crane Motions: Hook raise and lower, trolley movement, bridge movement, and crane power up and power. Furnish an EMERGENCY OFF pushbutton station which will disconnect main line power via a remote switch, and manual reset function to activate all motions after an EMERGENCY OFF event.

2.09 ACCESSORIES

A. Equipment Identification Plate: 16-gauge stainless steel with 1/4-inch die-stamped equipment tag number securely mounted in a readily visible location. Mounted on separate components of each crane assembly, to facilitate assembly in the field.

©COPYRIGHT 2015 CH2M HILL

B. Lifting Lugs: Equipment weighing over 100 pounds.

2.10 FACTORY FINISHING

A. Prepare and prime coat in accordance with manufacturer's standard.

2.11 SOURCE QUALITY CONTROL

A. Factory Inspections: Inspect control panels and equipment for required construction, electrical connection, and intended function.

B. Factory Tests and Adjustments: No-load run test on all equipment furnished.

C. Factory test report shall include certified Test Data Sheets.

PART 3 EXECUTION

3.01 INSTALLATION

A. Install in accordance with manufacturer's printed instructions.

B. Provide lubrication and lubrication fittings.

3.02 FIELD FINISHING

A. Equipment as specified in Section 09 90 00, Painting and Coating.

3.03 FIELD QUALITY CONTROL

A. Functional Test: Conduct on each crane.

1. Alignment: Test complete assemblies for proper alignment and connection, and quiet operation.

B. Performance Test:

1. Conduct on each crane.
2. Load tests in compliance with OSHA, ASME B30.11, and ASME B30.16.

©COPYRIGHT 2015 CH2M HILL

3.04 MANUFACTURER'S SERVICES

A. Manufacturer's Representative: Present at Site or classroom designated by Owner, for minimum person-days listed below, travel time excluded:

1. 1 person-day for installation assistance.
2. 1 person-day for prestartup classroom or Site training.
3. Training shall not commence until an accepted detailed lesson plan for each training activity has been reviewed by Owner and Engineer.

3.05 SUPPLEMENTS

A. The supplements listed below, following "End of Section," are a part of this Specification.

1. Remedy Produced Water Conditioning Plant Crane Data Sheet.
2. Remedy Produced Water Conditioning Plant Crane Dimension Sheet.
3. Remedy Produced Water Conditioning Plant Induction Motor Data Sheet.
4. Construction Headquarters Workshop Building Crane Data Sheet.
5. Construction Headquarters Workshop Building Crane Dimension Sheet.
6. Construction Headquarters Workshop Building Induction Motor Data Sheet.

END OF SECTION

©COPYRIGHT 2015 CH2M HILL

REMEDY PRODUCED WATER CONDITIONING PLANT
CRANE DATA SHEET

Project: Topock Groundwater Remediation Project
Manufacturer.: _____
Owner: Pacific Gas and Electric
Model No.: _____
Service: Remedy Produced Water Conditioning Plant
Number of Units: 1
Equip. Tag Number(s): _____
Rev/Date/By: _____/_____/_____

GENERAL REQUIREMENTS

Equipment Capacity: 2 tons
Method of Control: Pendant
Location of Control: Remedy Produced Water Conditioning Building
Equipment Location:
☒ Indoors ☐ Outdoors

Factory Testing:
☒ Required ☐ Not Required
Field Testing: ☐ Not required
☒ Required, functional and Performance

Power Supply: Electric
Voltage 460/230
Phase 3
Frequency 60 Hz

BRIDGE

Type:
☒ Single Girder ☐ Double Girder
☒ Top Running ☐ Underhung

Service Class (ANSI):
☐ A (standby) ☐ B (light)
☒ C (moderate) ☐ D (heavy)
☐ E (severe) ☐ F (continuous)

Speed (fpm): 30 to 40
☒ Constant Speed
☐ Variable Speed ☒ Hand Operated

Motor hp: 2
Main Runway Electric Conductors:
☐ Bus Bar ☒ Festoon
Bridge Drive System (CMAA):
☒ A1 ☐ A2 ☐ A3
☐ A4 ☐ A5 ☐ A6

TROLLEY

Type:
☒ Top Running ☐ Underhung

Service Class (ANSI):
☐ A (standby) ☐ B (light)
☒ C (moderate) ☐ D (heavy)
☐ E (severe) ☐ F (continuous)

Speed (fpm): _____ to _____
☒ Constant Speed
☐ Variable Speed ☒ Hand Operated

Motor hp: 0.3
Electric Conductors:
☐ Bus Bar ☒ Festoon ☐ _____
☐ Cable Reel

HOIST

Type:
☐ Electric, Wire Rope
☒ Hand Operated, Chain

Service Class (ANSI):
☐ H1 (standby) ☐ H2 (light)
☒ H3 (standard ☐ H4 (heavy)
☐ H5 (severe)

Speed (fpm): _____ to _____
☒ Constant Speed ☐ Two Speed
☐ Variable Speed

Motor hp: 5
Hook: See Crane Dimension Sheet
Hook Manufacturer: _____
Reeving: To be completed

SPECIAL REQUIREMENTS

Accessories:
☐ Service Platform
☐ Central Lubrication System
☒ OSHA Operating and Safety Devices

Remote Controls:
☐ Infrared, line-of-sight
☐ Frequency Modulated (FM)
Manufacturer: _____
☒ Extended Grease Fittings

Special Electrical Requirements:

See Crane Dimension Sheet for clearances, lift distances, and details.

©COPYRIGHT 2015 CH2M HILL

REMEDY PRODUCED WATER CONDITIONING PLANT
CRANE DIMENSION SHEET
Building Clearances for Top-Running Cranes

Project: Topock Groundwater Remediation Project

Owner: Pacific Gas and Electric

Equipment Name: Remedy Produced Water Conditioning Plant

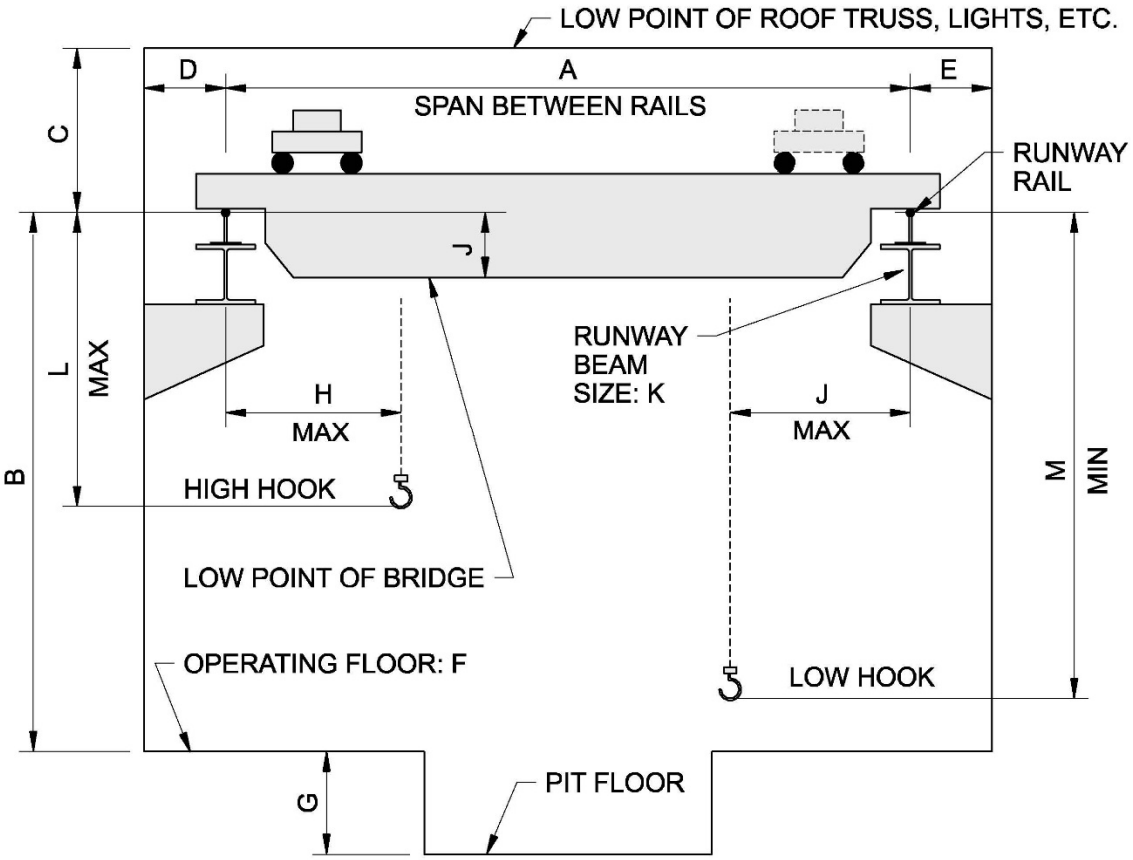

A: 50’-5”	E: 1’-1”	I: NA
B: 15’-0.35”	F: 640.5	J: NA
C: 2’-6.65”	G: 0’-6”	K: See Drawings
D: 1’-1”	H: NA	L: 6’-0”

Notes:

1. Runway Length: 34’-6”

2. Bridge Wheelbase, Centered on Bridge, Maximum: NA

©COPYRIGHT 2015 CH2M HILL

REMEDY PRODUCED WATER CONDITIONING PLANT
INDUCTION MOTOR DATA SHEET

Project: Topock Groundwater Remediation

Owner: Pacific Gas and Electric

Equipment Name: Remedy Produced Water Conditioning Plant

Equipment Tag Number(s):

Type: Squirrel-cage induction meeting requirements of NEMA MG 1

Manufacturer: For multiple units of the same type of equipment, furnish motors and accessories of a single manufacturer.

Hazardous Location: ☐ Furnish motors for hazardous (classified) locations that conform to UL 674 and have an applied UL listing mark.

Motor Horsepower: 5

Voltage: 460/230

Phase: 3

Frequency: 60 Hz

Synchronous Speed: _____ rpm

☒ Thermal Protection: _____

☐ Space Heater: 120 volts, single-phase

Guaranteed Minimum Efficiency at Full Load: _____ percent

Guaranteed Minimum Power Factor at Full Load: _____ percent

Service Factor (@ rated max. amb. temp.): ☐ 1.0 ☒ 1.15

Enclosure Type: TEFC

☐ Multispeed, Two-Speed: _____ / _____ rpm

Winding: ☒ One ☐ Two

Mounting Type: ☐ Horizontal ☒ Vertical

☐ Vertical Shaft: ☐ Solid ☐ Hollow

☐ Vertical Thrust Capacity (lb): Up _____ Down _____

☐ Adjustable Speed Drive: See Section 26 29 23, Low-Voltage Adjustable Frequency Drive System.

Operating Speed Range: _____ to _____% of Rated Speed

☐ Variable Torque

☒ Constant Torque

Additional Motor Requirements: ☐ See Section 26 20 00, Low-Voltage AC Induction Motors.

Special Features:

©COPYRIGHT 2015 CH2M HILL

CONSTRUCTION HEADQUARTERS WORKSHOP BUILDING CRANE DATA SHEET

Project: Topock Groundwater Remediation Project
Manufacturer.: _____
Owner: Pacific Gas and Electric
Model No.: _____
Service: Construction Headquarters Workshop Building
Number of Units: 1
Equip. Tag Number(s): _____
Rev/Date/By: _____/_____/_____

GENERAL REQUIREMENTS

Equipment Capacity: 3 tons
Method of Control: Pendant
Location of Control: Construction Headquarters Workshop Building
Equipment Location:
☒Indoors ☐Outdoors

Factory Testing:
☒Required ☐Not Required
Field Testing: ☐Not required
☒Required, functional and Performance

Power Supply: Electric
Voltage 208
Phase 3
Frequency 60 Hz

BRIDGE

Type:
☒Single Girder ☐Double Girder
☐Top Running ☒Underhung

Service Class (ANSI):
☐A (standby) ☐B (light)
☒C (moderate) ☐D (heavy)
☐E (severe) ☐F (continuous)

Speed (fpm): 0 to 100
☐Constant Speed
☒Variable Speed ☐Hand Operated

Motor hp: 2

Main Runway Electric Conductors:
☐Bus Bar ☒Festoon

Bridge Drive System (CMAA):
☒A1 ☐A2 ☐A3
☐A4 ☐A5 ☐A6

TROLLEY

Type:
☐Top Running ☒Underhung

Service Class (ANSI):
☐A (standby) ☐B (light)
☒C (moderate) ☐D (heavy)
☐E (severe) ☐F (continuous)

Speed (fpm): 0 to 65
☐Constant Speed
☒Variable Speed ☐Hand Operated

Motor hp: 0.3

Electric Conductors:
☐Bus Bar ☒Festoon ☐_____
☐Cable Reel

HOIST

Type:
☒Electric, Wire Rope
☐Hand Operated, Chain

Service Class (ANSI):
☐H1 (standby) ☐H2 (light)
☒H3 (standard ☐H4 (heavy)
☐H5 (severe)

Speed (fpm): 3.3 to 20
☐Constant Speed ☒Two Speed
☐Variable Speed

Motor hp: 5

Hook: See Crane Dimension Sheet
Hook Manufacturer: _____
Reeving: To be completed

SPECIAL REQUIREMENTS

Accessories:
☐Service Platform
☐Central Lubrication System
☒OSHA Operating and Safety Devices

Remote Controls:
☐Infrared, line-of-sight
☐Frequency Modulated (FM)
Manufacturer: _____
☒Extended Grease Fittings

Special Electrical Requirements:

See Crane Dimension Sheet for clearances, lift distances, and details.

©COPYRIGHT 2015 CH2M HILL

CONSTRUCTION HEADQUARTERS WORKSHOP BUILDING
CRANE DIMENSION SHEET
Building Clearances for Under-Running Cranes

Project: Topock Groundwater Remediation Project

Owner: Pacific Gas and Electric

Service: Construction Headquarters Workshop Building

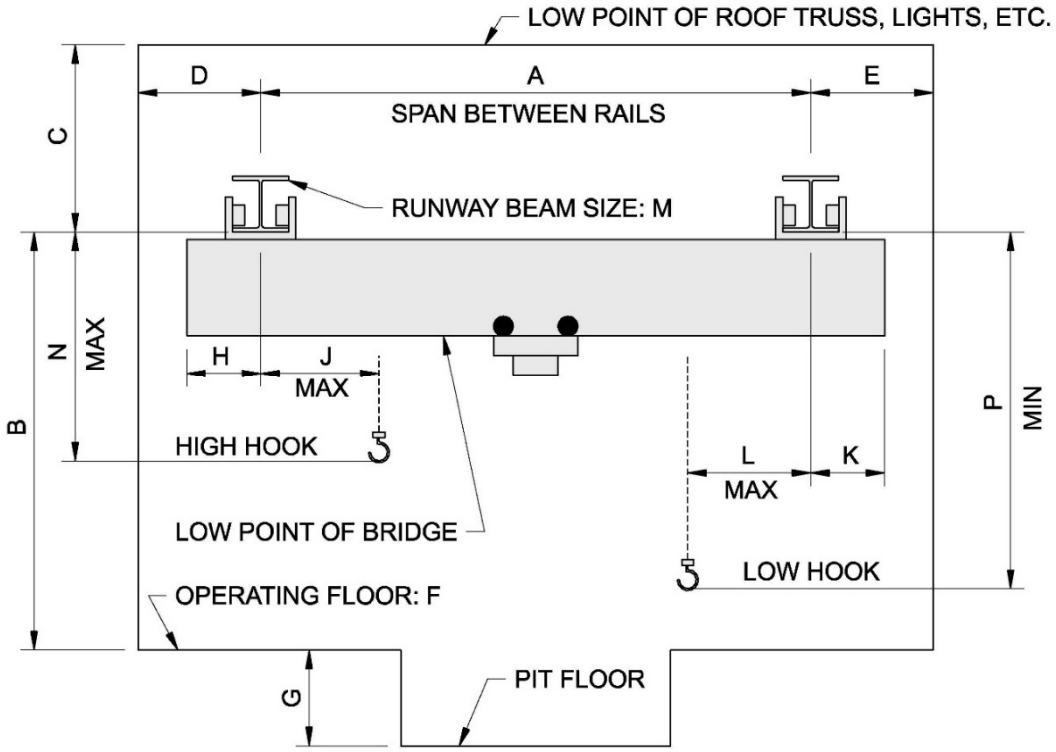

A: 19’-0”	F: 497’-6”	K: 1’-1-3/4”
B: 16’-10”	G: N/A	L: 6”
C: 2’-2”	H: 1’-1-3/4”	M: W14 – To be designed
D: N/A	I: N/A	N: 2’-8”
E: N/A	J: 6”	P: 14’-6”

Notes:

1. Runway Length: 22’-4”
2. Bridge Wheelbase, Centered on Bridge, Maximum: 5’-10 7/8”

©COPYRIGHT 2015 CH2M HILL

CONSTRUCTION HEADQUARTERS WORKSHOP BUILDING
INDUCTION MOTOR DATA SHEET

Project: Topock Groundwater Remediation

Owner: Pacific Gas and Electric

Equipment Name: Construction Headquarters Workshop Building

Equipment Tag Number(s):

Type: Squirrel-cage induction meeting requirements of NEMA MG 1

Manufacturer: For multiple units of the same type of equipment, furnish motors and accessories of a single manufacturer.

Hazardous Location: ☐ Furnish motors for hazardous (classified) locations that conform to UL 674 and have an applied UL listing mark.

Motor Horsepower: 5

Voltage: 208

Phase: 3

Frequency: 60 Hz

Synchronous Speed: _____ rpm

☒ Thermal Protection: _____

☐ Space Heater: 120 volts, single-phase

Guaranteed Minimum Efficiency at Full Load: _____ percent

Guaranteed Minimum Power Factor at Full Load: _____ percent

Service Factor (@ rated max. amb. temp.): ☐ 1.0 ☒ 1.15

Enclosure Type: TEFC

☐ Multispeed, Two-Speed: _____ / _____ rpm

Winding: ☒ One ☐ Two

Mounting Type: ☐ Horizontal ☒ Vertical

☐ Vertical Shaft: ☐ Solid ☐ Hollow

☐ Vertical Thrust Capacity (lb): Up _____ Down _____

☐ Adjustable Speed Drive: See Section 26 29 23, Low-Voltage Adjustable Frequency Drive System.

Operating Speed Range: _____ to _____% of Rated Speed

☐ Variable Torque

☒ Constant Torque

Additional Motor Requirements: ☐ See Section 26 20 00, Low-Voltage AC Induction Motors.

Special Features:

©COPYRIGHT 2015 CH2M HILL

SECTION 43 40 02
HIGH DENSITY POLYETHYLENE (HDPE) TANK

PART 1 GENERAL

1.01 REFERENCES

A. The following is a list of standards which may be referenced in this section:

1. American Society of Mechanical Engineers (ASME).
2. ASTM International (ASTM).

1.02 DEFINITIONS

A. HDPE: High Density Polyethylene.

1.03 DESIGN REQUIREMENTS

A. Design Loads: See data sheet.

B. Seismic Supports:

1. The tank manufacturer is responsible for designing the tank, tank seismic restraint straps/cables, and tank anchorage for both the tank base ring and the seismic restraint straps/cables. Tank anchorage design shall include anchor type, anchor size, anchor spacing and anchor embedment).
2. All design shall meet the seismic and wind loads identified in the current 2013 California Building Code and its associated design codes (2012 International Building Code and ASCE 7-10). The tank manufacturer's design of these elements per the applicable code should be done by a registered California Professional Engineer and calculations should be made available if requested by the Engineer during the construction submittal phase.

1.04 SUBMITTALS

A. Action Submittals:

1. Shop Drawings:
   a. Fabricators catalog information, descriptive literature, specifications, and identification of materials of construction, including complete resin system information.

©COPYRIGHT 2015 CH2M HILL SUPPLEMENTAL

b. Letter from resin manufacturer stating that selected resin is suitable for intended service.
c. Detailed fabrication drawings.
d. Tank data indicating equipment number, pressure rating, diameter, straight shell lengths, overall lengths, wall thickness, corrosion barrier thickness, and details of nozzle designs.
e. Tank capacity chart indicating gallons (cubic feet of volume) for each inch of depth and cumulative total from bottom
f. Fabricator's detailed requirements for tank foundations.

B. Informational Submittals:

1. Complete design calculations for tanks, supports, anchorage, and appropriate accessories.
2. Fabricator's Certificate of Compliance with fabrication requirements.
3. Quality Assurance Inspection.
4. Certification that supports and access nozzles have been coordinated with actual equipment being furnished.
5. Component and attachment testing seismic certificate of compliance as required.
6. Special shipping, storage and protection, and handling instructions.
7. Fabricator's printed installation and tank support instructions.
8. Manufacturer's Certificate of Proper Installation.

1.05 QUALITY ASSURANCE

A. Fabricator's Quality Assurance Supervisor: Minimum of 5 years' experience in producing substantially similar equipment, and shall be able to show evidence of at least five installations in satisfactory operation for at least 5 years.

B. Designer: Registered Professional Engineer licensed in California.

C. Independent HDPE Quality Assurance Inspector:

1. Minimum 5 years' experience as HDPE tank inspector.
2. Representing a corporately and financially independent organization that can function as an unbiased inspection authority.
3. Professionally independent of manufacturers, suppliers, and installers of systems being inspected.

©COPYRIGHT 2015 CH2M HILL

1.06 DELIVERY, STORAGE, AND HANDLING

A. In accordance with Section 01 61 00, Common Product Requirements (to be completed). In addition, prepare and protect tank for shipment as follows:

1. Mount tank on padded cradles if shipped horizontally or on a suitable skid if shipped vertically.
2. Protect flanged nozzles with wooden blinds bolted to flange and having a diameter of 2 inches greater than outside diameter of flange.
3. Provide either rigid plugs inside ends to prevent deflection or wooden boxes for unflanged components. Brace open end of tank with suitable stiffening member to prevent deflection.
4. Do not ship components or other pieces loose inside tank.
5. Load tank with at least 2 inches of clearance between tank (including fittings) and bulkheads, or bed of vehicle.
6. Regardless of mode of transportation, firmly fasten and pad components to prevent shifting of load or flexing of components while in transit.

1.07 SEQUENCING AND SCHEDULING

A. Do not ship tank from factory until Engineer’s review of Certification of Factory Testing is completed.

PART 2 PRODUCTS

2.01 SUPPLEMENTS

A. Some specific requirements relative to this section are attached as supplements at the end of section.

2.02 SERVICE CONDITIONS

A. Operating Pressure: Atmospheric.

2.03 MATERIALS

A. Resin: Suitable for intended service.

1. Premium grade and corrosion resistant.
2. Post-cure tank and appurtenances in accordance with resin manufacturer’s recommendation for time and temperature. Post-curing should be completed with warm-to-hot dry air, free of combustion products. Hot spots shall be avoided.

©COPYRIGHT 2015 CH2M HILL

3. Apply a white color coat after inspection of laminate has been completed.

B. Marking:

1. Identify each tank with fabricator's name, capacity in gallons, maximum temperature, design pressure/vacuum, specific gravity, pH, resin, minimum thickness, tank number, tank name, and date of manufacture.
2. Provide permanent marking. Seal decals, labels, etc., into laminate exterior with clear resin.
3. Calibration Strips:
   a. Translucent, 6 inches wide.
   b. Calibration: Multiples of 50 gallons or less.
   c. Stencil gallonage in 2-inch-high numerals.

C. Nozzles:

1. Gusset 4-inch or smaller nozzles with conical or plate type gussets. Larger nozzles shall be gusseted, if noted.
2. Finish flush with inside surface of tank, unless otherwise indicated.
3. Gaskets:
   a. Provide two per nozzle, 1/8-inch-thick, full-face elastomeric material having a hardness of Shore A60 plus or minus 5.
   b. Material shall be suitable for intended service.
4. Flanged Nozzles: Rated at 100 psi, with other dimensions and bolting corresponding to ASME B16.5 for 150-pound steel flanges.
5. Back face of flanges shall be spot-faced, flat and parallel to flange face of sufficient diameter to accept SAE metal washer under bolthead or nut.

D. Dip-Pipes: If provided, materials should conform to Section 40 50 00, Power Plant Piping Materials, and as per approved Shop Drawings.

2.04 APPURTENANCES

A. Supports:

1. Pipe Supports:
   a. Provide integral with tank wall for tank overflow pipes, loading pipes and recirculation pipes.
   b. Spacing of supports shall be as recommended by fabricator, but shall not be greater than 4 feet on center.

B. Lifting Lugs: Provide suitably attached for tank weighing over 100 pounds.

©COPYRIGHT 2015 CH2M HILL

C. Anchor Bolts: Type 316 stainless steel bolts, sized by tank manufacturer.

D. Manway Bolts: Type 316 stainless steel bolts

E. Heat Tracing: See HDPE Tank Schedule.

2.05 SOURCE QUALITY CONTROL

A. Factory Test Reports: Certify results, by signature, of the following:

1. Inspections: Results of hydrostatic testing.

PART 3 EXECUTION

3.01 INSTALLATION

A. In accordance with fabricator's written instructions.

B. Accurately place anchor bolts using templates furnished by fabricator.

3.02 FIELD QUALITY CONTROL

A. Functional Test:

1. Conduct on each tank.
2. Hydrostatic leak test with tank full of clean water. Allow water to stand for 24 hours to verify no leakage.

3.03 MANUFACTURER'S FIELD SERVICES

A. Provide fabricator's representative at Site for installation assistance, inspection and certification of proper installation for equipment.

3.04 SUPPLEMENT

A. The supplement listed below, following "End of Section," is part of this specification.

1. HDPE Tank Schedule.

END OF SECTION

©COPYRIGHT 2015 CH2M HILL

HDPE Tank Schedule								
Name of Tank	**Site Water Tank**	**Site Water Tank**	**25% Caustic Storage Tank**	**Coagulant Storage Tank**	**19% HCl Acid Tank**	**MW-20 Well Maint. Reagent Day Tank**	**TW Bench Well Maint. Reagent Day Tank**	**TW Bench Purge Water Return Tank**
Equipment Numbers	TANK 1	TANK 2	TNK-910	TNK-920	TNK-930	*T719	*T903	*T904
Rotationally or Contact-molded								
Maximum Capacity Measured to High Solution Level (gallons)	5,000 gal	5,000 gal	500 gal	30 gal (Note 1)	500 gal	1,000 gal	500 gal	1,000 gal
Installation (Vertical/Horizontal)	Vertical	Vertical	Vertical - Note 3	Vertical - Note 4	Vertical - Note 3	Vertical	Vertical	Vertical
Diameter (feet)	10’	10’	*	*	*	*	*	*
Straight Shell Height (feet)	*	*	*	*	*	*	*	*
Support (saddles, flat pad, legs)	*	*	*	*	*	*	*	*
Type of Bottom Head	Flat	Flat	Flat	Flat	Flat	Flat	Flat	Flat
Type of Top Head	Dished	Dished	Dished	Dished	Dished	Dished	Dished	Dished
Ladder Required (Yes/No)	No	No	No	No	No	No	No	No

©COPYRIGHT 2015 CH2M HILL

HDPE Tank Schedule								
Name of Tank	**Site Water Tank**	**Site Water Tank**	**25% Caustic Storage Tank**	**Coagulant Storage Tank**	**19% HCl Acid Tank**	**MW-20 Well Maint. Reagent Day Tank**	**TW Bench Well Maint. Reagent Day Tank**	**TW Bench Purge Water Return Tank**
Tank Location (indoor/outdoor)	Outdoor	Outdoor	Indoor	Indoor	Indoor	Indoor	Indoor	Indoor
Ambient Temperature Range (degrees F)	N/A	N/A	250-130°F	25-130°F	25-130°F	25-130°F	25-130°F	25-130°F
Exterior Loading (psf):								
Personnel Roof Loads	*	*	*	*	*	*	*	*
Platforms	*	*	*			*	*	*
Mixers	N/A	N/A	N/A	N/A	N/A	N/A	N/A	N/A
Pipe Supports	*	*	*	*	*	*	*	*
Operating Contents:								
Temperature (degrees F, not to exceed 180)	N/A	N/A	75°F	75°F	75°F	75°F	75°F	75°F
Chemical Composition	H_2O	H_2O	25% Caustic	Nalco Ultrion 8187	19% HCl	Note 2	Note 2	Note 2
Specific Gravity	N/A	N/A	1.28	1.34	1.09	Note 2	Note 2	Note 2

©COPYRIGHT 2015 CH2M HILL

HDPE Tank Schedule								
Name of Tank	**Site Water Tank**	**Site Water Tank**	**25% Caustic Storage Tank**	**Coagulant Storage Tank**	**19% HCl Acid Tank**	**MW-20 Well Maint. Reagent Day Tank**	**TW Bench Well Maint. Reagent Day Tank**	**TW Bench Purge Water Return Tank**
Concentration	N/A	N/A	25%	100%	19%	Note 2	Note 2	Note 2
pH Range	N/A	N/A	>14	3.5	<1	Note 2	Note 2	Note 2
Sight Glass Type (1 or 2)	*	*	*		*			
Sight Glass Tube Length	*	*	*		*			
Insulation/Heat Tracing (Yes/No)	No	No	Yes, Tracing	Yes, Tracing	No	No	No	No

NOTES:

*- Manufacturer to Specify
1. Capacity to be determined.
2. Tank contents to be determine.
3. Tank to be double wall
4. Provide tank stand and anchor to foundation.

©COPYRIGHT 2015 CH2M HILL

SECTION 43 40 15
FIBERGLASS REINFORCED PLASTIC (FRP) STORAGE TANKS

PART 1 GENERAL

1.01 RELATED DOCUMENTS

A. Drawings and general provisions of the Contract, including General Conditions, Supplementary Conditions (if included), and Division 1 Specifications Sections, apply to this Section.

1.02 SECTION INCLUDES

A. Storage tanks for sanitary sewer and remedy water storage.

1.03 SYSTEM DESCRIPTIONS

A. Sanitary Sewerage Storage Tank: Two fiberglass-reinforced plastic storage tanks.

B. Laboratory Sink Discharge Storage Tank: One fiberglass-reinforced plastic storage tank.

1.04 SUBMITTALS

A. Furnish documentation from the resin manufacturer that the resin materials, type of surface veil, and catalyst being used are suitable for the service conditions.

1.05 DESIGN REQUIREMENTS

A. Design all components of each system to be suitable for use with the storage of sewage and remedy water.

B. Remedy water storage tank shall be resistant to chemicals used in the laboratory.

C. Loading Conditions: Standard tank design shall meet the following criteria:

1. Internal Load: Tank shall be designed to withstand a 5 psig air-pressure test with a 5:1 safety factor. When tank is designed for onsite testing, Contractor shall individually test tank for leakage prior to installation. Maximum test pressure is 5 psig.

©COPYRIGHT 2015 CH2M HILL

2. Surface Loads: Tank shall withstand surface H20 axle loads when properly installed according to tank manufacturer's current installation manual and operating guidelines.
3. External Hydrostatic Pressure: Tank shall be capable of being buried in ground with 7 feet of overburden over the top of the tank, the hole fully flooded and a safety factor of 5:1 against general buckling.
4. Tank shall support accessory equipment such as inlet and outlet piping, effluent filter chamber, ladders and baffles, when installed according to tank manufacturer's current installation manual and operating guidelines.

1.06 QUALIFICATIONS

A. Manufacturer shall possess a current American Society of Mechanical Engineers (ASME) RTP-1 certification.

B. Mark fabrications with RTP symbol.

PART 2 PRODUCTS

2.01 STORAGE TANKS

A. Fiberglass-Reinforced Plastic (FRP) Tanks:

1. Manufacturers:
   a. Augusta Fiberglass.
   b. Belding Tank Technologies, Inc.
   c. Design Tanks, Inc. (formerly Raven Industries, Inc.).
   d. Edwards Fiberglass, Inc.
   e. Tankinetics, Inc.
   f. Viatec, Inc.
   g. Xerxes.
   h. Or as approved.
2. Type and Size: As indicated on Storage Tank Schedule.
3. Resin: Corrosion-resistant vinylester or isophthalic polyester thermoset resin selected by the manufacturer for the particular service condition.
4. Construction:
   a. Filament wound technique.
   b. Comply with ASME RTP-1.
   c. Inner Surface: 0.010 to 0.020 inch of resin-rich surface reinforced with glass surfacing mat or synthetic fibers.

©COPYRIGHT 2015 CH2M HILL

d. Interior Layer: Minimum of 0.100 inch laminate next to inner surface, reinforced with 20 percent by weight of noncontinuous glass strands.
e. Exterior Layer: Reinforced with continuous strand roving, filament wound in a pattern and at a minimum helix angle of 70 degrees from axial; glass content to be 65 to 70 percent by weight.

B. Appurtenances: Include the following as indicated in the Storage Tank Schedule.

1. Nozzles: Flanged and gusseted on FRP tanks.
   a. For level sensor, locate 18 inches from tank sidewall and away from fill line and areas of high turbulence.
2. Couplings: NPT; full or half type as appropriate for connections.
3. Vent: U- or V-type, with stainless steel screen.
4. Overflow: 90 degree bend and vertical pipe section, if required, terminating at the top elevation of the tank sidewall on the tank interior.
5. Manways:
   a. Top: Provide with fiberglass hinge and latch assembly.
6. Ladder assembly from floor level to top of tank; comply with OSHA.
7. Lifting lugs, hold-down lugs, and ladder mounting lugs.
8. Level Indicator: Float type with exterior indicator board and required mounting clips; indicator board to have 25 gallon increments and numerals every 100 gallons; wetted parts, float and guide wires of suitable stainless steel; sufficient stainless steel couplings in a flat mounting block on tank top, and guide wire anchor bar on inside bottom.
9. Siphon piping to allow complete suction drainage shall be supplied.
10. Tank Insulation: Two pound density polyurethane foam of either sprayed-on or of pre-fabricated board type, 2 inches thick. Provide a fiberglass laminate protective exterior casing over insulation. Resin to contain a pigment to protect insulation from ultraviolet rays.

C. Storage Tank Schedule:

	Sewage	**Sewage**	**Remedy Water**
Material	FRP	FRP	FRP
Capacity (gallons)	10,000	10,000	1,000

©COPYRIGHT 2015 CH2M HILL

	Sewage	**Sewage**	**Remedy Water**
Orientation	Horizontal	Horizontal	Horizontal
Nominal Diameter	8’	8’	4’
Straight Side Wall	31’- 6-1/2”	31’ – 6-1/2”	12’
Top Manway (size)	24” dia.	24” dia.	24” dia.
Fill Nozzle (size)	6”	6”	6”
Vent Nozzle (size)	4”	4”	4”
Overflow Nozzle (size)	6”	6”	6”
Pump Suction Nozzle (size)	4”	4”	4”
Drain Nozzle (size)	6”	6”	6”
Sight Gage Couplings (size)	None	None	None
Vent (size and type)	6”, U or V	6”, U or V	6”, U or V
Ladder Assembly	Yes	Yes	Yes
Lugs	Yes	Yes	Yes
Liquid Level Indicator (type)	Float	Float	Float
Tank Insulation	Yes	Yes	Yes

2.02 FINISHES

A. Provide equipment with a complete factory finish using the manufacturer’s standard industrial grade coatings.

B. Otherwise, protect all metal surfaces subject to corrosion whose use prohibits factory finishing.

2.03 CONCRETE AND GROUT FOR SUPPORT PADS

A. Concrete: Class I; follow Section 03 30 00, Cast-in-Place Concrete.

B. Grout: Nonshrink, noncorrosive; follow Section 03 62 00, Nonshrink Grouting.

©COPYRIGHT 2015 CH2M HILL

2.04 ANCHORAGE DEVICES AND FASTENERS

A. Of inherently corrosion-resistant materials and suitable for exposure to the chemicals specified for use in the area of installation.

B. Anchors: Type 316 stainless steel.

C. Hardware: Type 316 stainless steel.

PART 3 EXECUTION

3.01 INSTALLATION

A. Construct concrete anchors per manufacturer's requirements; follow Section 03 30 00, Cast-in-Place Concrete.

B. Comply with manufacturer's instructions.

C. Anchor, level, and grout equipment as required.

D. Coordinate the location of connections for piping and instruments.

E. Support heavy pipe, valves and fittings independently from the tank. Do not support by tank connections. Provide support as instructed by the tank manufacturer even if not shown on Drawings to prevent excessive forces on the tank.

3.02 MANUFACTURER'S STARTUP SERVICES

A. Provide a minimum of 8 hours for each system.

END OF SECTION

©COPYRIGHT 2015 CH2M HILL

BOD Appendix L
Operation and Maintenance Manual

Volume 1: Operation and Maintenance Plan

Appendix B: Standard Operating Procedures
(*On CD-ROM only*)

Appendix C: Select Equipment O&M Manuals
(*On CD-ROM only*)

O&M Plan Appendix B: Standard Operating Procedures (*On CD-ROM only*)

- PIPE-SOP-01: Pipeline Maintenance
- CHQ-SOP-01: Off-site trucking of lab and decon pad water
- CHQ-SOP-02: Decon pad O&M
- CHQ-SOP-03: Generator inspection/maintenance
- CHQ-SOP-04: Potable water delivery/O&M
- CHQ-SOP-05: Offsite trucking of sewage

Standard Operating Procedure
PG&E Topock Conveyance Systems
Operation and Maintenance Plan

Title: Conveyance System Inspection and Maintenance
Number: PIPE-SOP-01_Rev0

Creation Date: 2/2/2015

1 Background and Scope

Pacific Gas and Electric Company (PG&E) is implementing a groundwater remedy near the intersection of Park Moabi Road and Interstate 40, approximately 12 miles southeast of Needles, California at the PG&E Topock Compressor Station (TCS).

The objective of this Standard Operating Procedure (SOP) is to describe general procedures for inspection and maintenance of the groundwater conveyance systems. Maintenance methods may include pigging, flushing, and/or chemical application.

2 Drawing Numbers

- Freshwater Injection Well and Meter Vault Plans and Sections: M-02-01
- P&ID Injection Well: I-02-02
- TCS Loop Extraction Well Vaults Mechanical Details: M-03-03
- TCS Loop Injection Well Vaults Mechanical Details: M-03-04
- TCS Loop Injection Vaults Mechanical Sections: M-03-05
- TCS Loop East Ravine Extraction Wells P&ID: I-03-01
- TCS Loop Transwestern Bench Extraction Wells P&ID: I-03-02
- TCS Loop Injection Wells P&ID: I-03-03
- IRZ Single Screen Extraction Well Vaults Mechanical Details: M-04-03
- IRZ Dual Screen Extraction Well Vaults Mechanical Details: M-04-04
- IRZ Single Screen Injection Well Vaults Mechanical Details: M-04-05
- IRZ Dual Screen Injection Well Vaults Mechanical Details: M-04-06
- IRZ Dual Screen Injection Well Vaults Mechanical Sections: M-04-07
- IRZ Single Screen Extraction Wells P&ID: I-04-01
- IRZ Dual Screen Extraction Wells P&ID: I-04-02
- IRZ Single Screen Injection Wells P&ID: I-04-03
- IRZ Dual Screen Injection Wells P&ID: I-04-04

- Inner Recirculation Loop Injection Well Vaults Type 1 Mechanical Details: M-05-05
- Inner Recirculation Loop Injection Well Vault Type 1 Mechanical Sections: M-05-06
- Inner Recirculation Loop Type 1 Injection Wells P&ID: I-05-02
- MW-20 Bench Carbon Amendment Building P&ID, Sheets 1 and 4: I-06-01 and I-06-04
- Blowoff Details: C-07-08
- Transwestern Bench Carbon Amendment Building P&ID, Sheets 1 and 2: I-08-01 and I-08-02
- P&ID Influent Tank 1: I-11-01
- P&ID Conditioned Water Storage Tank Farm A Side: I-14-01

3 Equipment

- Appropriate personal protective equipment (PPE)
- Health and Safety Plan
- Lockout/tagout manual and tags
- Keys or other tools for opening vault(s)
- Vehicle for mobilization, if necessary
- Possible equipment needed for maintenance includes but is not limited to:
    - Tools and parts for connection assembly
    - Water truck
    - Soft swab pigs and medium density pigs appropriate for pipe size
    - Flowmeter
    - Pressure gauge
    - Transport polyethylene tank with valve on outlet (capacity to be determined based on pipeline size and anticipated liquid volume)
    - Chemical transfer hose
    - Water hose
    - 5-gallon buckets with lids and spouts
    - Trailer to haul tank
    - 55-gallon drums
    - Portable secondary containment
    - Chemical spill kit including vinyl sheeting
    - Eyewash supplies and safety shower
    - Trash pump
    - Additional pumps (as needed to provide motive force for pigging, flushing, chemical application)
    - Generator
    - Hose with camlock connections

4 Procedure

1. Preparatory Activities
   - 1.1 Verify the segment of pipe to be cleaned on the piping and instrumentation diagram (P&ID)
   - 1.2 Develop pipe segment-specific clearance checklist
   - 1.3 Take pipe segment out of service per approved clearance checklist
     1. Lockout/tagout the pipe segment following applicable sections of the lockout/tagout manual, as necessary
     2. Confirm that checklist is complete
   - 1.4 Fill temporary transport tank with freshwater, if required for maintenance event
     1. Hook up hose between freshwater supply source and transport tank
     2. Manually check that hose and connections are secure
        a. Secure any loose connections
        b. Connect safety whip checks
     3. Begin discharge to transport tank
        a. Monitor water level
        b. Stop discharge once tank is nearly full
        c. Close supply source valve
     4. Disconnect hose
        a. Drain hose
        b. Store hose properly
2. Mobilize to the work area
   - 2.1 Select a level parking area
   - 2.2 Establish work zone with cones
   - 2.3 Set up plastic sheeting around work area and under equipment
   - 2.4 Stage trucks and equipment to minimize slip, trip, fall hazards and allow access in and out of the work zone
3. Inspection
   - 3.1 Inspect the condition of the access hatch, if applicable

     CAUTION: The vault may contain biological hazards (e.g., rodents, snakes, scorpions). Use appropriate PPE and visually inspect vault to verify there are no biological hazards prior to proceeding with scope of work
   - 3.2 Carefully open the access hatch to the vault, if applicable
     1. Use proper lifting techniques
        a. Use two people to lower vault lids if needed
        b. Use legs instead of back to lift
   - 3.3 Visually check the vault, if applicable, for biological hazards

1. Contact maintenance supervisor if biological hazards are encountered
2. Await further instruction from maintenance supervisor

3.4 Visually inspect that the mechanical process piping is in good condition

1. If any items are noted as non-functioning inform the Maintenance Supervisor

4. Maintenance – Pigging

4.1 Delineate the pigging path by determining the pig launch and retrieval points (identified on P&IDs)

4.2 Valve off all intersecting pathways to prevent the pig from detouring to an incorrect location

1. Validate the valve off procedure by confirming that the flows at the launching point and retrieval point are equal

4.3 Confirm available flow and pressure is adequate to propel pigs

1. Connect additional temporary pump as necessary
2. Connect additional temporary tank as necessary

4.4 Attach the pig launcher to the wye fitting where pig will be launched from using camlock fittings

1. Launching pipe connection will include a flowmeter and pressure gauge for measuring flow and pressure

4.5 Connect hose from motive fluid/freshwater source to the pig launcher

CAUTION: Motive fluid line is under pressure. Do not open valve at this point

1. Connect hose to camlock connection of the launcher
2. Connect hose to the motive fluid line camlock connection
3. Connect safety whip line

4.6 Pig Receiver (Discharge)

1. Stage receiving tank(s) near the location where the pig receiver will be connected
2. Attach the pig receiver to the wye camlock fitting where the pig will be received
3. Connect the discharge hose of the pig receiver to receiving tank
4. Connect safety whip line

4.7 Double check connections are secure at both ends

4.8 Operation

1. First, run a soft swab pig equal to the size of the pipe
2. Slowly open valve on motive fluid line to start pig launcher
3. Monitor flow and pressure to correspond to the pipe size
4. Close valve on motive fluid line when pig reaches receiving tank
    a. The operator at the discharge side will notify the operator at the influent side if the receiving tank is within 25 percent (%) of being full
5. Second, run a soft swab pig one or two sizes larger than the pipe size. Run this pig size once or twice until dislodged sediment diminishes

6. Repeat Steps 3.8.b. through 3.8.d.
7. Finally, run a medium density poly pig one or two sizes larger than the pipe size. Run this pig size until dislodged sediment completely diminishes
8. Repeat Steps 3.8.b. through 3.8.d.
9. Containerize and properly dispose of effluent

5. Maintenance – flushing

5.1 Delineate the flushing path by determining the feed and retrieval points (identified on P&IDs)

5.2 Valve off all intersecting pathways to prevent from detouring to an incorrect location

1. Validate the valve off procedure by confirming that the flows at the feed point and retrieval point are equal

5.3 Confirm available flow and pressure is adequate for flushing

1. Connect additional temporary pump as necessary
2. Connect additional temporary tank as necessary

5.4 Connect hose from flushing fluid/freshwater source to the feed point

CAUTION: Flushing fluid line is under pressure. Do not open valve at this point

1. Connect hose to camlock connection
2. Connect hose to the conveyance line being cleared
3. Connect safety whip line

5.5 Receiving tank staging

1. Stage receiving tank(s) near the retrieval point
2. Connect the discharge hose to the retrieval point and the receiving tank
3. Connect safety whip line

5.6 Double check connections are secure at both ends

5.7 Operation

1. Slowly open valve on flushing fluid line to start flushing
2. Monitor flow and pressure
3. The operator at the discharge side will notify the operator at the influent side if the receiving tank is within 25% of being full
4. Close valve when flushing is complete

6. Maintenance – chemical application (no recirculation)

6.1 Pre-field verification

1. Obtain solution and, if applicable, pH requirements for event

6.2 Valve off all intersecting pathways to prevent chemical solution from detouring to an incorrect location (identified on P&IDs)

6.3 Chemical application

1. Verify that solution tank(s) has appropriate secondary containment

2. Stage secondary containment vinyl sheeting prior to setting up tank connections
3. Stage solution tank(s) near application point
4. Connect hose to solution tank(s) and solution pump
5. Connect hose to solution pump and application point
6. Connect safety whip check

6.4 Receiving tank staging

1. Stage secondary containment vinyl sheeting prior to tank setup
2. Stage receiving tank(s) near the retrieval point
3. Connect the discharge hose to the retrieval point and the receiving tank
4. Connect safety whip check

6.5 Double check connections are secure at both ends

6.6 Application

1. Slowly open valve(s) on solution line
2. Slowly turn on pump
3. Monitor flow and pressure
4. Turn off solution pump after required solution has been added

6.7 Post chemical application flushing

1. Connect hose from flushing fluid/freshwater source to the application point

CAUTION: Flushing fluid line is under pressure. Do not open valve at this point

   a. Connect hose to camlock connection
   b. Connect hose to the conveyance line being cleared
   c. Connect safety whip check

2. Double check connections are secure at both ends
3. Confirm that safety whip checks are installed on both ends
4. Slowly open valve on flushing fluid line to start flushing
5. Monitor flow and pressure
6. The operator at the discharge side will notify the operator at the influent side if the receiving tank is within 25% of being full
7. Close valve when flushing is complete

7. Maintenance – chemical application (recirculation)

7.1 Pre-field verification

1. Obtain solution and, if applicable, pH requirements for event

7.2 Connect hosing and adjust valving to connect pipelines for recirculation

7.3 Valve off all intersecting pathways to prevent chemical solution from detouring to an incorrect location (identified on P&IDs)

7.4 Chemical application

1. Verify that solution tank(s) has appropriate secondary containment
2. Stage secondary containment vinyl sheeting prior to setting up tank connections
3. Stage solution tank(s) near application point
4. Connect hose to solution tank(s) and solution pump
5. Connect hose to solution pump and application point
6. Connect the discharge hose to the retrieval point and the solution tank
7. Connect safety whip checks

7.5 Receiving tank staging

1. Stage secondary containment vinyl sheeting prior to tank setup
2. Stage receiving tank(s) near the retrieval point
3. Connect the discharge hose to the retrieval point and the receiving tank
4. Connect safety whip check

7.6 Double check connections are secure at both ends

7.7 Application

1. Slowly open valve(s) on solution line
2. Slowly turn on pump
3. Monitor flow and pressure
4. Monitor applicable parameters of the solution
    a. Add additional chemical if pH buffers out of desired parameters, as applicable
5. Turn off solution pump after specified recirculation time

7.8 Post chemical application flushing

1. Connect hose from flushing fluid/freshwater source to the application point

CAUTION: Flushing fluid line is under pressure. Do not open valve at this point

    a. Connect hose to camlock connection
    b. Connect hose to the conveyance line being cleared
    c. Connect safety whip check

2. Double check connections are secure at both ends
3. Confirm that safety whip checks are installed on both ends
4. Slowly open valve on flushing fluid line to start flushing
5. Monitor flow and pressure
6. The operator at the discharge side will notify the operator at the influent side if the receiving tank is within 25% of being full
7. Close valve when flushing is complete

8. Site clean up

8.1 Return pipe segment to service

1. Remove lockout/tagout as applicable

8.2 Close the vault, if applicable

1. Use proper lifting techniques
    a. Use two people to lower vault lids if needed
    b. Use legs instead of back to lift
2. Secure bolts

8.3 Properly dispose of sheeting used for staging of mechanical equipment in accordance with applicable site waste management practices

8.4 Pick up cones

8.5 Drive to MW-20 Bench or Remedy Produced Water Influent Tank Farm to transfer wastewater

9. Discharge to tank at MW-20 Bench or Remedy Produced Water Influent Tank Farm

9.1 Verify that receiving tank (Backwash Frac Tank TNK-*721 at MW-20 Bench or Influent Tank TNK-*201 at Remedy Produced Water Influent Tank Farm) is not receiving flow from other processes during the scheduled transfer

9.2 Verify that receiving tank has adequate space for discharge volume

9.3 Connect discharge tank trash pump using hose and camlock connections

9.4 Connect trash pump to receiving tank using hose and camlock connections

9.5 Place 5 gallon buckets under hose connections

9.6 Start trash pump to begin transfer

9.7 Discharge until tank is empty

9.8 Stop trash pump

9.9 Disconnect hoses draining water into the 5 gallon buckets

9.10 Dump the collected water into the MW-20 Bench or Remedy Produced Water Influent Tank Farm sump

9.11 Store equipment, tanks, and hose

9.12 Notify maintenance supervisor activities are complete

Standard Operating Procedure
PG&E Topock Moabi Regional Park CHQ Operation and Maintenance Plan

Title: Offsite Hauling of Wastewater

Number: CHQ-SOP-01_Rev0

Creation Date: 2/2/2015

1 Background and Scope

Pacific Gas and Electric Company (PG&E) is implementing a groundwater remedy near the intersection of Park Moabi Road and Interstate 40, approximately 12 miles southeast of Needles, California at the PG&E Topock Compressor Station (TCS).

The objective of this Standard Operating Procedure (SOP) is to describe the procedure to transfer accumulated non-hazardous wastewater from the 1,000 gallon remedy-produced water tank at the Construction Headquarters (CHQ) yard at Moabi Regional Park to a subcontracted tanker truck.

2 Drawing Numbers

- C-15-01: Park Moabi CHQ Site Layout
- C-15-03: Civil Details

3 Equipment

- Appropriate PPE
- Health and Safety Plan
- 5-gallon buckets
- Spill kit
- Water hose
- Wheel chocks to be placed behind tanker truck tires

4 Procedure

1. Loading site preparation

    1.1 Inspect subcontractor parking area for signs of settling or wear

1.2 Confirm that load-out hose is properly stored and not in the path of trucks entering the loading area

1.3 Visually inspect load-out hose for signs of wear

1.4 Confirm that necessary hoses and connections are present

2. Truck staging and hook-up

2.1 Instruct truck driver not to exceed 5 miles per hour (mph) while driving inside the CHQ yard

2.2 Confirm that driver and equipment meet job requirements

1. Verify that the driver has completed a pre-trip inspection on the truck and trailer
2. Verify that the driver currently driving the truck is the same driver who performed the pre-trip inspection

NOTE: If any deficiencies are discovered per Step 2.2, contact the Maintenance Supervisor before proceeding.

2.3 Use a spotter to direct truck driver during approach and alignment of truck near utility pad

1. Spotter to use hand signals to stop truck when the front of the trailer is in position
2. Ensure that there is enough room between the truck and fence for access

2.4 Place wheel chocks behind truck tires once truck is parked

2.5 Place 5-gallon bucket under trailer's inlet connection

2.6 Have driver hook up to the load-out hose

NOTE: Driver is responsible for:

- Attaching the load-out hose to the truck
- Making sure the truck tank is vented
- Determining how many gallons are to be loaded
- Disconnecting the load-out hose
- Operating the load valve (trailer valve) on the truck

Operator is responsible for:

- All valves upstream of the load-out hose
- Telling the driver how many gallons have been loaded
- Turning the remedy-produced water tank transfer pump on and off

2.7 Connect load-out hose to the dry-break coupling on the remedy-produced water tank

2.8 Manually check that pipe, hose, and connections are secure

1. Secure any loose connections

2.9 Place 5-gallon buckets under hose connections in transfer equipment

2.10 Have driver check truck valves and vents

2.11 Confirm with driver that truck is ready to receive water

2.12 Operator will turn on the remedy-produced water tank transfer pump

1. Turn the hand-off-auto switch on the pump panel to “AUTO”
2. Operator to visually inspect for leaks
3. Operator to monitor the level in the tank
4. Operator to instruct the driver when the tank is empty
5. Operator to place the hand-off-auto switch into the “OFF” mode to stop pump

2.13 Have driver close the trailer valve

3. Truck disconnection

3.1 Confirm that 5-gallon buckets are under hose connection points

3.2 Have driver open connection to truck (water will be in hose)

3.3 Have driver disconnect load-out hose from trailer valve

3.4 Disconnect load-out hose from the cam-lock coupling

3.5 Allow load-out hose to drain into 5-gallon buckets

3.6 Remove any adapters used

3.7 Have driver replace trailer valve cap or plug

3.8 Have driver close drip tray valve

3.9 Remove 5-gallon buckets from under connection points

3.10 Empty 5-gallon buckets into containment pad sump

3.11 Store equipment (hose, adapters, buckets) properly

4. Shipping documentation preparation (for offsite disposal as applicable)

4.1 Confirm that appropriate forms are filled out and signed

4.2 Confirm that shipping documentation is complete and signed

4.3 Confirm that shipping documentation number is recorded

4.4 Provide driver with appropriate copies

5. Truck demobilization

5.1 Work with driver to inspect that truck is in safe condition

5.2 Confirm that hose, buckets, and other equipment have been removed from path of truck exiting the loading area

5.3 Unchock tires

5.4 Remind driver to stay under 5 mph while inside the CHQ yard

5.5 Instruct driver to exit the utility pad area

5.6 Spot driver out to the main road

6. Post-transfer system checks

6.1 Scan/file paperwork/shipping documentation (as applicable)

Standard Operating Procedure
PG&E Topock Moabi Regional Park CHQ Operation and Maintenance Plan

Title: Truck Decontamination
Number: CHQ-SOP-02_Rev0

Creation Date: 2/2/2015

1 Background and Scope

Pacific Gas and Electric Company (PG&E) is implementing a groundwater remedy near the intersection of Park Moabi Road and Interstate 40, approximately 12 miles southeast of Needles, California at the PG&E Topock Compressor Station (TCS).

The objective of this Standard Operating Procedure (SOP) is to describe the procedure for decontamination of construction- or operation and maintenance-related trucks at the decontamination pad located in the Construction Headquarters (CHQ) yard at Moabi Regional Park. Water transfer from the decontamination pad sump to a 1,000 gallon remedy-produced water tank is automated.

2 Drawing Numbers

- C-15-01: Park Moabi CHQ Site Layout
- C-15-03: Construction Headquarters Piping Plan
- S-15-19: CHQ Decontamination Pad Plans and Details

3 Equipment

- Appropriate PPE
- Health and Safety Plan
- Spill kit
- Water hose
- Wheel chocks to be placed behind truck tires

4 Procedure

1. Decontamination pad preparation
    - 1.1 Inspect pad for signs of settling or wear
    - 1.2 Confirm that necessary hoses are present
2. Truck staging and hook-up

2.1 Instruct truck driver not to exceed 5 miles per hour (mph) while driving inside the CHQ yard

2.2 Confirm that driver and equipment meet job requirements

1. Verify that the driver has completed a pre-trip inspection on the truck and trailer
2. Verify that the driver currently driving the truck is the same driver who performed the pre-trip inspection

NOTE: If any deficiencies are discovered per Step 2.2, contact the Maintenance Supervisor before proceeding.

2.3 Use a spotter to direct truck driver during approach and alignment of truck in the middle of the decontamination pad

1. Spotter to use hand signals to stop truck when the front of the trailer is in position

3. Decontamination

3.1 Verify tank level within 1,000 gallon buried remedy-produced water tank prior to decon to confirm there is available space for decon water

3.2 Verify the sump water level is drained (sump pump automatically runs)

3.3 Use potable water from 5,000 gallon potable water tanks in the utility area to decontaminate truck

1. Connect hose to the yard hydrant fed from the potable water tanks
2. Spray exterior of truck to remove dust and debris
3. Spray under carriage of vehicle
4. Spray wheelwells and behind tires

3.4 Wait for water to cease dripping from truck

1. Verify tires are dry and will not track out of the decontamination area

3.5 **IF** the sump level rises to the high level setpoint for the pump **THEN** verify the pump is operational and discharging to the 1,000 gallon buried remedy-produced water tank

4. Truck demobilization

4.1 Work with driver to inspect that truck is in safe condition

4.2 Confirm that hose, buckets, and other equipment have been removed from exit path of truck from loading area

4.3 Unchock tires

4.4 Remind driver to stay under 5 mph while inside the CHQ yard

4.5 Instruct driver to exit the decontamination pad heading north

4.6 Spot driver during exit to the main road

Standard Operating Procedure
PG&E Topock Moabi Regional Park CHQ Operation and Maintenance Plan

Title: Generator Inspection
Number: CHQ-SOP-03_Rev0

Creation Date: 2/2/2015

1 Background and Scope

Pacific Gas and Electric Company (PG&E) is implementing a groundwater remedy near the intersection of Park Moabi Road and Interstate 40, approximately 12 miles southeast of Needles, California at the PG&E Topock Compressor Station (TCS).

The objective of this Standard Operating Procedure (SOP) is to describe the procedure for inspecting the backup generator located at the Construction Headquarters (CHQ) yard at Moabi Regional Park. Inspections will be conducted on a weekly basis. Personnel conducting inspections and maintenance must be qualified persons in regards to NFPA 70E for arc flash. Additional information can be found in the health and safety plan.

2 Drawing Numbers

- C-15-01: Park Moabi CHQ Site Layout
- C-15-04: Civil Details

3 Equipment

- Appropriate PPE
- Health and Safety Plan
- Spill kit
- 5-gallon buckets
- 55-gallon drum

4 Procedure

1. Mobilize to utility pad enclosure
   - 1.1 Have spill kit in the event of a noted spill
   - 1.2 Open fence to utility pad area
2. Visually inspect generator
   - 2.1 Walk around entire unit

2.2 Check for:

1. Leaks along equipment surfaces
2. Accumulated liquid on the ground
3. Signs of vandalism

CAUTION: Prior to accessing the generator interior qualified personnel shall put on arc flash PPE

4. Open panels or access doors

2.3 Check fuel tank

1. Verify fuel gauge level
   a. Schedule refueling through maintenance supervisor if level is below ½ tank
2. Collect a fuel sample and analyze for water and bacterial growth annually if fuel stored for longer than 1 year
3. Inspect fuel tank secondary containment
   a. Check for accumulated liquid
   b. Drain any accumulated liquid into 5-gallon bucket
      (1) Dispose of any collected water (no oil contamination) in the decontamination pad sump
      (2) Collect any oil-contaminated water in appropriately-labeled 55-gallon drum
   c. Clear secondary containment of any debris

2.4 Check battery

1. Verify distilled water level in battery cells, if applicable
2. Inspect battery terminals for evidence of corrosion or tightness

2.5 **IF** a leak is detected **THEN**:

1. Immediately alert maintenance supervisor of leak
2. Apply spill kit to spill area
3. Await further instruction from maintenance supervisor

3. Start generator manually

3.1 **IF** generator fails to start **THEN**:

1. Immediately alert maintenance supervisor
2. Await further instruction from maintenance supervisor

4. Complete load testing per manufacturer's recommendations
5. Complete housekeeping tasks

5.1 Clear any debris from utility pad area

5.2 Check condition of traffic bollards around tank

1. Photograph safety bollards that appear to have been hit or damaged
2. Alert maintenance supervisor of damaged bollards

6. Demobilize from utility pad area

    6.1 Report findings to maintenance supervisor

Standard Operating Procedure
PG&E Topock Moabi Regional Park CHQ Operation and Maintenance Plan

Title: Potable Water Delivery
Number: CHQ-SOP-04_Rev0

Creation Date: 2/2/2015

1 Background and Scope

Pacific Gas and Electric Company (PG&E) is implementing a groundwater remedy near the intersection of Park Moabi Road and Interstate 40, approximately 12 miles southeast of Needles, California at the PG&E Topock Compressor Station (TCS).

The objective of this Standard Operating Procedure (SOP) is to describe the procedure for a subcontracted delivery truck to enter the Construction Headquarters (CHQ) yard at Moabi Regional Park and discharge potable water from the truck to the potable water tank.

2 Drawing Numbers

- C-15-01: Park Moabi CHQ Site Layout
- C-15-04: Civil Details

3 Equipment

- Appropriate PPE
- Health and Safety Plan
- 5-gallon buckets
- Water hose
- Wheel chocks to be placed behind delivery truck tires

4 Procedure

1. Loading site preparation
   - 1.1 Inspect subcontractor parking area for signs of settling or wear
   - 1.2 Confirm that necessary hoses and connections are present
2. Truck staging and hook-up

2.1 Verify the truck that arrives says Potable Water on it

1. Request paperwork to verify water is potable

2.2 Instruct truck driver not to exceed 5 miles per hour (mph) while driving in the CHQ yard

2.3 Confirm that driver and equipment meet job requirements

1. Verify that the driver has completed a pre-trip inspection on the truck and trailer
2. Verify that the driver currently driving the truck is the same driver who performed the pre-trip inspection

NOTE: If any deficiencies are discovered per Step 2.2, contact the Maintenance Supervisor before proceeding.

2.4 Use a spotter to direct truck driver during approach and alignment of truck near potable water tank

1. Spotter to use hand signals to stop truck when the front of the trailer is in position
2. Ensure that the truck is not blocking access

2.5 Establish a work zone to ensure traffic hazards in the area are mitigated

2.6 Place wheel chocks behind truck tires once truck is parked

2.7 Place 5-gallon bucket under trailer's outlet connection

2.8 Have driver hook up to the load-out hose

NOTE: Driver is responsible for:

1. Attaching the load-out hose to the truck
2. Making sure the truck tank is vented
3. Determining how many gallons are to be offloaded
4. Operating the load valve (trailer valve) on the truck
5. Disconnecting the load-out hose

Operator is responsible for:

1. All valves downstream of the load-out hose
2. Telling the driver how many gallons the tank can receive
3. Monitoring the potable water tank level

2.9 Connect load-out hose to the coupling on the potable water tank

2.10 Manually check that pipe, hose, and connections are secure

1. Secure any loose connections

2.11 Place 5-gallon buckets under hose connections in transfer equipment

2.12 Have driver check truck valves and vents

2.13 Confirm with driver that truck is ready to discharge water

2.14 Instruct the driver to begin discharge to the tank

1. Operator to visually inspect for leaks
2. Operator to monitor the level in the tank
3. Operator to instruct the driver when the tank is nearly full
4. Driver to stop discharge when instructed

2.15 Have driver close the trailer valve

3. Truck disconnection

3.1 Confirm that 5-gallon buckets are under hose connection points

3.2 Have driver open connection to truck (water may still be in the hose)

3.3 Have driver disconnect load-out hose from trailer valve

3.4 Disconnect load-out hose from the cam-lock coupling

3.5 Allow load-out hose to drain into 5-gallon buckets

3.6 Remove any adapters used

3.7 Have driver replace trailer valve cap or plug

3.8 Have driver close drip tray valve

3.9 Remove 5-gallon buckets from under connection points

3.10 Empty 5-gallon buckets into decontamination sump

3.11 Store equipment (hose, adapters, buckets) properly

4. Truck demobilization

4.1 Work with driver to inspect that truck is in safe condition

4.2 Confirm that hose, buckets, and other equipment have been removed from path of truck exiting the loading area

4.3 Unchock tires

4.4 Remind driver to stay under 5 mph while in the CHQ yard

4.5 Instruct driver to exit the utility pad area

4.6 Spot driver out to the main road

5. Post-transfer system checks

5.1 Scan/file paperwork

Standard Operating Procedure
PG&E Topock Moabi Regional Park CHQ
Operation and Maintenance Plan

Title: Offsite Hauling of Sewage
Number: CHQ-SOP-05_Rev0
Creation Date: 2/2/2015

1 Background and Scope

Pacific Gas and Electric Company (PG&E) is implementing a groundwater remedy near the intersection of Park Moabi Road and Interstate 40, approximately 12 miles southeast of Needles, California at the PG&E Topock Compressor Station (TCS).

The objective of this Standard Operating Procedure (SOP) is to describe the procedure for a subcontracted vacuum truck to enter the Construction Headquarters (CHQ) yard at Moabi Regional Park and remove accumulated sewage from the subsurface sewage tanks.

2 Drawing Numbers

- C-15-01: Park Moabi CHQ Site Layout
- C-15-03 Construction Headquarters Piping Plan

3 Equipment

- Appropriate PPE
- Health and Safety Plan
- 5-gallon buckets
- Spill kit
- Water hose
- Wheel chocks to be placed behind vacuum truck tires

4 Procedure

1. Loading site preparation
   - 1.1 Inspect subcontractor parking area for signs of settling or wear
   - 1.2 Confirm that necessary hoses and connections are present

2. Truck staging and hook-up

2.1 Instruct truck driver not to exceed 5 miles per hour (mph) while in the CHQ yard

2.2 Confirm that driver and equipment meet job requirements

1. Verify that the driver has completed a pre-trip inspection on the truck (and trailer, if applicable)
2. Verify that the driver currently driving the truck is the same driver who performed the pre-trip inspection

NOTE: If any deficiencies are discovered per Step 2.2, contact the Maintenance Supervisor before proceeding.

2.3 Use a spotter to direct truck driver during approach and alignment of truck near underground sewage tank

1. Spotter to use hand signals to stop truck when the front of the truck (or trailer) is in position
2. Ensure that the truck is not blocking access

2.4 Establish a work zone to ensure traffic hazards in the area are mitigated

2.5 Place wheel chocks behind truck tires once truck is parked

2.6 Place 5-gallon bucket under trailer's inlet connection as applicable

2.7 Have driver hook up to the load-out hose

NOTE: Driver is responsible for:

- Attaching the load-out hose to the truck
- Making sure the truck tank is vented
- Determining how many gallons are to be loaded
- Disconnecting the load-out hose
- Operating the load valve on the truck/trailer

Operator is responsible for:

- All valves upstream of the load-out hose
- Telling the driver how many gallons have been loaded

2.8 Connect load-out hose to the coupling on the sewage tank

2.9 Manually check that pipe, hose, and connections are secure

1. Secure any loose connections

2.10 Place 5-gallon buckets under hose connections in transfer equipment

2.11 Have driver check truck valves and vents

2.12 Confirm with driver that truck is ready to receive sewage

2.13 Instruct the driver to begin vacuum on the tank

1. Operator to visually inspect for leaks
2. Operator to monitor the level in the tank
3. Operator to instruct the driver when the tank is empty
4. Driver to stop vacuum when instructed

2.14 Have driver close the load valve

3. Truck disconnection

3.1 Confirm that 5-gallon buckets are under hose connection points

3.2 Have driver open connection to truck (sewage may still be in the hose)

3.3 Have driver disconnect load-out hose from load valve

3.4 Disconnect load-out hose from the cam-lock coupling

3.5 Allow load-out hose to drain into sewage tank or 5-gallon buckets

3.6 Remove any adapters used

3.7 Have driver replace load valve cap or plug

3.8 Have driver close drip tray valve

3.9 Remove 5-gallon buckets from under connection points

3.10 Empty 5-gallon buckets into truck

3.11 Store equipment (hose, adapters, buckets) properly

4. Truck demobilization

4.1 Work with driver to inspect that truck is in safe condition

4.2 Confirm that hose, buckets, and other equipment have been removed from path of truck exiting the loading area

4.3 Unchock tires

4.4 Remind driver to stay under 5 mph while in the CHQ yard

4.5 Spot driver out to the main road

5. Post-transfer system checks

5.1 Scan/file paperwork

O&M Plan Appendix C: Select Equipment O&M Manuals (*On CD-ROM only*)

- Global Thermoelectric Generator Model 8550

8550 Thermoelectric Generator

Operating Manual

54254 Rev. 6

Global Thermoelectric
Bay 9, 3700 - 78 AVE., S.E.
Calgary, Alberta, Canada
T2C 2L8

Phone: 1-403-236-5556
Fax: 1-403-236-5575
WEB: www.globalte.com

GLOBAL THERMOELECTRIC
MODEL CP8550 GENERATOR

WARNING: DO NOT ALLOW CURRENT TO CATHODIC PROTECTION LOAD TO EXCEED 30 AMPS.

THE MODEL CP8550 GENERATOR IS NOT RATED TO SUPPLY MORE THAN 30 AMPS OF CURRENT TO THE LOAD. IF TOTAL CIRCUIT RESISTANCE IS LESS THAN 0.5 OHMS THEN THE 1000 WATT VARIABLE RESISTOR IN THE CP BOX SHOULD BE WIRED IN SERIES WITH THE CIRCUIT AND ADJUSTED SO THAT CURRENT DOES NOT EXCEED 30 AMPS.

FOR FURTHER INFORMATION PLEASE CONTACT THE GLOBAL CUSTOMER SERVICE DEPARTMENT AT THE NUMBER SHOWN BELOW.

GLOBAL THERMOELECTRIC
BAY 9, 3700 - 78 AVE. S.E.
CALGARY, ALBERTA, CANADA
T2C 2L8

PHONE: 1-403-236-5556
FAX: 1-403-236-5575

TABLE OF CONTENTS

1 General Information 1-1
1.1 Manual Identification 1-1
1.2 Definition of Terms 1-1
1.3 Theory of Operation 1-2
1.4 Physical Description 1-3
1.5 Electrical Output Characteristics 1-4
1.6 Fuel Information 1-6

2 Installation and Operation 2-1
2.1 Unpacking and Mounting 2-1
2.2 Data Plate Information 2-2
2.3 Fuel Supply 2-3
2.4 Ignition and Start Procedure 2-4
2.5 Heat Up and Power Adjustment 2-8
2.6 Applying Customer Load 2-11
2.7 Start-Up Data Sheet 2-11

3 Service and Maintenance 3-1
3.1 Suggested Periodic Maintenance 3-1
3.2 Power Check 3-3
3.3 Fuel System 3-3
3.4 Burner System 3-5
3.5 Cooling System 3-7
3.6 Spark Ignition (SI) 3-8
3.7 Automatic Shut-Off (SO) 3-12
3.8 Power Unit Testing 3-13
3.9 Trouble Shooting Guide 3-14
3.10 8550 TEG Parts List 3-16
3.11 Fuel System Parts List 3-19

4 APPENDIX 4-1
4.1 Gas Specifications 4-1
4.2 8550 Performance Log 4-3

LIST OF ILLUSTRATIONS

Figure 1 Design Illustration 1-2
Figure 2 Model 8550 Dimensions 1-4
Figure 3 Gross Power Unit Electrical Output Characteristics at 20 C, Beginning of Life (w/o Power Conditioner) 1-5
Figure 4 Power as a Function of Ambient Temperature 1-6
Figure 5 TEG Mounting 2-2
Figure 6 Installation of Spark Igniter and Fuel Line 2-3
Figure 7 Altitude Adjustment 2-4
Figure 8 Applying Thread Sealant 2-5
Figure 9 Wiring Diagram, 8550 TEG 2-6
Figure 10 Fuel System Components, SI and SO 2-8
Figure 11 Power Calculation 2-9
Figure 12 Air Shutter Adjustment 2-11
Figure 13 Fuel System Components, SI and SO 3-4
Figure 14 Orifice Assembly Removal 3-5
Figure 15 Burner System Components 3-6
Figure 16 Spark Ignition System Wiring 3-8
Figure 17 Spark Ignition Components 3-9
Figure 18 Automatic Shut-Off Components 3-12
Figure 19 8550 TEG Parts List, Sheet 1 3-16
Figure 20 8550 TEG Parts List, Sheet 2 3-17
Figure 21 Fuel System Parts List, 8550 TEG 3-19

1 GENERAL INFORMATION

1.1 Manual Identification

1.1.1 This manual provides installation, operation and maintenance instructions for the Global Model 8550 Thermoelectric Generator. The generator must be used in conjunction with a Power Conditioner. The manual for the operation of this Power Conditioner is included following this manual. In addition, instructions for the operation of the Cathodic Protection Interface System is also included.

1.2 Definition of Terms: To correctly use this manual the reader must interpret the meaning of the following terms as herein defined:

Thermoelectric Generator. A device that produces electrical power through the direct conversion of heat energy to electrical energy including its burner and fuel system.

Power Unit. The hermetically sealed portion of the generator that contains the thermoelectric materials.

TEG. A Thermoelectric Generator.

Matched Load. A condition of load where the load voltage of the generator is one half of the open circuit voltage.

Optimum Load. A condition of load where the power output of the generator is maximized.

Power Conditioner. A broad term used to describe an electronic device attached to the generator that converts, adjusts, limits or otherwise conditions the output power.

Converter-Limiter (C/L). A specific electronic device attached between the generator and load that converts one level of DC voltage to another, and limits the voltage level.

Converter. A specific electronic device attached between the generator and load that converts one level of DC voltage to another.

Limiter. A specific electronic device attached between the generator and load that limits the voltage level.

Heat Pipe. A hermetically sealed fluid filled heat transfer device and its associated cooling fins used to cool the cold junctions of the power unit.

Rated Power. The power which the TEG's power will produce at standard temperature and voltage.

Set Power. The power level to which the power unit is set up at non-standard temperatures in order that it will produce Rated Power when the temperature returns to standard.

1.3 Theory of Operation

1.3.1 A TEG produces electrical power through the direct conversion of heat energy into electrical energy. When two dissimilar materials which are joined together and are heated at one end (a thermocouple) a voltage will exist across the cooler end. Electrical power will be delivered to a load placed in the circuit. This process will continue provided that the temperature difference is maintained. A TEG is a system which provides the means to maintain these conditions.

1.3.2 Figure 1 illustrates how this is accomplished in the Model 8550 TEG. A thermocouple is formed by a P type and an N type thermoelectric element joined together electrically by a hot junction electrode. Adjacent thermocouples are joined electrically by cold junction electrodes. A total of 325 thermocouples, each producing 87mV, at standard conditions are connected in series to produce 590 Watts at 28 Volts and 21 Amperes.

The hot junction of the thermocouples is maintained at a high temperature (538ºC or 1000ºF) by a burner which operates on the gaseous fuels. The cold junction of the thermocouples is maintained at a lower temperature (163ºC or 235ºF) by an array of heat pipes which transfer the heat to the ambient air by natural convection. The thermocouples are contained in a hermetically sealed enclosure because they are adversely affected when exposed to air at operating temperatures. They are surrounded by thermal insulation to minimize heat loss.

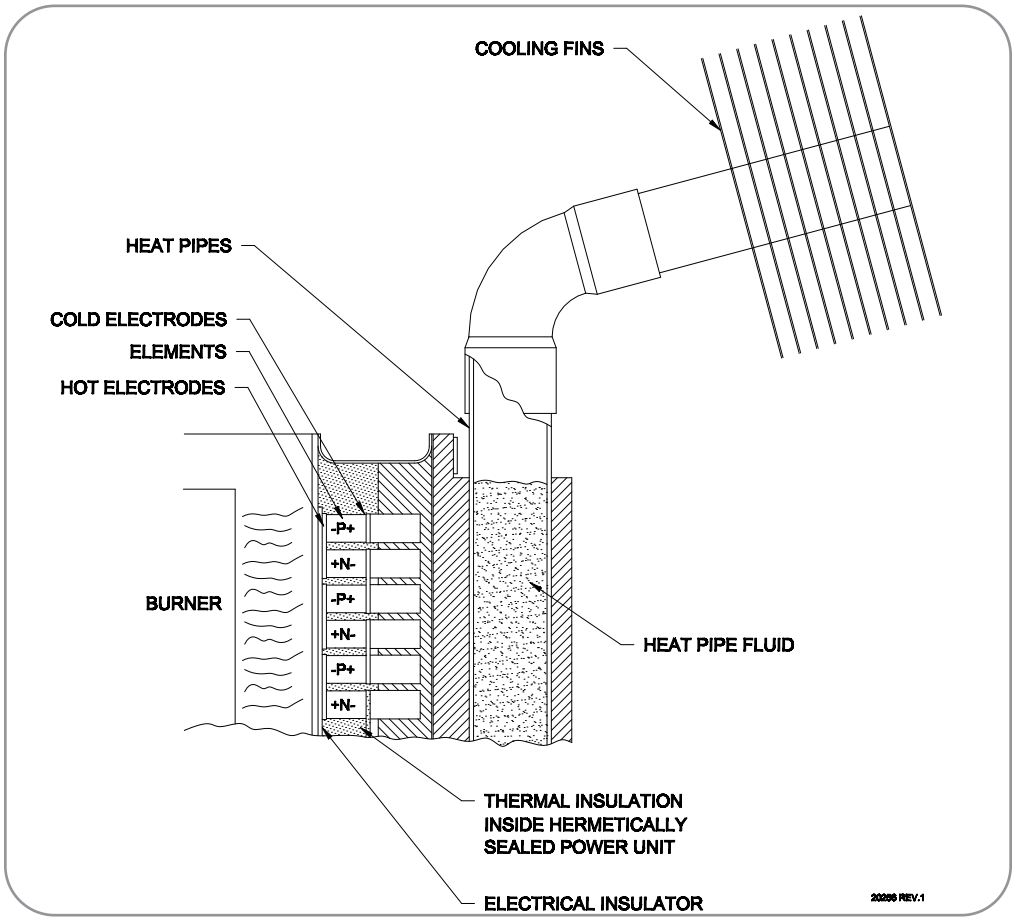

Figure 1 Design Illustration

1.3.3 The cold junctions of the Model 8550 TEG are cooled by series of heat pipes. Each heat pipe is hermetically sealed and contains a measured amount of fluid in equilibrium with its vapour. As heat is applied to the fluid it boils and then re-condenses in the upper portion due to the cooling effect of the cooling fins. In this way heat is transferred to the cooling fin in a very efficient manner.

1.3.4 The burner operates at moderate fuel pressures, approximately 124 kPa (18 psi) for propane and 62 kPa (9 psi) for natural gas. The fuel gas is expanded through an orifice and then flows through a venturi where it draws in air needed for combustion. The fuel gas flow is controlled by a pressure regulator and adjusted by the operator to obtain the required set power.

1.3.5 Remember from electrical theory that maximum power is delivered to a load when the load voltage is one half of the open circuit voltage of the source. This condition is called matched load. The TEG is similar except that due to a change in the internal resistance of the power unit with current, maximum power is delivered when the load voltage is slightly higher than one half of the open circuit voltage.

1.3.6 The power unit must always be in a loaded condition. This is because under extended open or high load voltage conditions the hot junction temperature may rise above the safe operating range. For this reason the power unit must always remain connected to a power conditioner which will limit the power unit voltage to less than 32.5 Volts.

1.3.7 In summary the TEG produces electrical power when a temperature difference is maintained between the hot and cold junctions of the thermoelectric materials. The temperature difference and therefore the amount of power produced, depends on both the rate at which fuel is supplied to the burner and the amount of cooling supplied by the ambient air. The operation of the TEG is controlled by the fuel pressure supplied to the burner.

1.4 Physical Description

1.4.1 Figure 2 shows the Model 8550 TEG in its normal operating configuration. Physical size data is given in Table 1.

Table 1

Physical Size Data		
Diameter of Top	155 cm	61 in.
Overall Height	102 cm	40 in.
Length of Lower Cabinet	46 cm	18 in.
Width of Lower Cabinet	46 cm	18 in.
Height of Lower Cabinet	44cm	17 in.
Weight (less Power Conditioner)	83 kg	183 lb

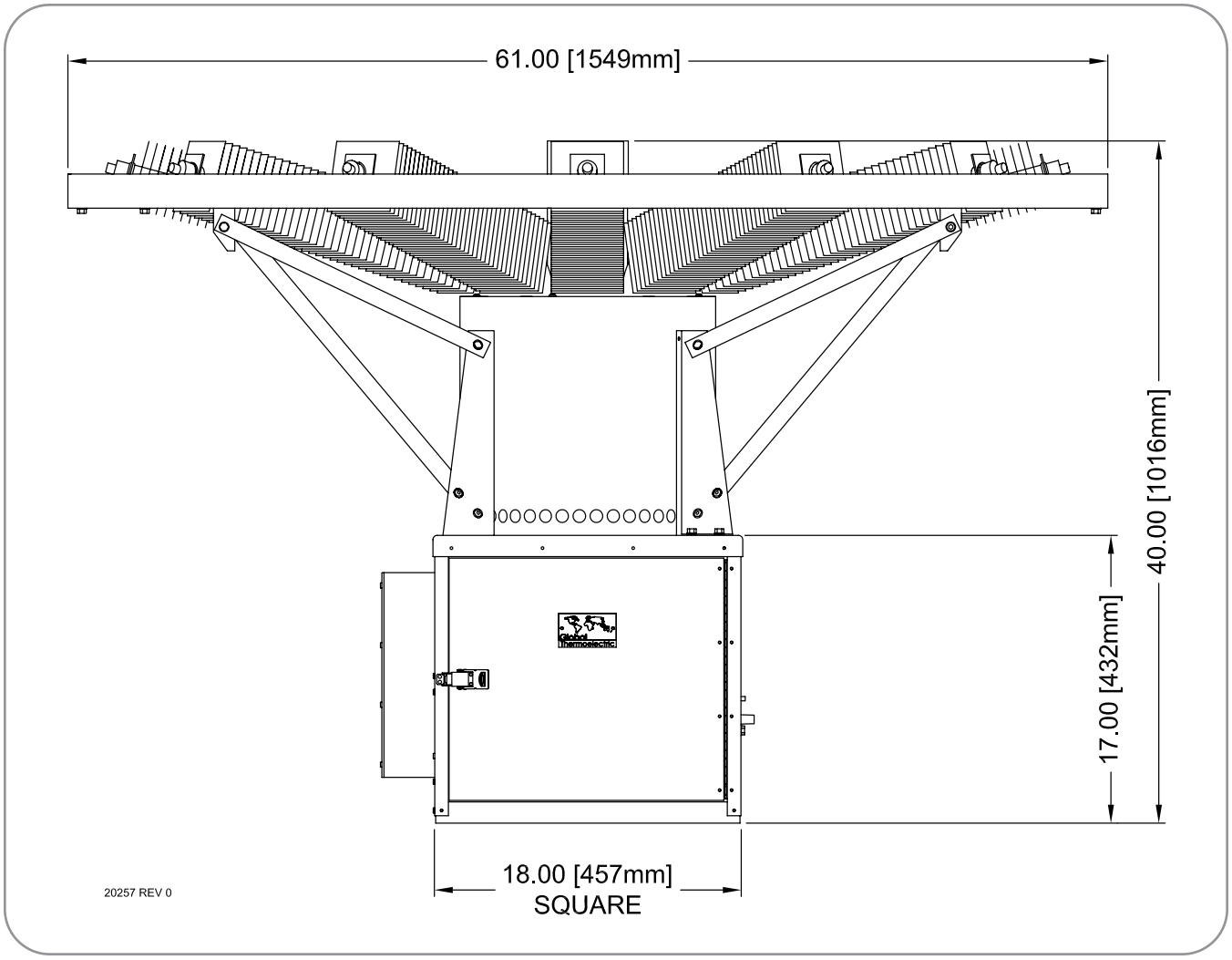

Figure 2 Model 8550 Dimensions

1.5 Electrical Output Characteristics

1.5.1 The typical electrical output characteristics at standard temperature of a Model 8550 power unit without the power conditioner are shown in Figure 3. The power, current and voltage are shown as a function of the power unit load resistance. Note that the output power curve goes through a maximum between 1.00 and 2.00 Ohms and that rated power can only be obtained at this point. In order to use Figure 3 consider the following example:

A load resistance of 25 Volts is required.

a) Enter the graph at 25 Volts and read horizontally across to the voltage curve.

b) Now read vertically to obtain the load resistance, available power and available current, 1.1 Ohms, 560 Watts and 22.4 Amps.

Note: That if the actual customer load requires less power, that is, has a higher resistance, the voltage would rise. Therefore, a voltage limiting power conditioner is used to dissipate the difference between the available power and actual customer load.

Figure 3 illustrates the importance of a power conditioner. As the load resistance increases so does the voltage. However, the power unit will not tolerate voltages above 35 Volts, therefore the power conditioner must limit the voltage to the customer and limit the voltage of the power unit by dissipating any excess power. Voltages outside the range of Figure 3 are achieved by series connection of multiple TEGs or by using a DC to DC converter type power conditioner. Consult Global Thermoelectric for the system best suited to your application.

1.5.2 The available power of a Model 8550 TEG is also a function of the amount of cooling supplied by the heat pipes. The cooling is a function of both the ambient air temperature and the wind speed. Figure 4 shows the typical variation of output power as a function of ambient temperature for still air or low wind conditions, wind speed less than 5 km per hour (3 mph). The effect of wind will always be to increase the cooling and therefore increase the available power. When determining the set power, Figure 4 should be used along with the corrected air temperature from Table 3. Whenever possible, set up and testing the generator should be performed during periods of low wind as these readings will be more reliable than those using the corrected air temperature method.

1.5.3 The TEG should never be operated above the curve in Figure 4, as this may result in damage to the power unit.

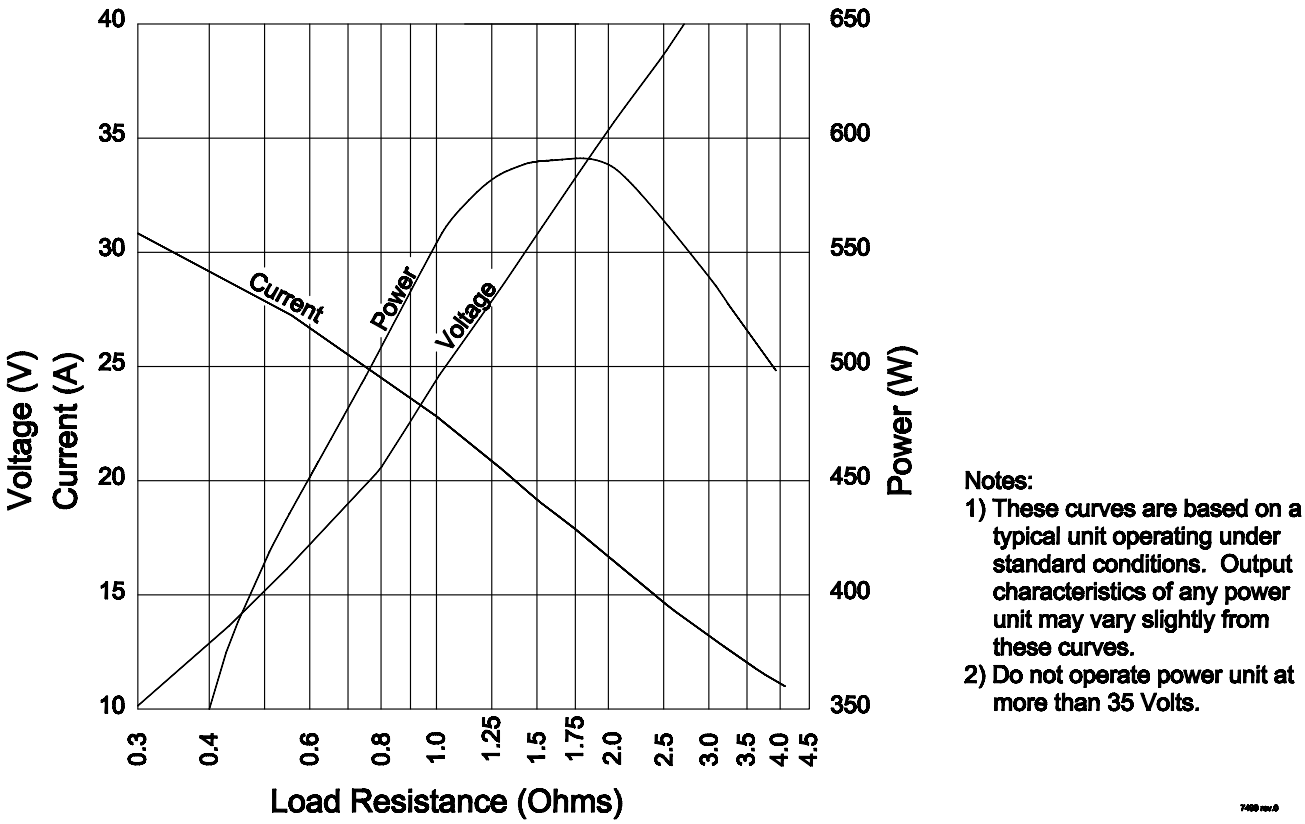

Figure 3 Gross Power Unit Electrical Output Characteristics at 20°C, Beginning of Life (without Power Conditioner)

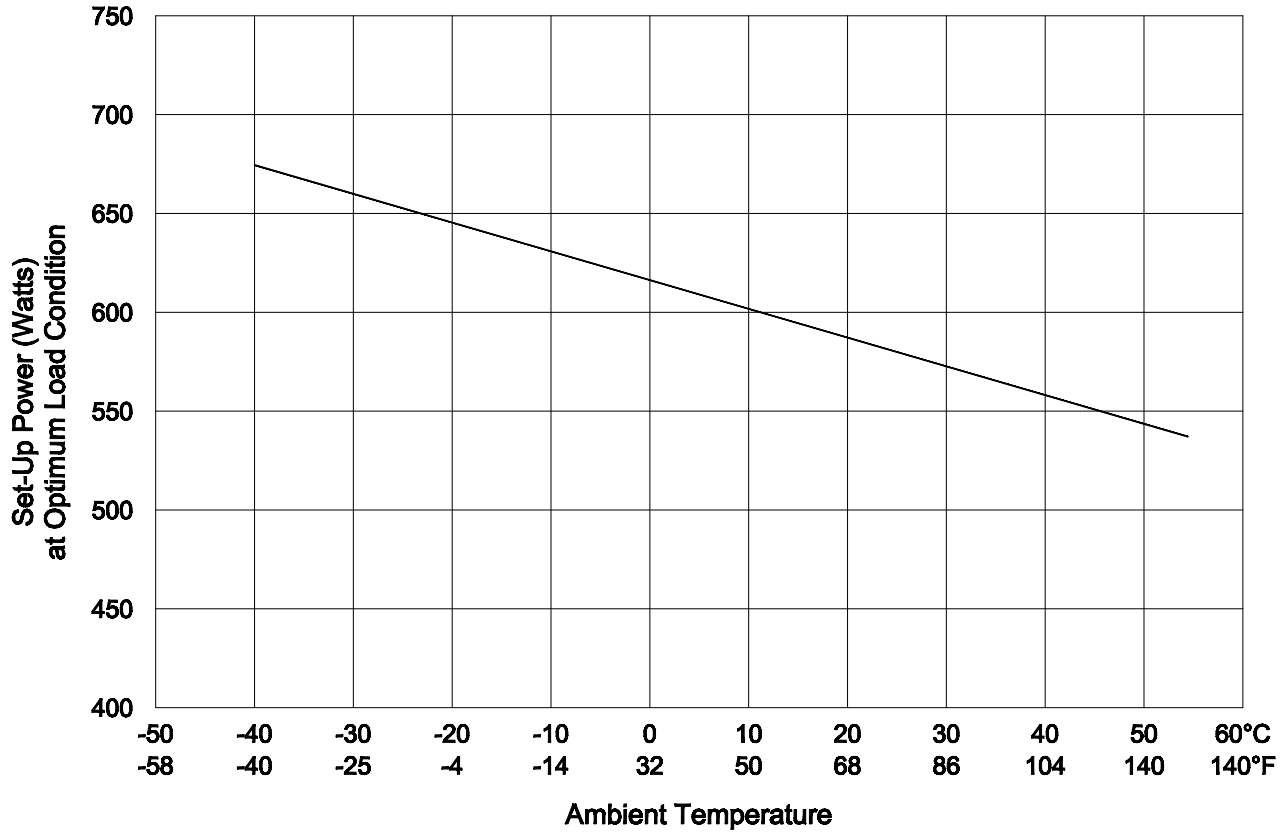

Notes:
1. This curve is based on a typical power unit operating in calm air. Correction must be made for windy conditions.
2. Do no operate power unit above this curve. Always correct air temperature for wind.

21074 rev.0

Figure 4 Power as a Function of Ambient Temperature

1.6 Fuel Information

1.6.1 The fuel consumption of a Model 8550 TEG operating at rated power under standard temperature conditions is given in Table 2. These values are subject to change without notice.

1.6.2 When operating on propane the vapour pressure of propane at low ambient temperatures must be considered. In order to operate reliably the fuel pressure regulator input pressure should be above 20 psig. This limits the operating temperature to above -20ºC (-4ºF). If operation below this temperature is desired a liquid withdrawal and vaporization system must be used. Consult Global Thermoelectric for suitable designs of such systems.

Table 2

Fuel Consumption	
Propane	**Natural Gas**
3.50 lb/hr	70 SCFH
1.59 kg/hr	2m3/hr
0.83 US gal/hr (liquid)	-
3.13 liter/hr (liquid)	-

Table 3

Corrected Air Temperature for Wind															
Wind Speed	Air Temperature **(ºC)** *(ºF)*														
(km/hr)	**-20**	**-15**	**-10**	**-5**	**0**	**5**	**10**	**15**	**20**	**25**	**30**	**35**	**40**	**45**	**50**
(mile/hr)	*-4*	*5*	*14*	*23*	*32*	*41*	*50*	*59*	*68*	*77*	*86*	*95*	*104*	*113*	*122*
0	**-20**	**-15**	**-10**	**-5**	**0**	**5**	**10**	**15**	**20**	**25**	**30**	**35**	**40**	**45**	**50**
0	*-4*	*5*	*14*	*23*	*32*	*41*	*50*	*59*	*68*	*77*	*86*	*95*	*104*	*113*	*122*
5	**-27**	**-21**	**-16**	**-11**	**-6**	**-1**	**5**	**10**	**16**	**21**	**27**	**32**	**37**	**42**	**47**
3.1	*-17*	*-6*	*3*	*12*	*21*	*30*	*41*	*50*	*61*	*70*	*81*	*90*	*99*	*108*	*117*
10	**-34**	**-27**	**-21**	**-15**	**-9**	**-3**	**2**	**9**	**13**	**18**	**24**	**29**	**35**	**40**	**46**
6.2	*-29*	*-17*	*-6*	*5*	*16*	*27*	*36*	*48*	*55*	*64*	*75*	*84*	*95*	*104*	*115*
15	**-40**	**-32**	**-24**	**-18**	**-12**	**-6**	**-1**	**4**	**10**	**15**	**21**	**26**	**32**	**37**	**42**
9.3	*-40*	*-26*	*-11*	*0*	*10*	*21*	*30*	*39*	*50*	*59*	*70*	*79*	*90*	*99*	*109*
20	**-41**	**-35**	**-29**	**-21**	**-14**	**-8**	**-3**	**2**	**8**	**13**	**19**	**24**	**30**	**35**	**41**
12.4	*-42*	*-31*	*-20*	*-6*	*7*	*18*	*27*	*36*	*46*	*55*	*66*	*75*	*86*	*95*	*106*
25	**-44**	**-37**	**-31**	**-23**	**-16**	**-10**	**-5**	**0**	**6**	**11**	**17**	**22**	**28**	**33**	**38**
15.5	*-47*	*-35*	*-24*	*-9*	*3*	*14*	*23*	*32*	*42*	*52*	*63*	*72*	*82*	*91*	*100*
30	**-46**	**-39**	**-33**	**-25**	**-18**	**-12**	**-7**	**-1**	**4**	**9**	**15**	**20**	**26**	**31**	**37**
18.6	*-51*	*-38*	*-27*	*-13*	*0*	*10*	*19*	*30*	*39*	*48*	*59*	*68*	*79*	*88*	*99*
35	**-47**	**-40**	**-34**	**-26**	**-19**	**-13**	**-8**	**2**	**3**	**8**	**14**	**19**	**25**	**30**	**36**
21.7	*-53*	*-40*	*-29*	*-15*	*-2*	*9*	*18*	*28*	*37*	*46*	*57*	*66*	*77*	*86*	*97*
40	**-49**	**-42**	**-35**	**-22**	**-20**	**-14**	**-9**	**-3**	**2**	**7**	**13**	**18**	**24**	**29**	**35**
24.8	*-56*	*-44*	*-3*	*-8*	*-4*	*7*	*16*	*27*	*35*	*45*	*55*	*64*	*75*	*84*	*95*

2 INSTALLATION AND OPERATION

2.1 Unpacking and Mounting

2.1.1 The following tools are required in order to set up and operate the 8550 TEG:

- A voltmeter or meters with leads and clips able to measure the following ranges:
  0-30 ±0.1 V
  0-30 ±0.1 mV
  Customer Load Voltage
- Two small adjustable wrenches that will open to 16mm (5/8 in.).
- A medium flat blade screwdriver.
- A fine flat blade screwdriver.
- Wire strippers or knife.
- Teflon thread sealant tape.

2.1.2 Unpack the TEG from its shipping crate. Retain the crate until the TEG is operational. Check the TEG for any damage which may have occurred during shipping. Such damage should be reported as soon as possible. Some types of damage may make the TEG inoperable. Consult Global Thermoelectric before operating an 8550 TEG with damage.

2.1.3 Locate the installation kit containing the following:

- One fuel line kit.
- One spark ignitor electrode.
- 4 each 1/4 in. x 1 in. mounting bolts c/w nuts.

Identify and locate the Power Conditioner. The Power Conditioner may have been attached to the TEG at the factory or it may have been shipped separately, in the same or other crate, depending on the make and model.

2.1.4 Before removing the TEG, check and re-tighten any bolts which may have come loose during shipping. **Remove the black tie wraps which clamp the ends of the heat pipe to the support ring.** Failure to do this could cause the heat pipes to crack when they expand. It is recommended that lifting of the TEG be done by two or more persons. The upper ring around the heat pipes or the frame to which this ring is mounted should be used as lifting points. If lifting will be done by slings, they should be secured to the upper ring in at least three points so that the TEG will not swing or rock during lifting.

2.1.5 The TEG must be mounted to a firm and stable base. The base must be level and may not deviate more than 3º (50 mm per meter) (0.5 in. per foot). The TEG should be mounted at a height sufficient to prevent direct flooding or heavy snowfall from interfering with the flow of cooling or intake air. It is convenient for the operator if the mounting base is about 900 mm (36 in.) off the ground.

If the TEG is installed near a building or other large object that may obstruct the flow of wind, experience indicates that a good location is on the windward side, a minimum of

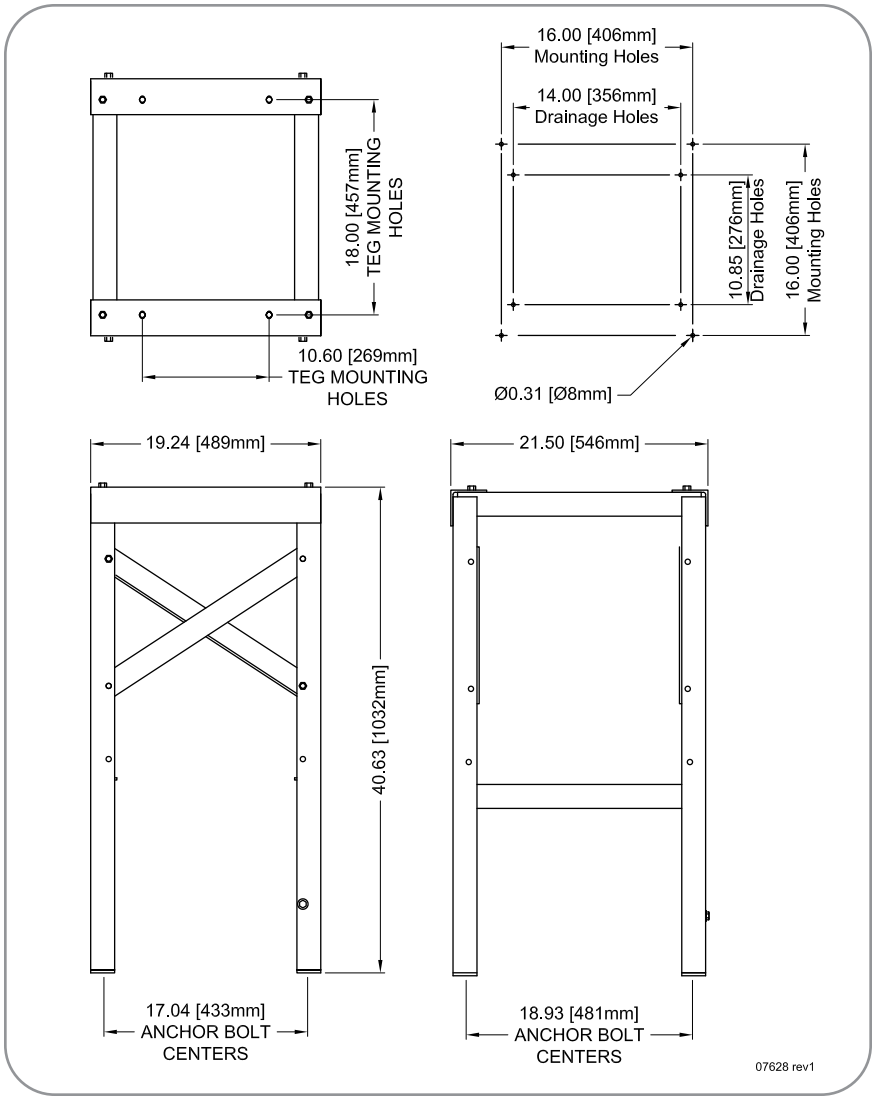

Figure 5 TEG Mounting

15 meters (45 feet) from the object or on the roof if possible. Be sure that the TEG's location relative to buildings and fuel tanks are in accordance with local regulations.

WARNING: Operation of TEG on an unstable or non-level base or in locations where cooling air flow may be obstructed will cause overheating of the TEG.

2.1.6 A field proven mounting base arrangement is shown in Figure 5.

2.1.7 Install the fuel line kit by connecting one end to the bottom of the “T” fitting on the fuel system and the other end to the orifice at the bottom of the venturi. Leak check both joints prior to use.

2.1.8 Install the spark igniter electrode by sliding it through the fitting on the bottom side of the burner. Slide it in until it touches inside, then pull back approximately 1/4” [6mm]. This should leave 2.20” to 2.35” [56 to 60mm] extruding beyond the fitting, see Figure 6. Gently tighten the nut on the fitting to maintain the position of the electrode. Connect the terminal lug fo the high voltage cable to the end of the spart igniter rod.

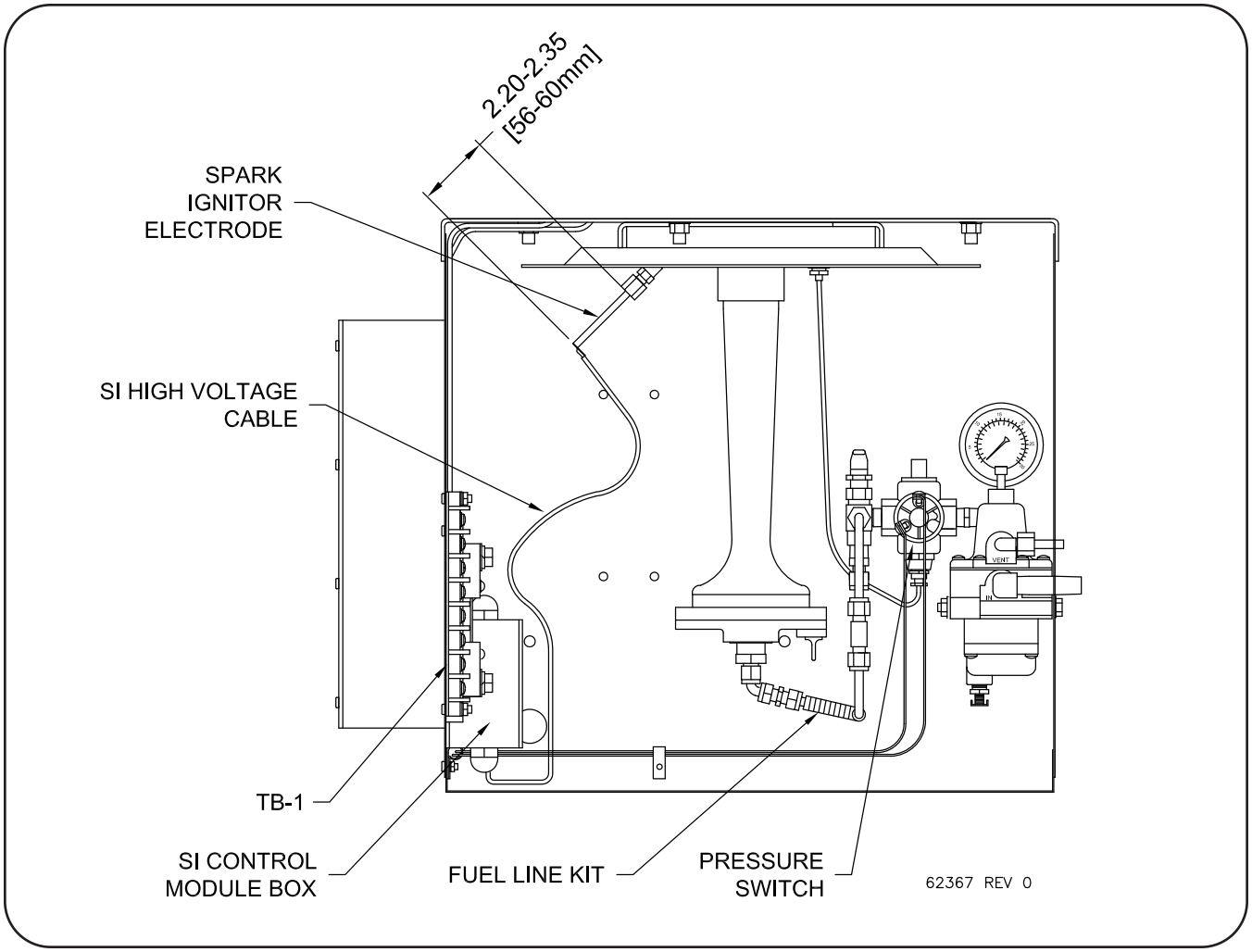

Figure 6 Installation of Spark Igniter and Fuel Line

2.2 Data Plate Information

2.2.1 The data plate is located on the inside of the cabinet door. The data plate indicates the following information:

a) Fuel type: An "X" is stamped in the appropriate box for Natural Gas or Propane. Each of these fuels uses several different fuel system components, therefore, the TEG should only be used with the fuel indicated.

b) Model Number: The model number on the data plate is interpreted as follows:

8550(*) - (**) (***)

* Fuel Type: L = Propane
N = Natural Gas
** Power Conditioner Nominal Output Voltage: 12, 24 or 48V
*** Factory Options:
SI = Spark Ignition
SO = Automatic Shut-off

c) Fuel Pressure, Power, Voltage: The data plate indicates the fuel pressure, power and voltage that were measured during the factory performance test. The operating fuel pressure, voltage and Set Power must be determined and adjusted as per section 2.4 and 2.5.

d) Serial Number: The serial number is a unique number assigned by Global Thermoelectric to provide traceability.

Please indicate both the complete Model number and Serial number when contacting Global Thermoelectric.

2.3 Fuel Supply

2.3.1 The fuel pressure regulator maximum inlet pressure is 172 kPa (25 psi). Make sure that the supply pressure will never exceed this value. If it is expected that the supply fuel pressure will vary greatly, the use of an additional primary regulator is suggested so that the input pressure to the internal fuel pressure regulator is relatively constant.

2.3.2 Check that the fuel pressure is still close to where it was set at the factory. This pressure is marked on the inside of the door of the cabinet. The fuel pressure supplied may need to be adjusted for altitude. Figure 7 shows the correction for variation from the factory altitude of 750m (2460 ft).

2.3.3 If propane is used at temperatures below -20ºC (-4ºF) the vapour pressure may not be sufficient, see section 1.6.2. If propane is used at temperatures below 5ºC (41ºF) freezing of moisture in the propane may occur. It is recommended that pure Methyl Hydrate be added in the ratio of 1 to 800 by volume as an antifreeze additive.

2.3.4 A fuel shut-off valve must be installed between the TEG and the fuel supply. All fuel piping should be done in accordance with local regulations. Inspect fuel lines and fittings to ensure that they are free of foreign material. Apply teflon tape sealant as illustrated in Figure 7 to minimize fuel line contamination. Purge fuel lines of all air.

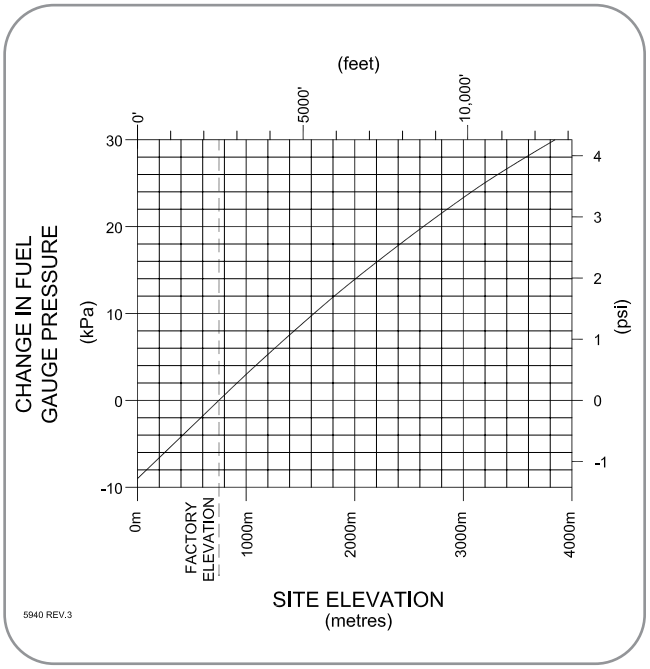

Figure 7 Altitude Adjustment

2.3.5 If it is expected that the fuel may contain moisture or other contamination, a filtering or fuel conditioning system must be used. Consult Global Thermoelectric for more information.

2.3.6 The TEG is equipped with a 1/4 in. NPT male connector. Remove the plastic protective cap and connect the fuel line. Leak check the complete fuel system.

WARNING: Use only the type of fuel indicated on the data plate, see section 2.2. The maximum inlet fuel pressure must never exceed 172 kPa (25 psi).

2.4 Ignition and Start Procedure

2.4.1 Before attempting start the Model 8550 TEG, the operator should ensure that the fuel system has been properly installed as per section 2.3. The operator should also understand the Electrical Output Characteristics in Figure 3, definition of terms in section 1.2, and the operation of the Power Conditioner supplied for this TEG.

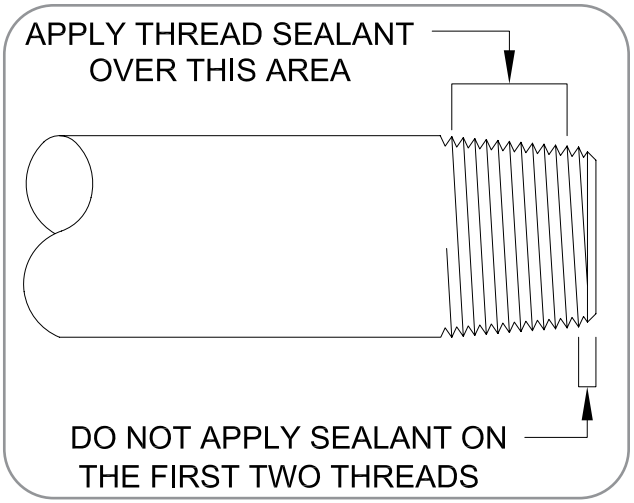

Figure 8 Applying Thread Sealant

2.4.2 Before starting the TEG familiarize oneself with the basic wiring diagram Figure 9. Identify the various components and find their location on the TEG system. Also familiarize oneself with the operations of the power conditioner and how to adjust the voltage.

2.4.3 The customer load must be disconnected for start up and power adjustment. It is best to remove both the positive and negative load wires at terminals 2 and 4 of Terminal Block TB-1.

WARNING: Before starting, make sure that the Power Unit output wires are connected to Power Conditioner input.

2.4.4 Starting, heat up and power adjustment are made easier by the use of the Start-Up Data Sheets in the back of this section. It is suggested that these sheets be used during start-up.

First determine the required Set Power for the current ambient air temperature and wind speed. Enter these in the Start-Up Data Sheet. See Table 3 for the corrected air temperature and enter it in the Start-Up Data Sheet. Use this corrected air temperature with Figure 4 to find the required Set Power and enter it in the Start-Up Data Sheet. This is the power to which the TEG must be set at your ambient conditions so that rated power will be generated when the ambient conditions return to standard.

2.4.5 Starting procedure for TEG with Spark Ignition (SI) and Automatic Shut-Off (SO) options, see Figure 10. Turn on the fuel supply to the TEG and observe the fuel pressure at the pressure gauge. The pressure should be in the range of 110 to 150 kPa (16 to 22 psi) for propane or 41 to 69 kPa (6 to 10 psi) for Natural Gas. If the pressure is lower, increase it by turning the screw on the pressure regulator clockwise. If the pressure is

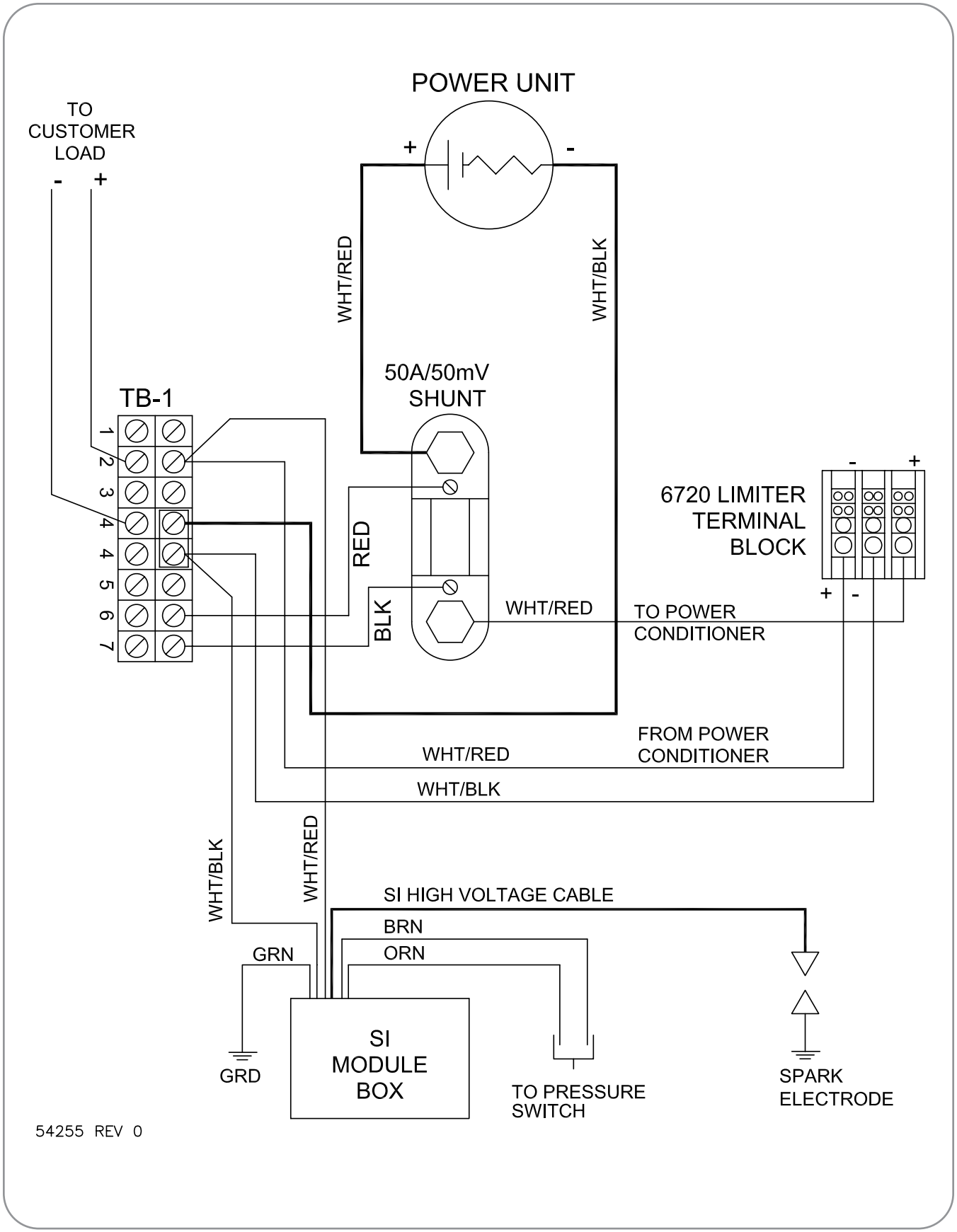

Figure 9 Wiring Diagram, 8550 TEG

higher, decrease it by turning the screw on the pressure regulator counterclockwise and venting the pressure through the burner by momentarily pressing the button on the Auto Shut-Off Valve.

Check the operation of the ignition system by shorting the terminals of the Pressure Switch. The spark ignitor clicking sound should be heard, if not, trouble shoot the system as indicated in section 3.6. The clicking sound should be rapid and strong.

Install a voltmeter to read the Power Unit voltage measured at terminals 6(+) and 4(-) of TB-1.

Close the air plate on the venturi completely (see Figure 12). Shut off the fuel supply at the external valve.

Check that the Burner Run Valve is closed (down). Open the Auto Shut-Off Valve by pressing the button with one hand to keep the button depressed. Open the external valve, the clicking sound of the spark ignitor should be heard. Ignition will occur with a series of banging sounds. Combustion will be indicated by a small rise in the Power Unit voltage and change in the sound. Continue to hold down the button. If ignition does not occur within 5 seconds, release the button and check to make sure that fuel is reaching the burner, i.e. that the fuel lines are purged of air. If fuel is reaching the burner, trouble shoot the ignition system, see section 3.6.

As soon as combustion is noted slowly open the Burner Run Valve. Open the air plate to its full Open position. A change in the burner sound will be noted. Continued combustion will be indicated by a continued rapid rise in the power unit voltage. Continue to hold down the button. If a flame outage is noted close the Burner Run Valve to re-establish the flame and then reopen the valve.

WARNING: Do not allow the burner to operate with only the Auto Shut-Off valve open for more than 5 minutes. The Burner Run Valve should be opened as soon as the flame is burning.

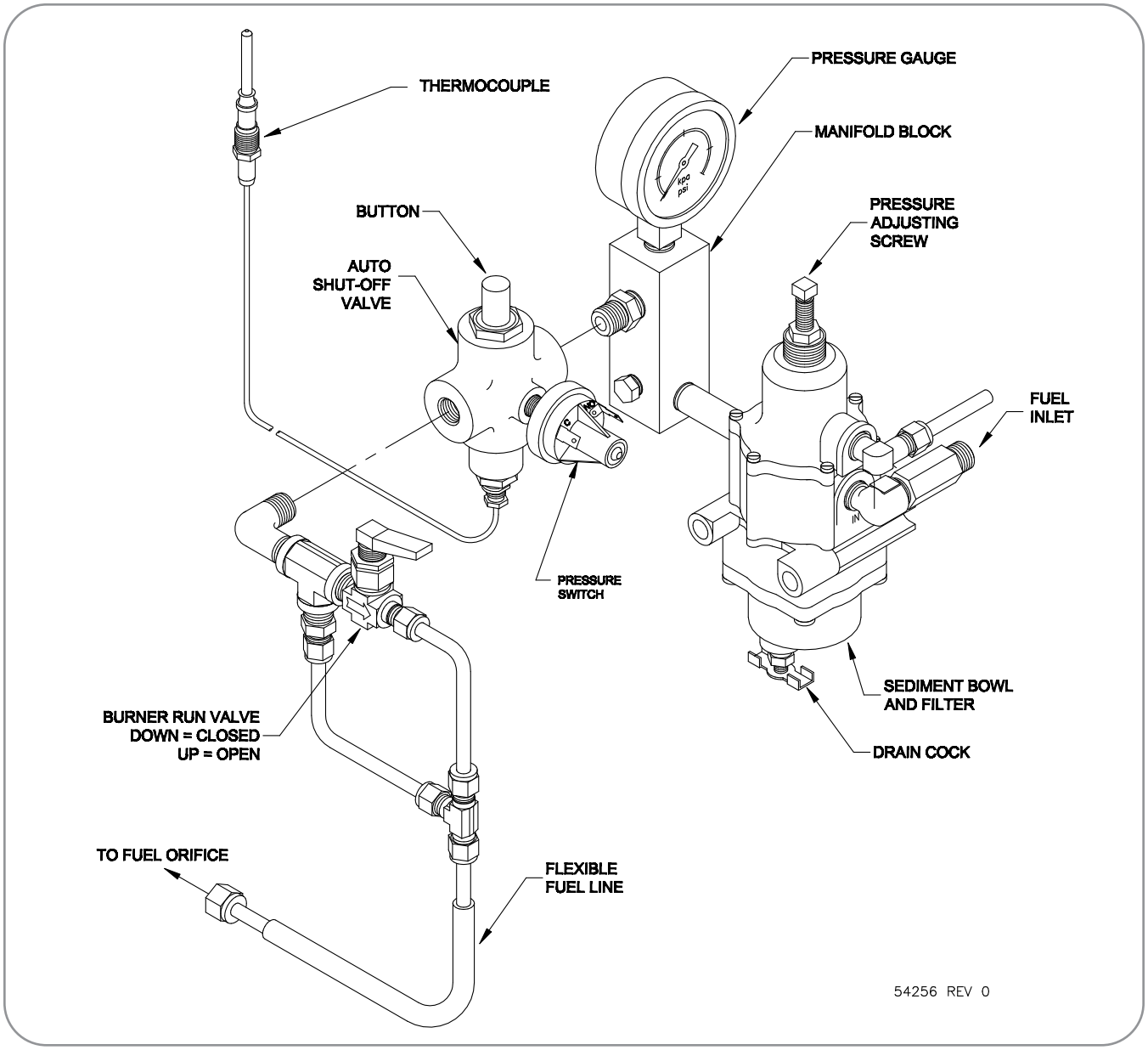

Figure 10 Fuel System Components, SI and SO

Five minutes after opening the Burner Run valve fully press the button and slowly release the button. The internal electromagnet should now hold the Auto Shut-Off valve open. If the valve does not stay open, immediately press the button again and hold for one more minute, then try to release it again. If the valve again does not stay open, trouble shoot the Automatic Shut-Off system, see section 3.7.

Once the burner is started proceed to section 2.5, Heat Up and Power Adjustment.

If the operation of the burner must be stopped, turn off the fuel supply at the external valve. Then close the Burner Run Valve, the Auto Shut-Off valve will close when the burner cools down and its internal electromagnet no longer holds the valve open.

WARNING: Once the burner is started, you must proceed to the Heat Up and Power Adjustment (section 2.5). Failure to do so may overheat the power unit.

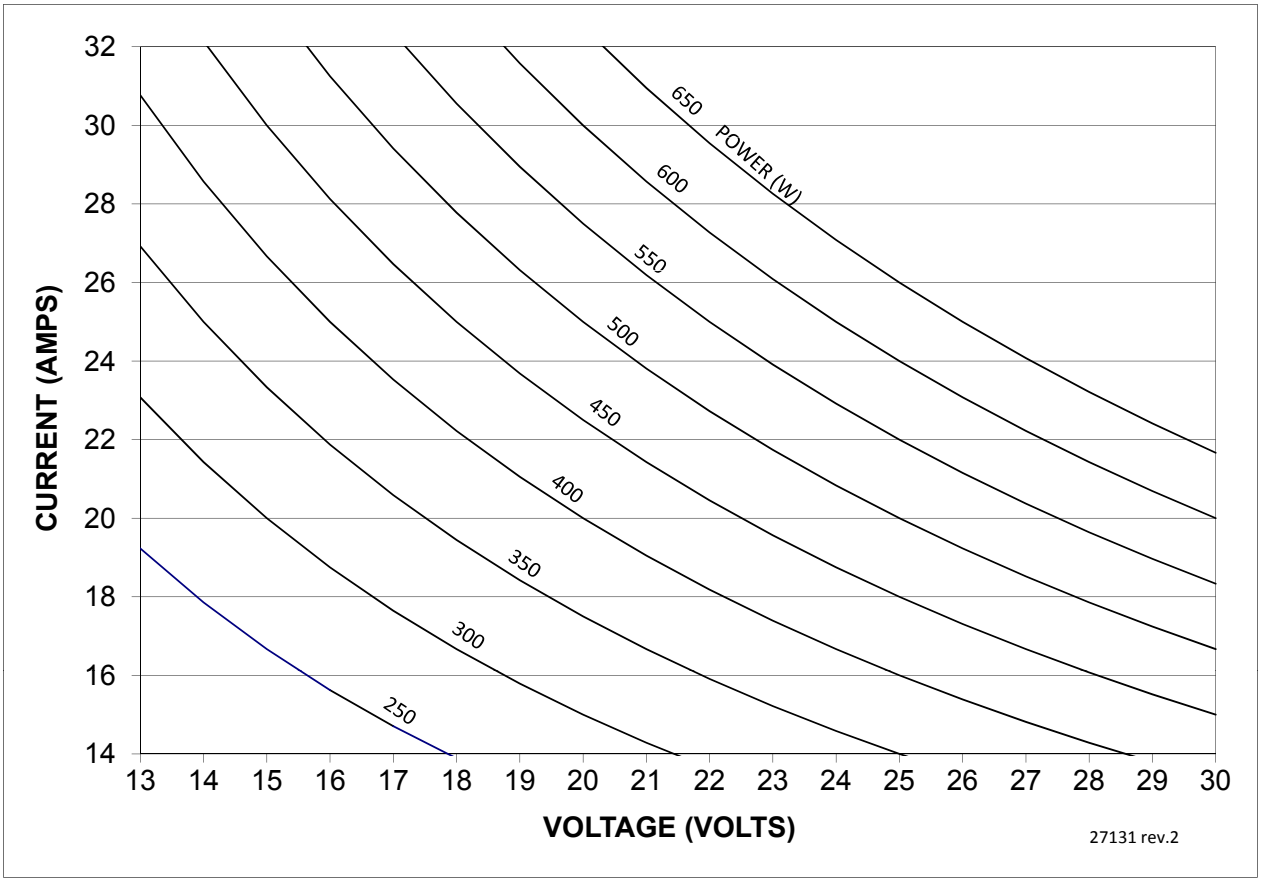

Figure 11 Power Calculation

2.5 Heat Up and Power Adjustment

2.5.1 Once the burner is operating the Power Unit output voltage should climb rapidly to about 25 Volts. If the voltage levels off below 25 Volts or climbs above 25 Volts adjust the power conditioner as per its manual.

WARNING: Do Not allow the power unit voltage to exceed 35 Volts. If the power conditioner fails to control the voltage, turn off the burner.

2.5.2 Once the voltage is about 25 Volts observe the Power Unit current by measuring the voltage across the Current Shunt at terminals 6(+) and 7(-) of TB-1. The shunt is rated 50 Amp/50 mV; 1 mV across the shunt equals 1 Amp. The current will initially rise rapidly and then slow down as the current reaches its operation point. Continue to monitor the Power Unit voltage at terminals 6(+) and 7(-) of TB-1. This voltage should remain at 25.0 Volts. Adjust the Power Conditioner if needed.

2.5.3 Output Power is the product of the Power Unit voltage multiplied by the Power Unit current, ie. 25.0 Volts and 22.2mV (Amps) gives 25.0 x 22.2 = 555.0 Watts. Figure 11 may be used to perform the multiplication. Find the voltage on the bottom axis and draw a line vertically up. Find the current (or mV measured across the shunt) on the side axis and draw a line horizontally across. The power is indicated by the power line nearest the intersection of the two lines, interpolate if necessary.

2.5.4 Refer back to the Start-Up Data Sheet as noted in section 2.4.4. The Power Unit output power must be adjusted to the Set Power as determined in section 2.4.4. As much as possible, keep the cabinet door closed during the warm up period. It takes about one full hour for the power to stabilize. Monitor and record the power at the 15, 30, 40, 50 and 60 minute intervals on the Start-Up Data Sheet.

2.5.5 As the heat pipes start to operate they may make some crackling sounds. This is normal. About 15 minutes after ignition check the tip of each heat pipe to see if they are getting warm. If one or more heat pipe is not getting warm, recheck them after an additional 10 minutes. If one or more heat pipe continues to remain cold up to 2 in. (50 mm) from the tip, trouble shoot the cooling system as per section 3.5. Note, during cold or windy conditions, it may be hard to notice any warming of the heat pipes. If all the fins are about the same temperature, then the heat pipe is working well.

2.5.6 As the Power Unit output power climbs, ensure that the Set Power level is not exceeded. The power level should be at about 70 to 80% of Set Power within 30 minutes after ignition. If the power is above 80% after 30 minutes, continue to monitor the Power Unit output power and be prepared to reduce the fuel pressure if the power rises above the Set Power level. If the power level rises more than 10 watts above Set Power, initially reduce the pressure by 1 psi and wait 3 minutes, then determine if further adjustment needed. Remember that it will take up to 10 minutes for the full effect of the fuel pressure change to stabilize. Record any changes in fuel pressure on the Start-Up Data Sheet. If the power level is less than 70% after 30 minutes, the fuel pressure is too low but, do not adjust it until the power level has stabilized.

2.5.7 Compare the Power Unit output power at 60 minutes with that at 50 minutes. The two readings should be within 5 Watts of each other. If the power level is not yet stabilized, wait another 10 minutes. Once the power level has stabilized determine if the Power Unit output power is within about 5 Watts of the Set Power.

If the power is within 5 Watts of Set Power, proceed section 2.5.8, Air Shutter adjustment.

If the power is more than 5 Watts above Set Power, decrease the fuel pressure by approximately 1.7 kPa (0.25 psi), no more than 3.4 kPa (0.50 psi), and wait 10 minutes. After 10 minutes determine if further adjustment is needed. Once the Power Unit output power has stabilized to within 5 Watts of Set Power and stayed there for at least 15 minutes, proceed to section 2.5.8, Air Shutter adjustment.

If the power is more than 5 Watts below Set Power, increase the fuel pressure by approximately 1.7kPa (0.25 psi), no more than 3.4 kPa (0.50 psi), and wait 10 minutes. If the power is more than 20 Watts below Set Power, increase the fuel pressure approximately 3.4 kPa (0.50 psi), no more than 6.8 kPa (1.00 psi). After 10 minutes determine if further adjustment is needed. Once the Power Unit output power has stabilized to within 5 Watts of Set Power, and stayed there for at least 15 minutes, proceed to section 2.5.8, Air Shutter adjustment.

2.5.8 Once the air shutter is set to full open, the unit should run properly, and no further adjustments should be necessary. However, perform the following test to determine if the air shutter is correctly adjusted for the site conditions. Identify the air shutter parts in Figure 12. The position of the cabinet door will affect the air shutter adjustment reading. For this reason, open the door only to adjust the air shutter and keep the door closed as much as possible. Take an initial power reading after the cabinet has been shut for at least 15 minutes and record this reading on the Start-Up Data Sheet. Now close the air shutter by 3 mm (1/8 in.) and close the cabinet door. After 10 minutes take a power reading.

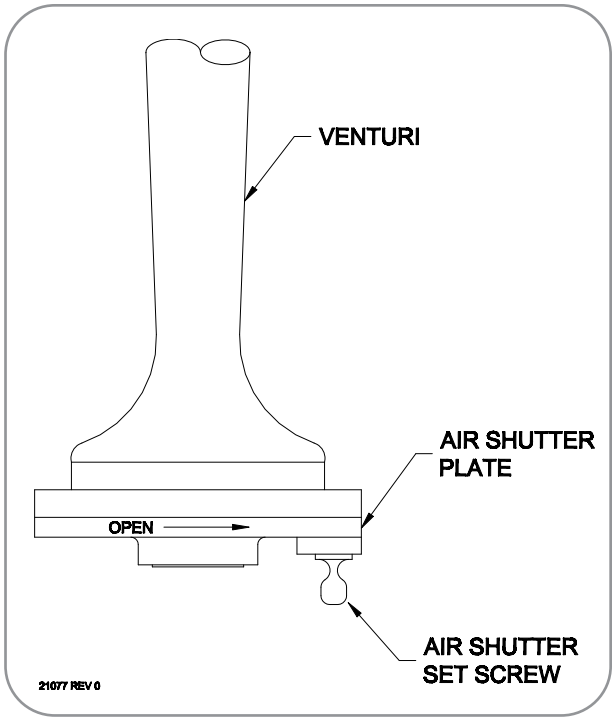

Figure 12 Air Shutter Adjustment

If this reading is higher than the initial reading, close the Air Shutter another 3 mm (1/8 in.) and wait 10 minutes. Repeat this until the power no longer rises. The air shutter must then be opened another 6 mm (1/4 in.) to allow for changes in the ambient site conditions. Again wait 10 minutes and check that the Power Unit output voltage is within 5 Watts of Set Power, adjust the fuel pressure as per section 2.5.7 if needed. Further Air Shutter adjustment will not be required.

If this reading is lower than the initial reading, open the Air Shutter 3 mm (1/8 in.) past the initial setting, close the cabinet door and wait 10 minutes. If after 10 minutes the power reading is the same or lower than the initial reading, the Air Shutter is now correctly adjusted. If after 10 minutes the power is higher than the initial reading, open the Air Shutter another 3 mm (1/8 in.) and wait 10 minutes. Repeat this until the power no longer rises. The Air Shutter must then be opened another 5 mm (3/16 in.) to allow for changes in the ambient site conditions. The Air Shutter may reach its maximum open position before the power reaches its maximum, in this case, leave the Air Shutter at its maximum setting. Wait 10 minutes and check that the Power Unit output power is within 5 Watts of Set Power, adjust the fuel pressure as per section 2.5.7 if needed. Further Air Shutter adjustment will not be required.

If this reading is the same as the initial reading, open the Air Shutter 6 mm (1/4 in.) and close the cabinet door. After 10 minutes check that the Power Unit output power is within 5 Watts of Set Power. Adjust the fuel pressure as per section 2.5.7 if needed. Further Air Shutter adjustment will not be required.

2.5.9 If the TEG is factory new or has just undergone a major overhaul, the Power Unit output power may drift slightly over the first few weeks of operation. It may be necessary to adjust the fuel pressure slightly to obtain Set Power after this time.

2.6 Applying Customer Load

2.6.1 The TEG should now be operating at the correct power level. Before applying the customer load, ensure that all wire connections are tight.

2.6.2 Adjust the Power Conditioner output to the desired customer voltage as per the Power Conditioner manual.

2.6.3 Connect the customer load to the Power Conditioner at terminals 2(+) and 4(-) of terminal block TB-1. Be sure that the Power Unit remains connected to the Power Conditioner.

2.6.4 Turn the circuit breaker on the Power Conditioner to the ON position. Close and latch the cabinet.

WARNING: The Power Unit output must always remain connected with the Power Conditioner.

2.7 System Performance Log

2.7.1 A System Performance Log is located at the back of section 3. It is recommended that this log be used to monitor system performance each time the site is visited. This information is valuable for future reference. If this site is a multiple TEG installation, it may be desirable to keep the log in a common maintenance book for the site.

8550 Thermoelectric Generator
Start-Up Data Sheet

Start-UP By:	Date:	
Model #:	Serial #:	Fuel Type:
Temperature:	Wind Speed:	
Corrected Temperature:	Ignition Fuel Pressure:	
Set Power at Corrected Temperature	Operating Fuel Pressure	

Power Levels

Time		Orifice Fuel Pressure	Voltage (V)	Current (A)	Power (W)
	(Start)				
	(15 minutes)				
	(30 minutes)				
	(40 minutes)				
	(50 minutes)				
	(60 minutes)				

8550 Thermoelectric Generator
Start-Up Data Sheet

Start-UP By:	Date:	
Model #:	Serial #:	Fuel Type:
Temperature:	Wind Speed:	
Corrected Temperature:	Ignition Fuel Pressure:	
Set Power at Corrected Temperature	Operating Fuel Pressure	

Power Levels

Time		Orifice Fuel Pressure	Voltage (V)	Current (A)	Power (W)
	(Start)				
	(15 minutes)				
	(30 minutes)				
	(40 minutes)				
	(50 minutes)				
	(60 minutes)				

3 SERVICE AND MAINTENANCE

WARNING: Throughout this manual you will notice paragraphs preceded with the word "WARNING". It is important that the advice in these paragraphs be adhered to, as failure to do so may result in damage to the generator and/or other property and/or personal injury. Before attempting to service the Model 8550 TEG, you should be thoroughly familiar with the operation of this generator. It is suggested that you review sections 1.2, 1.5, 2.4 and 2.5 and the operation of the Power Conditioner before attempting to service this TEG.

3.1 Suggested Periodic Maintenance

3.1.1 The 8550 TEG is a solid-state, highly reliable device that requires very little maintenance. However, it requires periodic service checks in order to provide the years of trouble free service of which it is capable. The maintenance interval depends on the site conditions (fuel purity, weather, etc.) and must be established on site experience. Field experience indicates that a properly installed 8550 TEG usually requires maintenance only once a year. For maximum reliability the following series of service checks are recommended.

3.1.2 At least once a year, perform a Power Check, see section 3.2. This should be the first procedure during any service visit and will determine what further service may be needed.

If the Power Unit output is more than 10 Watts above Set Power the fuel pressure must be reduced. Proceed with the basic service as per section 3.1.4, but remember to adjust the fuel pressure during restart or before leaving the site, see section 2.5.7. DO NOT continue to operate above Set Power.

If the Power Unit output is within 10 Watts of Set Power the TEG is functioning well and needs only the basic service indicated in section 3.1.4.

If the Power Unit output power is more than 10 Watts below Set Power the cause must be evaluated. Refer to the last entry in the System Performance Log. From the log determine if the TEG was left operating at Set Power during the last service visit, remember that Set Power changes with ambient conditions. If the TEG was not left operating at Set Power during the last visit determine the reason for this, the TEG will therefore not now operate at Set Power. If the TEG was left operating at Set Power during the last visit and is now not producing Set Power, the following possible causes should be considered.

3.1.2.1 Change in fuel pressure: Refer back to the last entry in the log and determine if the fuel pressure has changed. If so, readjust the fuel pressure to the last entry. If this returns the Power Unit output power to within 10 Watts of Set Power, you can proceed with the basic service as per section 3.1.4.

3.1.2.2 Obstructed air flow: Check for obstructions at the Heat Pipe fins, Air Inlet Screens and Air Shutter. Perform the Air Shutter test, see section 2.5.8. If this returns the output power to within 10 Watts of Set Power proceed with basic service as per section 3.1.4.

3.1.2.3 Change in fuel quality: In order to maintain a constant output power, it is essential that the TEG be supplied with a fuel of constant heating value.

3.1.2.4 Poor cooling by Heat Pipes: Check to make sure that the Heat Pipe fins are not obstructed by debris or dust. Check that the Heat Pipe ends are warm. Test the cooling system as per section 3.5.2.

If the above causes have been ruled out, the TEG may require more than just the basic service. Refer to section 3.1.3 for further procedures to isolate the cause of low Set Power condition, keep the TEG operating for now.

3.1.3 The procedures in this section are designed to isolate the cause for the Power Unit to have low Set Power after the causes in section 3.1.2 have been ruled out. Proceed with these tests only if previous tests in section 3.1.2 indicate that they are required, otherwise proceed to section 3.1.4.

There are three basic reasons for the Set Power to be low. These are: low or inefficient heating by the burner and fuel system, poor or inefficient cooling, or a faulty or damaged Power Unit. In order for the following test to be accurate, the TEG must have been operating continuously at 24 to 26 Volts for the last 12 hours. Take a reading of the momentary open circuit as per the procedure in section 3.8. Calculate the open circuit voltage (V_{oc}) and internal resistance (R_{INT}) of the Power Unit as described in section 3.2.

If the V_{oc} is above 56 Volts and R_{INT} is above 1.40 Ohms the Power Unit is likely faulty. The Power Unit may still be able to operate at reduced output. Consult Global Thermoelectric Inc. to determine the safe operating level for the Power Unit under your conditions.

If the V_{oc} is below 56 Volts and R_{INT} is above 1.30 Ohms the Cooling System is likely faulty, see section 3.5 for further tests.

If the V_{oc} is below 56 Volts and R_{INT} is below 1.00 Ohms the Burner or Fuel System is likely not providing enough heating. In addition to the basic service in section 3.1.4 check and replace the fuel orifice and check the complete Burner System for obstructions and damage, see sections 3.3 and 3.4. If after servicing and restarting, the Power Unit does not come to Set Power, a change in the fuel quality is likely the cause. The fuel pressure may be increased to obtain Set Power, provided the absolute maximum V_{OC} and R_{INT} as determined in section 3.8.4 is not surpassed.

WARNING: Never increase the fuel pressure without checking the maximum V_{oc} and R_{INT} limits in section 3.8.4.

3.1.4 Unless other service is indicated above the following basic service is all that will be needed.

3.1.4.1 Replace the fuel filter in the pressure regulator once a year, see section 3.3.

3.1.4.2 Drain the pressure regulator sediment bowl, see section 3.3.

3.1.4.3 Check the fuel orifice for clogging, replace if needed, see section 3.3.

3.1.4.4 Remove debris, sand and dust from the Heat Pipe fins, cabinet air intake screens and cabinet interior.

3.1.4.5 Check all bolts and wire connections for tightness.

3.1.4.6 Restart the TEG as per section 2.4 and 2.5.

3.1.4.7 Record the service and current operating parameters in the System Performance Log.

3.2 Power Check

3.2.1 The purpose of performing a power check is to determine if the TEG is operating at the correct Set Power for the current ambient conditions. First determine the Set Power for your ambient conditions as per section 2.4.4. Then check the Power Unit voltage at terminals 6(+) and 4(-) of TB-1.

3.2.2 If the Power Unit voltage is between 24 and 26 Volts, the Power Unit output power may be calculated by multiplying the voltage by the current (measured in millivolts) at terminals 6(+) and 7(-) of TB-1, see sections 2.5.2 and 2.5.3.

3.2.3 If the Power Unit voltage is outside the range of 24 to 26 Volts, remove the customer load from the Power Conditioner. Adjust the Power conditioner to obtain a Power Unit voltage of 25 Volts, and allow the Power Unit to stabilize. Then calculate the Power Unit output power as per section 2.5.3.

WARNING: Ensure that the Power Unit output wires always remain connected to the Power Conditioner input. Do not allow the Power Unit to operate in an open circuit condition for more than a few seconds.

3.3 Fuel System

3.3.1 The basic components of the fuel system are shown in Figure 13, note that some details may be different depending on fuel system options. Identify the components and their location on the TEG.

3.3.2 The fuel system consists of a pressure regulator which regulates the fuel pressure to the fuel orifice. The regulator contains both a fuel filter and integral sediment bowl with a

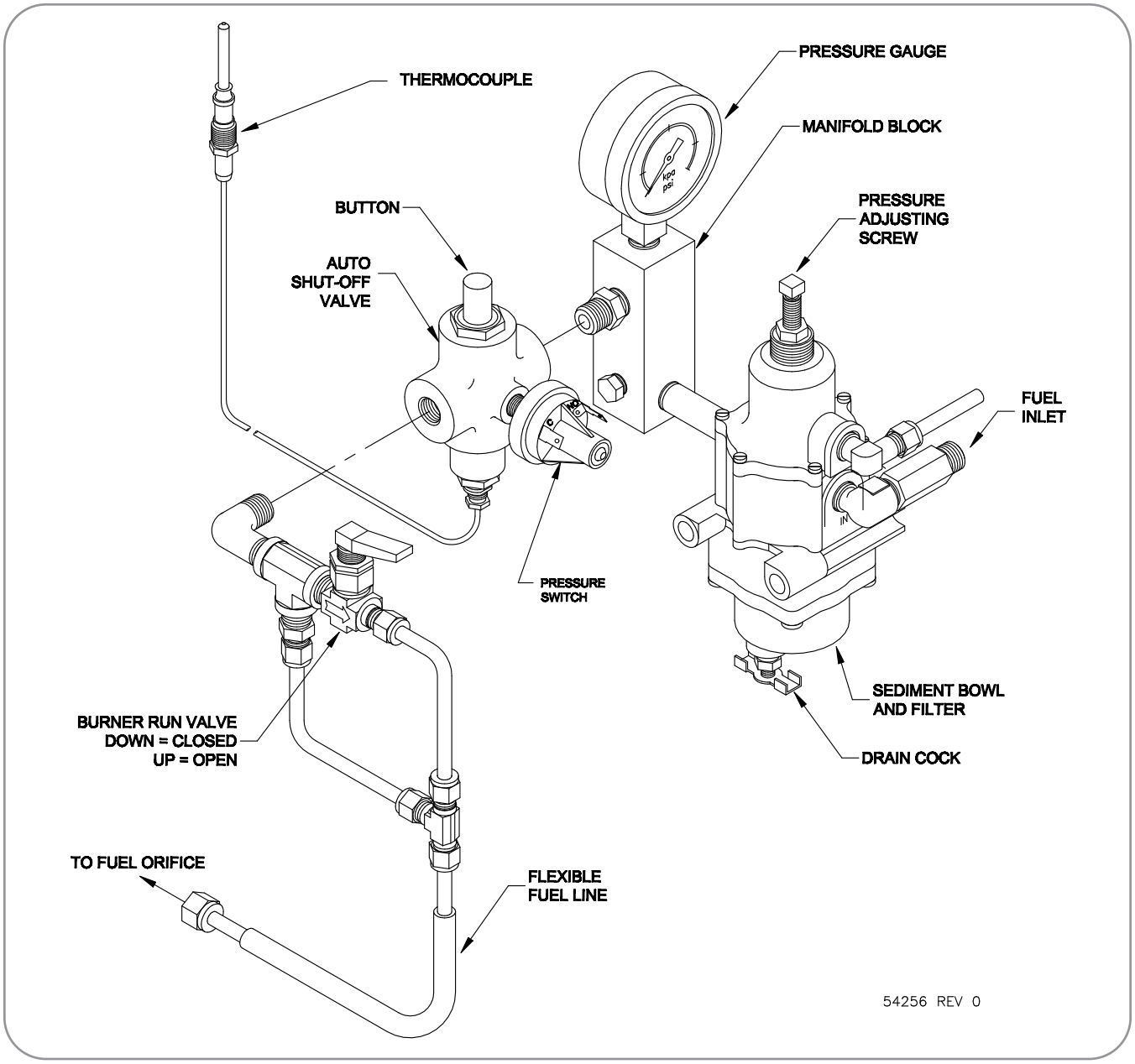

Figure 13 Fuel System Components, SI and SO

manual drain cock. The outlet of the pressure regulator is connected to a manifold and pressure gauge to monitor the fuel pressure to the fuel orifice. Between the manifold and fuel orifice there are a series of control valves and a fuel line assembly. The combination of control valves will depend on the fuel system options and usually include an Auto Shut-Off valve, Burner Run valve, Burner Start valve and Burner Start restrictor. The fuel orifice is a precision jewelled orifice which will control the fuel flow to the burner depending on the up stream pressure.

3.3.3 To service the fuel system turn off the fuel supply at the external valve.

3.3.3.1 To drain the pressure regulator sediment bowl, open the drain cock located under the pressure regulator. Use a small container to collect any liquid impurities that may have collected in the bowl. After the bowl has drained, close the drain cock.

3.3.3.2 To change the fuel filter, remove the 4 socket cap screws that hold the bottom bowl on the pressure regulator. Remove the bottom bowl and replace the filter element. Check and replace the gasket if needed. Carefully reassemble the regulator ensuring that the needle valve spring is properly placed over the needle valve centering cup in the regulator body. Check for proper operation and leak check all joints for fuel leaks.

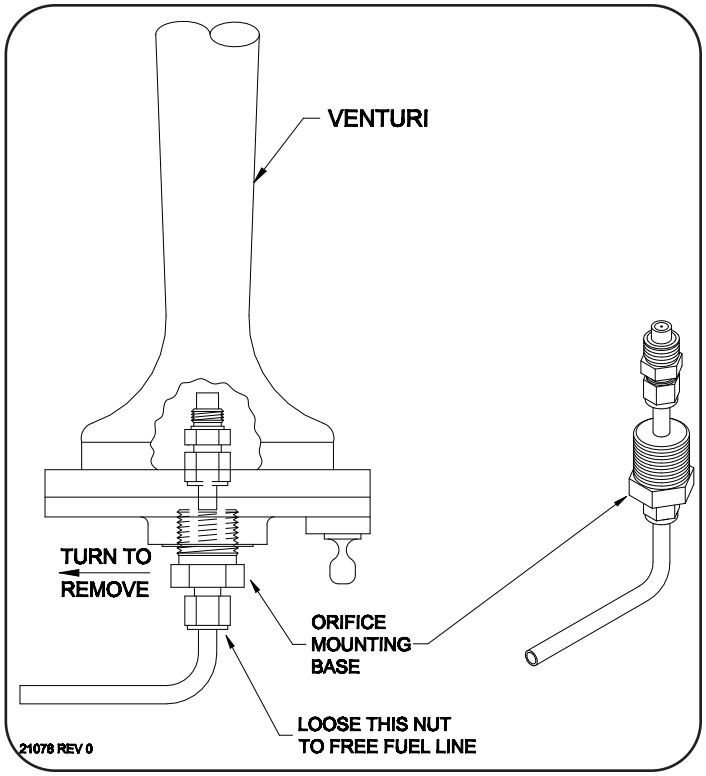

Figure 14 Orifice Assembly Removal

3.3.3.3 To change the fuel orifice, disconnect the flexible fuel line from the solid fuel line which enters the burner venturi. Remove the solid fuel line and orifice assembly by turning the orifice mounting base. Remove the orifice body from the assembly, see Figure 14. Check the orifice hole. It should be free and clean of debris. Replace the orifice body if needed. Reassemble and check for leaks.

WARNING: After any fuel system service, check for leaks.

3.4 Burner System

3.4.1 The Burner System consists of the following components:

- The Burner Venturi and Air Shutter assembly which mixes combustion air and fuel.
- The Burner Plate assembly where combustion takes place.
- The Exhaust Stack assembly which collects and exhausts the exhaust gases.

3.4.2 The Burner System should be disassembled only if there is reason to suspect a problem with the burner operation. First remove the fuel orifice as per section 3.3.3. Allow the burner to cool down before proceeding to disassemble the Burner System. Identify and locate the components from Figure 15. Remove the Venturi and Air Shutter assembly from the Burner Plate by turning the Venturi which is threaded into the Burner Plate

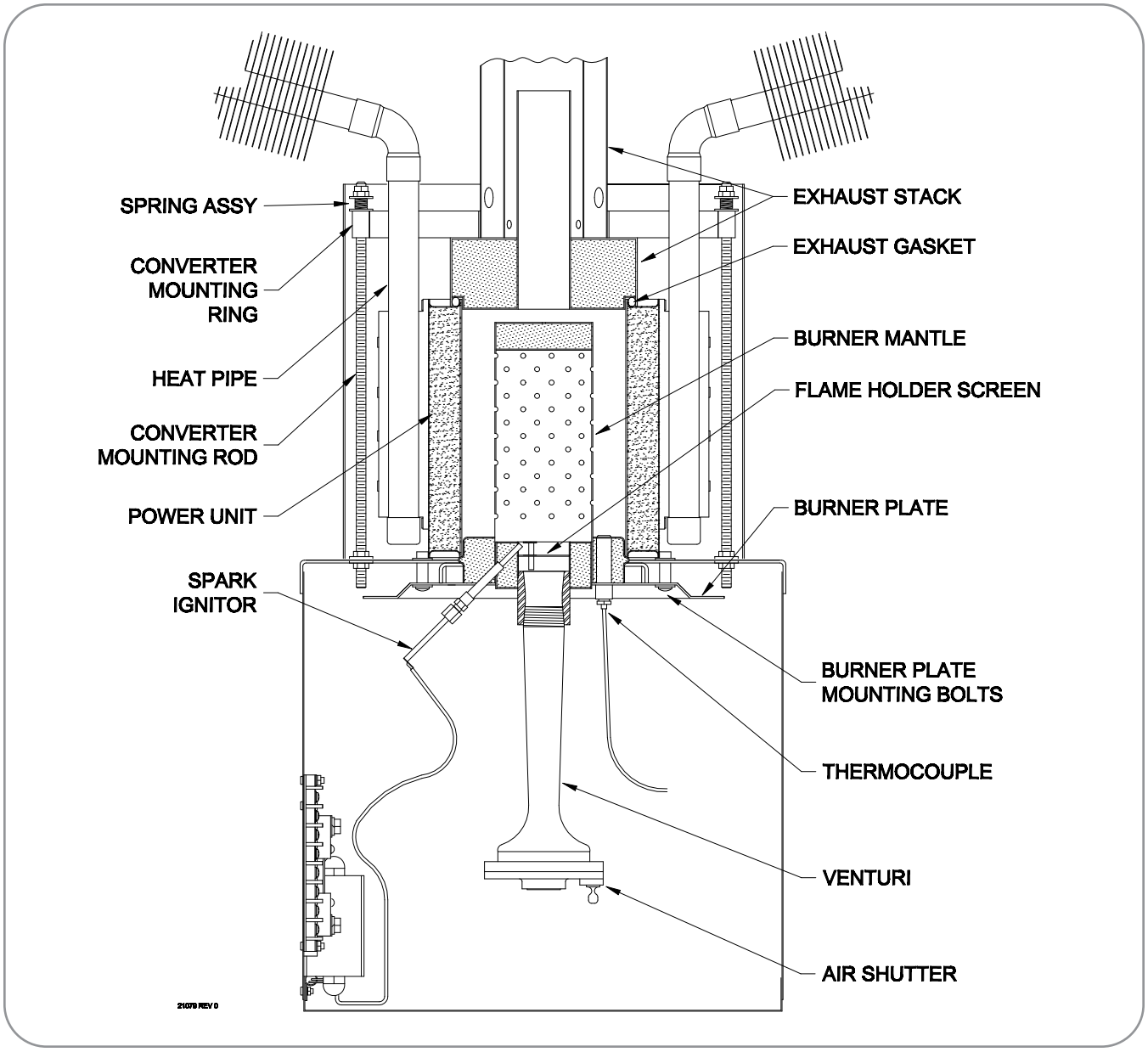

Figure 15 Burner System Components

assembly. The Air Shutter may be removed from the Venturi by closing the Air Shutter completely and removing the four screws which are located in the openings in the Air Shutter plate. The Burner Plate assembly is removed by removing the four Burner Plate mounting screws, the Burner Plate assembly can then be pulled down out of the Power Unit.

3.4.3 Check the Air Shutter assembly and Venturi for corrosion or obstructions. Check the Flame Holder Screen, located in the Venturi mounting fitting on the Burner Plate assembly, and the Burner Mantle for corrosion or obstructions. If these parts are obstructed, clean them with a stiff wire brush. If these parts are corroded, the Burner must be repaired or replaced.

3.4.4 With the Burner Plate assembly removed, examine the Exhaust Stack through the Power Unit. Remove any obstructions and check for corrosion. If the Exhaust Stack is corroded, it must be replaced as follows. Remove the Converter Shroud which covers the

lower portion of the Heat Pipes. Note that it is not necessary to remove the Heat Pipe support frame to do this. Then remove the four nut and spring assemblies which hold down the Converter Mounting Ring. Before removing the Converter Mounting Ring, mark its position so that it will be replaced in the same position. The Exhaust Stack can now be lifted off. When replacing the Exhaust Stack, check that high temperature Exhaust Gasket is in good condition, replace if necessary. The spring assemblies which hold the Converter Mounting Ring should be tightened until the springs are solid, then backed off about 5 turns (1/4 in. or 6 mm).

3.4.5 Always apply high temperature anti-seize compound to the threads on the Venturi before installing it. It is not necessary to tighten the Venturi more than hand tight.

3.5 Cooling System

3.5.1 The Cooling System consists of a set of twelve Heat Pipes. Each Heat Pipe is hermetically sealed and contains a measured amount of fluid in equilibrium with its vapour. As heat is applied to the fluid, it boils and then re-condenses in the upper portion due to the cooling effect of the fins. In this way, heat is transferred to the cooling fins in a very efficient manner.

In order to test the operation of the Heat Pipes the TEG must be operating. There are two ways to test the Heat Pipes. The first method described in section 3.5.2 is not as accurate but requires no additional equipment. The second method described in section 3.5.3 gives more accurate results, but requires more time and equipment. Any Heat Pipe which has been physically damaged and/or has a hole in the hermetic pipe is no longer operable and must be replaced. Do not operate the TEG if it has a damaged Heat Pipe.

3.5.2 With the TEG in operation check that the Heat Pipe tips are warm. Any Heat Pipe which is not warm up to 50 mm (2 in.) from the tip should be checked using the procedure in section 3.5.3. Note that during cold or windy conditions, it may be hard to notice any warming of the Heat Pipe. Feel along the fins of the Heat Pipe. If all the fins are about the same temperature, the Heat Pipe is working well. If one or more Heat Pipes feels much colder that the rest of the Heat Pipes, it should be checked using the procedure in section 3.5.3.

3.5.3 For this procedure, a thermocouple meter with a 50 mm (2 in.) long surface probe no more than 5 mm (0.2 in.) in diameter is required. The meter should be able to read temperatures up to 150ºC (300ºF), and should be accurate to ±1ºC (2ºF).

This procedure involves taking a temperature profile of the Heat Pipe Condenser Tube (the part of the Heat Pipe which passes through the cooling fins). It is important that the surface temperature of the tube is taken and not the temperature of the fins or the air around the tube. A good Heat Pipe should have a Condenser Tube temperature profile which is constant until the very tip of the Condenser Tube. Before taking the Condenser Tube temperature profile, the TEG should be operating for at least one hour in calm weather conditions.

It is suggested that you start the temperature profile between the third and fourth fin from the inside, Power Unit end of the Condenser Tube at the bottom surface of the tube. Take readings about every 50 mm (2 in.) along the Condenser Tube. All readings should be within 5ºC (9ºF) of each other up to the end of the finned section of the Condenser Tube. If the temperature profile drops by more than 5ºC (9ºF) along the finned section, take more readings to locate the point where the temperature drops. If this point is within 7 fins of the last fin on the Condenser Tube, or all the readings were within 5ºC (9ºF) of each other, the Heat Pipe is working well. If this point is more than seven fins away from the last fin on the Condenser Tube, the Heat Pipe has deteriorated and should be replaced. A problem should be suspected with any Heat Pipe which is operating at a temperature much lower than the rest of the Heat Pipes.

3.5.4 Replacement of Heat Pipes should only be done by a factory trained technician, consult Global Thermoelectric for this type of work.

3.6 Spark Ignition (SI)

3.6.1 The Spark Ignition system consists of three major components:

- The Spark Electrode which ignites the gas.
- The Pressure Switch which turns on the system when there is fuel gas pressure in the fuel system.

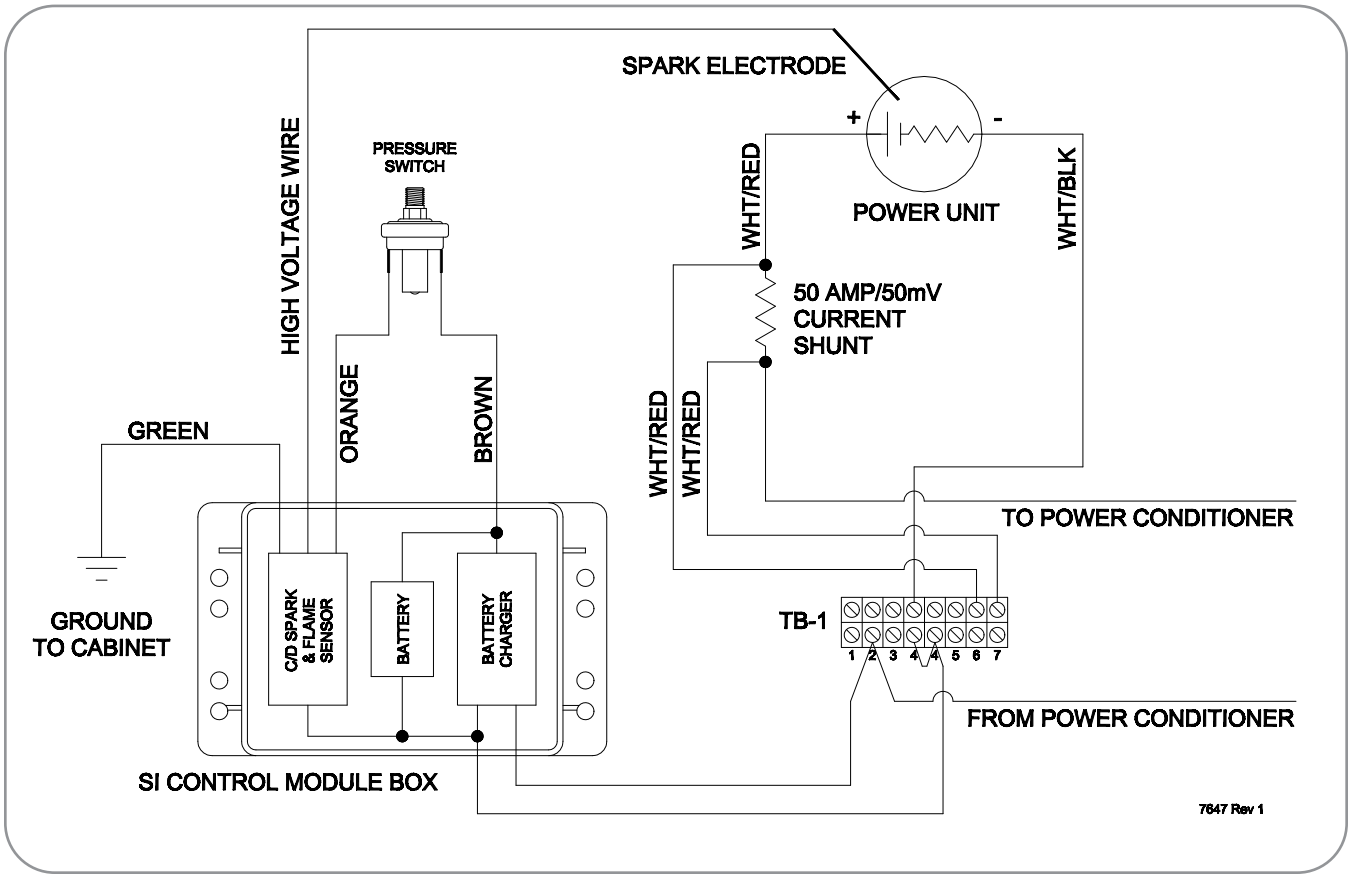

Figure 16 Spark Ignition System Wiring

- The Control Module which generates the high voltage pulse for the Spark Electrode and controls the function of the system.

Whenever there is adequate fuel pressure in the Fuel System, the Pressure Switch is closed. With the Pressure Switch closed, the Control Module will generate 12 kV pulses which will arc from the Spark Electrode. The Control Module will continue to generate the high voltage pulses until it senses the presence of high temperature gas at the Spark Electrode or until the Pressure Switch is opened.

The Control Module contains a 2 Volt, 2.5 Amp Hour rechargeable battery and a constant potential battery charger. A new fully charged battery provides about 16 hours of continuous starting capability without recharging. Twenty minutes of recharging is sufficient for one start cycle, 15 hours of charging are required to fully recharge a full discharged battery.
The Control Module also contains a capacitive discharge high voltage generator and EMI filter.

Figure 16 shows the Spark Ignition system wiring and Figure 17 shows the location of the Spark Ignition system component locations.

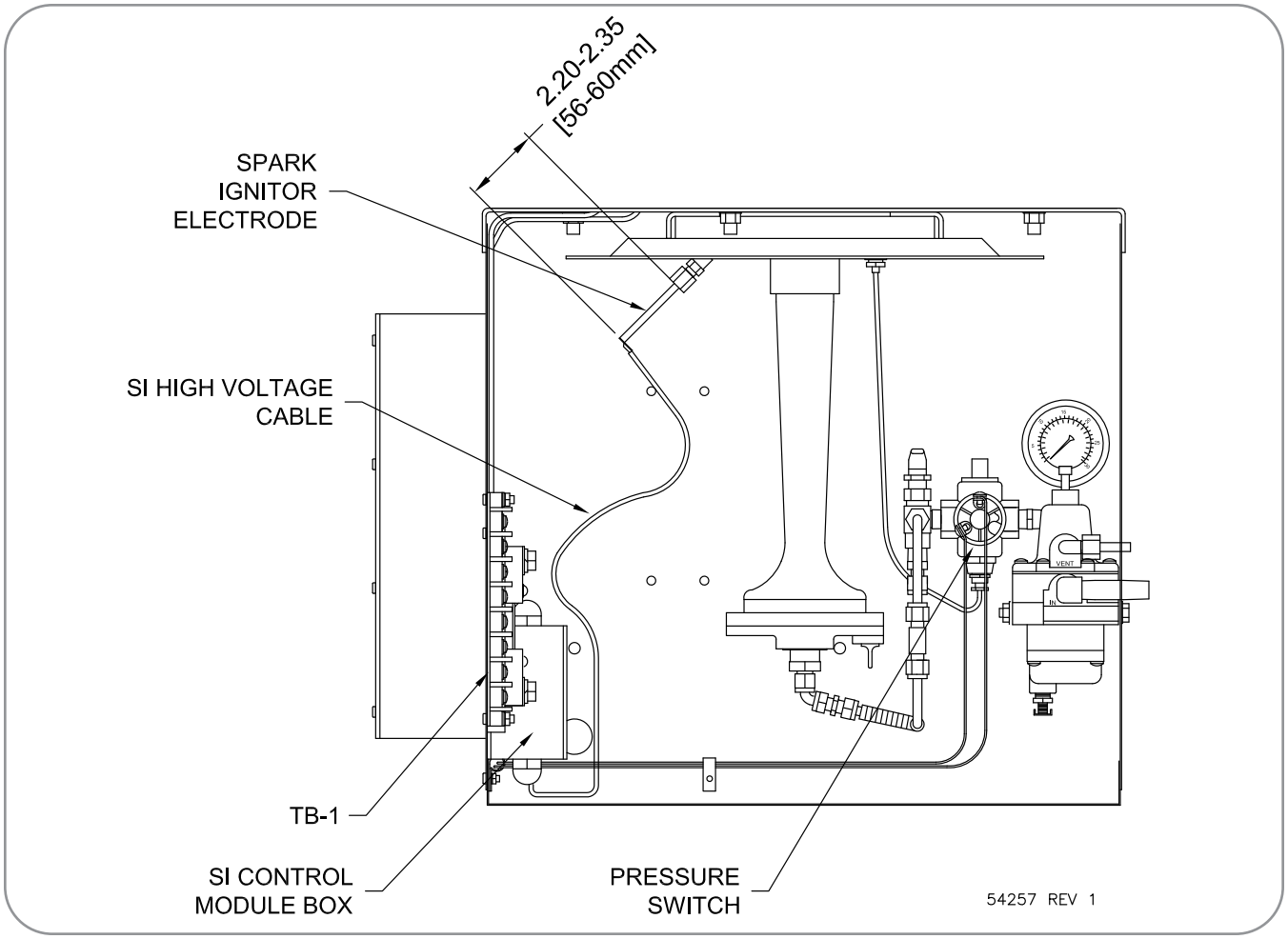

Figure 17 Spark Ignition Components

3.6.2 If the Spark Ignition System is malfunctioning follow the procedure below to isolate the problem.

3.6.2.1 TCheck that the spark gap is correct. Loosen the fitting on the bottom side of the burner and slide the Spark Igniter Rod in until it touches, then pull back approximately 1/4” [6mm]. This should leave 2.20” to 2.35” [56 to 60mm] extruding beyond the fitting, see Figure 17. Once this is confrimed proceed as follows:

3.6.2.2 To prevent high voltage shock remove the orange wire from the Pressure Switch and isolate it so that it cannot come into contact with the other electrical connections.

3.6.2.3 Carefully remove the Spark Ignitor Electrode assembly loosening the fitting and sliding out the electrode.

3.6.2.4 Inspect the Spark Ignitor Electrode for cracks in the ceramic tube. Check the wire which runs through the ceramic tube for continuity. Replace the Spark Ignitor Electrode if it is damaged.

Table 4

Spark Ignition Control Module Specifications		
Electrical	Input Voltage	Minimum 4.0 Volts
		Maximum 30.0 Volts
	Input Current	Maximum 150 mAmps with TEG operating
	Output Voltage:	Minimum 12 k volts
	Spark Rate:	1 - 3 Hz
	Noise Conducted	40 m volts P-P
		28 m volts RMS
Operating Temperatures	Control Module:	-55 ºC a +65 ºC
		-67 ºF a +149 ºF
	Wire Assemblies:	-55 ºC a +200 ºC
		-67 ºF a +392 ºF
	Spark Electrode:	metal conductor (Haynes 214)1490 ºC or 2700 ºF
		Ceramic Tube (alumina) 1926 ºC or 3500 ºF
Control Module Life		5 x 10^6 Sparks Minimum
Continuous Operating Time without Charge		16 hours with Full Charged Battery @ 23ºC (73ºF)

Table 5

Spark Ignitor Battery Specifications		
Type	Sealed Lead Acid	
Nominal Cell Voltage	2.0 Volts	
Capacity Rating: @ 23ºC (73ºF)	125 mA Rate	2.7 Amp Hr
	250 mA Rate	2.5 Amp Hr
Cell Temperature	Storage	-40 ºC to +45 ºC -40 ºF to +113 ºF
	Discharge	-40 ºC to +45 ºC -40 ºF to +113 ºF
	Charge	-40 ºC to +45 ºC -40 ºF to +113 ºF
Storage Time	At 0 ºC (32 ºF)	7200 days
	At 23 ºC (73ºF)	1200 days
	At 65 ºC (149 ºF)	60 days
Expected Float Life	8 years	

3.6.2.5 To test the function of the SI Control Module, position the Spark Ignitor Electrode tip such that there is a 3 mm (1/8 in.) gap to the TEG cabinet. Then touch the orange wire connector to the Pressure Switch. Arcing should occur at the gap at the rate of about one per second. If arcing occurs the system is functioning well.

3.6.2.6 Check the Pressure Switch. The switch should close at fuel pressures greater than 16 kPa (2.5 psi). Replace the Pressure Switch if necessary.

3.6.2.7 Check the battery voltage by measuring the voltage between the brown wire at the Pressure Switch and the thin white/black wire at terminal 4 on TB-1. The voltage should be greater than 2.0 Volts. If the voltage is less than 2.0 Volts, the battery needs recharging. In order to start the TEG with a low battery, remove the thin white/red and white/black wires from terminals 2 and 4 on TB-1 and apply a 30 Volt source to the wires. The TEG may then be started, reconnect the wires and wait for the battery to recharge. If after recharging, the battery does not hold voltage, replace the battery and/or the SI Control Module.

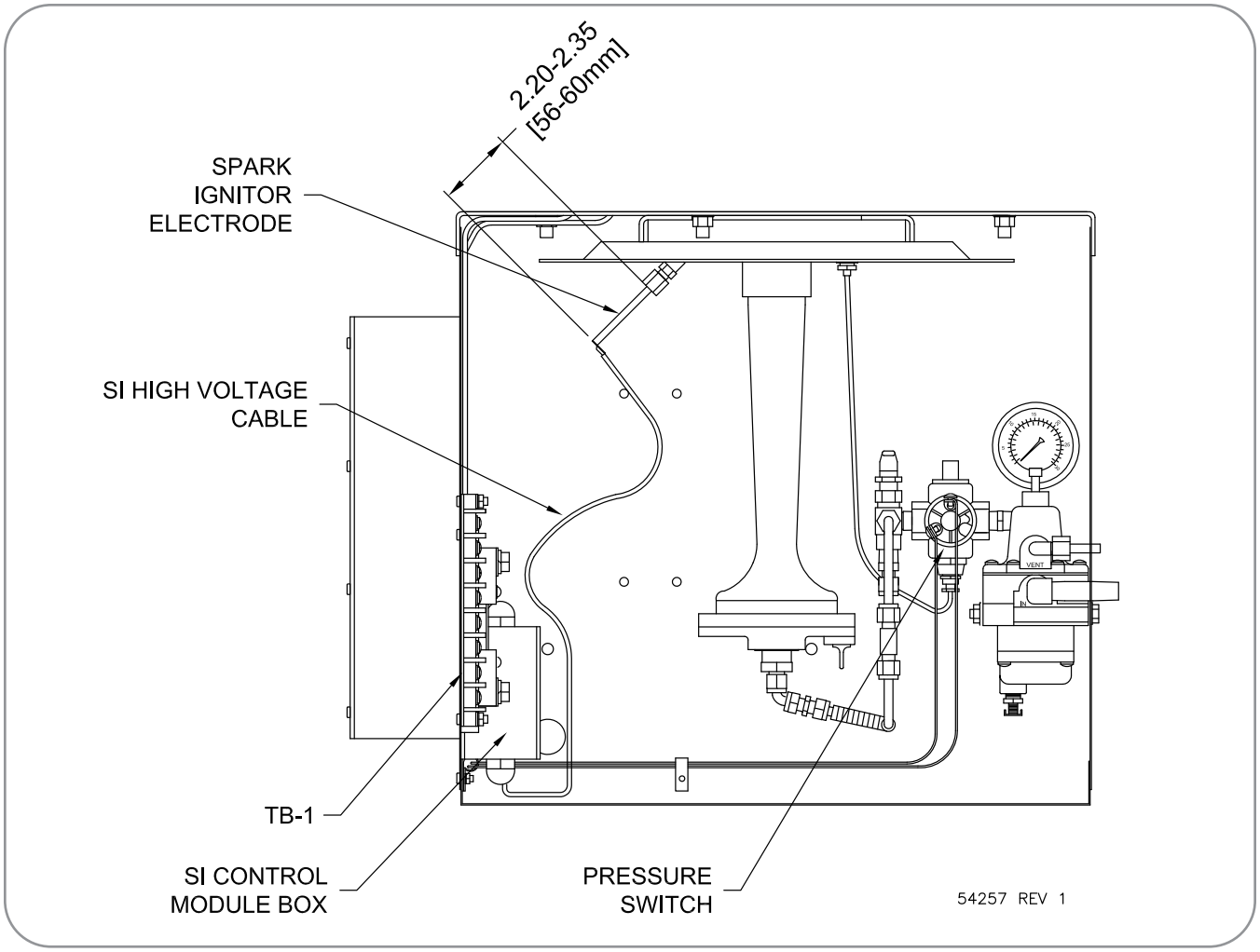

Figure 18 Automatic Shut-off Components

3.7 Automatic Shut-Off (SO)

3.7.1 The Automatic Shut-Off system is designed to turn off the fuel supply to the TEG in the event of a flame outage. The Shut-Off Valve contains an electromagnet that is powered by a thermocouple mounted in the Burner Plate assembly. When the thermocouple is no longer heated by the flame, the current will drop to zero, causing the electromagnet to allow the valve to close. The system is the same as that found in most gas appliances. Figure 18 shows the location of the system components.

3.7.2 If the Automatic Shut-Off system malfunctions proceed as follows:

3.7.2.1 Check that the thermocouple sensor is installed correctly in the Burner Plate assembly. Check that the thermocouple fitting is installed tightly in the Shut-Off Valve. Always use high temperature anti-seize compound on the Burner Plate fitting.

3.7.2.2 Check the thermocouple sensor function. Remove the thermocouple fitting from the valve. If the sensor is hot, check for a voltage between the cap in the center of the fitting and the sensor case, there should be about 15 to 30 mVolts. If there is not voltage or continuity of the sensor, replace the

sensor. Always use high temperature anti-seize compound on the Burner Plate fitting.

3.7.2.3 If the sensor is functioning and the system still does not hold the Shut-Off Valve open with a hot burner, then the valve must be replaced. Note that in order for the Shut-Off Valve to engage, it is necessary to fully depress the button on the valve. When installing the new valve, ensure that you do not introduce any pipe thread sealing compound or other contaminants into the piping and also check for fuel leaks.

3.8 Power Unit Testing

3.8.1 The Power Unit contains the thermoelectric materials which actually produce the electrical power. This unit is hermetically sealed because the thermoelectric materials are adversely affected by exposure to air at operating temperatures. Because of this hermetic seal the Power Unit cannot be repaired after leaving the factory. The procedures below are designed to evaluate the conditions of the Power Unit and to determine its operating point. These procedures should only be done if a problem with the Power Unit is suspected, they serve no other purpose.

3.8.2 Open circuit voltage and internal resistance test: The purpose of this test is to determine the momentary open circuit voltage (V_{oc}) of the Power Unit from which the internal resistance (R_{INT}) can be calculated. In order for this test to be accurate, the TEG must have been operating for the past 12 hours at 24 to 26 Volts.

3.8.2.1 Measure and record the Power Unit current (I) at terminals 6(+) and 7(-) of TB-1.

3.8.2.2 Attach a voltmeter to read the Power Unit voltage at terminals 6(+) and 4(-) of TB-1. The voltmeter leads must be attached to these terminals because you will need both hands free to do the open circuit test.

3.8.2.3 Measure and record the Power Unit loaded voltage (V_L).

3.8.2.4 Record the momentary open circuit Power Unit voltage (V_{oc}). This is best done by removing the positive lead (Wht/Red) from the bottom of the shunt. With one hand, hold the connector firmly to the shunt until you have removed the screw, then remove the connector and take the voltage reading. The reading must be taken within 3 seconds. Immediately reconnect the wire to the shunt. See Figure 9. DO NOT allow the Power Unit to remain in open circuit for more than 20 seconds. Record the open circuit voltage. If it is necessary to take reading again, wait at least 10 minutes with the Power Conditioner connected so that the Power Unit can stabilize.

3.8.2.5 Calculate the internal resistance (R_{INT}) using the equation:

$$R_{int} = \frac{(V_{oc} - V_L)}{I}$$

Where: R_{INT} = internal resistance in Ohms
V_{OC} = Power Unit open circuit voltage
V_L = Power Unit loaded voltage
I = Power Unit load current

WARNING: Do Not allow the Power Unit to operate in the open circuit condition for more than 20 seconds. Turn off the fuel supply if you cannot reconnect the Power Conditioner.

If this test was conducted because the Power Unit power was below Set Power, see section 3.1.3 for test result diagnostic.

3.8.3 If the Power Unit is producing Set Power the open circuit voltage (V_{oc}) should be in the range of 52 to 56 Volts, and the internal resistance (R_{INT}) should be in the range of 1.10 to 1.35 Ohms. Note that if the TEG has just been started less than 10 hours ago or has been stopped and restarted several times in the past days, its internal resistance may be somewhat higher.

3.8.4 The maximum operating limits are 56.5 Volts for open circuit voltage and 1.45 Ohms for internal resistance. If the Power Unit will not produce Set Power and problems with the Burner System, Fuel System, and Cooling System have been ruled out, the fuel pressure may be increased until one of the above limits or Set Power is reached. Remember that it will take at least 15 minutes for a change in fuel pressure to take full effect. See also sections 2.5.7 and 2.5.8.

If the Power Unit will not produce Set Power without exceeding these limits, or does not respond to increasing fuel pressure, the Power Unit may be damaged. Note that in some cases the Power Unit can operated at derated power, consult Global Thermoelectric for further information.

WARNING: Do not operate the Power Unit above Set Power, maximum open circuit voltage or maximum internal resistance.

3.9 Trouble Shooting Guide

3.9.1 When the TEG is not operating correctly it is necessary to determine which part is faulty. First ensure that all wires are making good contact and are connected correctly. Then isolate the customer load from the Power Conditioner. Refer to Table 6 as a guide to trouble shooting the TEG and consult the indicated sections of this manual for further information.

Table 6

Trouble Shooting Guide		
Symptom	**Cause/Remedy**	**Section**
Burner does not ignite	Air in fuel line	2.3
	No fuel at orifice	
	a) low gas pressure	2.3
	b) regulator setting	2.4.5
	c) dirty fuel filter	3.3.3
	d) plugged orifice	3.3.3
	e) Burner run valve open	2.4.5
	With Spark Ignition Option SI	
	a) Check Function of SI system	3.6
Burner does ignite but will not continue to burn	Burner Run Valve closed	2.4.5
	Fuel System	
	a) Low Gas pressure	2.3
	b) Regulator setting	2.4.5
	c) Dirty Fuel	3.3.3
	d) Plugged Orifice	3.3.3
	With Auto Shut-off Valve	
	a) Check SO Thermocouple	3.7.2
	b) Faulty Shut-off valve	3.7.2
Power Unit output power low	Incorrect power unit voltage, output power low	3.2
	Check that you are using the correct set power for current conditions.	1.5.2
	Follow evaluation procedure in sections 3.1.2 and 3.1.3	3.1.2 y 3.1.3
	Test Power unit	3.8
	Check function of Power conditioner	Separate Manual
Power Unit Output Power High	Incorrect Fuel pressure	3.1.2
	Check Function of Power Conditioner	Separate Manual

3.11 8550 TEG Parts List

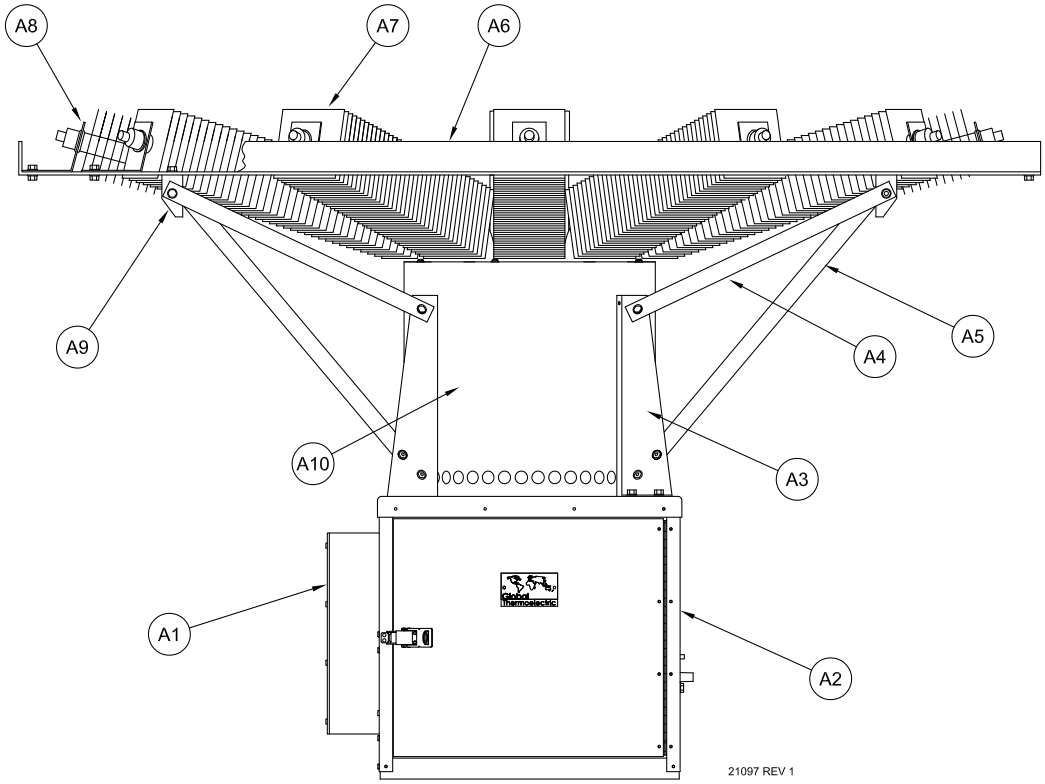

Figure 19 8550 TEG Parts List

Item	Part No.	Description
A1	6300-03162	Limiter, Model 6720
A2	6200-21611	Cabinet Assy
A3	4900-06431	Support, Upright, Heat Pipe
A4	4900-06394	Support Arm, Upper, Heat Pipe
A5	4900-06395	Support Arm, Lower, Heat Pipe
A6	4900-06393	Support Ring, Heat Pipe
A7	4900-22895	Heat Pipe Assy, Water/Methanol (Orange tip)
see	4900-22896	Heat Pipe Assy, Water/Ethanol (Black tip)
note 1	4900-22897	Heat Pipe Assy, Methanol (White tip)
A8	4900-06396	Heat Pipe Clip
A9	4900-06397	Support Bracket
A10	4900-06398	Converter Shroud

Note 1:The Heat Pipe Assy type will vary depending on the TEG type as follows:

Warm Ambient:	uses 12 each of 4900-22895
Cold Ambient:	uses 6 each of 4900-22897 (white tip) alternating with 6 each of 4900-22896 (black tip).
Medium Ambient:	uses 12 each of 4900-22896

Check the colour of the tip of the Heat Pipe to determine which type to use.

3.10.1 8550 TEG Parts List

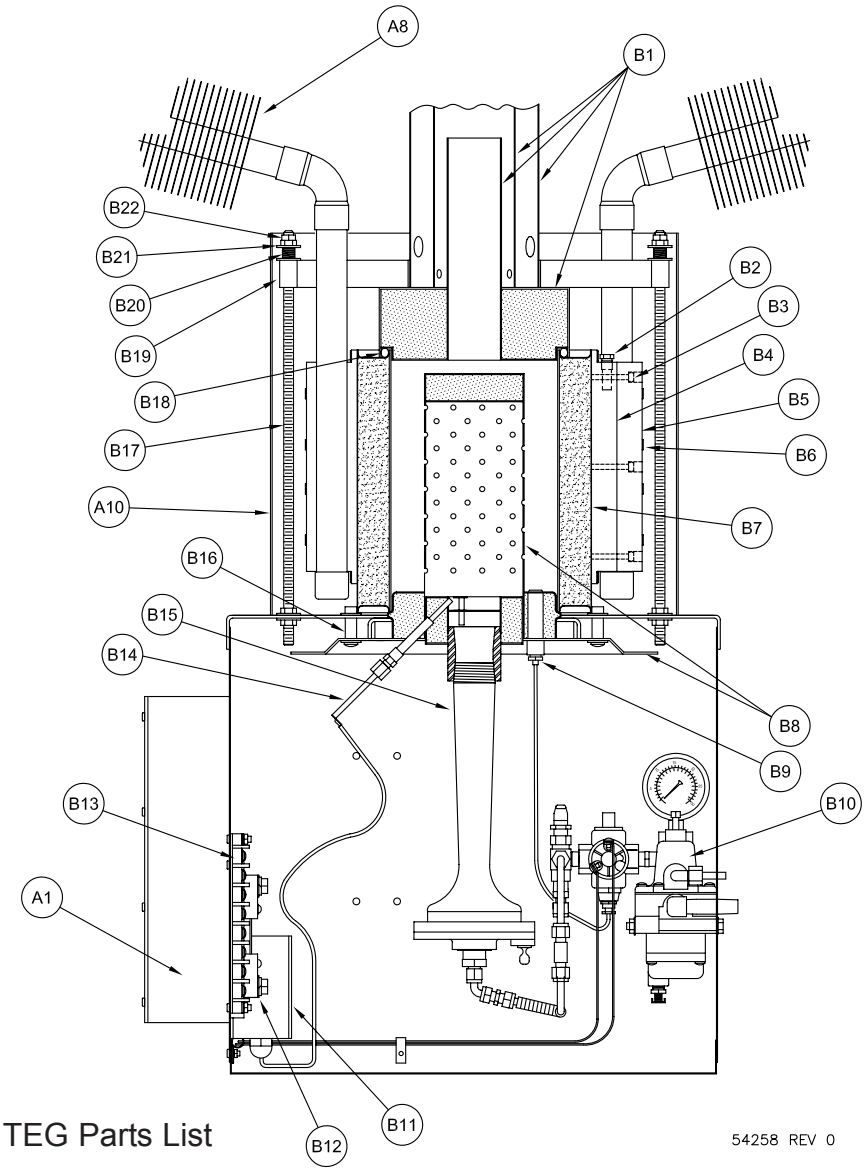

Figure 20 8550 TEG Parts List

Item	Part No.	Description
B1	4500-05406	Exhaust Stack Assy, 8550
B2	3054-50506	Plug, 1/4 MNPT, Hex, Brass, B-4-P
B3	2510-02104	Screw, Cap, Soc-H-Hex, 10-32 x 1", SS
B4	4900-21646	Shoe, Heat Pipe
B5	4900-06462	Block, Heat Pipe
B6	2900-06991	Clamp, Oetiker, 178-315SQ
B7	7900-08906	Power Unit, 8550
B8	6100-22490	Burner Assy
B9	3400-00177	Thermocouple, 24"
B10	6400-54253	Fuel System, Natural Gas
or	6400-54252	Fuel System, Propane

3.10.2 8550 TEG Parts List

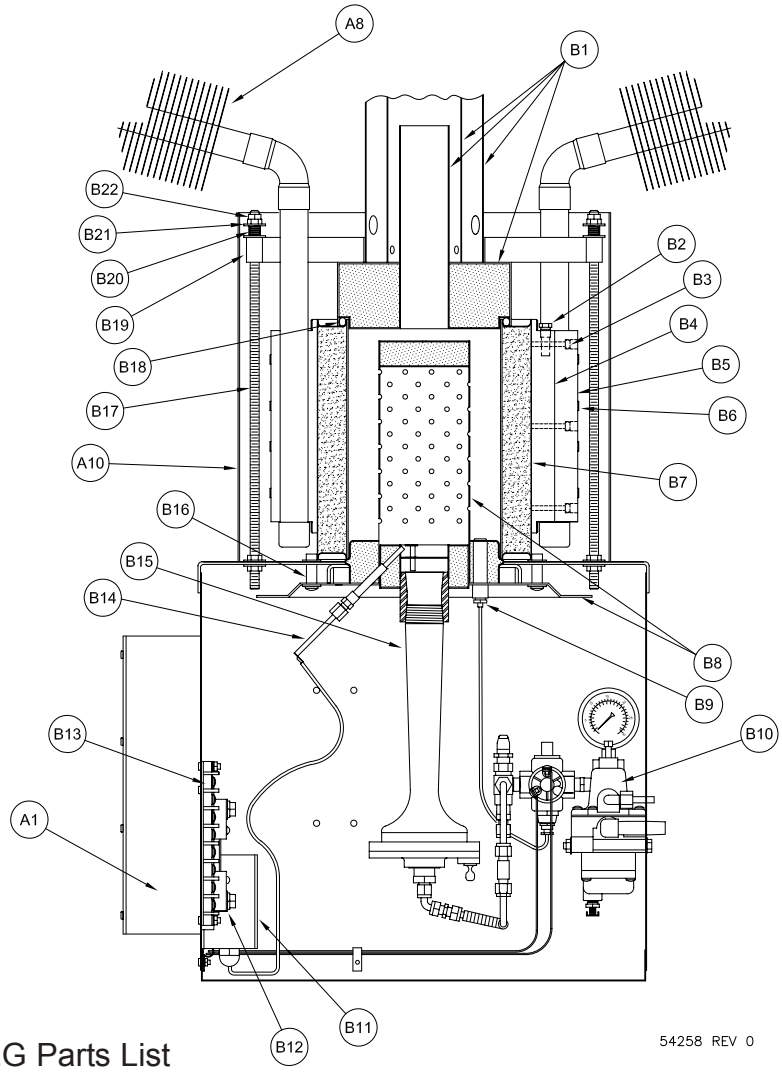

Figure 20 8550 TEG Parts List

Item	Part No.	Description
B11	6300-20144	Spark Ignitor Module
	2400-27019	Battery, 2V, 2.5 AH, D size (inside B11)
B12	2400-05238	Shunt, 50 Amp 50 mV, Bach 6709
B13	2200-02110	Terminal Block, 8 Position
B14	4900-06768	Spark Electrode Assy
B15	4000-06418	Venturi
B16	2900-06968	Stand Off, 1/2" Hex, 1/4-20 x 5/8", SS
B17	4900-06400	Mounting Rod, Converter
B18	4900-05545	Exhaust Gasket
B19	4900-06645	Converter Mounting Ring
B20	2900-05576	Spring, Spae-naur 610-403
B21	2856-05578	Washer, Flat, 5/16, SS
B22	2556-05579	Nut, Hex, 5/16-18, SS

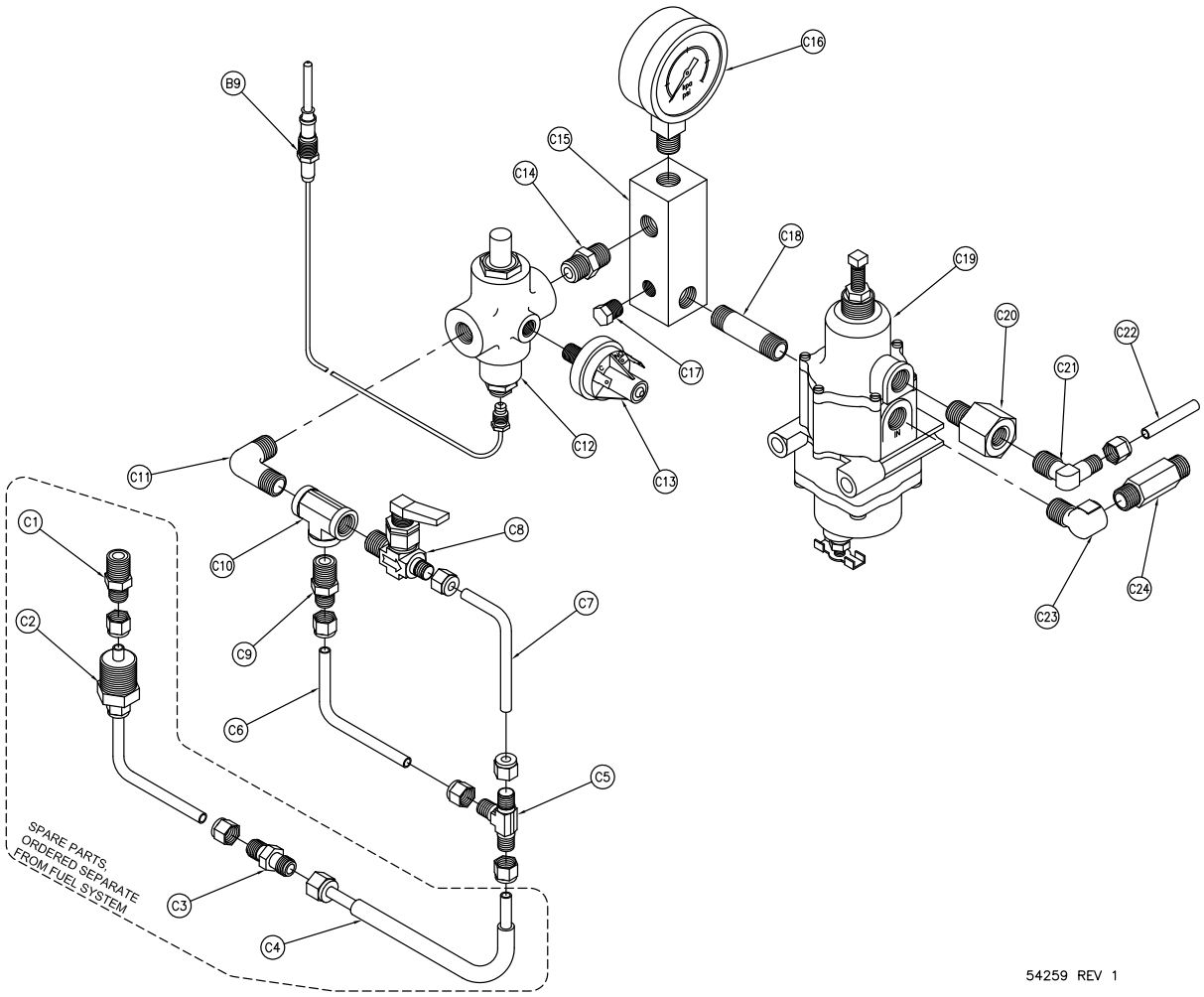

Figure 21 Fuel System Parts List, 8550 TEG

Item	Part No.	Description
C1	*4200-06434	Orifice, Propane, 0.040
or	*4200-06433	Orifice, Natural Gas, 0.061
C2	*4200-05897	Orifice Tube Assy
C3	*3084-05554	Union, 1/4 TB, B-400-6, Brass
C4	*4200-05286	Fuel Line Kit
C5	3084-05551	Union Tee, 1/4 TB, B-400-3, Brass
C6	4200-24915	Tube, Start Circuit
C7	4200-24916	Tube, Run Circuit
C8	3094-05552	Valve, Toggle, Needle, B-IGM4-S4, Brass
C9	3400-05549	Snubber, Propane, B4SMA-400W
or	3400-05550	Snubber, Natural Gas, B4SMA-400L
C10	3074–05048	Tee, 1/4 FNPT, 101-B, Brass
C11	3034-00476	Elbow, 90 , 1/4 MNPT, Brass

*Parts must be ordered separately for remainder of fuel system

3.11.1 Fuel System Parts Lists

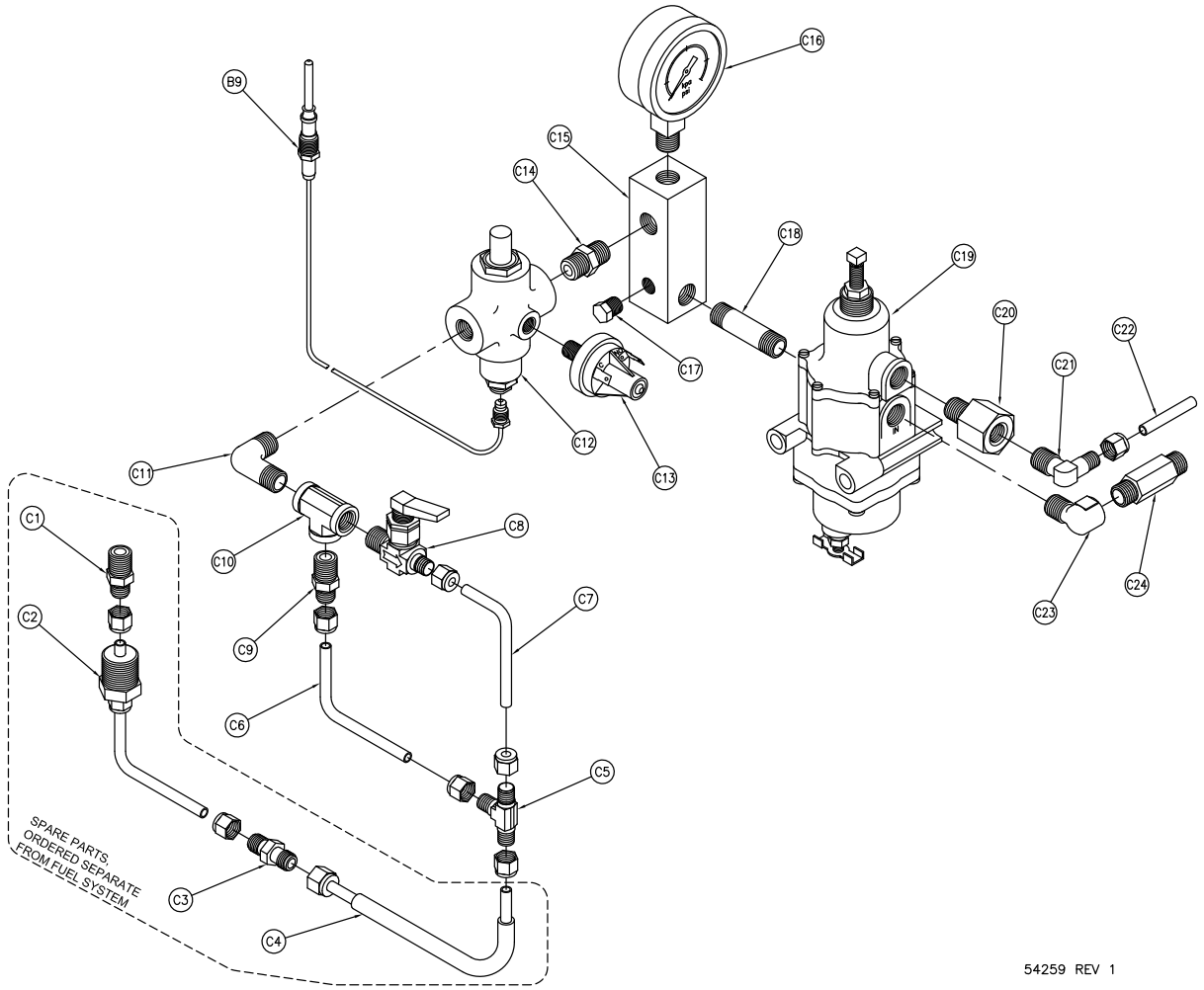

Figure 21 Fuel System Parts List, 8550 TEG

Item	Part No.	Description
C12	3090-00176	Valve, Shut-Off
C13	3400-06471	Switch, Pressure, 1.5 PSI
C14	3044-00501	Nipple, Hex, 1/4 NPT x 1 1/2", Brass
C15	4200-02100	Manifold Block
C16	3200-00406	Gauge, Pressure, 0-30 PSI
C17	3054-00432	Plug, Hex Hd, 1/8-27 NPT, Brass
C18	3044-00376	Nipple, 1/4 NPT x 2" Lg, Brass
C19	3100-22359	Regulator, 3-20 PSI, Fisher 67CFR
C20	3011-02360	Adaptor, 11/4 MNPT X 1/4 FNPT, SS
C21	3031-20071	Elbow, 1/4 TB x 1/4 NPT, SS
C22	4200-20122	Vent Tube Assy
C23	3034-00384	Elbow, Street, 1/4 NPT, Brass
C24	3044-02154	Nipple, Hex, 1/4 NPT x 2" Lg, Brass
C25	3400-22363	Filter Kit, Fisher 67CFR, 1F257706992 & T14057T0022

4 APPENDIX

4.1 Gas Specifications

Gaseous fuels provided to Global's Thermoelectric Generators:(1)

1. Shall not contain any particulates larger than 30 μm diameter, including but not limited to sand, dust, gums, crude oil, and impurities.

2. Shall not have a hydrocarbon dew point in excess of 0ºC (32ºF) at 170 kPa_g (25 psi_g).

3. Shall not contain more than 115 mg/Sm^3 (2) (approx. 170 ppm) of H_2S.

4. Shall not contain more than 60 mg/Sm^3 (approx. 88 pmm) of Mercaptan Sulphur.

5. Shall not contain more than 200 mg/Sm^3 (approx. 294 ppm) of total Sulphur.

6. Shall not contain more than 10% [CO_2] and/or [N_2] by volume, nor vary more than +/- 1% [CO_2] and/or [N_2] during operation.

7. Shall not contain more than 120 mg/Sm^3 of water vapour.

8. Shall not contain more than 1% by volume of free oxygen.

9. Shall have a nominal gross heating value of:

Natural Gas:	37 MJ/Sm^3 (1000 BTU/cu.ft.)(1)
Propane/LPG:	93 MJ/Sm^3 (2500 BTU/cu.ft.)(1)
Butane:	108 MJ/Sm^3 (2900 BTU/cu.ft)(1)

10. Shall not exceed 60ºC (140ºF) in temperature.

Notes:

(1) - For gaseous fuels outside of these specifications, please contact Global Thermoelectric.

(2) - Sm^3 = Standard cubic meter of gas at 101.325 kPa at 20ºC (NIST).

4.2 8550 Performance Log

8550 Performance Log

Model #	SERIAL #	FUEL

Date	Time	Temperature (°C)	Wind Speed (km/h)	Corr. Temperature (°C)	Set Power (W)	Fuel Pressure (psi)	Voltage (V)	Current (A)	Power (W)	Remarks

8550 Performance Log

Model #	SERIAL #	FUEL

Date	Time	Temperature (°C)	Wind Speed (km/h)	Corr. Temperature (°C)	Set Power (W)	Fuel Pressure (psi)	Voltage (V)	Current (A)	Power (W)	Remarks

C/RAWP Appendix V
Technical Memorandum: Preliminary Assessment of Proposed Mitigation Planting Areas for Final Groundwater Remedy Impacts

Topock Project Executive Abstract

Document Title: Preliminary Assessment of Proposed Mitigation Planting Areas for Final Groundwater Remedy Impacts, Topock Compressor Station, California Final Document? ☒ Yes ☐ No	Date of Document: January 27, 2015 Who Created this Document?: (i.e. PG&E, DTSC, DOI, Other) PG&E
Priority Status: ☐ **HIGH** ☐ **MED** ☒ **LOW** Is this time critical? ☐ Yes ☒ No Type of Document: ☐ Draft ☐ Report ☐ Letter ☒ Memo ☐ Other / Explain:	Action Required: ☒ Information Only ☐ Review & Comment Return to:_____ By Date: _____ ☐ Other / Explain:
What does this information pertain to? ☐ Resource Conservation and Recovery Act (RCRA) Facility Assessment (RFA)/Preliminary Assessment (PA) ☐ RCRA Facility Investigation (RFI)/Remedial Investigation (RI) (including Risk Assessment) ☐ Corrective Measures Study (CMS)/Feasibility Study (FS) ☐ Corrective Measures Implementation (CMI)/Remedial Action ☐ California Environmental Quality Act (CEQA)/Environmental Impact Report (EIR) ☐ Interim Measures ☒ Other / Explain: Biological Reports	Is this a Regulatory Requirement? ☒ Yes ☐ No If no, why is the document needed?
What is the consequence of NOT doing this item? What is the consequence of DOING this item? This memo supplements information in the revegetation/restoration plans that were included in the Construction/Remedial action Work Plan that are required by different aesthetic and biological mitigation measures in the groundwater EIR. Not providing this information would constitute non-compliance with the mitigation measures.	Other Justification/s: ☐ Permit ☐ Other / Explain:

Brief Summary of attached document:

Revegetation and restoration in the project area is expected to take place in two phases: the first phase occurring concurrently with and immediately after construction; and the second phase occurring after the system has been decommissioned and removed. This memorandum is associated with the first phase just as the final groundwater remedy system is brought on line and begins operation. The revegetation and restoration that is to be conducted pursuant to these plans includes several aspects. Some of the disturbed area within the construction footprint will be replanted with new plantings where those plants will not interfere with system operation, maintenance, or future decommissioning. Some plants, such as arrow weed, are expected to regenerate largely on their own after having been cut or trimmed to allow for construction. Some disturbed areas (such as the remedy pipeline corridors) will not be replanted until the remedy is decommissioned to allow access for operation, maintenance, and decommissioning. It will also be important to avoid placing mitigation plants in an area where their roots may adversely affect the installed underground infrastructure. In those areas where such access must be maintained in the riparian corridors, revegetation will be accomplished in the first phase by planting new plants in areas immediately adjacent to the pipeline area that must be maintained; then in the second phase, the entire area will be revegetated after the completion of the remedy system operation, when the decommissioning and removal activities have been completed. It is recognized that the future system decommissioning and removal activities may adversely affect mitigation plantings as well as natural regeneration that has occurred within the original construction footprint. These plant impacts will be addressed in the second phase of revegetation and restoration.

The areas were selected along existing or proposed access routes to facilitate future planting, monitoring and maintenance. They are also located outside of the groundwater remedy construction footprint and away from existing/planned infrastructure in order to avoid future impacts during decommissioning and removal of the remedy infrastructure. Further, it is intended that mitigation

plantings would mimic the natural spacing and patterns of the surrounding vegetation, therefore, mitigation plantings are located within the sparsely vegetated areas between existing perennial vegetation. The existing vegetation would not be affected during mitigation planting and maintenance and use of mechanical equipment in these areas will be kept to a minimum. Having consolidated areas for the mitigation plantings is important for controlling initial costs and for simplifying ongoing maintenance throughout the monitoring period.

The attached memorandum also provides specific information about each of the mitigation planting areas as well as a detailed analysis of the expected construction impacts to plants that will require mitigation based on the groundwater EIR. This impact analysis is then used to assess the potential adequacy of the proposed mitigation planting areas to accommodate the proposed plantings.

Written by: PG&E

Recommendations:

This report is for information only.

How is this information related to the Final Remedy or Regulatory Requirements:

This technical memorandum provides information that is required to address the groundwater EIR mitigation measures AES-1 and -2 and BIO-1.

Other requirements of this information?
None.

Related Reports and Documents:
Click any boxes in the Regulatory Road Map (below) to be linked to the Documents Library on the DTSC Topock Web Site (www.dtsc-topock.com).

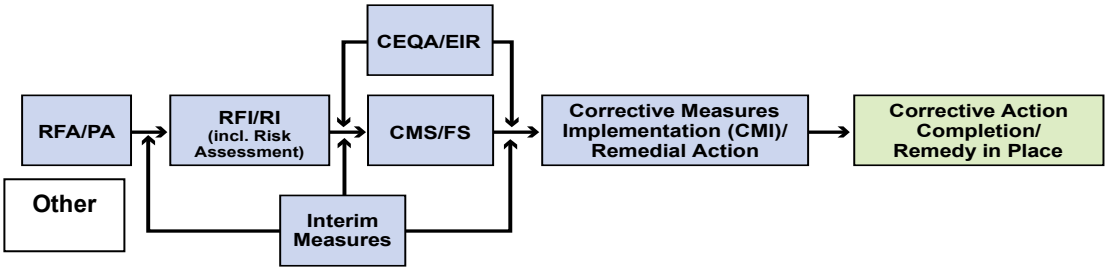

Legend
RFA/PA – RCRA Facility Assessment/Preliminary Assessment
RFI/RI – RCRA Facility Investigation/CERCLA Remedial Investigation (including Risk Assessment)
CMS/FS – RCRA Corrective Measure Study/CERCLA Feasibility Study
CEQA/EIR – California Environmental Quality Act/Environmental Impact Report

Preliminary Assessment of Proposed Mitigation Planting Areas for Final Groundwater Remedy Impacts, Topock Compressor Station, California

PREPARED FOR: Virginia Strohl/PG&E

PREPARED BY: Steve Long and Russell Huddleston/CH2M HILL

COPIES: Marjorie Eisert/CH2M HILL

DATE: January 27, 2015

PROJECT NUMBER: 433404.01.TS

Introduction

As part of the 90% Design Submittal for the Final Groundwater Remedy, three restoration plans were submitted to address impacts to plants that cannot be avoided during construction. Additionally, a separate plan was prepared to address ethnobotanically significant plants (CH2M HILL, 2013), which was submitted in compliance with the Cultural and Historic Properties Management Plan that also required mitigation for plant impacts. These plans specifically addressed plant impacts on Havasu National Wildlife Refuge (HNWR) lands (CH2M HILL, 2014a), within jurisdictional areas associated with waters of the U.S. and the State of California (CH2M HILL, 2014b); for mature plants (CH2M HILL, 2014c); and for ethnobotanically significant plants (CH2M HILL, 2013). Each of these plans describes the specific mitigation measure or regulatory requirement driving the restoration needs, as well as the general approaches that would be implemented.

This technical memorandum supplements the restoration plan submittals by providing preliminary information on the conditions within fifteen proposed mitigation planting areas in the project area in California (see Figure 1). These fifteen mitigation planting areas have been grouped into three upland habitat revegetation (UHR) units, six riparian habitat revegetation (RHR) units, and six historical floodplain revegetation (HFR) units. The historical floodplain term refers to the areas between the National Trails Highway and the ordinary high water mark of the Colorado River where dredged sands were historically deposited. The historical floodplain no longer functions as a riparian habitat with hydrologic connectivity to the river.

The purpose of this memorandum is to provide information to project stakeholders on the currently proposed revegetation areas that Pacific Gas and Electric Company (PG&E) is assessing for final design. It also evaluates the expected impacts to plants and mitigation planting area needs. Revegetation in the project area is expected to take place in two phases: the first phase occurring concurrently with and immediately after construction, and the second phase occurring after the system has been decommissioned and removed. This memorandum is associated with the first phase just as the final groundwater remedy system is brought on line and begins operation.

The revegetation and restoration to be conducted pursuant to these plans includes several aspects. Some of the disturbed area within the construction footprint will be replanted with new plantings where those plants will not interfere with system operation, maintenance, or future decommissioning. Some plants, such as arrow weed, are expected to regenerate largely on their own after having been cut or trimmed to allow for construction. Some disturbed areas (such as the remedy pipeline corridors) will not be replanted until the remedy is decommissioned to allow access for operation, maintenance, and decommissioning. It will also be important to avoid placing mitigation plants in an area where their roots may adversely affect the installed underground infrastructure. In those areas where such access must be maintained in the riparian corridors, revegetation will be accomplished in the first phase by planting new plants in areas immediately adjacent to

the pipeline area that must be maintained; then, in the second phase, the entire area will be revegetated after the completion of the remedy system operation, when the decommissioning and removal activities have been completed. It is recognized that the future system decommissioning and removal activities may adversely affect mitigation plantings as well as natural regeneration that has occurred within the original construction footprint. These plant impacts will be addressed in the second phase of revegetation and restoration.

The planting areas were selected along existing or proposed access routes to facilitate future planting, monitoring, and maintenance. They are also located outside of the groundwater remedy construction footprint and away from existing/planned infrastructure in order to avoid future impacts during decommissioning and removal of the remedy infrastructure. Further, it is intended that mitigation plantings would mimic the natural spacing and patterns of the surrounding vegetation, therefore, mitigation plantings are located within the sparsely vegetated areas between existing perennial vegetation. The existing vegetation would not be affected during mitigation planting and maintenance and use of mechanical equipment in these areas will be kept to a minimum. Having consolidated areas for the mitigation plantings is important for controlling initial costs and for simplifying ongoing maintenance throughout the monitoring period.

Analysis of the 90% Groundwater Remedy footprint within Arizona indicated only three instances where native shrubs or trees requiring mitigation would be affected. In two of those locations—between the southern portion of the Topock Marsh and the Oatman-Topock Highway—it is likely that the two honey mesquite (*Prosopis glandulosa*) shrubs can be avoided completely or require only minor trimming. The third location, a blue palo verde (*Parkinsonia florida*) shrub near the eastern shore of the Colorado River northwest of the Topock Marina, may also be possible to avoid by shifting the construction zone around a proposed well. However, if avoidance of this sole palo verde shrub is not possible, it would be more cost effective to add the few mitigation plants to the existing areas within California, rather than to create a single mitigation planting site in Arizona.

Methods

Initially, the proposed planting areas were identified in the field during an August 8, 2014, site visit with PG&E site manager Curt Russell and CH2M HILL plant ecologist Russell Huddleston. These preliminary proposed planting areas were captured using a hand-held global positioning system (GPS) unit (Model Trimble GeoXH). The mapped units were rendered onto an overview aerial photograph map and the individual mapped units were rendered onto separate detail maps that could be taken into the field. Representative photographs of the proposed planting areas are provided as an attachment to this memorandum.

A second site visit to the proposed planting areas was completed by CH2M HILL's Russell Huddleston and biologist Steve Long on November 20, 2014, in order to collect the preliminary information presented in this memorandum.

A list of factors was developed to provide a consistent basis for assessing the proposed planting areas. This list of factors included unit size, land ownership, habitat type (upland or riparian), surface soil texture, presence of sensitive resources (for example, burrows or biotic crusts), evidence of wildlife use, existing plants (species and percent cover), accessibility, visibility, nearby infrastructure, and cultural issues (as provided from the PG&E cultural resources team). These factors were then used to develop a comparison matrix for each of the proposed planting areas.

While in the field, high-resolution aerial photographic base maps were used to record trees and shrubs within each unit and note the presence of sensitive resources. Where it was apparent that there was additional plantable area associated with the proposed unit than was originally mapped, the GPS was used to re-map the boundaries. Other field-observable factors (for example, surface soil type, evidence of disturbance, wildlife use, dominant plant height range, accessibility, and visibility) were also recorded for

each unit. Factors such as unit size, land ownership, and existing infrastructure, were determined using the geographical information system (GIS) data for the Topock Program. Information on cultural resources was provided by PG&E cultural resource specialists.

It should be noted that the reconnaissance site visit in November 2014 was not conducted at a time when many annual plants would be in bloom. However, it was considered that the preliminary assessment of vegetative conditions based on the tree and shrubs would be sufficient for the purposes of this memorandum. With the exception of planting area RHR-6, all of the proposed locations were included in the protocol-level floristic surveys (GANDA and CH2M HILL, 2013).

Because the planting areas already have existing vegetation that will be preserved, the total revegetation area is not entirely available to receive mitigation plantings. The percent vegetation cover was estimated in the office using the aerial photographic base maps showing the final planting areas boundaries. Tree and shrub cover visible on the aerial photographs within each unit was then compared to visual graphics for different cover classes provided in the *Field Book for Describing and Sampling Soils*, Version 3.0 (NRCS, 2012). The estimated cover percent was increased by 50 percent and this augmented cover percentage area was subtracted from the total area of the revegetation unit to give an estimate of the total plantable area in each unit.

The preliminary assessment data were then input into a matrix table for comparison of each of the proposed units. For six selected factors (size, surface soil type, biotic soils, disturbance, accessibility, and visibility), a three-point rating system was adopted with 1 representing the lowest and 3 the highest values.
A preliminary overall ranking is provided by simply totaling all six factors for all the proposed planting area with the planting areas with the highest value considered to represent the highest priority for use.

A detailed assessment of the number of plants (including ethnobotanical trees and shrubs and their seedlings, riparian vegetation, mature plants, and cacti) requiring mitigation was completed using GIS to intersect the 90 percent design construction footprint with mapped plant information from various field plant surveys within the project area. Mature plants on the historical floodplain (27 individual plants) were primarily composed of non-native tamarisk (*Tamarix ramosissima*) but also included two creosote bush (*Larrea tridentata*) plants. Arrow weed impacts were not included in the impact assessment because the areas that would be subjected to temporary disturbance are expected to naturally recover in a relatively short amount of time. Other common species such as smaller (less than 6 feet) creosote bush, sweetbush (*Bebbia juncea* var. *aspera*), brittlebush (*Encelia farinosa*), and cheesebush (*Ambrosia salsola*), among others, were not included in the impact assessment because no special mitigation is required for these species.

Complete map books showing these data were reviewed to determine which of the plants as indicated by GIS were within the construction footprint, were near the edge of the construction footprint, or were outside of it and could likely be saved. The map book review was used to estimate the actual plant mitigation needs by determining a more accurate number for each plant species located entirely within the construction footprint and which would, therefore, likely be removed. The appropriate mitigation ratios were then applied to estimate how many mitigation plants would be required.

The amount of plantable area required to accommodate the mitigation plants was estimated by assuming a required spacing for the plants. A spacing of 20 to 30 feet was indicated for blue palo verde (Dave's Garden, 2014), so the mid-point (a 25-foot spacing) was adopted for blue palo verde, honey mesquite, and desert smoke tree. A 10-foot spacing was adopted for smaller native perennials such as Anderson's desert thorn (*Lycium andersonii*), catclaw acacia (*Senegalia greggii*), and creosote bush. A 5-foot spacing was applied to cattle salt bush (*Atriplex polycarpa*) and beavertail cactus (*Opuntia basilaris* var. *basilaris)*.

Additionally, the issue of potential uptake of hexavalent chromium by plants in the proposed planting areas was considered. This included reviewing the conclusions of a technical memorandum addressing the

potential for chromium uptake by arrow weed and potential exposure pathways (ARCADIS, 2013) and consideration of the locations of the proposed planting areas relative to the groundwater plume.

Results and Discussions

The proposed mitigation planting areas included three previously disturbed upland locations along the National Trails Highway (UHR-1, UHR-2, and UHR-3), six locations (RHR-1 through RHR-6) associated with the Western drainage including portions of the flow channel and the adjacent low terraces, and six locations on the historical floodplain (see Figures 2 through 16). These figures show the proposed planting areas in the center of the figure along with a 100-foot buffer and any proposed or existing infrastructure. The purpose of showing the buffer and infrastructure around each planting unit is to assess the context of the planting unit relative to its immediate surroundings or infrastructure that could potentially affect the replanting areas in the future (for example, during demolition and removal).

The approximate extent of the hexavalent chromium groundwater plume (areas where the groundwater contains hexavalent chromium above background levels) is shown with a blue line in Figure 1. Based on that mapping, every proposed planting area, except UHR-3, is located well outside the known hexavalent chromium plume. For this reason, the potential for increased plant uptake of chromium from the groundwater would not be an issue at these locations.

The sole proposed planting area above the known groundwater plume, UHR-3, is located on a filled area adjacent to the BNSF railroad bridge. The thickness of the fill above the adjacent historical riparian area where the dredge sand had been historically deposited was estimated to be about 45 feet. Based on this information and the fourth quarter 2013 groundwater monitoring for MW-20 just north of UHR-3, the depth to groundwater below the ground surface in UHR-3 is likely to be more than 45 feet. It is not expected that the plant roots in this small planting area will be able to reach the static groundwater table at this depth. Even if the plant roots were able to reach the contaminated groundwater plume, the expected chromium concentration in groundwater is expected to be much less than the lowest reported concentration that resulted in reduced yield of soybean (0.5 ppm in solution or about 500 μg/L). Chromium is primarily phytotoxic to plant roots, which could potentially depress plant growth, but is apparently not readily translocated to plant tops (Brown et al., 1983). For these reasons, chromium uptake by plants is not expected to be a viable exposure pathway for any plantings in UHR-3.

All of the proposed planting areas contain at least some trees and/or shrubs (see Figures 2 through 16). Creosote bush is the most common species, sometimes representing nearly all of the plant cover. Other native plants observed in the proposed planting area included blue palo verde, catclaw acacia, and Anderson's desert thorn. While none of the existing species would be affected by the proposed planting activities, all of the aforementioned plants are considered to be ethnobotanically significant plants. Scattered individuals of beavertail cactus and cholla cactus (*Cylindropuntia echinocarpa*) were also observed in some of the proposed planting areas. A partial list of the perennial plants observed at each of the proposed planting areas is included in Table 1.

Screening Assessment

Table 1 provides a matrix that summarizes the various assessment factors that PG&E is using for each of the proposed planting areas. In addition, it provides a rating for the six selected factors that were totaled to provide an overall score for each of the areas. It should be recognized that the preliminary screening based on the overall score provides a basis for comparison among the different units. With six different factors, there is a potential for certain limitations (for example, small unit size) to be offset by higher scores in other factors. Because of this, the overall score ratings have a relatively narrow range.

For the upland habitat revegetation areas, both UHR-1 and UHR-2 rank higher than UHR-3 (score of 14 versus score of 13), despite the fact that the coarse-textured substrate indicates that those planting areas will require more preparation to make them suitable for planting and irrigation.

For the riparian habitat revegetation areas, RHR-6 had the highest overall score. Important limitations for RHR-1 and RHR-2 include coarse-textured soils and the presence of biotic soils within the unit. RHR-1 is a previously undisturbed area.

For the historical floodplain revegetation areas, there was little variation in the overall ranking. The limitations related to HFR-4 were mainly due to small size, while HFR-6 was deemed to be of lower value due to visibility and access issues.

Mitigation Plantings

During the design phases of the remediation activities, efforts have been made to avoid impacts to natural vegetation and sensitive habitats. To the extent possible, work activities have been designed to use existing roadways and previously disturbed areas. As the final design for the remedial action is developed, efforts to minimize disturbance will continue to the extent possible. These efforts have made it possible to minimize the need for mitigation planting. Preconstruction surveys of work areas, staging areas, and access routes will identify species that could be adversely affected and determine which plants are to be salvaged or removed. All sensitive habitats in the immediate vicinity of the work areas or access routes that are not directly affected but could be indirectly affected by project activities will be identified and clearly marked with flagging, fencing, and/or signage prior to the start of construction.

According to the restoration plans (CH2M HILL, 2014a and 2014b), where plant impacts cannot be avoided, mitigation plantings will be required using a ratio of 6:1 replacement plants. The intent of this ratio is to account for potential mortality and still achieve the minimum 2:1 replacement ratio that is required in the Environmental Impact Report mitigation measure CUL-1a-5 (DTSC, 2011) without requiring subsequent planting. This same replacement ratio would be applied for all impacts to sensitive plants that cannot be avoided.

Mitigation plantings are anticipated to include various native trees and shrubs including blue palo verde, honey mesquite, catclaw acacia, Anderson's desert thorn, cattle saltbush, and big saltbush (*Atriplex lentiformis*). It is anticipated that most of the impacts to these species would occur in upland habitats, although in some cases (such as Bat Cave Wash) riparian plants could be affected. Because avoidance efforts will prioritize avoidance of large, mature vegetation that provides greater habitat value, it is anticipated that most vegetation impacts would occur to smaller trees (saplings and seedlings) and shrubs.

Based on the GIS intersection of mapped plants and the Final Groundwater Remedy 90% construction footprint and subsequent review of mapped vegetation data, Table 2 provides a summary of the expected number of plants and planting areas that will be needed. These plant impacts have been separated for the general impacts to plants within HNWR or riparian areas and ethnobotanically significant plants and those that are associated with mature plants within the key view from the Topock Maze B location out over the historical floodplain. The mitigation plants for the general plant impacts would be distributed among the proposed revegetation areas; however, the mature plant impacts on the historical floodplain would be mitigated by planting only within the historical floodplain.

Based on this GIS analysis summarized in Table 2, the estimated area needed for the plant impacts not associated with the historical floodplain is about 104,875 square feet (or 2.41 acres). The amount of plantable acreages in the upland habitat revegetation areas is estimated at 2.03 acres, and 1.12 acres in the riparian habitat revegetation areas. The estimated area needed for the mature plant impacts associated with the historical floodplain is about 102,450 square feet (or 2.35 acres). Almost all of those impacts are associated with removals of 27 salt cedar trees and 2 creosote bushes. The amount of plantable area in the historical floodplain revegetation areas is estimated at 3.99 acres.

All proposed historical floodplain revegetation units have been kept for consideration because of the potential difficulty of establishing honey mesquite and palo verde to offset the salt cedar removals. These plants currently exist on the historical floodplain but are primarily limited to areas where the sand deposits are apparently shallower. In order for the mitigation plantings to be sustainable, it will be necessary for

irrigation to be regulated in such a manner as to create a wetted connection from the root zone to the static groundwater table that can be as much as 15 to 25 feet below ground surface. The intent would be to use the irrigation water to entrain plant roots downward so that they are able to reach into the static groundwater table. It may also be possible to add fertilizer amendments (such as potassium) to the irrigation water to promote root growth.

Irrigation

The preferred method of irrigation for mitigation plantings would be the use of deep irrigation pipes (Bainbridge, 2006; Bainbridge et al., 2001). Deep pipe irrigation has been shown to produce much better survival rates and require less water than other irrigation methods (Bainbridge et al., 2001). The method for using deep irrigation is described in Bainbridge (2006). For each transplanted tree or shrub, a hole is drilled to a depth of 20 to 30 inches with a soil auger. A polyvinyl chloride pipe (2 inches in diameter and 20 inches long with a series of 1/16-inch holes drilled 2 to 3 inches down one side beginning 7 inches below the top) is inserted to the bottom of the hole such that the side with holes faces the seedling or shrub with about 4 inches protruding above the ground surface for easy filling. The pipe is situated about 3 to 4 inches from the seedling. Two or three pipes can be situated around the root ball for transplanting shrubs or small trees.

Water (1 quart) will be directly applied to seedlings once every week for the first 8 weeks. Then irrigation pipes will be filled with 2 quarts every other week for at least 3 months after the initial watering. Watering will be continued at least until the end of August each year and will be done for the first 2 years after planting. Water will be brought into the irrigation pipes according to a defined watering schedule using a truck-mounted tank equipped with a hose that can extend into the revegetation areas. The truck would be driven on the access road to a point adjacent to the revegetation units to permit the water to be distributed appropriately.

A gravity feed drip irrigation system is possible alternative for areas where it is determined that a large number of replacement trees and shrubs are needed. Under this method water would be supplied from an aboveground 1,500-gallon storage tank. The tank would be light brown in color and would measure approximately 8 feet in diameter by 5 feet tall. Although all of the proposed mitigation planting sites are located near existing roads or access routes to monitoring wells, the use of the above ground water tank will depend on the trade-off between accessibility to the tank by a water truck and the visual and aesthetic impacts of the tank.

Conclusions

Based on this GIS analysis summarized in Table 2, the estimated area needed for the plant impacts not associated with the historical floodplain is about 104,875 square feet (or 2.41 acres). The amount of plantable acreages in the upland habitat revegetation and in the riparian habitat revegetation areas is estimated at 2.03 acres and 1.12 acres, respectively.

The estimated area needed for the mature plant impacts associated with the historical floodplain is about 102,450 square feet (or 2.35 acres). The amount of plantable area in the historical floodplain revegetation areas is estimated at 3.99 acres. Almost all of the historical floodplain impacts are associated with potential removal of 27 salt cedar trees.

Based on the data provided in this technical memorandum, our recommendation is to use UHR-1 and UHR-2 for upland vegetation plantings. Preparation of the individual planting locations could be accomplished simply by screening out the rock material and supplementing with clean soil from onsite stockpiles that have been deemed suitable for re-use. Upland location UHR-3 would also be potentially suitable because the potential for chromium uptake from groundwater is likely to be negligible.

Among the riparian sites, RHR-3 through RHR-6 are the highest-ranking candidate locations. The remaining two locations, RHR-1 and RHR-2, would be good locations provided the presence of biotic soils is not considered as a limiting factor.

Because of the potential difficulty in establishing native trees such as honey mesquite and blue palo verde on the historical floodplain dredge sands, all proposed planting areas are kept for consideration. The intent is to focus mitigation plantings in areas where the sand deposits are thinnest and to provide an irrigation regime that favors deep root penetration. It is believed that survival success and sustainability of the mitigation plantings will require these plants to have roots that are able to reach the underlying static groundwater table.

References

Arcadis. 2013. *Technical Memorandum: The Potential for Chromium Uptake by Arrowweed and Potential Exposure Pathways*. January 28.

Bainbridge, D. 2006. "Deep Pipe Irrigation." *The Overstory* #175. Permanent Agricultural Resources, Holualoa, Hawaii.

Bainbridge, D. A., J. Tiszler, R. Macaller, and M. F. Allen. 2001. "Irrigation and Mulch Effects on Desert Shrub Transplant Establishment." *Native Plants Journal* 2: 25-29.

Brown, K. W, G. B. Evans, Jr. and B. D. Frentrup. 1983. *Hazardous Waste Land Treatment*. p. 253.

CH2M HILL. 2013. *Final Topock Groundwater Remediation Project, Mitigation and Monitoring Plan for Culturally Significant Plants*. March 13.

CH2M HILL. 2014a. *Final Topock Compressor Station Groundwater Remediation Project, Havasu National Wildlife Refuge, Habitat Restoration Plan. September*. Included as Appendix in the 90% Design C/RAWP.

CH2M HILL. 2014b. *Final Topock Compressor Station Groundwater Remediation Project, Habitat Restoration Plan for Riparian Vegetation and Other Sensitive Habitats*. September. Included as Appendix in the 90% Design C/RAWP.

CH2M HILL. 2014c. *Final Topock Compressor Station Groundwater Remediation Project, Aesthetics and Visual Resources Protection and Revegetation Plan. September*. Included as Appendix in the 90% Design C/RAWP.

Dave's Garden. 2014. Plant Files: Detailed Plant Information on Blue Palo Verde (*Parkinsonia florida*). Available online at: http://davesgarden.com/guides/pf/gp/97539. Accessed on December 9.

Department of Toxic Substances Control (DTSC). 2011. *Topock Compressor Station Final Remedy. FEIR, Vol. 1. Mitigation Monitoring and Reporting Program, California Department of Toxic Substances Control*.

GANDA and CH2M HILL. 2013. *Revised Final Topock Groundwater Remediation Project Floristic Survey Report*. December 30, 2013.

Natural Resource Conservation Service (NRCS). 2012. *Field Book for Describing and Sampling Soils*, Version 3.0. September.

Figures

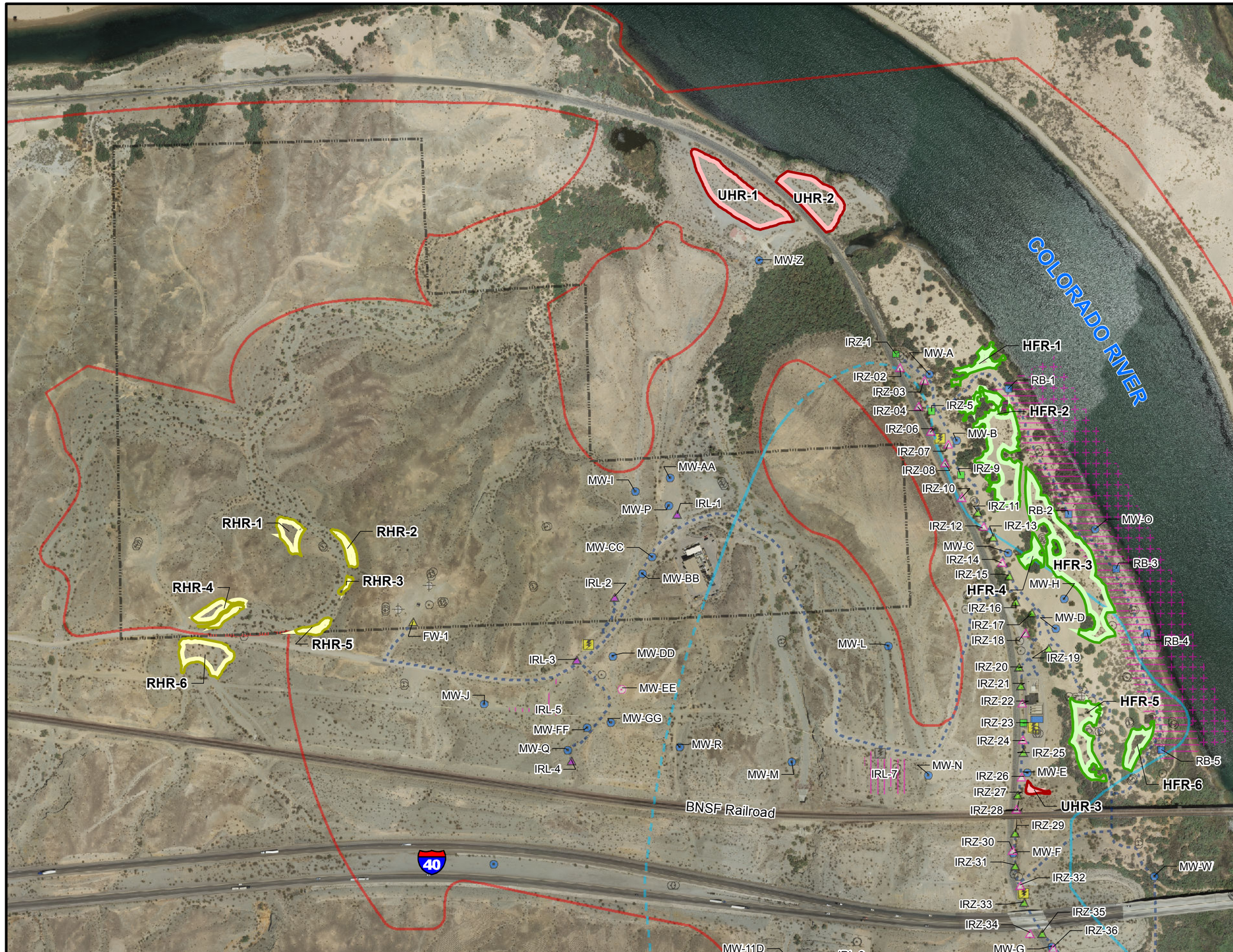

LEGEND

Proposed Revegetation Area

- Historical Floodplain Revegetation
- Riparian Habitat Revegetation
- Upland Habitat Revegetation
- Property Boundaries
- EIR Project Area

Existing Wells:

- Extraction Well
- Injection Well
- Monitoring Well

Provisional Wells:

(Items in Pink are Provisional)

- Injection Well
- Monitoring Well (MW-EE is a pending/future provisional monitoring well)
- Area for Potential Slant Well Screens
- Area for Inner Recirculation Loop (IRL) Wells
- Area for River Bank Extraction Wells

Planned Wells:

- Extraction, NTH IRZ
- Extraction, Riverbank
- Injection, Freshwater
- Injection, Inner Recirculation Loop
- Injection, NTH IRZ
- Injection, Topock Compressor Station
- Remedy Monitoring Well
- Recirculation Well
- Area for Monitoring Well MW-T

Pipeline Corridor for Remedy

- Underground Pipe/Conduit

Remedy Facilities

- Planned Transformer
- Future Provisional Transformer
- Proposed Remedy Structure
- Approximate extent of hexavalent chromium [Cr(VI)] concentrations exceeding 32 micrograms per liter (µg/L) at any depth ingroundwater based on fourth quarter 2013 sampling events. Dashed where based on limited data.

Note:

1. Note that in compliance with EIR mitigation measure CUL-1a-9, as well as PA and CHPMP mitigation measures, the pipeline along the dirt road west of National Trails Hwy is located in an existing, previously disturbed, access road. In addition, the location of the road and pipeline was field verified and does not create any direct physical impact or effect on the Topock Maze, as it is manifested archaeologically, in compliance with EIR mitigation measure CUL-1a-10, PA, and CHPMP mitigation measures.
2. All well and structure locations are approximate.

0 150 300 600
Feet

N

FIGURE 1
POTENTIAL REVEGETATION AND MITIGATION PLANTING AREAS

GROUNDWATER REMEDY BASIS OF DESIGN REPORT
PRE-FINAL (90%) DESIGN
PG&E TOPOCK COMPRESSOR STATION,
NEEDLES, CALIFORNIA

CH2MHILL

Path: \\Zinfandel\proj\PacificGasElectricCo\TopockProgram\GIS\MapFiles\2014\REVEG\FIG1_90pct_CAdetails_REVEG.mxd

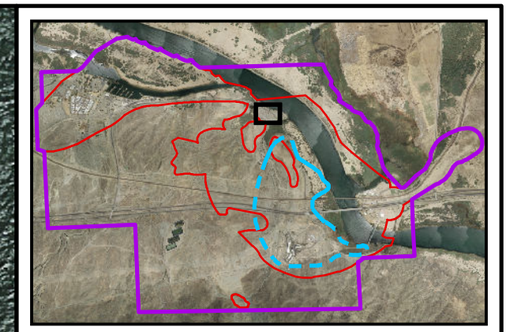

LEGEND

- Blue Palo Verde
- Honey Mesquite
- Staghorn Cholla

Proposed Revegetation Area

- Upland Habitat Revegetation
- CDFW Ephemeral Stream
- 100-ft. Buffer around Planting Area

- Area of Potential Effects (APE)
- EIR Project Area

- Approximate extent of hexavalent chromium [Cr(VI)] concentrations exceeding 32 micrograms per liter (µg/L) at any depth ingroundwater based on fourth quarter 2013 sampling events. Dashed where based on limited data.

0 30 60
Feet

N

FIGURE 2
PROPOSED REVEGETATION AREAS - UHR-1
GROUNDWATER REMEDY BASIS OF DESIGN REPORT
PRE-FINAL (90%) DESIGN
PG&E TOPOCK COMPRESSOR STATION,
NEEDLES, CALIFORNIA

CH2MHILL

Path: \\Zinfandel\proj\PacificGasElectricCo\TopockProgram\GIS\MapFiles\2014\REVEG\FIG2-16_90pct_CAdetails_REVEG_DDP.mxd

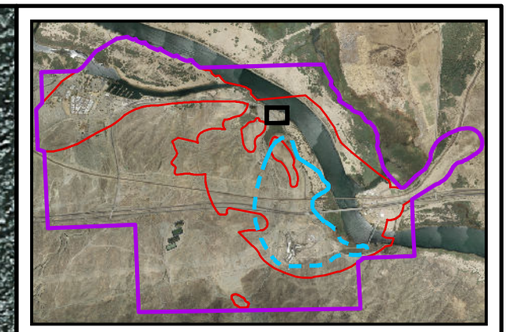

LEGEND

- Blue Palo Verde
- Honey Mesquite

Proposed Revegetation Area

- Upland Habitat Revegetation
- CDFW Ephemeral Stream
- 100-ft. Buffer around Planting Area
- Remedy Monitoring Well
- Area of Potential Effects (APE)
- EIR Project Area

Approximate extent of hexavalent chromium [Cr(VI)] concentrations exceeding 32 micrograms per liter (µg/L) at any depth ingroundwater based on fourth quarter 2013 sampling events. Dashed where based on limited data.

0 30 60
Feet

N

FIGURE 3
PROPOSED REVEGETATION AREAS - UHR-2
GROUNDWATER REMEDY BASIS OF DESIGN REPORT
PRE-FINAL (90%) DESIGN
PG&E TOPOCK COMPRESSOR STATION,
NEEDLES, CALIFORNIA

CH2MHILL

Path: \\Zinfandel\proj\PacificGasElectricCo\TopockProgram\GIS\MapFiles\2014\REVEG\FIG2-16_90pct_CAdetails_REVEG_DDP.mxd

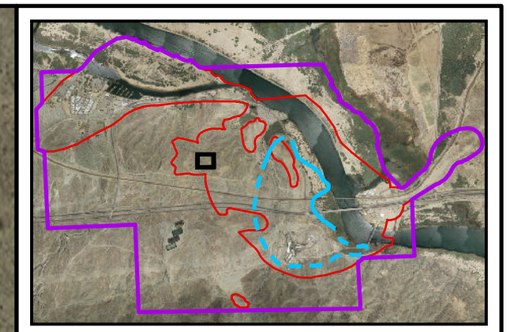

LEGEND

- Catclaw Acacia
- Silver Cholla

Proposed Revegetation Area

- Riparian Habitat Revegetation
- CDFW Ephemeral Stream
- 100-ft. Buffer around Planting Area

Existing Wells:

- Monitoring Well

- Area of Potential Effects (APE)
- EIR Project Area

Approximate extent of hexavalent chromium [Cr(VI)] concentrations exceeding 32 micrograms per liter (µg/L) at any depth ingroundwater based on fourth quarter 2013 sampling events. Dashed where based on limited data.

0 20 40
Feet

N

FIGURE 4
PROPOSED REVEGETATION AREAS - RHR-1
GROUNDWATER REMEDY BASIS OF DESIGN REPORT
PRE-FINAL (90%) DESIGN
PG&E TOPOCK COMPRESSOR STATION,
NEEDLES, CALIFORNIA

CH2MHILL

Path: \\Zinfandel\proj\PacificGasElectricCo\TopockProgram\GIS\MapFiles\2014\REVEG\FIG2-16_90pct_CAdetails_REVEG_DDP.mxd

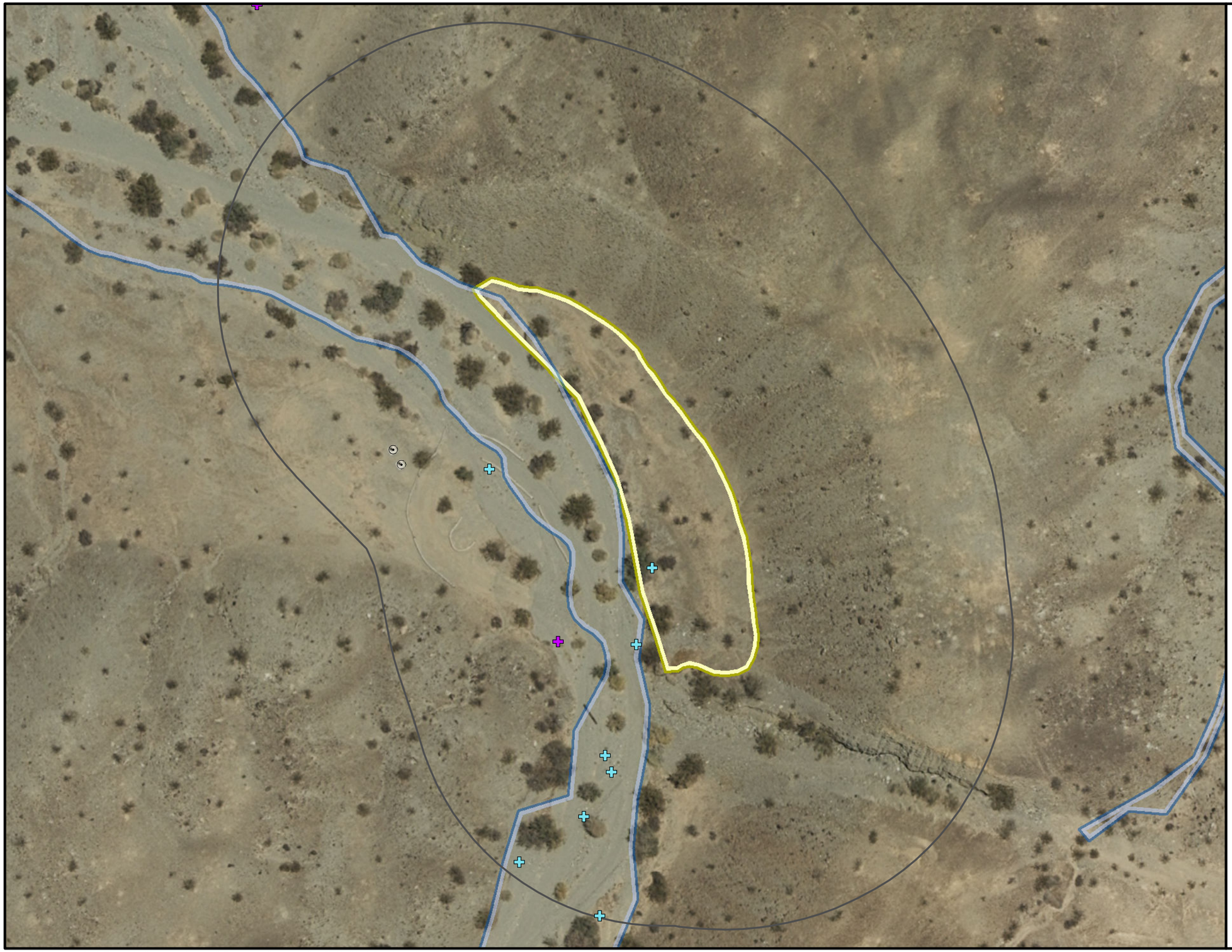

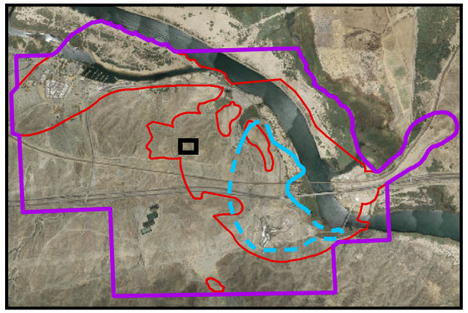

LEGEND

- Catclaw Acacia
- Silver Cholla

Proposed Revegetation Area

- Riparian Habitat Revegetation
- CDFW Ephemeral Stream
- 100-ft. Buffer around Planting Area

Existing Wells:

- Monitoring Well

- Area of Potential Effects (APE)
- EIR Project Area

Approximate extent of hexavalent chromium [Cr(VI)] concentrations exceeding 32 micrograms per liter (µg/L) at any depth ingroundwater based on fourth quarter 2013 sampling events. Dashed where based on limited data.

0 20 40
Feet

N

FIGURE 5
PROPOSED REVEGETATION AREAS - RHR-2
GROUNDWATER REMEDY BASIS OF DESIGN REPORT
PRE-FINAL (90%) DESIGN
PG&E TOPOCK COMPRESSOR STATION,
NEEDLES, CALIFORNIA

CH2MHILL

Path: \\Zinfandel\proj\PacificGasElectricCo\TopockProgram\GIS\MapFiles\2014\REVEG\FIG2-16_90pct_CAdetails_REVEG_DDP.mxd

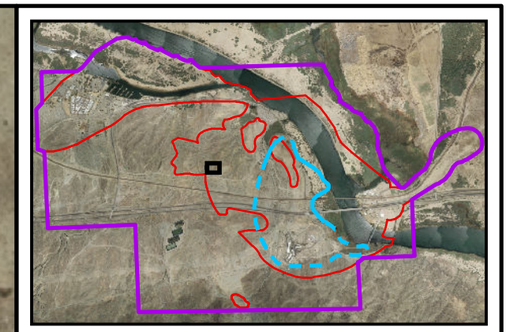

LEGEND

- Catclaw Acacia
- Silver Cholla

Proposed Revegetation Area

- Riparian Habitat Revegetation
- CDFW Ephemeral Stream
- 100-ft. Buffer around Planting Area

Existing Wells:

- Monitoring Well

- Area of Potential Effects (APE)
- EIR Project Area

Approximate extent of hexavalent chromium [Cr(VI)] concentrations exceeding 32 micrograms per liter (µg/L) at any depth ingroundwater based on fourth quarter 2013 sampling events. Dashed where based on limited data.

0 10 20
Feet

N

FIGURE 6
PROPOSED REVEGETATION AREAS - RHR-3
GROUNDWATER REMEDY BASIS OF DESIGN REPORT
PRE-FINAL (90%) DESIGN
PG&E TOPOCK COMPRESSOR STATION,
NEEDLES, CALIFORNIA

CH2MHILL

Path: \\Zinfandel\proj\PacificGasElectricCo\TopockProgram\GIS\MapFiles\2014\REVEG\FIG2-16_90pct_CAdetails_REVEG_DDP.mxd

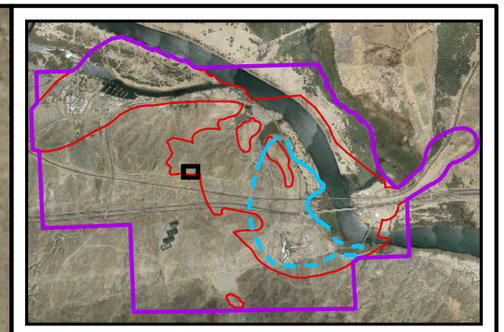

LEGEND

- Blue Palo Verde
- Catclaw Acacia
- White Rhatany

Proposed Revegetation Area

- Riparian Habitat Revegetation
- Active Flow Channel
- CDFW Ephemeral Stream
- 100-ft. Buffer around Planting Area

Existing Wells:

- Monitoring Well

- Area of Potential Effects (APE)
- EIR Project Area

Approximate extent of hexavalent chromium [Cr(VI)] concentrations exceeding 32 micrograms per liter (µg/L) at any depth ingroundwater based on fourth quarter 2013 sampling events. Dashed where based on limited data.

0 20 40
Feet

N

FIGURE 7
PROPOSED REVEGETATION AREAS - RHR-4
GROUNDWATER REMEDY BASIS OF DESIGN REPORT
PRE-FINAL (90%) DESIGN
PG&E TOPOCK COMPRESSOR STATION,
NEEDLES, CALIFORNIA

CH2MHILL

Path: \\Zinfandel\proj\PacificGasElectricCo\TopockProgram\GIS\MapFiles\2014\REVEG\FIG2-16_90pct_CAdetails_REVEG_DDP.mxd

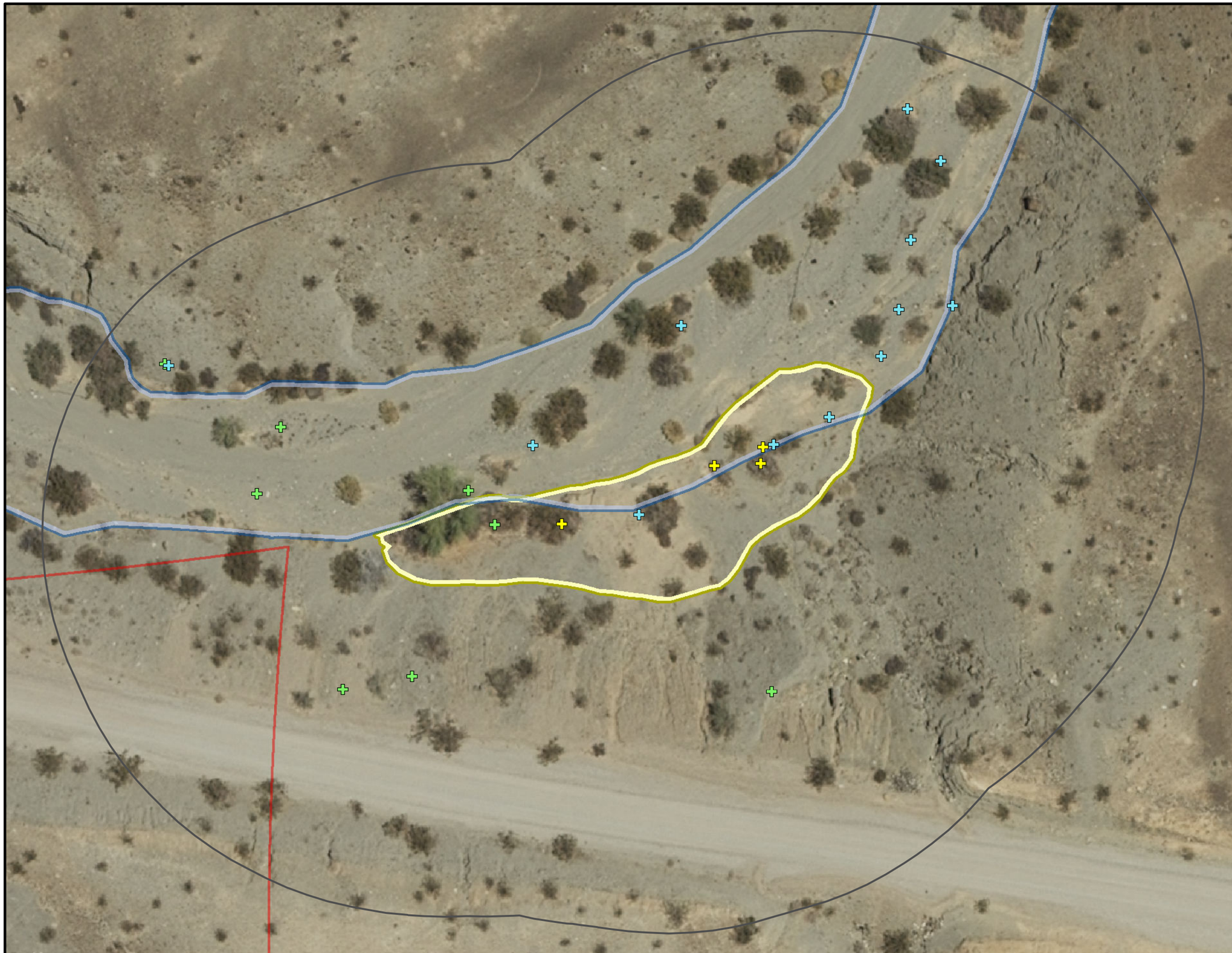

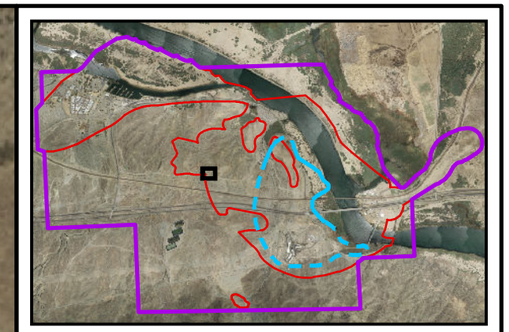

LEGEND

- Andersons Desert Thorn
- Blue Palo Verde
- Catclaw Acacia

Proposed Revegetation Area

- Riparian Habitat Revegetation
- CDFW Ephemeral Stream
- 100-ft. Buffer around Planting Area

- Area of Potential Effects (APE)
- EIR Project Area

Approximate extent of hexavalent chromium [Cr(VI)] concentrations exceeding 32 micrograms per liter (µg/L) at any depth ingroundwater based on fourth quarter 2013 sampling events. Dashed where based on limited data.

0 10 20
Feet

N

FIGURE 8
PROPOSED REVEGETATION AREAS - RHR-5

GROUNDWATER REMEDY BASIS OF DESIGN REPORT
PRE-FINAL (90%) DESIGN
PG&E TOPOCK COMPRESSOR STATION,
NEEDLES, CALIFORNIA

CH2MHILL

Path: \\Zinfandel\proj\PacificGasElectricCo\TopockProgram\GIS\MapFiles\2014\REVEG\FIG2-16_90pct_CAdetails_REVEG_DDP.mxd

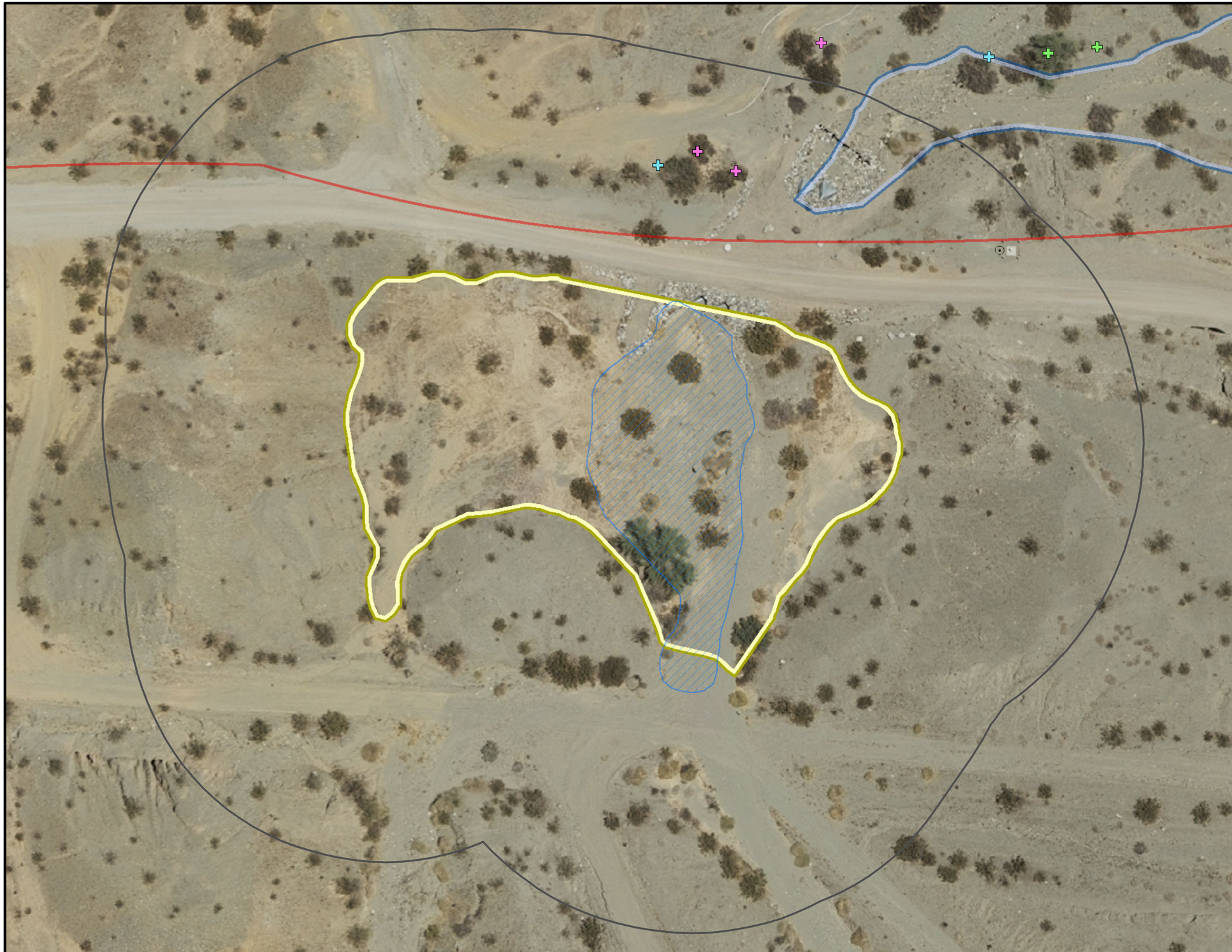

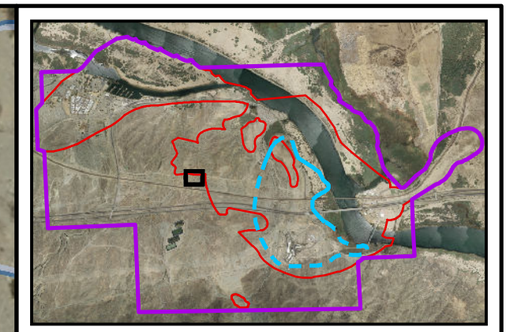

LEGEND

- Blue Palo Verde
- Catclaw Acacia
- White Rhatany

Proposed Revegetation Area

- Riparian Habitat Revegetation
- Active Flow Channel
- CDFW Ephemeral Stream
- 100-ft. Buffer around Planting Area

Existing Wells:

- Monitoring Well

- Area of Potential Effects (APE)
- EIR Project Area

Approximate extent of hexavalent chromium [Cr(VI)] concentrations exceeding 32 micrograms per liter (µg/L) at any depth ingroundwater based on fourth quarter 2013 sampling events. Dashed where based on limited data.

0 25 50
Feet

N

FIGURE 9
PROPOSED REVEGETATION AREAS - RHR-6

GROUNDWATER REMEDY BASIS OF DESIGN REPORT
PRE-FINAL (90%) DESIGN
PG&E TOPOCK COMPRESSOR STATION,
NEEDLES, CALIFORNIA

CH2MHILL

Path: \\Zinfandel\proj\PacificGasElectricCo\TopockProgram\GIS\MapFiles\2014\REVEG\FIG2-16_90pct_CAdetails_REVEG_DDP.mxd

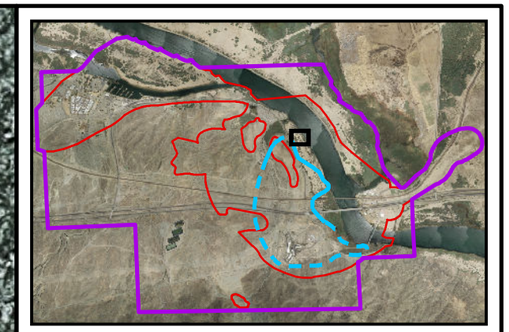

LEGEND

Proposed Revegetation Area

- Historical Floodplain Revegetation
- 100-ft. Buffer around Planting Area

Provisional Wells:

- Injection Well
- Area for River Bank Extraction Wells (RB-6 to RB-9)

Planned Wells:

- Extraction, National Trails Highway (NTH) In-situ Reactive Zone (IRZ)
- Extraction, Riverbank
- Injection, NTH IRZ
- Remedy Monitoring Well

Pipeline Corridor for Remedy

- Underground Pipe/Conduit
- Area of Potential Effects (APE)
- EIR Project Area

Approximate extent of hexavalent chromium [Cr(VI)] concentrations exceeding 32 micrograms per liter (µg/L) at any depth ingroundwater based on fourth quarter 2013 sampling events. Dashed where based on limited data.

0 25 50
Feet

N

FIGURE 10
PROPOSED REVEGETATION AREAS - HFR-1
GROUNDWATER REMEDY BASIS OF DESIGN REPORT
PRE-FINAL (90%) DESIGN
PG&E TOPOCK COMPRESSOR STATION,
NEEDLES, CALIFORNIA

CH2MHILL

Path: \\Zinfandel\proj\PacificGasElectricCo\TopockProgram\GIS\MapFiles\2014\REVEG\FIG2-16_90pct_CAdetails_REVEG_DDP.mxd

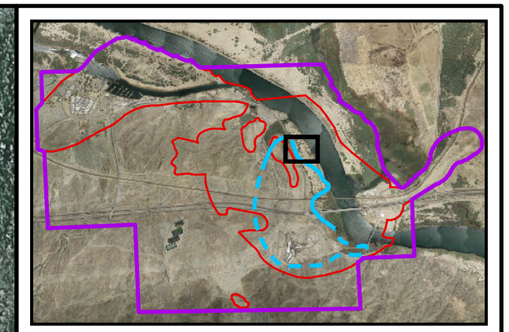

LEGEND

Creosote Bush

Proposed Revegetation Area

Historical Floodplain Revegetation

100-ft. Buffer around Planting Area

Provisional Wells:

Injection Well

Area for River Bank Extraction Wells (RB-6 to RB-9)

Existing Wells:

Monitoring Well

Planned Wells:

Extraction, National Trails Highway (NTH) In-situ Reactive Zone (IRZ)

Extraction, Riverbank

Injection, NTH IRZ

Remedy Monitoring Well

Transformers

Planned Transformer

Pipeline Corridor for Remedy

Underground Pipe/Conduit

Area of Potential Effects (APE)

EIR Project Area

Approximate extent of hexavalent chromium [Cr(VI)] concentrations exceeding 32 micrograms per liter (µg/L) at any depth ingroundwater based on fourth quarter 2013 sampling events. Dashed where based on limited data.

0 40 80

Feet

N

FIGURE 11
PROPOSED REVEGETATION AREAS - HFR-2

GROUNDWATER REMEDY BASIS OF DESIGN REPORT
PRE-FINAL (90%) DESIGN
PG&E TOPOCK COMPRESSOR STATION,
NEEDLES, CALIFORNIA

CH2MHILL

Path: \\Zinfandel\proj\PacificGasElectricCo\TopockProgram\GIS\MapFiles\2014\REVEG\FIG2-16_90pct_CAdetails_REVEG_DDP.mxd

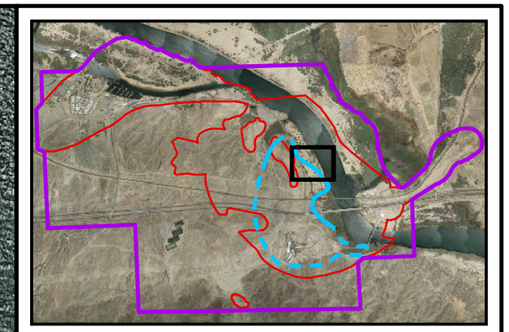

LEGEND

- Creosote Bush
- Honey Mesquite

Proposed Revegetation Area

- Historical Floodplain Revegetation
- 100-ft. Buffer around Planting Area

Provisional Wells:

- Injection Well
- Area for River Bank Extraction Wells (RB-6 to RB-9)

Existing Wells:

- Monitoring Well

Planned Wells:

- Extraction, National Trails Highway (NTH) In-situ Reactive Zone (IRZ)
- Extraction, Riverbank
- Injection, NTH IRZ
- Remedy Monitoring Well

Transformers

- Planned Transformer

Pipeline Corridor for Remedy

- Underground Pipe/Conduit
- Area of Potential Effects (APE)
- EIR Project Area

Approximate extent of hexavalent chromium [Cr(VI)] concentrations exceeding 32 micrograms per liter (µg/L) at any depth ingroundwater based on fourth quarter 2013 sampling events. Dashed where based on limited data.

0 60 120
Feet

N

FIGURE 12
PROPOSED REVEGETATION AREAS - HFR-3

GROUNDWATER REMEDY BASIS OF DESIGN REPORT
PRE-FINAL (90%) DESIGN
PG&E TOPOCK COMPRESSOR STATION,
NEEDLES, CALIFORNIA

CH2MHILL

Path: \\Zinfandel\proj\PacificGasElectricCo\TopockProgram\GIS\MapFiles\2014\REVEG\FIG2-16_90pct_CAdetails_REVEG_DDP.mxd

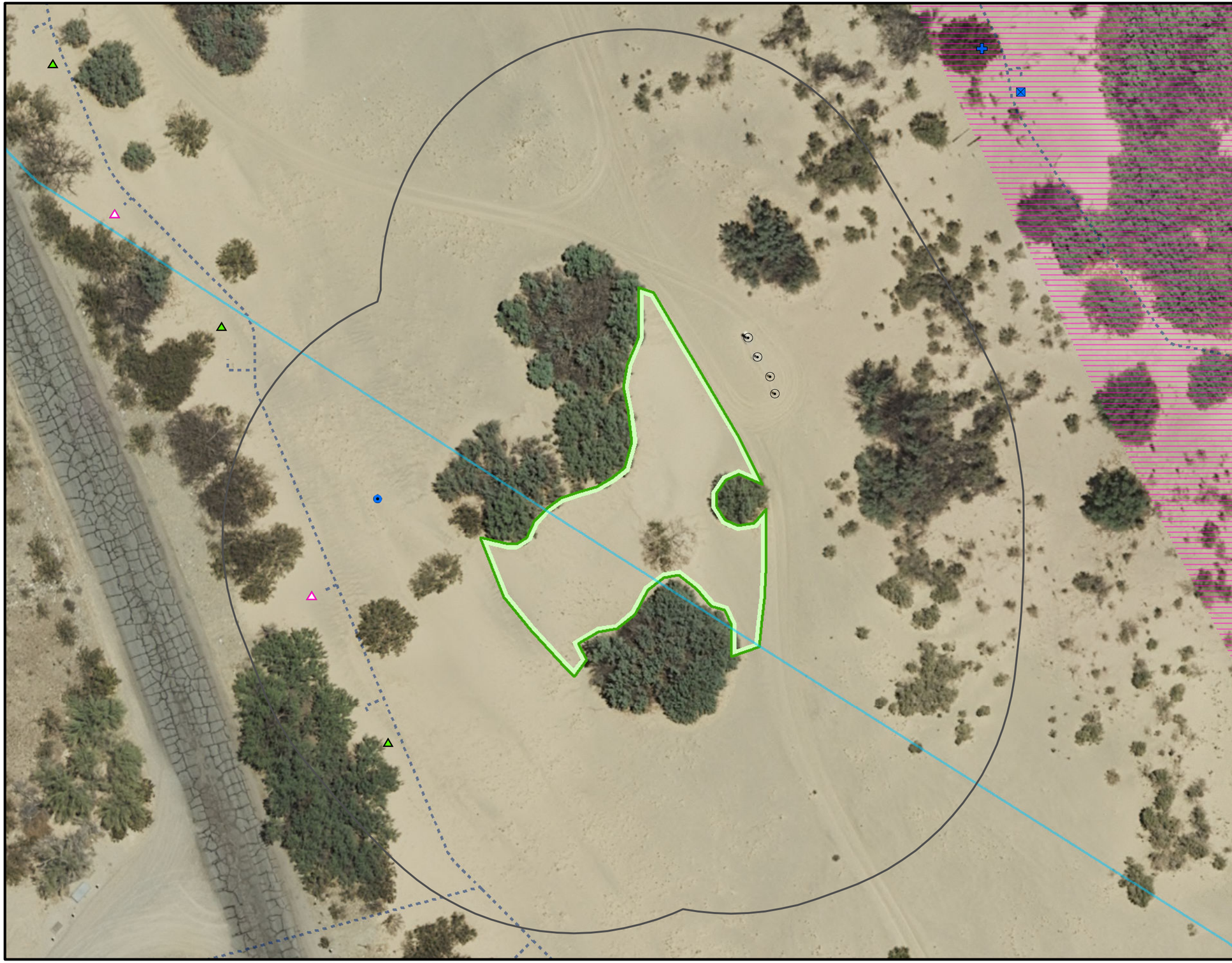

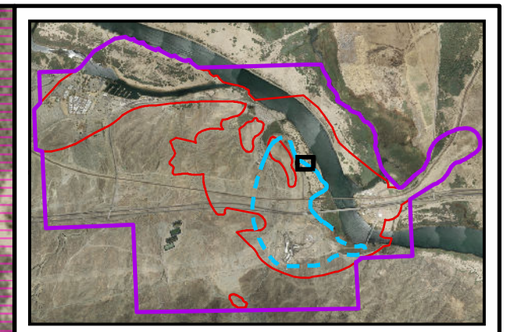

LEGEND

Creosote Bush

Proposed Revegetation Area

Historical Floodplain Revegetation

100-ft. Buffer around Planting Area

Provisional Wells:

Injection Well

Area for River Bank Extraction Wells (RB-6 to RB-9)

Existing Wells:

Monitoring Well

Planned Wells:

Extraction, Riverbank

Injection, NTH IRZ

Remedy Monitoring Well

Pipeline Corridor for Remedy

Underground Pipe/Conduit

Area of Potential Effects (APE)

EIR Project Area

Approximate extent of hexavalent chromium [Cr(VI)] concentrations exceeding 32 micrograms per liter (µg/L) at any depth ingroundwater based on fourth quarter 2013 sampling events. Dashed where based on limited data.

0 20 40

Feet

N

FIGURE 13
PROPOSED REVEGETATION AREAS - HFR-4

GROUNDWATER REMEDY BASIS OF DESIGN REPORT
PRE-FINAL (90%) DESIGN
PG&E TOPOCK COMPRESSOR STATION,
NEEDLES, CALIFORNIA

CH2MHILL

Path: \\Zinfandel\proj\PacificGasElectricCo\TopockProgram\GIS\MapFiles\2014\REVEG\FIG2-16_90pct_CAdetails_REVEG_DDP.mxd

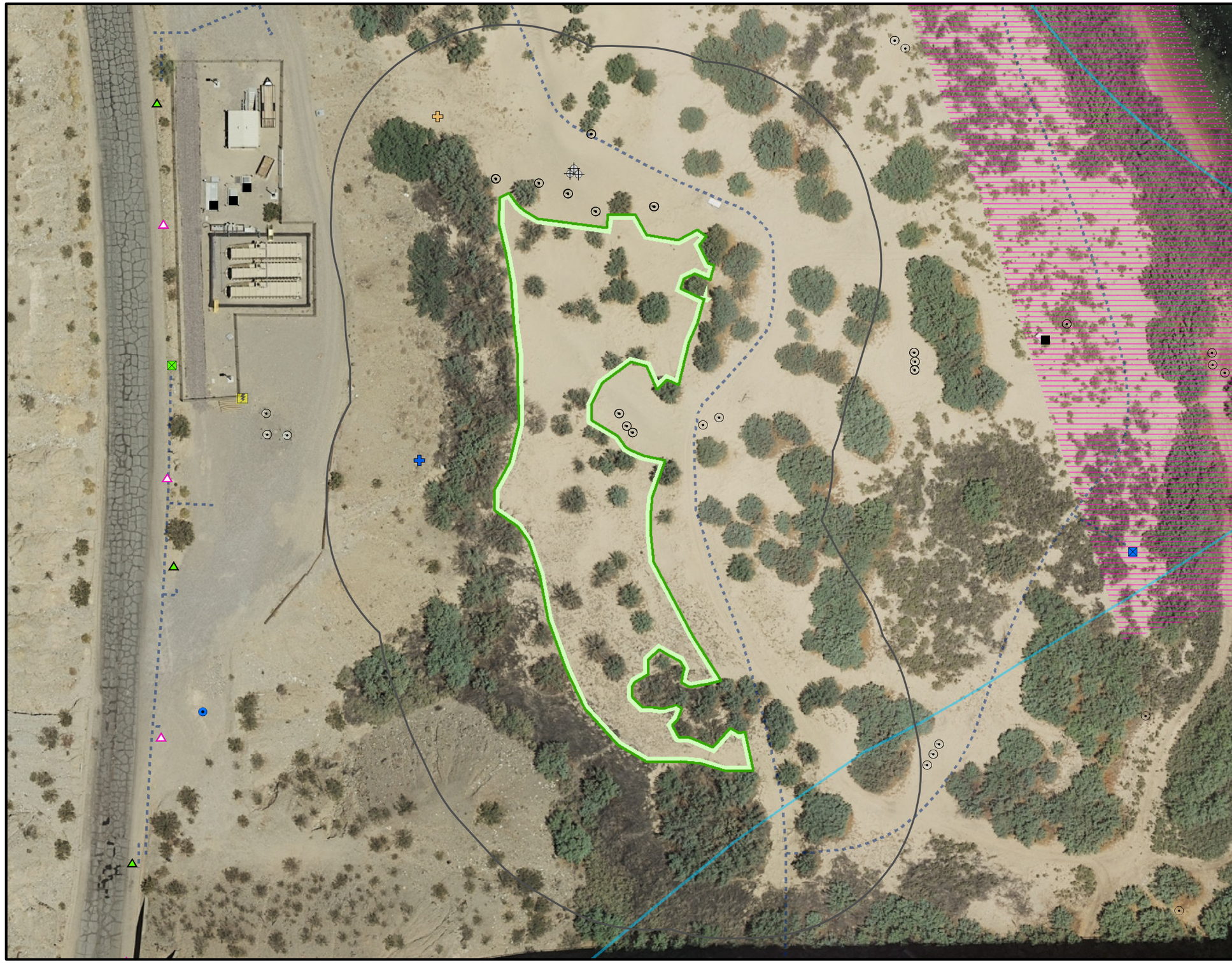

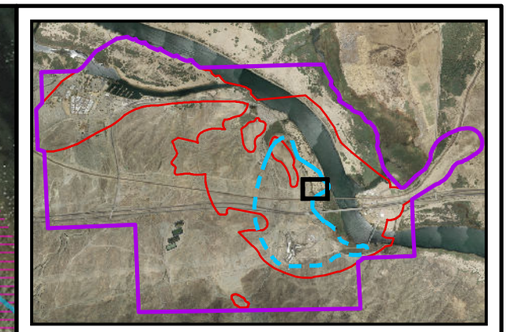

LEGEND

- Creosote Bush
- Honey Mesquite

Proposed Revegetation Area

- Historical Floodplain Revegetation
- 100-ft. Buffer around Planting Area

Provisional Wells:

- Injection Well
- Area for River Bank Extraction Wells (RB-6 to RB-9)

Existing Wells:

- Extraction Well
- Injection Well
- Monitoring Well

Planned Wells:

- Extraction, National Trails Highway (NTH) In-situ Reactive Zone (IRZ)
- Extraction, Riverbank
- Injection, NTH IRZ
- Remedy Monitoring Well

Transformers

- Planned Transformer

Pipeline Corridor for Remedy

- Underground Pipe/Conduit
- Area of Potential Effects (APE)
- EIR Project Area

Approximate extent of hexavalent chromium [Cr(VI)] concentrations exceeding 32 micrograms per liter (µg/L) at any depth ingroundwater based on fourth quarter 2013 sampling events. Dashed where based on limited data.

0 30 60
Feet

N

FIGURE 14
PROPOSED REVEGETATION AREAS - HFR-5

GROUNDWATER REMEDY BASIS OF DESIGN REPORT
PRE-FINAL (90%) DESIGN
PG&E TOPOCK COMPRESSOR STATION,
NEEDLES, CALIFORNIA

CH2MHILL

Path: \\Zinfandel\proj\PacificGasElectricCo\TopockProgram\GIS\MapFiles\2014\REVEG\FIG2-16_90pct_CAdetails_REVEG_DDP.mxd

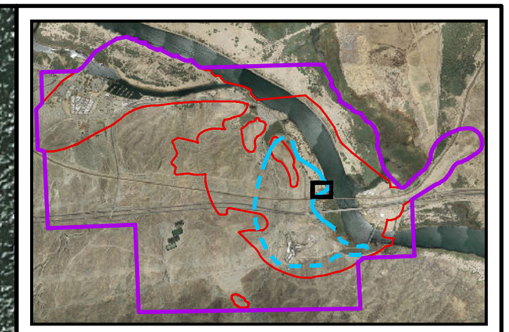

LEGEND

Proposed Revegetation Area

- Historical Floodplain Revegetation
- 100-ft. Buffer around Planting Area
- Area for River Bank Extraction Wells (RB-6 to RB-9)

Existing Wells:

- Extraction Well
- Injection Well
- Monitoring Well

Planned Wells:

- Extraction, Riverbank

Pipeline Corridor for Remedy

- Underground Pipe/Conduit
- Area of Potential Effects (APE)
- EIR Project Area

Approximate extent of hexavalent chromium [Cr(VI)] concentrations exceeding 32 micrograms per liter (µg/L) at any depth ingroundwater based on fourth quarter 2013 sampling events. Dashed where based on limited data.

0 25 50
Feet

N

FIGURE 15
PROPOSED REVEGETATION AREAS - HFR-6

GROUNDWATER REMEDY BASIS OF DESIGN REPORT
PRE-FINAL (90%) DESIGN
PG&E TOPOCK COMPRESSOR STATION,
NEEDLES, CALIFORNIA

CH2MHILL

Path: \\Zinfandel\proj\PacificGasElectricCo\TopockProgram\GIS\MapFiles\2014\REVEG\FIG2-16_90pct_CAdetails_REVEG_DDP.mxd

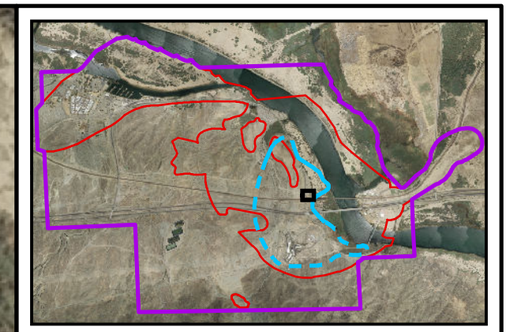

LEGEND

Proposed Revegetation Area

Upland Habitat Revegetation

100-ft. Buffer around Planting Area

Provisional Wells:

Injection Well

Planned Wells:

Injection, NTH IRZ

Remedy Monitoring Well

Pipeline Corridor for Remedy

Underground Pipe/Conduit

Area of Potential Effects (APE)

EIR Project Area

Approximate extent of hexavalent chromium [Cr(VI)] concentrations exceeding 32 micrograms per liter (µg/L) at any depth ingroundwater based on fourth quarter 2013 sampling events. Dashed where based on limited data.

0 10 20

Feet

N

FIGURE 16
PROPOSED REVEGETATION AREAS - UHR-3

GROUNDWATER REMEDY BASIS OF DESIGN REPORT
PRE-FINAL (90%) DESIGN
PG&E TOPOCK COMPRESSOR STATION,
NEEDLES, CALIFORNIA

CH2MHILL

Path: \\Zinfandel\proj\PacificGasElectricCo\TopockProgram\GIS\MapFiles\2014\REVEG\FIG2-16_90pct_CAdetails_REVEG_DDP.mxd

Tables

TABLE 1

Matrix of Factors Considered for Ranking Revegetation Sites

Preliminary Assessment of Proposed Mitigation Planting Areas for Final Groundwater Remedy Impacts, Topock Compressor Station, California

Revegetation Area	Description	Habitat Type	Size (ac.)	Size Factor	Ownership	Surface Soil Texture	Soil Factor	Biotic Soils?	BioSoil Factor	Site Preparation Needs?	Previous Disturbance?	Disturbance Factor	Wildlife Use	Dominant Plants	Estimated Height (ft)	Sub-dominant Plants	Estimated Percent Cover	Accessibility	Accessibility Factor	Visibility	Visibility Factor	Nearby Infrastructure	Cultural Issues?	Rank (Sum of shaded factors)
UHR-1	Former levelled campground area to west of NTH	Upland	1.277	3	BLM	coarse sandy gravel and cobble	1	No	3	High, sieve soils or import	All, graded/ terraced	3	wild burrow scat	LATR	2 to 5	PAFL; few cactii: OPBA & CYEC	3	Easy, on existing unpaved roadway from adjacent NTH	3	From NTH and Colorado River (site is above). Unlikely to be visible from Maze (site is below ridge line)	1	Former Campground/ Roadhouse building slabs	Possible data collection need for trash behind old concrete slabs	14
UHR-2	Levelled and filled area to east of NTH	Upland	0.822	3	BLM	coarse sandy gravel and cobble	1	No	3	High, sieve soils or import	All, fill piles & ORV use	3	None observed	LATR	1 to 6	PAFL (up to 13 ft); few OPBA	5	Easy, on existing unpaved roadway from adjacent NTH	3	From NTH (site is below) and Colorado River. Possibly visible from nearby portion of Maze.	1	Underground phone line along NTH	No	14
RHR-1	Margin of wash to west of wells at end of access route within western drainage	Riparian	0.257	2	FMIT	gravelly coarse to medium sand	2	Yes, central portion	1	Moderate	None	1	wild burrow scat; small mammal burrows on west edge	LATR	3 to 5	SEGR (SW); HYEM (NW); few cactii	2	Moderate, end of existing well access roadway	1	Not visible except from adjacent mesas	3	Just outside of 100 ft from well cluster	No	10
RHR-2	Margin of wash to east of wells at end of access route within western drainage	Riparian	0.147	1	FMIT	fine sand with increasing gravel near slope base and along wash channel	3	Yes, limited patches along northern channel margin	2	Low	96%	2	wild burrow scat & small mammal burrows	LATR	3 to 9	SEGR	5	Moderate, near end of existing well access roadway	1	Not visible except from adjacent mesas	3	Within 70 ft of well cluster but can be easily avoided	No	12
RHR-3	Portion of the wash and margin of the western drainage	Riparian	0.042	1	FMIT	predominantly medium to fine sand with very gravelly coarse to medium sand within wash	3	No	3	Low	67%	2	wild burrow scat	LATR and LYCO	3 to 8	SEGR	25	Moderate, along existing unpaved roadway from former Route 66	1	Visible from adjacent mesa and from old Route 66.	3	Unpaved access route	No	13
RHR-4	Margin of western drainage just north of unpaved roadway that was former Route 66. Bisected by exising access route.	Riparian	0.298	2	FMIT	extremely gravelly coarse to fine sand with pockets of very fine sandy loam and silt (mostly as pedestals beneath LATR)	2	No	3	Moderate	46%	2	wild burro scat	LATR	3 to 9	SEGR	15	Easy, adjacent to former Route 66	2	From adjacent former Route 66	2	Former Route 66 and unpaved access route	No	13
RHR-5	Portion of wash and margin of western drainage just north of unpaved roadway that was former Route 66	Riparian	0.115	1	BLM/FMIT	extremely gravelly coarse to fine sand	2	No	3	Moderate	All	3	None observed	LATR and LYCO	4 to 6	Large PAFL (~23 ft); SEGR	15	Moderate, along existing unpaved roadway from former Route 66	1	Visible from adjacent former Route 66 but not readily	3	Unpaved access route	No	13
RHR-6	Portion of wash and margin of western drainage just south of unpaved roadway that was former Route 66	Riparian	0.559	2	BLM	silt and fine sand with bands of very gravelly coarse sand	3	No	3	Low	All	3	None observed	LATR	3 to 8	PAFL (< 7 ft)	20	Easy, adjacent to former Route 66	2	From adjacent former Route 66	2	Underground pipe line along south side of Old Route 66	No	15
HFR-1	Northern outside margin of construction footprint for pipeline loop	Historical floodplain	0.231	2	BLM	fine to medium sand (dredge sand) of variable depths	3	No	3	Low	All	3	None observed	TARA	3 to 9	PLSE	2	Moderate, will use access roadway along future pipeline route	2	Visible from NTH and adjacent mesas	1	Future underground pipe line ring and wells	No	14
HFR-2	Northern inside portion of construction footprint for pipeline loop	Historical floodplain	1.279	3	BLM	fine to medium sand (dredge sand from Colorado River)	3	No	3	Low	All	3	None observed	TARA and PLSE	3 to 6	None	2	Moderate, will use access roadway along future pipeline route	1	Visible from NTH and adjacent mesas	1	Future underground pipe line ring and wells	No	14
HFR-3	Central east inside portion of construction footprint for pipeline loop	Historical floodplain	1.815	3	BLM	fine to medium sand (dredge sand from Colorado River)	3	No	3	Low	All	3	None observed	TARA and PLSE	3 to 8	None	10	Moderate, will use access roadway along future pipeline route	1	Visible from NTH and adjacent mesas	1	Future underground pipe line ring and wells	No	14
HFR-4	Central west inside portion of construction footprint for pipeline loop	Historical floodplain	0.164	1	BLM	fine to medium sand (dredge sand from Colorado River)	3	No	3	Low	All	3	None observed	PLSE	~ 4	None	5	Moderate, will use access roadway along future pipeline route	2	Visible from NTH and adjacent mesas	1	Future underground pipe line ring and wells	No	13
HFR-5	Southwestern outside margin of construction footprint for pipeline loop	Historical floodplain	0.596	2	BLM	fine to medium sand (dredge sand from Colorado River)	3	No	3	Low	All	3	None observed	TARA	2 to 7	PLSE	5	Moderate, will use access roadway along future pipeline route	2	Visible from NTH and adjacent mesas	1	Future underground pipe line ring and wells	No	14
HFR-6	Southeastern inside portion of construction footprint for pipeline loop	Historical floodplain	0.286	2	BLM	fine to medium sand (dredge sand from Colorado River)	3	No	3	Low	All	3	None observed	PLSE	~ 4	TARA	2	Moderate, will use access roadway along future pipeline route	1	Visible from NTH and adjacent mesas	1	Future underground pipe line ring and wells	No	13
UHR-3	Filled and levelled area to northeast of intersection of NTH and the AT&SF Railroad Bridge	Upland	0.050	1	AT&SF RAILROAD/ BLM	extremely gravelly coarse to fine sand	2	No	3	Moderate	All	3	None observed	LATR	~ 2	None	1	Easy, from adjacent NTH	3	Visible from NTH and adjacent mesas	1	Future pipeline along NTH	No	13

NOTES:

UHR = Upland Habitat Revegetation Area; **RHR** = Riparian Habitat Revegetation Area; **HFR** = Historical Floodplain Revegetation Area

Land Ownership

BLM = Bureau of Land Management; FMIT - Fort Mohave Indian Tribes; AT&SF = Atchison Topeka and Santa Fe Railroad; NTH = National Trails Highway

Surface soil texture based on field observation. No soil pits were dug and no digital soil mapping information was availableon NRCS site for CA portion of the project area.

Site preparation needs: Presence of large proportion gravel and cobble = High; presence of lesser amounts of gravel = moderate; presence of adequate fine materials = low. This was not used as a separate factor since it parallels the soil factor.

Plant Names: LATR: Larrea tridentata; LYCO: Lycium cooperi; PAFL: Parkinsonia florida: SEGR: Senegalia greggi; HYEM: Hyptis emoryi; OPBA: Opuntia basilaris; CYEC: Cylindropuntia echinocarpa; PLSE: Pluchea sericea

Estimated percent cover developed by comparing aerial photograph to visual graphics for estimating percent cover (in Field Book for Describing and Smapling Soils ver. 3.0, NRCS Sept 2012). It may be possible to adjust total acreage for plantable acreage by reducing the exiting coverage amount.

FACTOR Scaling:

Size: 0 to 0.2 acre = 1; 0.21 to 0.8 acre = 2; >0.8 = 3

Soil Factor: Presence of large proportion gravel and cobble = 1; presence of lesser amounts of gravel = 2; presence of adequate fine materials = 3

BioSoil Factor: biotic soils over large portion of unit = 1; biotic soils present but avoidable = 2; no biotic soils = 3

Disturbance factor: Not previously disturbed = 1; portion not previously disturbed = 2; all previously disturbed = 3

Accessibility Factor: site accessed by longer unpaved access route = 1; site accessed from adjacent unpaved route = 2; site easily accessed from adjacent paved roadway = 3.

Visibility Factor: easily viewed from roadway open to public = 1; viewable from old Route 66 = 2; only viewable from adjacent mesa summits = 3

TABLE 2

Summary of Expected Plant Impacts and Revegetation Areas Needed

Preliminary Assessment of Proposed Mitigation Planting Areas for Final Groundwater Remedy Impacts, Topock Compressor Station, California

Scientific Name	Common Name	Number of Plants Impacted	Visual	Ethnobotanical	HNWR	Riparian	Mitigation	Trees/shrubs for Planting	Spacing (ft.)	Area per plant (sq.ft.)	Area for all plants (sq.ft.)
Trees, shrubs, and cactii not located on the Historical Floodplain where dredge sands were deposited											
Atriplex polycarpa	Cattle salt bush	7	NA	7	NA	NA	6:1[a]	42	5	25	1,050
Lycium andersonii	Anderson's desert thorn	7	NA	7	2	5	6:1	42	10	100	4,200
Opuntia basilaris var. *basilaris*	Beavertail cactus	29	NA	NA	10	NA	1:1	29	5	25	725
Parkinsonia florida (seedlings/saplings)	Blue Palo Verde	31	NA	31	NA	3	1:1[b]	62	25	625	38,750
Parkinsonia florida	Blue Palo Verde	8	1	8	NA	3	6:1	48	25	625	30,000
Prosopis pubescens	Honey mesquite	3	NA	3	NA	1	6:1	18	25	625	11,250
Prosopis pubescens (seedlings/sapling)	Honey Mesquite	3	NA	3	2	NA	1:1[b]	6	25	625	3,750
Psorothamnus spinosus	Desert smoke tree	1	NA	NA	NA	1	6:1	6	25	625	3,750
Senegalli greggii	Catclaw acacia	19	NA	NA	17	15	6:1	114	10	100	11,400
										Subtotal Area	104,875
Trees and shrubs located on the Historical Floodplain where dredge sands were deposited											
Tamarix ramossissima	Saltcedar	27	27	NA	NA	NA	6:1	162	25	625	101,250
Larrea tridentata	Creosote bush	2	2	NA	NA	NA	6:1	12	10	100	1,200
										Subtotal area	102,450
										Total area	207,325

NOTES:

NA = Not Applicable

[a] This ratio assumes a 3:1 mitigation ratio that is doubled to account for potential mortality that can be as high as 50 percent over the 5 year monitoring period.

[b] This ratio assumes that impacted seedlings/saplings will be relocated to designated planting areas and one additional mitigation tree will be planted.

Attachment
Representative Planting Site Photographs

Photo A-1. UHR-1: View southeast showing levelled areas of former campground.

Photo A-2. UHR-1: View southwest from National Trails Highway showing terracing.

Photo A-3. UHR-2: View southeast showing existing access and soil pile to left.

Photo A-4. UHR-2: View northwest showing access route and soil pile.

Photo A-5. RHR-1: View southeast showing nearby well cluster in background.

Photo A-6. RHR-1: View northwest from the well cluster area.

Photo A-7. RHR-2: View south-southeast showing wash and margin.

Photo A-8. RHR-2: View north-northwest showing wash and RHR-1 area beyond the well cluster.

Photo A-9. RHR-3: View north-northeast showing wash and margin. Old roadway into wash from southern mesa can be at northern end of this unit.

Photo A-10. RHR-3: View south-southwest showing old Route 66 in background.

Photo A-11. RHR-4: View east showing access route that bisects the site.

Photo A-12. RHR-4: View west showing old Route 66 in background.

Photo A-13. RHR-5: View east showing slight slope at based of old Route 66 to right.

Photo A-14. RHR-5: View west showing old Route 66 access where vehicle is located.

Photo A-15. RHR-6: View southeast showing rip rap near wash and ORV tracks.

Photo A-16. RHR-6: View southwest showing rip rap near wash and culvert.

Photo A-17. UHR-3: View east-southeast showing adjacent BNSF bridge.

Photo A-18. UHR-3: View west showing adjacent National Trails Highway and buried pipeline alignment.

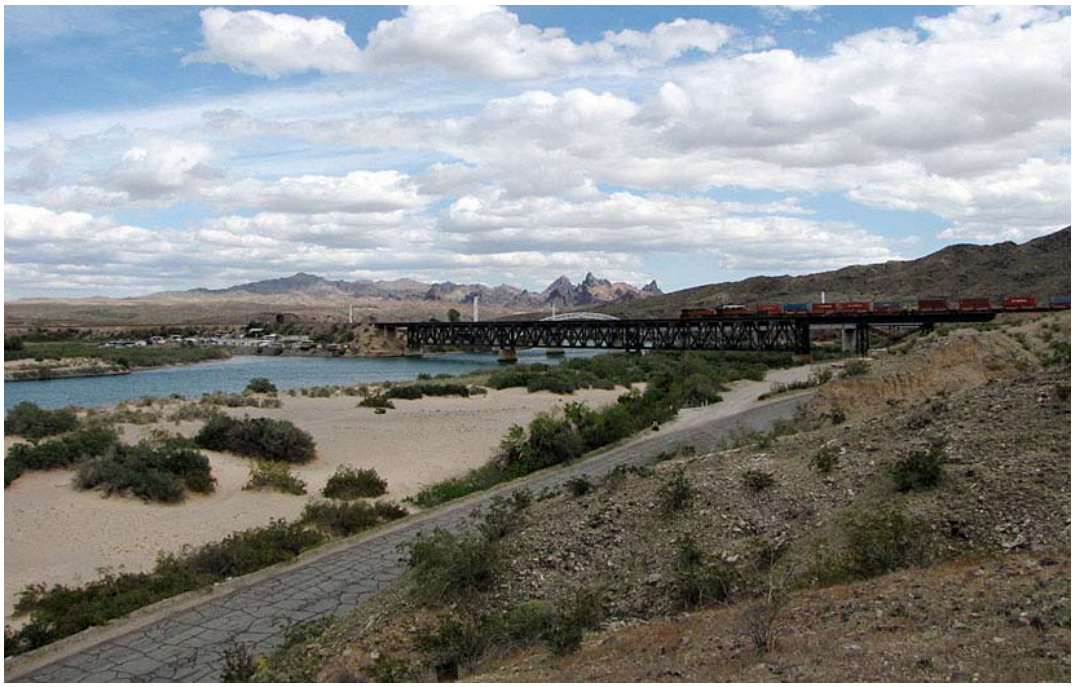

Photo A-19. Key View 5 from EIR—View southeast from Topock Maze Locus B over the historical floodplain toward the Colorado River, BNSF railroad bridge and the "Needles." HFR-4 and southern portion of HFR-3 to left and HFR-5 and -6 out of sight and nearer bridge to right.

Photo A-20. Key View 11 from EIR—View west toward the historical floodplain, IM-3, and compressor station. Portions of HFR-1, -2, and -3 are located just out of sight on the elevated sand deposits beyond the line of large tamarisks.

Photo A-21. View north-northeast across southern portion of historical floodplain in direction of southern portion of HFR-3.

Photo A-22. View north-northwest across northern portion of historical floodplain to the west of southern portion of HFR-2 showing variable depth of dredge sands.

Photo A-23. View north-northeast across eastern portion of historical floodplain showing mixed arrow weed and tamarisk.

Photo A-24. View north across eastern portion of historical floodplain showing variable depth of dredge sands.

C/RAWP Appendix W
Technical Memorandum: Proposed Use of Certain Areas for Construction, Staging, and Soil Storage at PG&E Topock Compressor Station

Proposed Use of Certain Areas for Construction, Staging, and Soil Storage at PG&E Topock Compressor Station

PREPARED FOR: Topock File

PREPARED BY: CH2M HILL on behalf of PG&E

DATE: January 26, 2015

Pacific Gas and Electric Company (PG&E) is implementing the selected groundwater remedy for chromium in groundwater at the PG&E Topock Compressor Station (TCS, or the Compressor Station) in San Bernardino County, California. This technical memorandum (TM) was prepared in response to the California Department of Toxic Substances Control (DTSC) and the U.S. Department of the Interior (DOI) direction to PG&E dated December 23, 2014 to (1) further examine and consider the Tribal input provided in the tables attached to the directive letter, (2) provide clarification on the construction/staging/soil storage terminology used in the Construction/Remedial Action Work Plan (C/RAWP; CH2M HILL 2014a), and (3) provide detailed descriptions of the proposed use of the areas still in discussion with the Tribes as well as justification for the necessity of using these areas during construction and remedy implementation.

Section 1 of this TM addresses the construction/staging/soil storage terminology used in the C/RAWP. The attachments to the Agencies' December 23, 2014 letter (DOI and DTSC 2014a) identified eleven areas (Areas 6, 7, 11, 12, 13, 15, 16, 17, 19, 20, and 25) whose use for project activities is still being discussed with the Tribes. These areas are depicted on Figure 4.3-2 (attached to this TM) of the C/RAWP. Of these eleven areas, seven (Areas 6, 7, 12, 13, 16, 17, and 19) are in the Upland area of the site and are discussed in Section 3. The remaining four Non-Upland areas (Areas 11, 15, 20, and 25) are addressed in Section 2.

1.0 Construction/Staging/Soil Storage Terminology

Sections 4.2.2 and 4.2.3 of the C/RAWP present the following definitions and descriptions:

- **Primary Work Zones (also called Construction Areas) –** These zones are defined as the immediate area where actual construction will occur for a given component of remedy infrastructure. For example, the primary work zone for the construction of a well will consist of a defined area around the well location, while the zone for the construction of a pipeline will consist of an area on one or both sides along the length of the pipeline. To the extent feasible, primary work zones will be limited to previously disturbed areas (that is, minimizing use of undisturbed areas and those potentially exposed to differential compaction).
- **Support Zones (also called Staging Areas) –** Most of the staging areas will be located adjacent to or near primary work zones to support construction. Staging areas are existing open areas (that is, minimizing use of undisturbed areas and those potentially exposed to differential compaction) that are used to minimize the size of the primary work zones by centrally placing temporary facilities (such as portable toilets and break areas), and for laydown of construction equipment, materials, supplies, and tools. Displaced soil, material (e.g., asphalt), and water generated in the primary work zones might also be temporarily staged in staging areas en route to the designed storage or disposition area so that the size of the primary work zones can be minimized. Staging areas will also be used to coordinate transportation activities—for example, a staging area for the management of wastewater generated during well construction and development on the floodplain will be set up at the centrally located MW-20 Bench. This central wastewater management area will include a series of portable frac tanks for temporary storage of wastewater, a truck haul station for hauling of wastewater, and pumping facilities

to pump the wastewater to the IM-3 treatment plant, as appropriate, thereby limiting the need for these activities in the primary work zones on the flood plain.

- **Soil staging/processing area (Area 5 on C/RAWP Figure 4.3-2)** – This area is located in Moabi Regional Park, and is where soil and material displaced during construction activities will be brought for staging, processing and potential reuse at the project site. Imported material for use in construction may also be temporarily staged here.
- **Soil container storage area (Area 4 on C/RAWP Figure 4.3-2)** – This area is located in Moabi Regional Park, and will serve as the primary storage and management area for containerized soil displaced from the site during construction that is pending final disposition in accordance with the Soil Management Plan (Volume 4 of the Operation and Maintenance [O&M] Manual, which is Appendix L of the Basis of Design Report/Pre-Final (90%) Design Submittal for the Final Groundwater Remedy [90% BOD; CH2M HILL 2014b]).

2.0 Description and Proposed Use of the Four Non-Upland Areas Still Being Discussed with the Tribes

This section describes and discusses the proposed use of the four non-Upland areas (Areas 11, 15, 20, and 25) still being discussed with the Tribes. These areas are depicted in the attached C/RAWP Figure 4.3-2.

Area 11 – Based on Tribal inputs provided in the tables attached to the Agencies' December 23, 2014 directive letter and received during resolution of the 60% design comments, PG&E has limited the area to be used during remedy construction to the western side of the fenced area, as shown in C/RAWP Figure 4.3-2. With the exception of installing a natural gas pipe from PG&E Line 300B to supply natural gas to the new generators, construction activities will be inside the ponds fenced area. It is anticipated that ongoing O&M activities at the ponds will continue to occur during remedy construction. After remedy construction is complete, the entire fenced area will continue to be used for O&M of the ponds (as is currently done) and O&M of the additional pond improvement features.

Regarding the Tribes' comment about tortoise habitat and tortoise activity in the pond area, PG&E asked for further clarification from the Tribes during the Technical Work Group (TWG) meeting on December 10, 2014. PG&E conducted multiple protocol-level tortoise surveys from 2004 to 2010 and identified tortoise remains in the project limits. In consultation with U.S. Fish and Wildlife Services (USFWS), the entire upland area of the project was deemed habitat for desert tortoise which resulted in concurrence from USFWS on avoidance and minimization measures that were proposed in the 2007 Programmatic Biological Assessment (PBA; CH2M HILL 2007) and most recently the 2014 Final Groundwater Remedy PBA (CH2M HILL 2014c). Measures within the PBA to protect desert tortoises that could potentially occur within the project limits and Groundwater Remedy Environmental Impact Report (DTSC 2011) Mitigation Measure BIO-2b will be implemented prior to and during construction of the remedy (e.g., preconstruction tortoise surveys and biological monitoring during construction to avoid impacts to this species).

Area 15 – In compliance with the Agencies' direction in its April 4, 2014 letter (DOI and DTSC 2014b), PG&E did not propose using this area for staging during remedy construction, as noted in Footnote 3 of C/RAWP Figure 4.3-2. Since there is no proposed remedy infrastructure in this area, PG&E also did not propose using the area as a primary work zone. The potential use for this area is for planting native plants to mitigate potential impacts to plants that may occur during remedy construction in the Upland (see Section 5.4 of the C/RAWP). Whether this area will ultimately be used for mitigation planting will depend on the actual plant impacts that may occur during construction and the associated requirements for mitigation plantings. Appendix V of this Supplemental 90% submittal contains additional details regarding the rationale and planned use of this area.

Area 20 – PG&E did not propose to use this area during remedy construction. This area is currently used to access the existing wells on the MW-24 Bench for well monitoring and maintenance. This area is also an

Area of Concern (AOC), No. 27, in the current soil remedial investigation effort. It is important to note that if it is later determined that the future provisional well IRL-6 needs to be installed, this area will need to be used as a primary work zone to install the well and associated vaults/piping/conduits, and after installation is completed, to access the well and associated equipment during remedy O&M. Access would be needed for ongoing monitoring and O&M of the existing wells at the MW-24 bench to occur during construction of the provisional well IRL-6. After construction of IRL-6 is complete, this area would continue to be used for access and O&M of remedy infrastructure in this area.

Area 25 – This flat area is where construction vehicles and water trucks will obtain construction water for use during remedy construction (see Drawing C-07-200 in Appendix D2 of the 90% BOD [CH2M HILL 2014b]). This area was selected because of its central location relative to all construction areas, its close proximity to the existing pipe that supplies fresh water to the Compressor Station, its relatively flat surface (requires no grading), and its convenient access off the paved National Trails Highway. While construction water is also available offsite such as from Needles or Golden Shores, each such round trip would be over 20 miles, which would add to the already expected busy traffic on National Trails Highway during construction along with the associated potential traffic-related safety hazards (e.g., vehicle accidents) and environmental impacts (e.g., dust, noise, greenhouse gas [GHG] emissions). It is anticipated that limited staging of construction materials/equipment and temporary parking of construction-related vehicles will also occur in this central area. After remedy construction is complete, this area will be restored to its pre-construction condition.

Regarding the Tribes' comment on a direct impact to a historic site, based on PG&E's preliminary discussions with the U.S. Bureau of Land Management and the California State Historic Preservation Office, the location of this area is adjacent to a non-significant segment of Route 66, and therefore use of that area during construction will not cause an adverse effect/significant impact to the road (Mead & Hunt, 2013).

However, the Route 66 sign located adjacent to Area 25 is significant and its protection as a historic property/historical resource during construction is addressed in the Cultural and Historical Property Treatment Plan (Hanes and Price 2014). The sign is considered a key component of the Route 66 interpretation program outlined in the Treatment Plan. Any potential direct impacts to the sign will be avoided and, if deemed necessary, the sign will be protected with barriers during construction. New interpretive signage may be added to the area around the existing sign as part of Treatment Plan implementation. The Treatment Plan also specifies that PG&E will develop a restoration plan for the sign, subject to the approval of the relevant landowner. The proposed use of the area adjacent to the Route 66 sign is temporary in duration and therefore will not permanently diminish the integrity of the sign's setting. With avoidance of direct physical impacts to the sign, as well as the temporary nature of the use of the area adjacent to the sign, project activities would not meet the criteria for adverse effects to historic Route 66.

3.0 Description and Proposed Use of the Seven Upland Areas Still Being Discussed with Tribes

This section describes and discusses the proposed use of the seven areas in the Upland (Areas 6, 7, 12, 13, 16, 17, and 19; see attached C/RAWP Figure 4.3-2) still being discussed with the Tribes.

3.1 Current Approach: Remedy Construction

The Upland portion of the Topock site is a uniquely challenging area to conduct construction-related activities given the environmental site conditions (e.g., topography); the limited acceptable access routes (jointly used with other utilities); the number of sensitive biological, cultural, and archaeological resources located in this area; as well as Tribes' preference for no additional disturbance outside of the present-day existing roadway (see Attachment G to Appendix I of the September 2014 90% BOD). These factors constrain the total area available for construction-related activities.

Therefore, in the C/RAWP, PG&E has proposed an approach to construction that allows for the safe and efficient installation of all remedial facilities, as well as the subsequent decommissioning of IM-3, while

protecting the surrounding sensitive resources, minimizing the overall construction footprint and use of undisturbed areas to the extent practicable, and minimizing the overall environmental impacts associated with the work activities. Central to this approach is locating support areas for staging of construction-related equipment and materials in close proximity to where the actual construction activities will occur. Further details on this approach are provided below.

Installation of Pipelines A and H in the Upland will require over 20,000 feet of piping and over 14,000 feet of electrical conduit, in addition to pipeline trench backfill materials, concrete trench boxes, and environmental/storm water protection materials, and related required construction materials. Due to the lack of overall work area in the Upland area (e.g., Pipeline A installation work located in the narrow access road), construction work in the Upland area will be very space-constrained. In order to minimize impacts, primary work zones will be restricted to a minimized area around the specific construction activity taking place at any one time. There will not be space available within primary work zones to stage equipment or materials, including those materials that will very quickly be consumed during construction (e.g., pipeline).

For example, the designed width of Pipeline A (approximately 8’-8” wide) will itself use much of the width of the access road and shoulder. Construction equipment will be operating adjacent to the trench edge, and at both ends of the trench within the primary work zone. Given the space constraints of the road, using additional area around the immediate trenching zone to temporarily store materials would obstruct the active construction equipment and associated traffic to and from the active primary work zone, and would obstruct any traffic attempting to bypass the work zone. This requires the extension of the primary work zone to key areas adjacent to the road. Establishing the primary work zone in this way will allow for effective transfer of equipment and materials and will minimize the dust and noise generated from frequent transfer trips by shortening the travel distance. Nearby supporting staging areas are necessary to maintain an adequate short-term supply of construction materials to be able to maintain an effective and safe (to workers and monitors/site visitors) operation at primary work zones.

Further, the construction of remedial facilities within the road, including the Bat Cave Wash crossing and wells MW-BB, MW-CC, and IRL-3, will already significantly impact the road, requiring intermittent traffic shutdowns. Use of the nearby **Areas 6 and 7** for staging will allow the project to minimize service interruptions to the access road.

In addition, most of **Area 6** will be used as primary work zones during the construction of wells IRL-1, MW-P, and MW-AA and the associated vaults, piping, and instrumentation (see Exhibit 1). During this period of well construction, **Area 7** will be used as a key support zone. As described in Section 3.2 of the C/RAWP, a significant amount of equipment and materials is needed to perform this work (e.g., drill rig, service vehicles, support equipment, bins/tanks, and crew facilities). Because of their central locations in the Upland, **Areas 6 and 7** are also proposed for the location of temporary facilities for the duration of construction of remedy infrastructure in the Upland area. These temporary facilities would include, but not be limited to, a trailer to serve as a central communication and coordination area for the crews working in the Upland in emergency situations, restroom facilities, safety and security lighting, a central equipment storage area, and a central parking area. The presence of these temporary facilities will also provide a safer working environment, as health and safety and first aid materials, as well as reliable means of communication (e.g., land line telephone, internet), would be available at these locations. After remedy construction is complete, **Area 6** will continue to be used for monitoring and O&M of installed remediation and monitoring wells and associated vaults/piping/conduits. **Area 7** will continue to be used for monitoring and O&M of the existing well cluster MW-41.

Similar to Area 6, most of **Area 12** will be used as the primary work zone and staging area for laydown of construction equipment, materials, supplies, and tools, as well temporary placement of displaced soils during the construction of remediation well FW-1 and associated vaults/piping/conduits. Note that ongoing O&M activities at the IM-3 injection well field will continue to occur during construction of FW-1, and close coordination with IM-3 operation staff will ensure that these concurrent activities will proceed in harmony.

After remedy construction is complete, **Area 12** will continue to be used for monitoring and O&M of the IM-3 injection wells until they are decommissioned as part of the decommissioning and removal of IM-3, as well as for O&M of the new well FW-1 and associated vaults/piping/conduits and of the existing monitoring wells located in this area.

Area 13 will be used as a staging area for laydown of construction equipment, materials, supplies, and tools, as well temporary placement of displaced soils during remedy construction. It will also serve as a critical vehicle turnaround area to allow for efficient construction and eliminate the need for construction vehicles and heavy equipment to travel a big loop along the unpaved road west of IM-3, along Park Moabi Road, and then again along National Trails Highway. After remedy construction is complete, **Area 13** will continue to be used for monitoring and O&M of the existing CW-01 well cluster.

Finally, as noted in footnote 3 of C/RAWP Figure 4.3-2, **Areas 16, 17, and 19** are not proposed to be used for staging during remedy construction. They will be needed as primary work zones during construction of Pipeline A for the same reasons as stated above. **Area 19** will also be used as a primary work zone for construction of monitoring well MW-N. After remedy construction is complete, these areas will continue to be used to support the O&M of the remedy infrastructure, including wells, along this narrow corridor. **Areas 17 and 19** will continue with their current use as a turn around and/or parking areas for vehicle traffic along the access road.

Summary

The proposed use of the Upland areas, which are in close proximity to the remedial infrastructure in the Upland, is required for efficient, successful and safe implementation of construction activities as they will result in the following benefits:

- Providing the minimum number of practical locations to temporarily stage the required quantity of equipment and materials necessary to safely construct Pipelines A and H, the Upland monitoring and remediation wells, Bat Cave Wash crossing, and supporting infrastructure.
- Increasing worker safety (e.g., reduces onsite construction traffic, vehicle congestion at primary work zones, and the overall mileage required to complete the work).
- Increasing public safety and reducing nuisance to the public by decreasing the density of construction vehicle traffic on public roads (e.g., between Moabi Regional Park and the staging areas in the Upland), and reducing both the trip frequency and trip duration for construction vehicles (typically have relatively poor visibility) traveling between primary work zones and distant staging areas.
- Reducing environmental impacts associated with execution of the work, including dust, noise, and GHG emissions.
- Reducing the total construction schedule by allowing for the most efficient construction approach.

In general, increasing the distance between an active primary work zone and its supporting staging area has several adverse impacts. Travel time increases significantly due to the greater distance between these locations, especially given the generally slow rate of travel of construction vehicles. To adequately supply a primary work zone from distant staging areas also requires use of either more frequent or larger, higher-capacity support vehicles to deliver required construction materials. Primary work zones then become more congested due to either the larger quantity of smaller vehicles or having larger vehicles unloading their materials at the already tightly-constrained primary work zones. The support vehicles will thus be more likely to become backed up at the primary work zone, impacting traffic at and near the work area and potentially traffic on nearby public roads (such as National Trails Highway). Congestion in primary work zones will also result in increased safety hazards associated with construction vehicles, which typically have relatively poor visibility, in close proximity to equipment and construction personnel. Increased traffic will increase dust, noise, and GHG emissions.

3.2 Current Approach: Decommissioning and Removal of IM-3

The IM-3 Decommissioning Work Plan (Appendix F of the C/RAWP) proposes the use of **Areas 6 and 7** as staging areas during the decommissioning and removal of IM-3 (see attached Figure 3-1 from the IM-3 Decommissioning Work Plan).

The proposed use of the centrally-located (relative to the primary work zone) staging **Areas 6 and 7** allows for the most efficient decommissioning and removal of the IM-3 system (specifically the IM-3 treatment plant); it minimizes the total vehicle and heavy equipment mileage required to complete the work (increasing worker and public safety), reduces the total GHG emissions, minimizes the total footprint of the project, and minimizes the dust and noise associated with execution of the work. Decommissioning of the treatment plant will require adequate space for demolition equipment around the perimeter of the plant to safely allow for removal of structures, thus requiring staging areas for the stockpiling of material, service vehicles, support equipment, bins/tanks, and crew facilities. PG&E shares the Tribes' and Agencies' goal of removing IM-3 at the earliest practical date, consistent with the requirements of the Settlement Agreement (DTSC 2012); using the nearby proposed staging areas best allows the project to meet this shared goal.

3.3 Evaluation of Alternative Approaches to Staging Areas

PG&E has conducted an evaluation of alternatives to the current approach and the associated impacts of those alternatives. The impacts evaluated include safety, environmental (e.g., traffic, GHG emissions, noise, dust, water for dust control), and construction schedule duration. Each alternative assumes that the Upland Areas 6, 7, 12, and 13 are not available for staging, and therefore incorporates the use of other staging areas to use instead. Tables 1 and 2 compare the current work approach to the alternative approaches identified below for remedy construction and IM-3 decommissioning and removal, respectively.

3.3.1 Evaluation of Alternative Approaches: Remedy Construction

The evaluation identified four alternative options for remedy construction staging areas, as described below and summarized in Table 1.

Option 1 – Use of Staging Areas At/Near the MW-20 Bench

Option 1 uses the staging areas located at or near the MW-20 Bench (14 and 18 in Figure 4.3-2) in lieu of staging Areas 6, 7, 12, and 13. These areas were not originally intended for such use when working in the Upland because they are planned for the competing, simultaneous use to support construction of the National Trails Highway In-situ Reactive Zone (NTH IRZ) and the remedial facilities on the MW-20 Bench, given their proximity to these areas. The NTH IRZ itself requires over 47,000 feet of piping and over 28,000 feet of electrical conduit, in addition to trench backfill materials, concrete trenches and utility vaults, mechanical and process equipment, electrical hardware, and environmental/storm water protection materials. Since these areas are already limited in size for their intended use, they are not large enough to simultaneously support additional work in the Upland. In addition, as access to staging areas 14 and 18 is directly from the National Trails Highway, any increase in traffic density in and out of these areas also directly increases traffic density and potential nuisance and traffic hazards to the public traveling on National Trails Highway. Key considerations associated with this approach include:

- Worker Safety – This approach will lead to over-crowding in staging areas 14 and 18, which are critical to support the construction of the wells and pipelines associated with the NTH IRZ and the remedial facilities on the MW-20 Bench. For example, staging area 18 will be used as a central staging area for the management of water generated during well construction and testing, which will require the majority of available square footage. In addition, the frequency of trips by construction vehicles and heavy equipment, travel duration, and the size of support vehicles will increase (MW-20 Bench is approximately 0.5 mile from staging areas 6 and 7), increasing the likelihood for vehicle-related accidents to occur.

- Public Safety and Nuisance – This approach increases the risk to public safety, and increases nuisance to the public by increasing the density of construction vehicle traffic on public roads, increasing both the trip frequency and trip duration for construction vehicles traveling between primary work zones and staging areas 14/18, and increasing congestion on National Trails Highway, as larger construction vehicles are required to slowly enter and exit staging areas 14 and 18 at a greater frequency and for a greater duration over the remedy construction project.
- Environmental Impacts – The total GHG emissions associated with the project will increase due to the additional vehicle and heavy equipment traffic. The increased traffic along the unpaved IM-3 access road and National Trails Highway will increase the potential for dust generation, require the usage of more water/vehicle trips to suppress the dust, and generate more noise.
- Construction Schedule Duration – As mentioned above, this approach will lead to over-crowding within the utilized staging areas and limit the number of parallel construction activities that can safely be conducted. This will result in an extended and less efficient construction schedule, ultimately delaying the project goal of completing the groundwater remedy construction project and the decommissioning and removal of IM-3 at the earliest practical date.

Option 2 – Use of Staging Areas at Moabi Regional Park

Option 2 uses one or more of the areas located at Moabi Regional Park (staging areas 3, 4, and 5 in Figure 4.3-2). These areas could be used in lieu of staging areas 6, 7, 12, and 13, but were not originally intended for temporary facilities or as a support zone for construction in the Upland because they were not adjacent or central to the primary work zone in the Upland. Area 3 is already designated to serve as the Construction Headquarters (CHQ) and main temporary equipment and material laydown area. This area is meant to serve as the initial delivery or “check-in” area for materials or equipment, after which these materials are transferred to localized staging areas. This area was sized assuming that adequate staging areas are available near primary work zones. Using this area as a direct support zone for work in the Upland area will both impact work in the Upland area and reduce the ability of the CHQ to serve its intended role.

As described in the previous alternative approach option, vehicles and heavy equipment would have to travel along the National Trails Highway and the IM-3 access road to access the Upland multiple times each day to support construction activities. Support trips would be more frequent, resulting in increased total travel time and traffic density for construction vehicles and increasing both traffic safety risk and potential public nuisance. Congestion in the primary work zones in the Uplands would increase risk to worker safety, decrease the practicality of the construction effort, and increase the overall construction schedule. All of these staging areas (3, 4, and 5) are also located on an existing dirt road, which would also require additional dust control. The GHG emissions would be greater than if areas 6, 7, and 13 were used because of the approximate 3-mile round-trip distance between the Upland and these staging areas, and the associated increase in trips by construction vehicles.

Option 3 – Use of Staging Areas Near I-40/Park Moabi Road Exit

Option 3 is to use the fenced staging area owned by Caltrans (staging area 10 in Figure 4.3-2) located south of the I-40/Park Moabi Road exit and the area north of the I-40/Park Moabi Road exit (staging area 9 in Figure 4.3-2). The Caltrans staging area has never been used by PG&E or PG&E’s contractors. Caltrans has used this staging area for work on I-40, and the availability of this area is subject to negotiations with Caltrans. This area was not originally intended for temporary facilities or as a support zone for construction in the Upland because it is not adjacent or central to the primary work zones in the Upland. Staging area 9 has been used for temporary equipment staging and as a parking area by various entities.

Vehicles and heavy equipment would have to travel along Park Moabi Road and National Trails Highway to access the Upland multiple times each day to support construction activities, resulting in increased total travel time and traffic density and leading to increased traffic safety risk and public nuisance. Using these areas may also increase traffic congestion at nearby I-40 on-ramps. Since the staging areas (9 and 10) are

located on a paved road, additional dust control would not be required. However, the GHG emissions would be greater than if staging areas 6, 7, 12, and 13 were used because of the approximately 2.4-mile round trip distance between the Upland and these staging areas and the increase in trips by construction vehicles.

Again, as mentioned previously, to adequately supply a primary work zone from distant staging areas also requires use of either more frequent or larger, higher-capacity support vehicles to deliver required construction materials. Primary work zones then become more congested due to either the larger quantity of smaller vehicles or having larger vehicles unloading their materials at the already tightly-constrained primary work zones. The support vehicles will thus be more likely to become backed up at the primary work zone, impacting traffic at and near the work area and potentially traffic on nearby public roads (such as National Trails Highway). Congestion in the primary work zones in the Upland would increase risk to worker safety, decrease the practicality of the construction effort, and increase the overall construction schedule.

Option 4 – Use of TCS evaporation ponds and Staging Areas In/Around TCS

Option 4 is to use a combination of the TCS evaporation ponds (staging area 11 in Figure 4.3-2) and the staging areas in/around TCS (staging areas 20 through 25 in Figure 4.3-2). A portion of the area west of the ponds will be used as a primary work zone and staging area for construction of remedy facilities at the ponds. The entire area around the ponds would not be available because PG&E would still require access to the ponds for use and maintenance. Similarly to Options 2 and 3, this area was not originally intended for temporary facilities or as a support zone for construction in the Upland because it is not adjacent or central to the primary work zone.

Vehicles and heavy equipment would have to travel from these staging areas along National Trails Highway, TCS entrance road, ponds access road, and IM-3 access road to access the primary work zones in the Upland multiple times each day to support construction activities, resulting in increased total travel time and traffic density and leading to increased traffic safety risk and public nuisance. Approximately ½ mile of the access road to the ponds is unpaved, so dust control mitigation measures would need to be employed. The frequency of maintenance of this road would also increase. GHG emissions would be greater than if Areas 6, 7, and 13 were used because of the approximate 3-mile round-trip distance between the primary work zone and these staging areas, the increase in trips, and the additional work required for dust control and road maintenance.

Again, as with the other options discussed above, adequately supplying a primary work zone from distant staging areas requires use of either more frequent or larger, higher-capacity support vehicles to deliver required construction materials. Primary work zones then become more congested due to either the larger quantity of smaller vehicles or having larger vehicles unloading their materials at the already tightly-constrained primary work zones. The support vehicles will thus be more likely to become backed up at the primary work zone, impacting traffic at and near the work area and potentially traffic on nearby public roads (such as National Trails Highway). Congestion in the primary work zones in the Upland would increase risk to worker safety, decrease the practicality of the construction effort, and increase the overall construction schedule.

Staging areas in and around TCS were also not proposed originally for temporary facilities or as a support zone for construction in the Upland because they were intended primarily for use as support zones for construction of remedial facilities at the TW Bench, inside the TCS, and along the access road to TCS. In addition, staging area 25 will house a temporary construction water storage and distribution system so interference with TCS operations is minimized.

3.3.2 Evaluation of Alternative Approach: IM-3 Decommissioning and Removal

This evaluation assumes staging **Areas 6 and 7** are not available and other identified staging areas shown in Figure 4.3-2 will be used during decommissioning and removal of IM-3. This evaluation is very similar in terms of rationale to that for Options 1 through 4 in Section 3.2.1, so for brevity it is not repeated here. In brief, this alternative would have similar adverse effects on worker safety, public safety and nuisance,

environmental impacts, and construction schedule duration as described above for the groundwater remedy construction and operation.

In addition, utilizing distant staging areas to support IM-3 decommissioning could delay the start of the IM-3 decommissioning effort. For example, using the remedy CHQ laydown area to support IM-3 decommissioning will require that laydown area to be completely cleared and available after completion of groundwater remedy construction. The time required to demobilize the CHQ laydown area prior to supporting IM-3 decommissioning will delay the start of IM-3 decommissioning.

3.4 Conclusion

All of the alternative approaches evaluated to avoid the use of the proposed Upland areas would have adverse effects on worker safety, public safety and nuisance, environmental impacts, and construction schedule duration that in PG&E's view would outweigh the benefits of eliminating those areas. Location of support zones for staging of construction-related equipment in close proximity to the actual construction activities is critical to PG&E's proposed approach for construction at the Topock site, and specifically in the Upland. This will allow for the safe and effective installation of all remedial facilities, as well as the subsequent decommissioning of IM-3, while protecting the surrounding sensitive resources, minimizing the overall construction footprint and use of undisturbed areas to the extent practicable, and minimizing the overall environmental impacts associated with the work activities.

PG&E and its contractors will fully comply with the project mitigation measures to avoid and protect sensitive resources, including workers sensitivity training. PG&E will not tolerate disrespectful behavior in the field and will remove staff, workers, or contractors who do not comply with site protocols.

4.0 References

California Department of Toxic Substances Control (DTSC). 2011. *Final Environmental Impact Report for the Topock Compressor Station Groundwater Remediation Project*. January 31.

_____. 2012. Settlement Agreement between the Fort Mojave Indian Tribe and DTSC, dated December 19, 2012.

CH2M HILL. 2007. *Programmatic Biological Assessment for Pacific Gas and Electric Company Topock Compressor Station Remedial and Investigative Actions.* January.

_____. 2014a. *Construction/Remedial Action Work Plan for the Final Groundwater Remedy, PG&E Topock Compressor Station, Needles, California.* Prepared for Pacific Gas & Electric Company. September 8.

_____. 2014b. *Basis of Design Report/Pre-Final (90%) Design Submittal for the Final Groundwater Remedy, PG&E Topock Compressor Station, Needles, California.* Prepared for Pacific Gas & Electric Company. September 8.

_____. 2014c. *Programmatic Biological Assessment for Pacific Gas and Electric Topock Compressor Station Final Groundwater Remedy*. April 28.

Hanes, Richard C. and Barry A. Price. 2014. *Cultural and Historical Property Treatment Plan for the Topock Compressor Station, Groundwater Remediation Project, San Bernardino County, California, and Mohave County, Arizona*. September.

Mead & Hunt, Inc. 2013. *Integrity Evaluation of National Old Trails Highway/U.S. Highway 66, CA-SBR-2910H in California AZ L:7:72 (ASM) and AZ I:15:156 (ASM) in Arizona; Topock Remediation Project San Bernardino County, California, Mohave County, Arizona*. September.

U.S. Department of the Interior (DOI) and California Department of Toxic Substances Control (DTSC). 2014a. Subject: Directives on Outstanding Issues of the Response to Basis of Design Report/Intermediate (60%) Comments for PG&E Topock Compressor Remediation Site. Letter from Aaron Yue/DTSC and Pamela Innis/DOI to Yvonne Meeks/PG&E. April 4.

U.S. Department of the Interior (DOI) and California Department of Toxic Substances Control (DTSC). 2014b. Subject: Directives on Outstanding Issues on the Pre-Final (90%) Basis of Design Supplemental Package for the PG&E Topock Compressor Station Remediation Site. Letter from Aaron Yue/DTSC and Pamela Innis/DOI to Yvonne Meeks/PG&E. December 23.

Tables

TABLE 1

Summary of Evaluation Results of Impacts to Remedy Construction Based on Areas 6, 7, 12, and 13 Availability as Staging Areas

Approach/Option	Scenario Description[1]	Estimated Periods of Staging Area Use (durations do not account for work that might be conducted concurrently or demobilization)	Estimated Impact on Worker and Public Safety	Estimated Impact on the Environment	Factors that Impact Estimated Project Schedule
Current Work Plan Approach	Fully utilize areas 6, 7, 12, and 13 as support zones (staging areas). In addition, most of staging area 6 will be used as primary work zones during the construction of wells IRL-1, MW-P, and MW-AA. **Staging areas are close to primary work zones.**	For use during construction of remedy infrastructure in the Upland area only. Major elements include: • Upland Area Wells – 19 months • Pipeline A – 10 months	Preferred option for worker and public safety due to: • Staging areas are located close to the Upland primary work zones. • Provides needed space to support construction activities in the Upland. • Minimizes risk to public safety and nuisance by avoiding increased construction vehicle traffic and potential congestion on public roads (e.g., National Trails Highway). • Minimizes risk to worker safety by avoiding congestion in the primary work zones in the Upland due to the need for more vehicles or larger (and slower) vehicles to support the Upland from distant staging areas.	This scenario minimizes environmental impact due to: • Use of these previously-disturbed areas allows for the most efficient construction while minimizing the total construction footprint. • Minimizes total construction duration and associated environmental impacts (dust, noise, water). • Minimizes the total vehicle traffic/ mileage required to complete the work and the associated greenhouse gas emissions, as well as the increase in dust and noise associated with execution of the work.	This scenario minimizes the total project duration due to: • Maximizes opportunities for conducting multiple construction activities simultaneously given adequate staging area space. • Minimizes inefficiencies associated with increased time required to access staging areas.
Alternative Approach Option 1	Utilize areas 14 and 18 in the vicinity of the MW-20 Bench as support zones in lieu of Upland staging areas 6, 7, 12, and 13. **Round-trip distance between staging areas and primary work zones is approx. 1 mile.**	For use during construction of remedy infrastructure in the vicinity of the Flood Plain and in the Upland area. Major elements include: • NTH IRZ and Flood Plain Area Wells – 15 months • Pipeline C – 17 months • Pipeline G – 10 months • MW-20 Bench Structures – 21 months • Upland Area Wells – 19 months • Pipeline A – 10 months	Scenario will complicate worker safety due to: • Over-crowding in staging areas 14 and 18 during overlap of major construction elements. • Increased vehicle and heavy equipment traffic (both mileage and number of trips) on National Trails Highway and IM-3 access road. Therefore, increased potential for vehicle-related accidents. • Increases risk to public safety and nuisance to the public due to increasing the density of construction vehicle traffic on public roads - increasing both trip frequency and trip duration for construction vehicles traveling between primary work zones and staging areas 14/18, and congestion on National Trails Highway, as larger construction vehicles are required to slowly enter and exit staging areas 14 and 18 at a greater frequency and for a greater duration over the remedy construction project. • Increases risk to worker safety by increased congestion in the primary work zones in the Upland due to the need for more vehicles or larger (and slower) vehicles to support the Upland from distant staging areas.	Increases environmental impact due to: • Increased greenhouse gas (GHG) emissions due to increase vehicle and equipment traffic. • Increased dust generation (and associated water usage for dust control) due to increase traffic along unpaved access pathways. • Increased noise generation due to increased vehicle traffic, over a longer duration of construction.	Project schedule duration would likely increase due to: • The MW-20 bench was intended primarily for use as a staging area/ support zone for construction of the NTH IRZ and the remedial facilities on the MW-20 Bench. Since these areas are already limited in size for their intended use, this scenario will severely limit the opportunities to conduct multiple construction activities simultaneously, which would result in a longer construction schedule, ultimately delaying the project goal of completing the groundwater remedy construction project and the decommissioning and removal of IM-3 at the earliest practical date. • Inefficiencies associated with increased time required to access staging areas. • Decreased practicality of construction due to congestion in the primary work zones in the Upland.

TABLE 1

Summary of Evaluation Results of Impacts to Remedy Construction Based on Areas 6, 7, 12, and 13 Availability as Staging Areas

Approach/Option	Scenario Description[1]	Estimated Periods of Staging Area Use (durations do not account for work that might be conducted concurrently or demobilization)	Estimated Impact on Worker and Public Safety	Estimated Impact on the Environment	Factors that Impact Estimated Project Schedule
Alternative Approach Option 2	Utilize staging areas 3, 4, and 5 in the vicinity of Moabi Regional Park in lieu of Upland staging areas 6, 7, 12, and 13. **Round-trip distance between staging areas and primary work zones is approx. 3 miles.**	These areas will be used during the construction of all remedy infrastructure.	Scenario will complicate worker safety due to: • Over-crowding in staging areas 3, 4, and 5 during overlap of major construction elements. • Increased vehicle and heavy equipment traffic (both mileage and number of trips) on National Trails Highway and IM-3 access road. Therefore, increased potential for vehicle-related accidents. • Increases risk to public safety and nuisance to the public due to increasing the density of construction vehicle traffic on public roads - increasing both trip frequency and trip duration for construction vehicles traveling between primary work zones and Moabi Regional Park, and congestion on National Trails Highway. • Increases risk to worker safety by increased congestion in the primary work zones in the Upland due to the need for more vehicles or larger (and slower) vehicles to support the Upland from distant staging areas.	Increases environmental impact due to: • Increased GHG emissions due to increase vehicle and equipment traffic. • Increased dust generation (and associated water usage for dust control) (particularly in the vicinity of Moabi Regional Park) due to increased traffic along unpaved access pathways, over a longer duration of construction. • Increased noise generation (particularly in the vicinity of Moabi Regional Park) due to increased vehicle traffic, over a longer duration of construction.	Project schedule duration would likely increase due to: • Staging areas 3, 4, and 5 were intended to support all construction activities. Since these areas are already limited in size for their intended use, this scenario will severely limit the opportunities to conduct multiple construction activities simultaneously, which would result in a longer construction schedule. • Specifically, Area 3 is already designated to serve as the Construction Headquarters and main temporary equipment and material laydown area. This area is meant to serve as the initial delivery or "check-in" area for materials or equipment, after which these materials are transferred to localized staging areas. This area was sized assuming that adequate staging areas are available near primary work zones. Using this area as a direct support zone for work in the Upland area will both impact work in the Upland area and reduce the ability of the CHQ to serve its intended role. • Inefficiencies associated with increased time required to access staging areas. • Decreased practicality of construction due to congestion in the primary work zones in the Upland.
Alternative Approach Option 3	Utilize staging areas 9 and 10 in the vicinity of the Interstate 40 access ramps in lieu of Upland staging areas 6, 7, 12, and 13. **Round-trip distance between staging areas and primary work zones is approx. 2.4 miles.** Note: Availability of staging area 10 is subject to negotiations with Caltrans.	These areas will be used during the construction of all remedy infrastructure.	Scenario will complicate worker safety due to: • Over-crowding in staging areas 9 and 10 during overlap of major construction elements. • Increased vehicle and heavy equipment traffic (both mileage and number of trips) on National Trails Highway, Park Moabi road, and IM-3 access road. Therefore, increased potential for vehicle-related accidents. • Increases risk to public safety and nuisance to the public due to increasing the density of construction vehicle traffic on public roads - increasing both trip frequency and trip duration for construction vehicles traveling between primary work zones and distant staging areas. • Increases risk to worker safety by increase congestion in the primary work zones in the Upland due to the need for more vehicles or larger (and slower) vehicles to support the Upland from distant staging areas.	Increases environmental impact due to: • Increased GHG emissions due to increase vehicle and equipment traffic. • Increased dust generation (and associated water usage for dust control) due to increase traffic along unpaved access pathways (particularly in the Upland). • Increased noise generation due to increased vehicle traffic over a longer duration of construction.	Project schedule duration would likely increase due to: • Staging areas 9 and 10 were intended to support all construction activities. Since these areas are already limited in size for their intended use, this scenario will limit the opportunities to conduct multiple construction activities simultaneously, which would result in a longer construction schedule. • Inefficiencies associated with increased time required to access staging areas. • Decreased practicality of construction due to congestion in the primary work zones in the Upland.

TABLE 1
Summary of Evaluation Results of Impacts to Remedy Construction Based on Areas 6, 7, 12, and 13 Availability as Staging Areas

Approach/Option	Scenario Description[1]	Estimated Periods of Staging Area Use (durations do not account for work that might be conducted concurrently or demobilization)	Estimated Impact on Worker and Public Safety	Estimated Impact on the Environment	Factors that Impact Estimated Project Schedule
Alternative Approach Option 4	Utilize staging areas 11 and 20 through 25 in the vicinity of the Topock Compressor Station (TCS) and associated evaporation ponds in lieu of Upland staging areas 6, 7, 12, and 13. **Round-trip distance between staging areas and primary work zones is approx. 3 miles.**	For use during construction of remedy infrastructure in the vicinity of the Flood Plain and in the Upland area. Major elements include: • TW Bench Wells – 3 months • Bat Cave Wash Area Wells – 7 months • TCS Area Wells – 2 months • East Ravine Area Wells – 7 months • A portion of Pipeline B – less than 9 months • Pipeline D – 3 months • Pipeline E – 4 months • Pipeline F – 10 months • Pipeline J – 3 months • Pipeline I – 11 months • Pipeline L – 5 months • Pipeline M – 8 months • Pipeline N – 2-3 months • TW Bench Structures –23 months • TCS Structures – 48 months	Scenario will complicate worker safety due to: • Increase activities in and around the operating TCS. • Over-crowding in Staging areas 11 and 20 through 25 during overlap of major construction elements. • Increased vehicle and heavy equipment traffic (both mileage and number of trips) on National Trails Highway, TCS entrance road, ponds access road, and IM-3 access road. Therefore, increased potential for vehicle-related accidents. • Increases risk to public safety and nuisance to the public due to increasing the density of construction vehicle traffic on public roads – increasing both trip frequency and trip duration for construction vehicles traveling between primary work zones and distant staging areas. • Increases risk to worker safety by increase congestion in the primary work zones in the Upland due to the need for more vehicles or larger (and slower) vehicles to support the Upland from distant staging areas.	Increases environmental impact due to: • Increased GHG emissions due to increase vehicle and equipment traffic. • Increased dust generation (and associated water usage for dust control) due to increase traffic along unpaved access pathways (particularly in the Upland). • Increased noise generation due to increased vehicle traffic over a longer duration of construction.	Project schedule duration would likely increase due to: • Staging areas in/around TCS were intended primarily for use as staging areas/support zones for construction of remedial facilities at the TW Bench, inside the TCS, and along the access road to TCS. Due to the limited space available for construction staging in/near the TCS this scenario will limit the opportunities to conduct multiple construction activities simultaneously, which would result in a longer construction schedule. • Inefficiencies associated with increased time required to access staging areas. • Decreased practicality of construction due to congestion in the primary work zones in the Upland.

Note:
[1] See Section 1.0 for definitions of the terms primary work zone (construction area) and support zone (staging area).

TABLE 2
Summary of Evaluation Results of Impacts to IM-3 Decommissioning and Removal Based on Areas 6 and 7 Availability as Staging Areas

Approach/Option[1]	Scenario Description[2]	Estimated Periods of Staging Area Use (durations do not account for work that might be conducted concurrently or demobilization)	Estimated Impact on Worker Safety	Estimated Impact on the Environmental	Factors that Impact Estimated Project Schedule
Current Work Plan Approach	Fully utilize areas 6 and 7 as staging areas. **Staging areas are in close proximity to the primary work zones.**	For use during decommissioning and removal of IM-3. Major elements include: • IM-3 Treatment Plant – 12 months • IM Facilities on MW-20 Bench and Extraction Wells – 12 months • Injection Well Field and Conveyance Piping/Conduits – 6 months • Punch List/Demobilization – 6 months	Preferred option for worker safety due to: • Staging areas are located close to the Upland primary work zones. • Provides adequate space to support decommissioning activities in the Upland.	This scenario minimizes environmental impact due to: • Use of these previously disturbed areas allows for the most efficient construction while minimizing the total construction footprint. • Minimizes total construction duration and associated environmental impacts. • Minimizes the total vehicle traffic/ mileage required to complete the work and the associated greenhouse gas emissions, as well as increases in dust generation (and associated water usage for dust control) and noise associated with execution of the work. An increase in water for dust control will be required.	This scenario minimizes the total project duration due to: • Maximizes opportunities for conducting multiple construction activities simultaneously given adequate staging area space. • Minimizes inefficiencies associated with increased time required to access staging areas.

Notes:
[1] The evaluation for the Alternative Approach for IM-3 decommissioning and removal (staging areas 6 and 7 unavailable, with other staging areas used instead) is very similar in terms of rationale to that for alternative remedy construction approach Options 1 through 4 summarized in Table 1, so for brevity it is not repeated here. In brief, this alternative would have similar adverse effects on worker safety, public safety and nuisance, environmental impacts, and construction schedule duration as described for Options 1 through 4 in Table 1.
[2] See Section 1.0 for definitions of the terms primary work zone (construction area) and support zone (staging area).

Exhibit and Figures

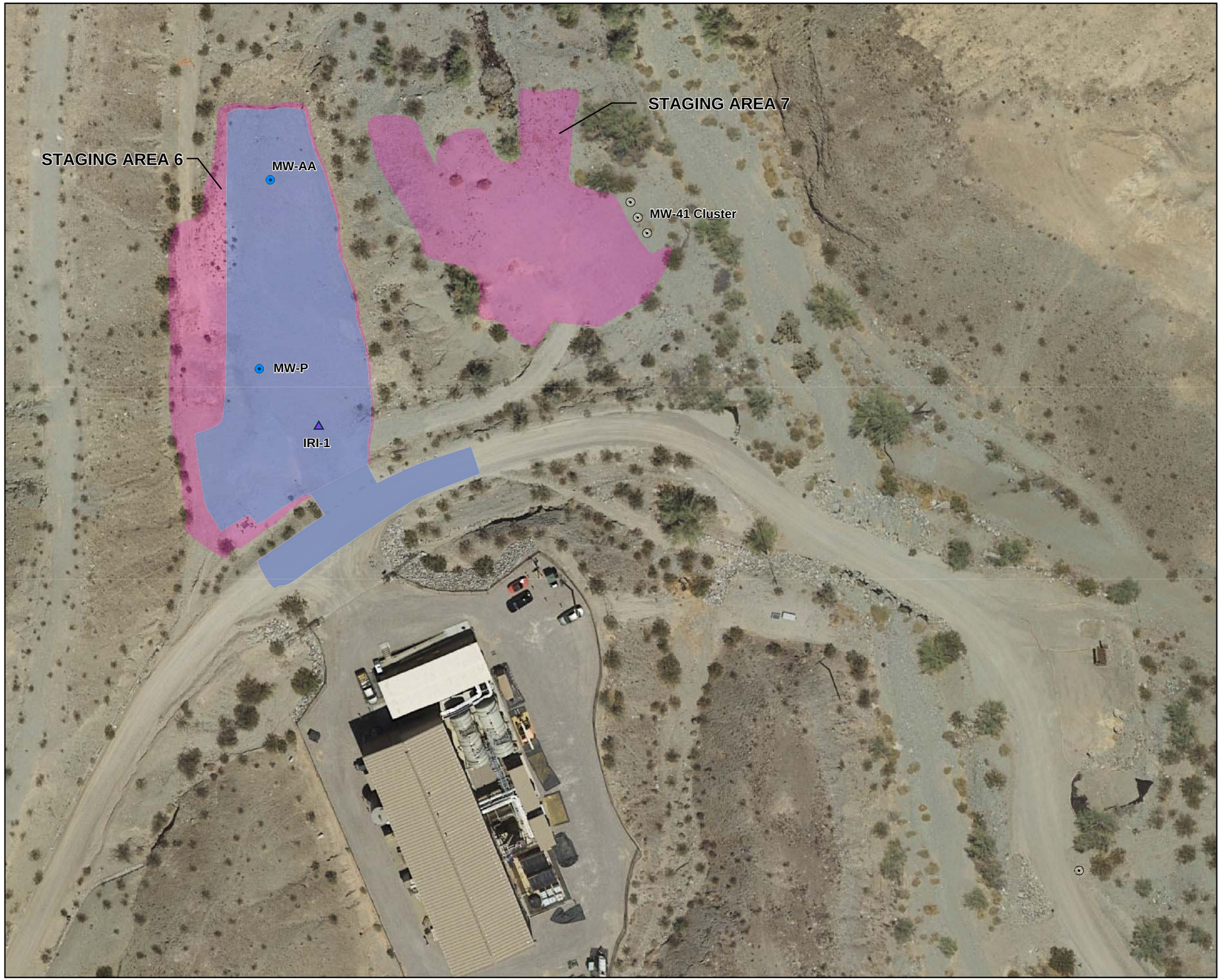

VICINITY MAP

LEGEND

Existing Wells:

- Monitoring Well

Planned Remedy Wells:

- Injection, Inner Recirculation Loop
- Monitoring Well
- Staging Areas 6 and 7
- Estimated Primary Work Zone for Construction of Wells Located in Staging Area 6

Note: Areas shown are for discussion only (December 2014).

N

0 30 60
Feet

EXHIBIT 1
PLANNED USE OF STAGING AREAS 6 AND 7 DURING REMEDY CONSTRUCTION
IM3 RECOMMISSIONING, REMOVAL, AND RESTORATION WORK PLAN
PG&E TOPOCK COMPRESSOR STATION
NEEDLES, CALFORNIA

CH2MHILL.

UNK \\ZINFANDEL\PROJ\PACIFICGASELECTRICCO\TOPOCKPROGRAM\GIS\MAPFILES\2014\EC_WORKING\TEMPLATEBLANK11X17.MXD ECLARK1 12/15/2014 10:34:46 AM
ES121514123106BAO_Ex_1_Topock_StagingAreas_6-7.ai_012615_lho

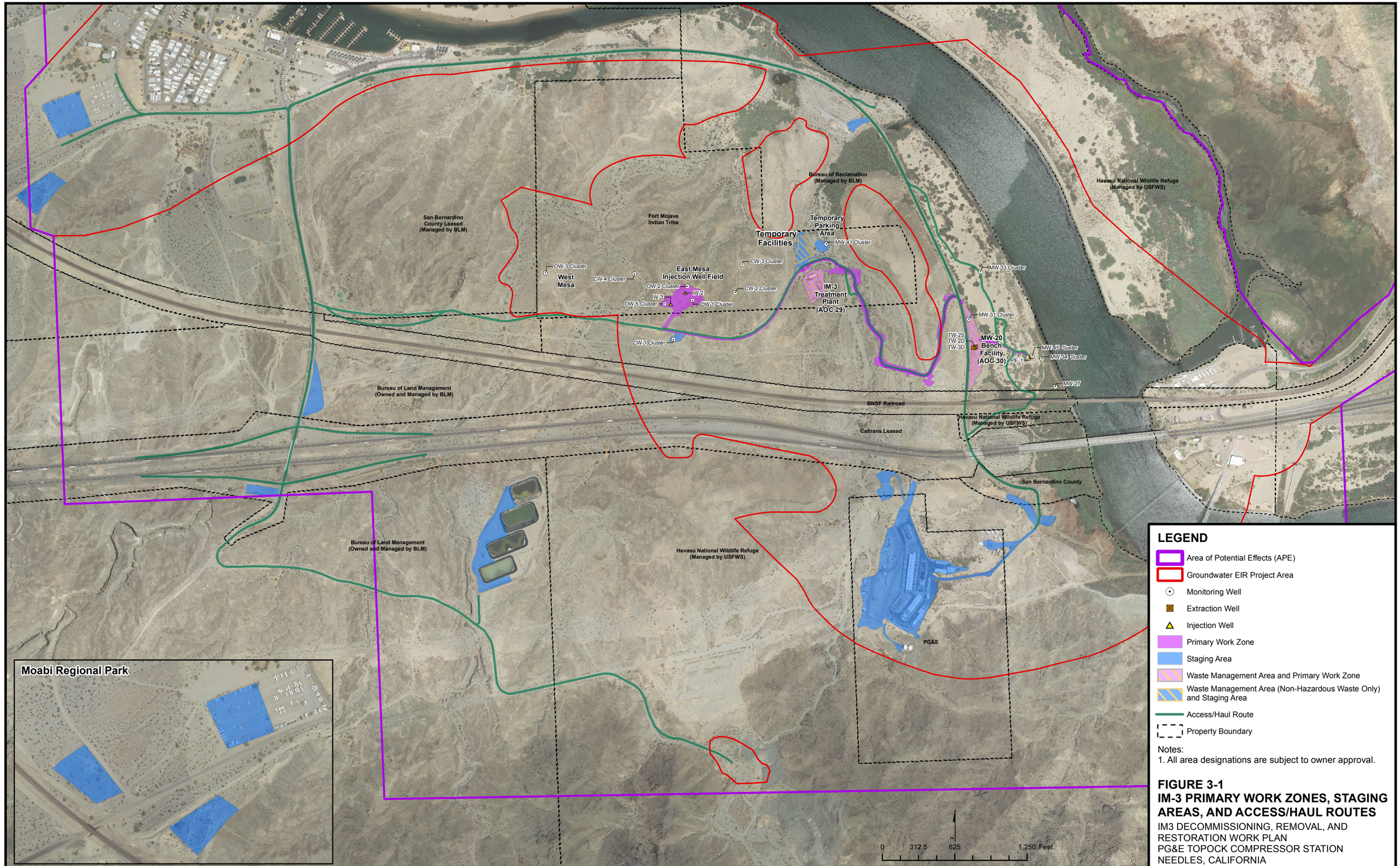

LEGEND

- Area of Potential Effects (APE)
- Groundwater EIR Project Area
- Monitoring Well
- Extraction Well
- Injection Well
- Primary Work Zone
- Staging Area
- Waste Management Area and Primary Work Zone
- Waste Management Area (Non-Hazardous Waste Only) and Staging Area
- Access/Haul Route
- Property Boundary

Notes:
1. All area designations are subject to owner approval.

FIGURE 3-1
IM-3 PRIMARY WORK ZONES, STAGING AREAS, AND ACCESS/HAUL ROUTES

IM3 DECOMMISSIONING, REMOVAL, AND RESTORATION WORK PLAN
PG&E TOPOCK COMPRESSOR STATION
NEEDLES, CALIFORNIA

CH2MHILL

Path: \\chfsfandel\proj\PacificGasElectricCo\TopockProgram\GIS\MapFiles\2014\IM3_Decom\WorkZones_StagingAreas_Routes.mxd Date Saved: 9/8/2014 10:42:36 AM

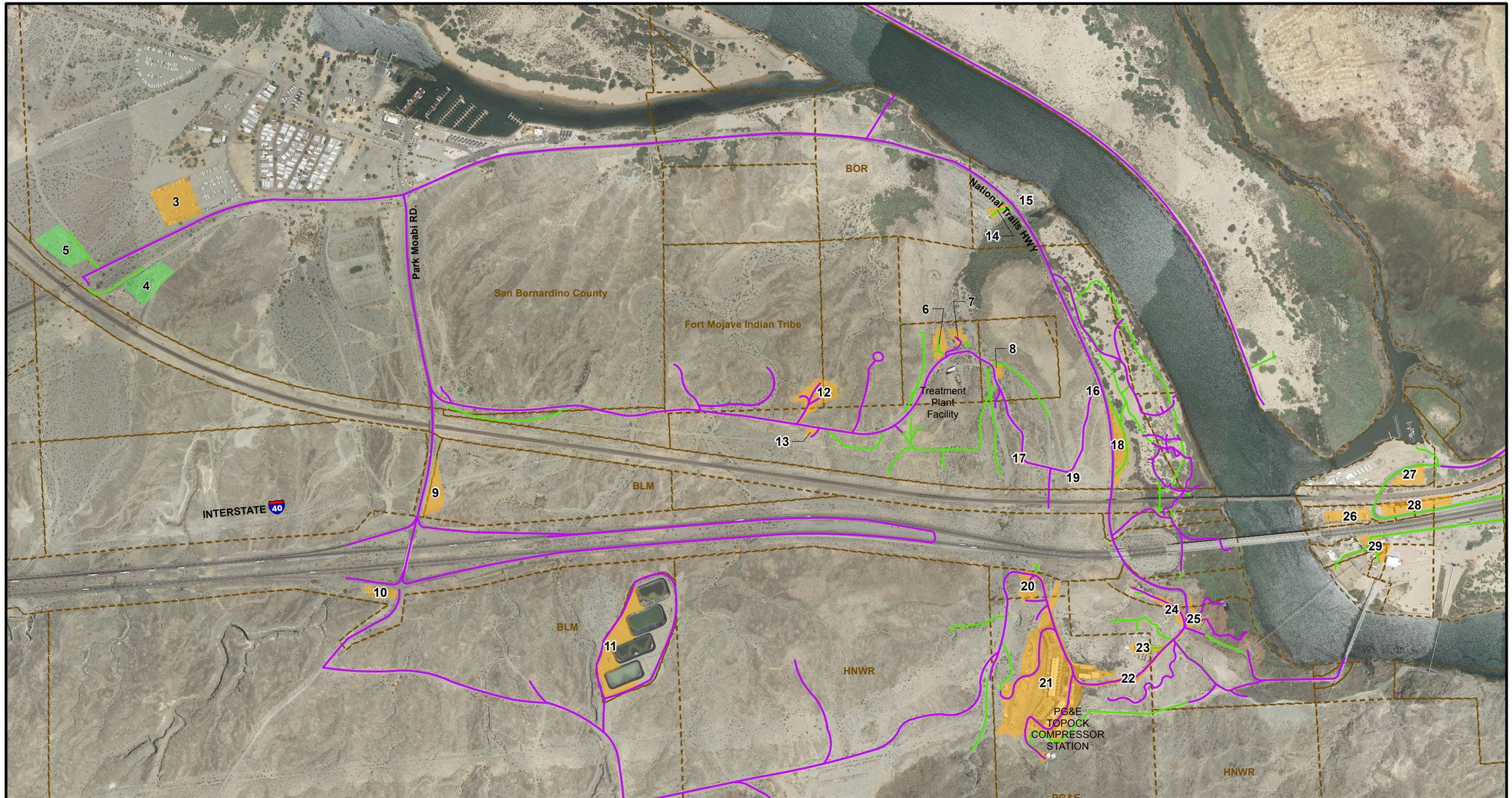

LEGEND

- Existing Access Route
- New Remedy Access Route
- Potential Soil Processing and Storage Areas for Remediation Project
- Proposed Staging Areas for Remediation Project

Notes:

1. Area 3 (CHQ) will be used as the primary truck inspection area. Areas #9, #18, and #23 or other staging areas might also be used depending on the specific construction activity.
2. Decontamination pads will be located in Area #3 (Construction Headquarters), Area #21 (Topock Compressor Station), and Area #23 (Transwestern Bench).
3. Areas #15, 16, 17, and 19 will not be used as staging areas. Areas #16, 17, and 19 may be part of the primary work zones for remedy infrastructure along the access road.

N

0 780
Feet

FIGURE 4.2-3
CONSTRUCTION SITE PLAN AND ACCESS ROUTES
GROUNDWATER REMEDY CONSTRUCTION/ REMEDIAL ACTION WORK PLAN
PG&E TOPOCK COMPRESSOR STATION
NEEDLES, CALIFORNIA

CH2MHILL

Path: \\Zinfandel\proj\PacificGasElectricCo\TopockProgram\GIS\MapFiles\2014\CRAWP\FIG423_AccessRoutes_CA.mxd Date Saved: 9/7/2014 4:10:27 PM